IN THE UNITED STATES DISTRICT COURT
FOR THE DISTRICT OF DELAWARE

RATES TECHNOLOGY INC., Plaintiff, v. PRIMUS TELECOMMUNICATIONS, INC., and PRIMUS TELECOMMUNICATIONS GROUP, INC., Defendants.	:	Civil Action No. _____ **JURY TRIAL REQUESTED**

COMPLAINT FOR PATENT INFRINGEMENT

Plaintiff Rates Technology Inc. ("RTI") alleges as follows:

1. RTI is a corporation duly organized pursuant to the laws of the State of Delaware, having its principal place of business at 50 Route 111, Suite 210, Smithtown, NY 11787.

2. Upon information and belief, defendants Primus Telecommunications, Inc. and Primus Telecommunications Group, Inc. (collectively, "Primus") a re c orporations organized pursuant to the laws of the State of Delaware, both with a regular and established place of business at 7901 Jones Branch Drive, Suite 900, McLean, Virginia 22102.

3. This case is an action for patent infringement arising under the Patent Laws of the United States, as set forth in 35 U.S.C. §§271 and 280 through 285.

4. This Court has jurisdiction over the subject matter of this action under 28 U.S.C. §§1331, 1332(a)(1), 1332(c)(1) and 1338(a).

5. Venue is proper before this Court under 28 U.S.C. §§1391(a), 1391(c) and 1400(b).

FIRST CAUSE OF ACTION FOR PATENT INFRINGEMENT

6. RTI repeats and realleges the allegations contained in paragraphs 1 through 5 above, inclusive, as if fully repeated and restated herein.

7. The United States government has duly and legally issued United States Patent number 5,425,085 (the " '085 Patent"), for inventions relating to the routing of telephone calls based upon cost. A copy of the '085 Patent is attached as Exhibit "A", and the '085 Patent remains valid and enforceable.

8. At all relevant times, RTI has been the lawful owner of the '085 Patent, and has had the right to sue and to recover for any and all infringement(s) of such patent.

9. Upon information and belief, within the past six years, Primus has infringed, actively induced the infringement of, and/or contributorily infringed the '085 Patent within the United States, including without limitation through advertising, marketing, selling, and/or offering to sell its Lingo VoIP services and other similar services, and products and equipment to support such services for use by itself and its customers, and other VoIP services and related technologies and products to facilitate such services and technologies, in order to offer traditional voice telephony services across its VoIP platform and to enhance end user customers' voice and data networking ability, and which infringe the '085 Patent (all collectively, the "Infringing '085 Products and Services"). RTI has a reasonable basis for making the allegations contained in this paragraph, and believes they are likely to have evidentiary support after a reasonable opportunity for further investigation or discovery. *Hoffman-La Roche Inc. v. Invamed Inc.*, 213 F.3d 1359, 1364 (Fed. Cir. 2000); *Cambridge Prods. Ltd. v. Penn Nutrients, Inc.*, 962 F.2d 1048, 1050 (Fed. Cir. 1992).

10. Upon information and belief, Primus has therefore infringed, actively induced the infringement of and/or contributorily infringed the '085 Patent within the United States by advertising, marketing, selling, and/or offering to sell such infringing products and services; and that its infringement, active inducement of infringement and/or contributory infringement of the

'085 Patent has been willful and will continue unless rectified by the Court. RTI has a reasonable basis for making the allegations contained in this paragraph, and believes they are likely to have evidentiary support after a reasonable opportunity for further investigation or discovery. *Hoff-man-La Roche, supra*, 213 F.3d at 1364; *Cambridge, supra*, 962 F.2d at 1050.

11. Upon information and belief, RTI has been substantially damaged by Primus's infringing activities, and Primus is liable for such damages, in an amount not known at this time. RTI has a reasonable basis for making the allegations contained in this paragraph, and believes they are likely to have evidentiary support after a reasonable opportunity for further investigation or discovery. *Hoffman-La Roche, supra*, 213 F.3d at 1364; *Cambridge, supra*, 962 F.2d at 1050.

12. Primus's wrongful acts have damaged and will continue to damage RTI irreparably, and RTI has no adequate remedy at law for those wrongs and injuries. The damage to RTI includes harm to it and its products' goodwill and reputation in the marketplace that money cannot compensate. In addition to its actual damages, RTI is therefore entitled to a preliminary and permanent injunction restraining and enjoining Primus and its agents, servants and employees, and all persons acting thereunder, in concert with, or on their behalf, from infringing the '085 Patent, including without limitation restraining and enjoining the advertising, marketing, selling, and/or offering to sell the Infringing '085 Products and Services within the United States, which infringe the '085 Patent. RTI has a reasonable basis for making the allegations contained in this paragraph, and believes they are likely to have evidentiary support after a reasonable opportunity for further investigation or discovery. *Hoffman-La Roche, supra*, 213 F.3d at 1364; *Cambridge, supra*, 962 F.2d at 1050.

13. RTI discussed with and gave Primus notice of its infringement and tried to resolve this matter without litigation, but Primus refused to do so, thereby forcing RTI to file this suit.

SECOND CAUSE OF ACTION FOR PATENT INFRINGEMENT

14. RTI repeats and realleges the allegations contained in paragraphs 1 through 13 above, inclusive, as if fully repeated and restated herein.

15. The United States Government has also duly and legally issued United States Patent Number 5,519,769 (the " '769 Patent"), for inventions relating to a method for updating a database in a telephone call routing system. A copy of the '769 Patent is attached as Exhibit "B", and the '769 Patent remains valid and enforceable.

16. At all relevant times, RTI has been the lawful owner of the '769 Patent, and has had the right to sue and to recover for any and all infringement(s) of such patent.

17. Upon information and belief, Primus has infringed, actively induced the infringement of, and/or contributorily infringed the '769 Patent within the United States, including without limitation through advertising, marketing, selling, and/or offering to sell its Lingo VoIP services and other similar services, and products and equipment to support such services for use by itself and its customers, and other VoIP services and related technologies and products to facilitate such services and technologies, in order to offer traditional voice telephony services across its VoIP platform and to enhance end user customers' voice and data networking ability, and which infringe the '769 Patent (all collectively, the "Infringing '769 Products and Services"). RTI has a reasonable basis for making the allegations contained in this paragraph, and believes they are likely to have evidentiary support after a reasonable opportunity for further investigation or discovery. *Hoffman-La Roche, supra*, 213 F.3d at 1364; *Cambridge, supra*, 962 F.2d at 1050.

18. Upon information and belief, Primus has therefore infringed, actively induced the infringement of and/or contributorily infringed the '769 Patent within the United States by advertising, marketing, selling and/or offering for sale infringing products, services, and technologies; and that its infringement, active inducement of infringement and/or contributory infringement of the '769 Patent has been willful and will continue unless rectified by this Court. RTI has a reasonable basis for making the allegations contained in this paragraph, and believes they are likely to have evidentiary support after a reasonable opportunity for further investigation or discovery. *Hoffman-La Roche, supra*, 213 F.3d at 1364; *Cambridge, supra*, 962 F.2d at 1050.

19. Upon information and belief, RTI has been substantially damaged by the infringing activities of defendants, and Primus is liable for such damages, in an amount not known at this

time. RTI has a reasonable basis for making the allegations contained in this paragraph, and believes they are likely to have evidentiary support after a reasonable opportunity for further investigation or discovery. *Hoffman-La Roche, supra*, 213 F.3d at 1364; *Cambridge, supra*, 962 F.2d at 1050.

20. Primus's wrongful acts have damaged and will continue to damage RTI irreparably, and RTI has no adequate remedy at law for those wrongs and injuries. The damage to RTI includes harm to it and its products' goodwill and reputation in the marketplace that money cannot compensate. In addition to its actual damages, RTI is therefore entitled to a preliminary and permanent injunction restraining and enjoining Primus and its agents, servants and employees, and all persons acting thereunder, in concert with, or on their behalf, from infringing the '769 Patent, including without limitation restraining and enjoining the advertising, marketing, selling, and/or offering to sell the Infringing '769 Products and Services within the United States, which infringe the '769 Patent. RTI has a reasonable basis for making the allegations contained in this paragraph, and believes they are likely to have evidentiary support after a reasonable opportunity for further investigation or discovery. *Hoffman-La Roche, supra*, 213 F.3d at 1364; *Cambridge, supra*, 962 F.2d at 1050.

21. As noted above, RTI discussed with and gave Primus notice of its infringement, and tried to resolve this matter without litigation, but Primus refused to do so. Thus, Primus forced RTI to file this lawsuit.

PRAYER FOR RELIEF

WHEREFORE, RTI prays for judgment against Primus, as follows:

1. That the '085 Patent be determined enforceable for its life and duration;
2. That the '769 Patent be determined enforceable for its life and duration;
3. That Primus has willfully infringed, actively induced the infringement of and/or knowingly contributorily infringed the '085 and '769 Patents;
4. That an accounting be had for the damages caused RTI by Primus's infringing activities, and that such damages including damages for lost profits and/or a

reasonable royalty in an amount not known at this time, which amount should be trebled under 35 U.S.C. §284, with interest, be awarded to RTI;

5. That RTI be granted preliminary and permanent injunctive relief restraining and enjoining Primus and its agents, servants and employees, and all persons acting thereunder, in concert with, or on their behalf, from infringing the '085 and '769 Patents, including without limitation restraining and enjoining the advertising, marketing, selling, and/or offering to sell the Infringing '085 Products and Services and the Infringing '769 Products and Services within the United States, which infringe RTI's '085 and '769 Patents;

6. That RTI be granted further injunctive relief directing Primus to recall all examples of the Infringing '085 Products and Services and of the Infringing '769 Products and Services which it has sold within the United States, which infringe the '085 and '769 Patents, to the extent possible; and to provide RTI with names and contact information for all persons who purchased any of the Infringing '085 Products and Services and of the Infringing '769 Products and Services within the United States, for which such recall is not possible, and to notify each such person that such products and services have been found to be illegal and infringing;

7. That RTI be awarded its attorney fees, costs and expenses, under 35 U.S.C. §285;

8. That RTI be awarded such further necessary and proper relief as the Court may deem equitable and just.

///

///

///

JURY TRIAL DEMANDED

RTI hereby demands a trial by jury of all issues so triable.

Dated: July 16, 2007.

By: _____
Mary B. Matterer (#2696)
MORRIS JAMES LLP
500 Delaware Avenue, Suite 1500
Wilmington, Delaware 19801
302.888.6800
mmatterer@morrisjames.com

OF COUNSEL:

James B. Hicks
HICKS | PARK LLP
824 Wilshire Blvd., Suite 300
Los Angeles, California 90017
Tel.: (213) 612-0007
jhicks@hicksparklaw.com

Attorneys for Plaintiff
RATES TECHNOLOGY INC.

US005425085A

United States Patent [19]

Weinberger et al.

[11] **Patent Number: 5,425,085**

[45] **Date of Patent: Jun. 13, 1995**

[54] **LEAST COST ROUTING DEVICE FOR SEPARATE CONNECTION INTO PHONE LINE**

[75] Inventors: **Gerald J. Weinberger**, Smithtown; **Roger C. Lee**, Wading River, both of N.Y.

[73] Assignee: **Rates Technology Inc.**, Smithtown, N.Y.

[21] Appl. No.: **210,670**

[22] Filed: **Mar. 18, 1994**

[51] **Int. Cl.**[6] **H04M 15/00**; H04M 7/00

[52] **U.S. Cl.** **379/112**; 379/111; 379/113; 379/114; 379/116; 379/130; 379/131; 379/219; 379/220; 379/221

[58] **Field of Search** 379/111–116, 379/130–132, 219–221

[56] **References Cited**

U.S. PATENT DOCUMENTS

4,122,308	10/1978	Weinberger et al.	379/112
4,136,262	1/1979	Clark, Jr.	379/143
4,198,545	4/1980	Haist et al.	379/113
4,209,668	6/1980	Weinberger et al.	379/114
4,410,765	10/1983	Hestad	379/112
4,585,904	4/1986	Mincone	379/131
4,656,657	4/1987	Hunsicker	379/131
4,751,729	6/1988	Treat	379/113
4,813,065	3/1989	Segala	379/112
4,888,822	12/1989	Weinberger et al.	379/130
4,935,956	6/1990	Hellwarth	379/114
5,163,042	11/1992	Ochiai	379/220

Primary Examiner—Stephen Chin
Assistant Examiner—Vijay Shankar
Attorney, Agent, or Firm—James & Franklin; Harold James; Robert L. Epstein

[57] **ABSTRACT**

A device interconnects within the phone line coming from a first phone and routes telephone calls along a least cost route originating from the first telephone to a second telephone via the network. A housing forms an enclosure and has a first jack for interconnection to the phone side of the phone line and a second jack for interconnection to the network side of the phone line. The housing forms an enclosure which includes a switch for disconnecting the first phone from the network. The device generates a source of current through the switch to the first phone corresponding to the amount of current provided by the phone network. A database stores billing rate parameters for determining various communication paths of different carriers based on parameters such as the time and date of the call. Phone calls from the first phone are detected and stored. The database is addressed and a plurality of communication switch paths are identified as well as the cost rate of each path. The cost rates for each identified path are compared to determine a least cost route for the call. The device generates a number sequence corresponding to a desired carrier so that the dialed call is routed through the second jack and phone line to the selected communication path and carrier so as to establish a switched connection between the first and second phones.

26 Claims, 6 Drawing Sheets

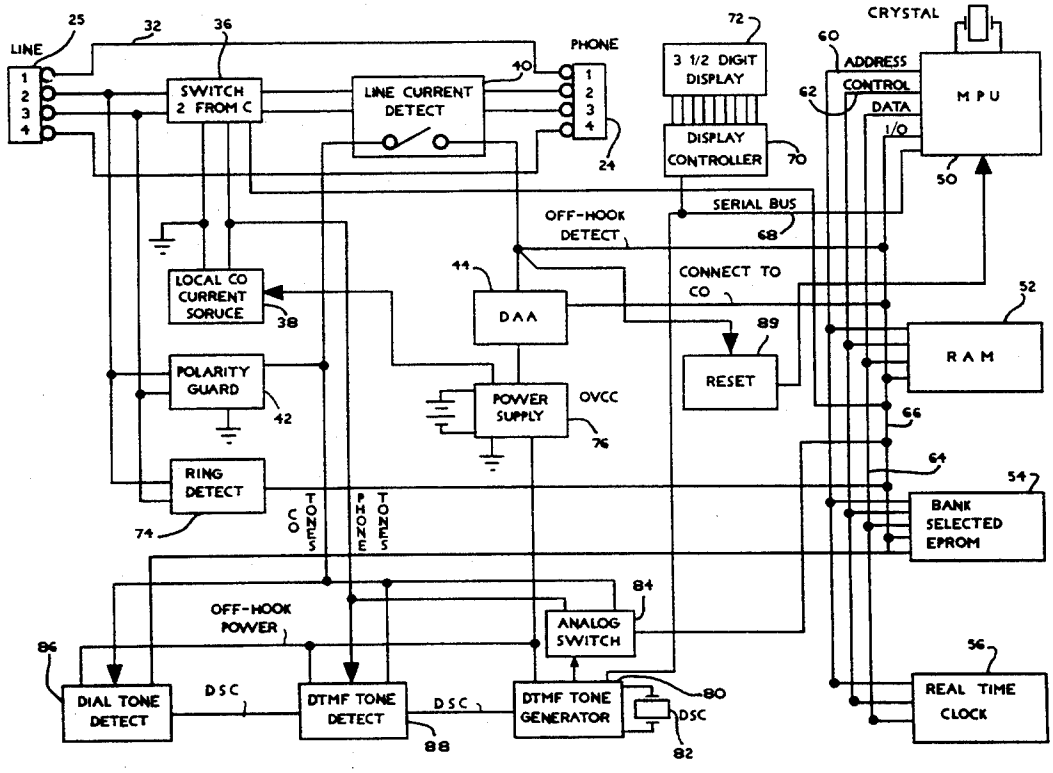

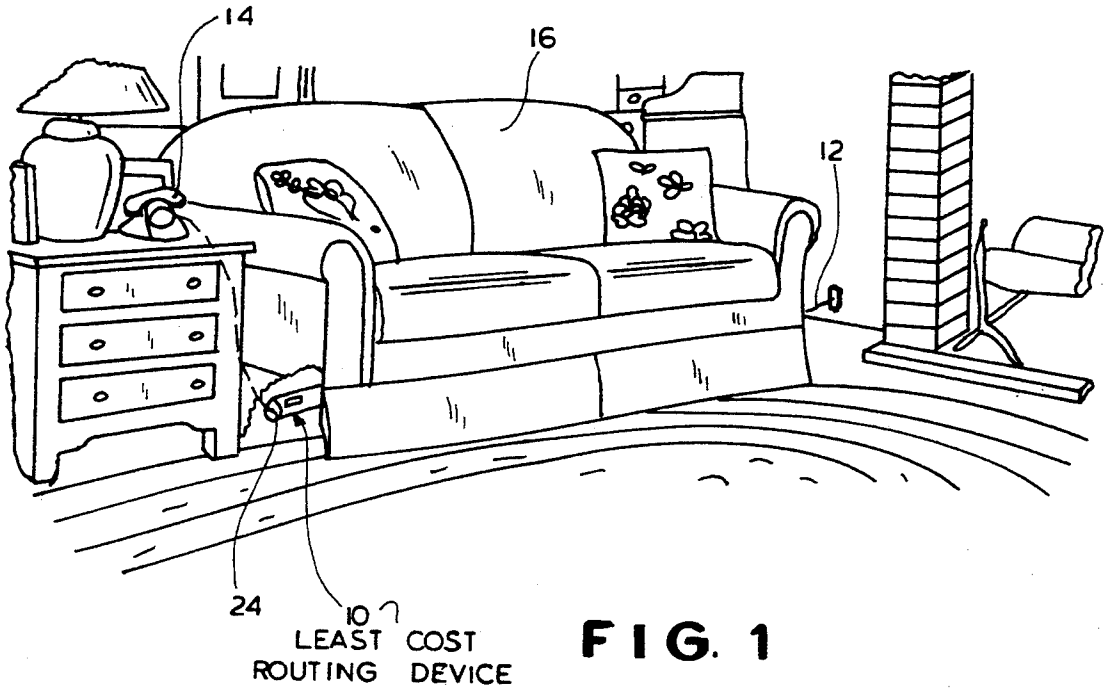
14
16
12
24
10
LEAST COST
ROUTING DEVICE

FIG. 1

FIG. 7

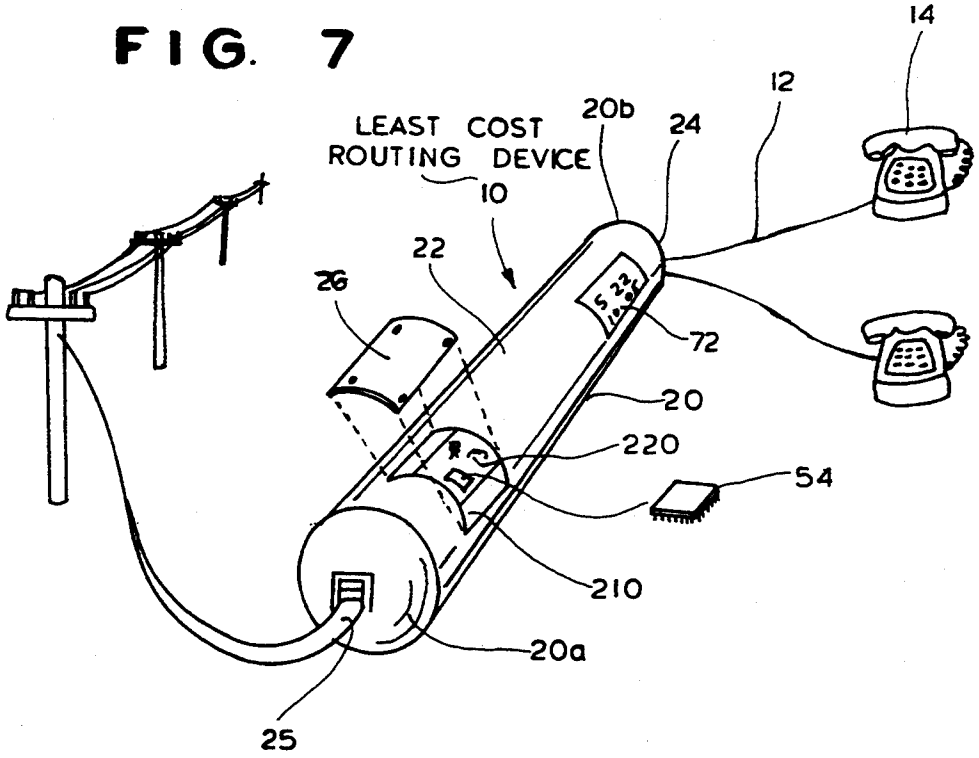
14
12
LEAST COST
ROUTING DEVICE
10
20b
24
22
26
72
20
220
54
210
20a
25

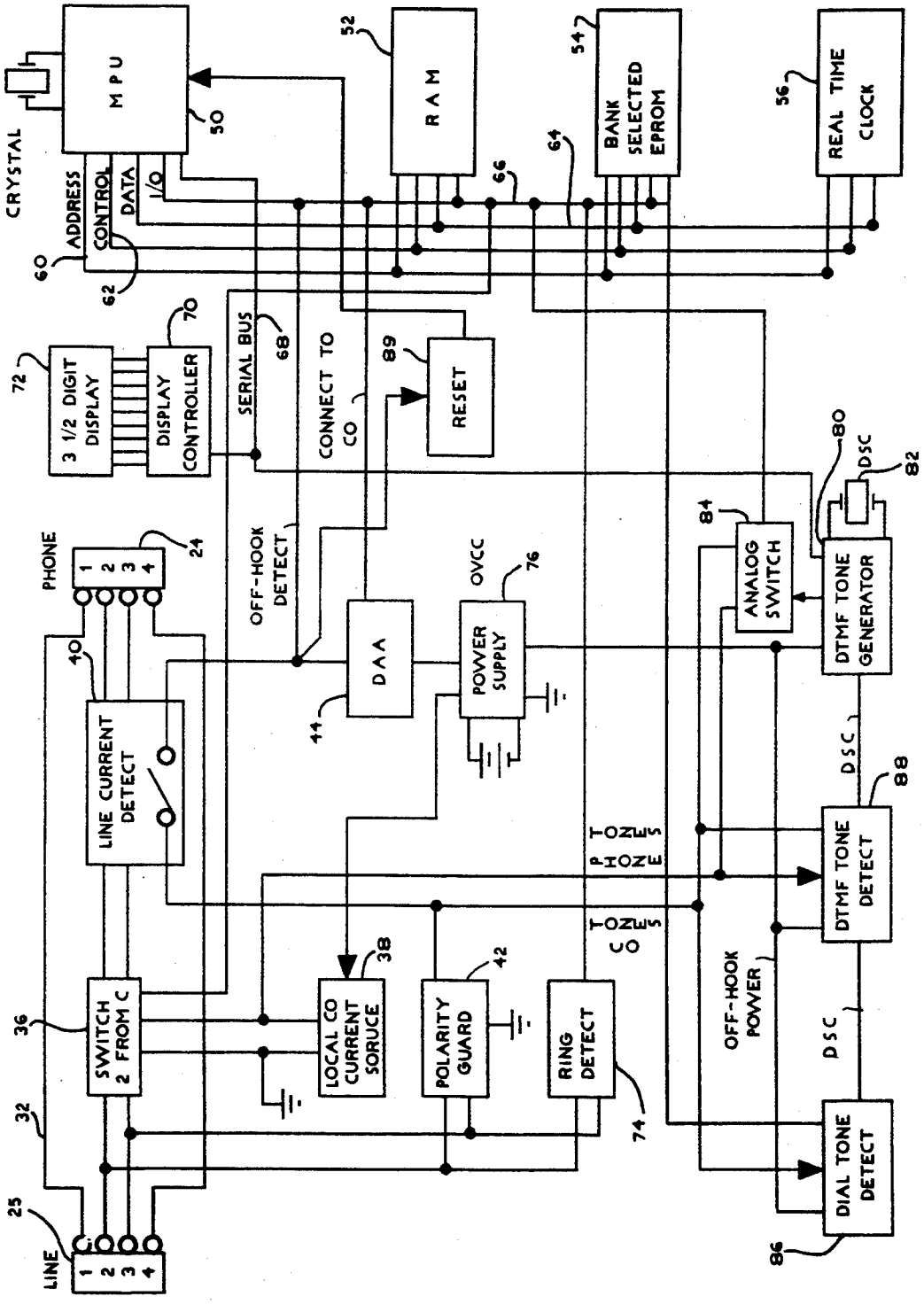
MPU
50
CRYSTAL
ADDRESS
CONTROL
DATA
I/O
60
62
RAM
52
BANK SELECTED EPROM
54
REAL TIME CLOCK
56
64
66
SERIAL BUS
68
DISPLAY CONTROLLER
70
3 1/2 DIGIT DISPLAY
72
CONNECT TO CO
RESET
89
PHONE
1 2 3 4
24
40
OFF-HOOK DETECT
DAA
41
OVCC
POWER SUPPLY
76
ANALOG SWITCH
84
DTMF TONE GENERATOR
80
DSC
82
LINE CURRENT DETECT
DSC
88
DTMF TONE DETECT
PHONE TONES
CO TONES
SWITCH 2 FROM C
36
32
LOCAL CO CURRENT SORUCE
38
POLARITY GUARD
42
RING DETECT
74
OFF-HOOK POWER
DSC
DIAL TONE DETECT
86
LINE
25
1 2 3 4

FIG. 2

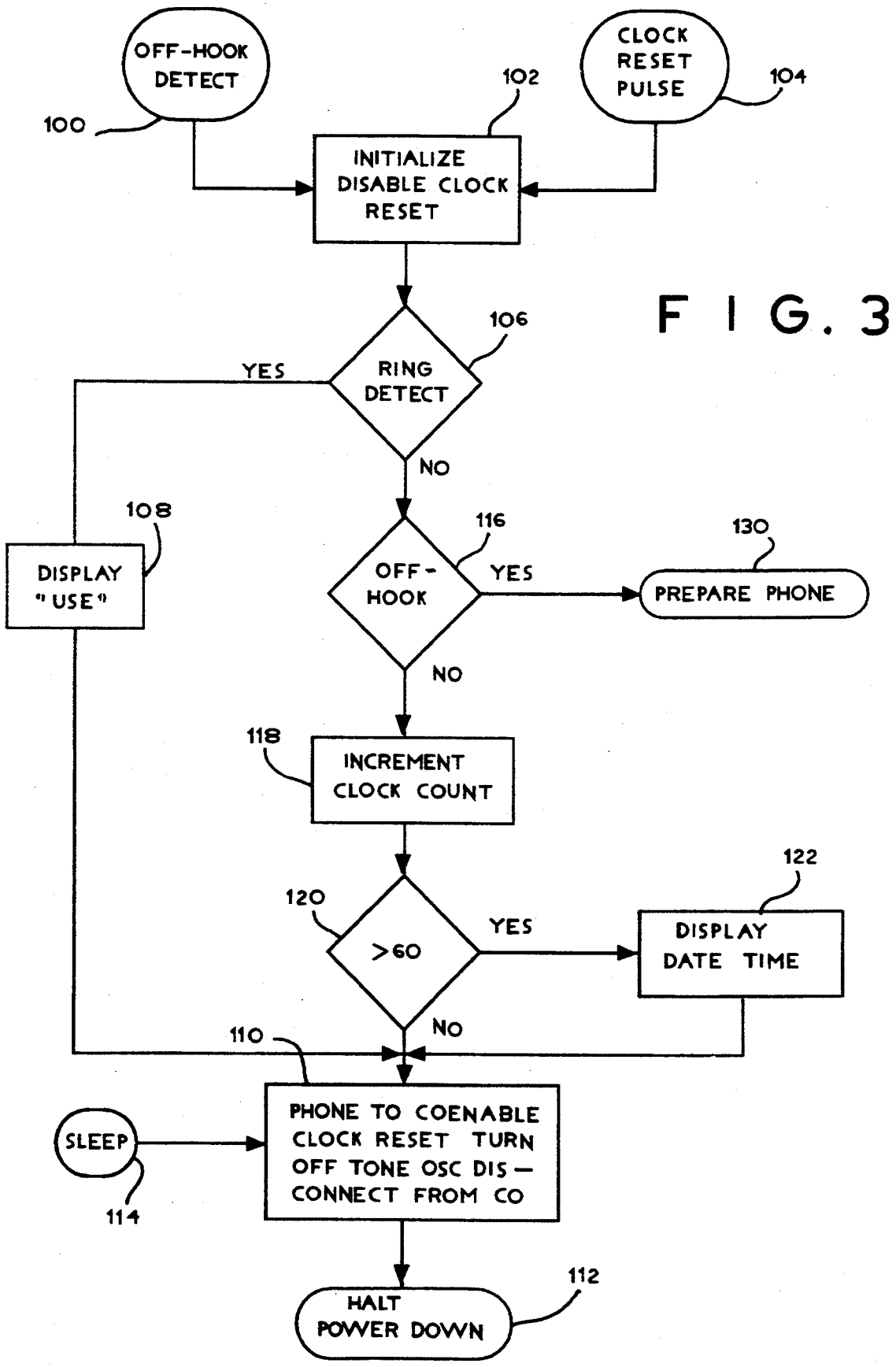
OFF-HOOK DETECT
100
CLOCK RESET PULSE
104
102
INITIALIZE DISABLE CLOCK RESET
106
RING DETECT
YES
NO
108
DISPLAY "USE"
116
OFF-HOOK
YES
130
PREPARE PHONE
NO
118
INCREMENT CLOCK COUNT
122
120
>60
YES
DISPLAY DATE TIME
NO
110
SLEEP
114
PHONE TO COENABLE CLOCK RESET TURN OFF TONE OSC DIS— CONNECT FROM CO
112
HALT POWER DOWN

FIG. 3

FIG. 4

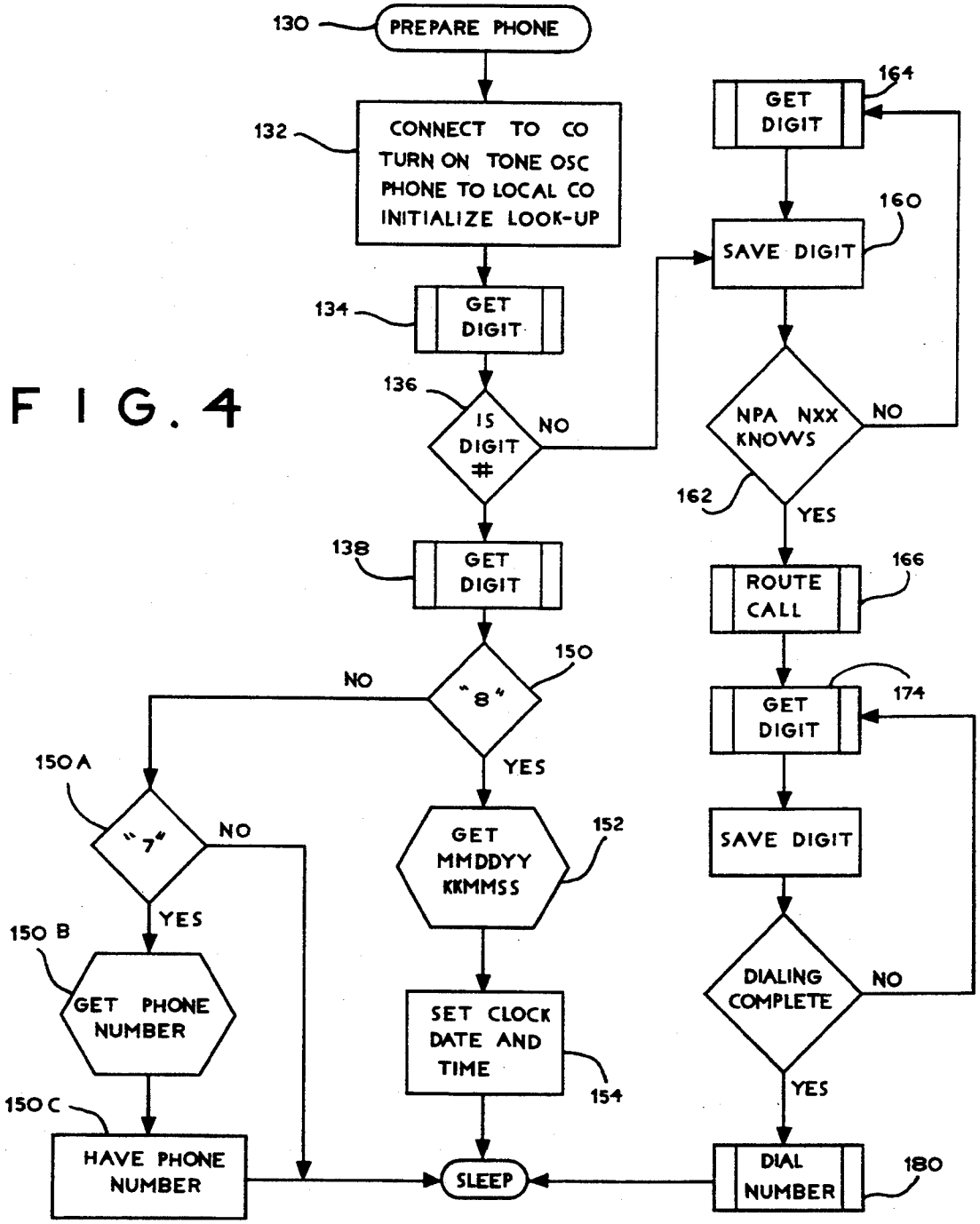
130
PREPARE PHONE
132
CONNECT TO CO
TURN ON TONE OSC
PHONE TO LOCAL CO
INITIALIZE LOOK-UP
134
GET DIGIT
136
IS DIGIT #
NO
138
GET DIGIT
150
"8"
NO
YES
150A
"7"
NO
YES
150 B
GET PHONE NUMBER
150 C
HAVE PHONE NUMBER
152
GET MMDDYY KKMMSS
SET CLOCK DATE AND TIME
154
SLEEP
164
GET DIGIT
160
SAVE DIGIT
NPA NXX KNOWS
NO
162
YES
166
ROUTE CALL
174
GET DIGIT
SAVE DIGIT
DIALING COMPLETE
NO
YES
DIAL NUMBER
180

FIG. 4A

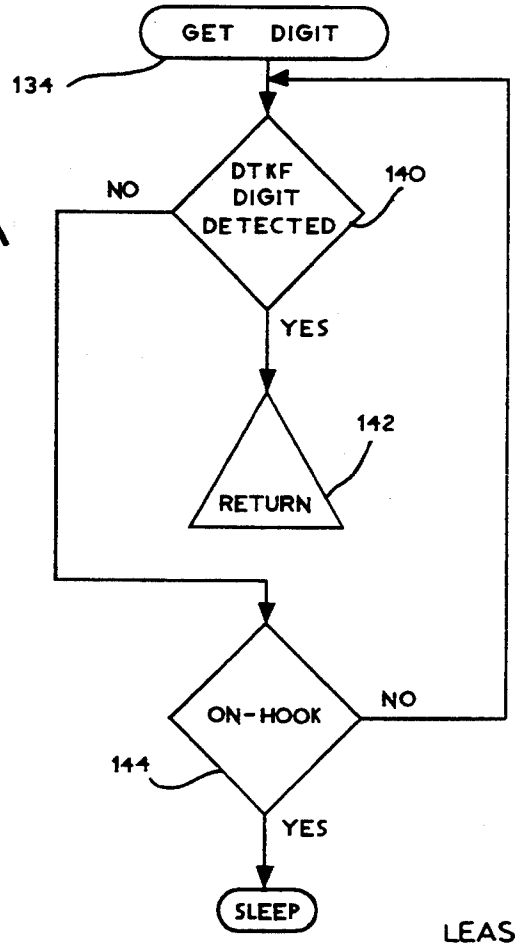
GET DIGIT
134
DTKF DIGIT DETECTED
140
NO
YES
142
RETURN
ON-HOOK
NO
144
YES
SLEEP

FIG. 6

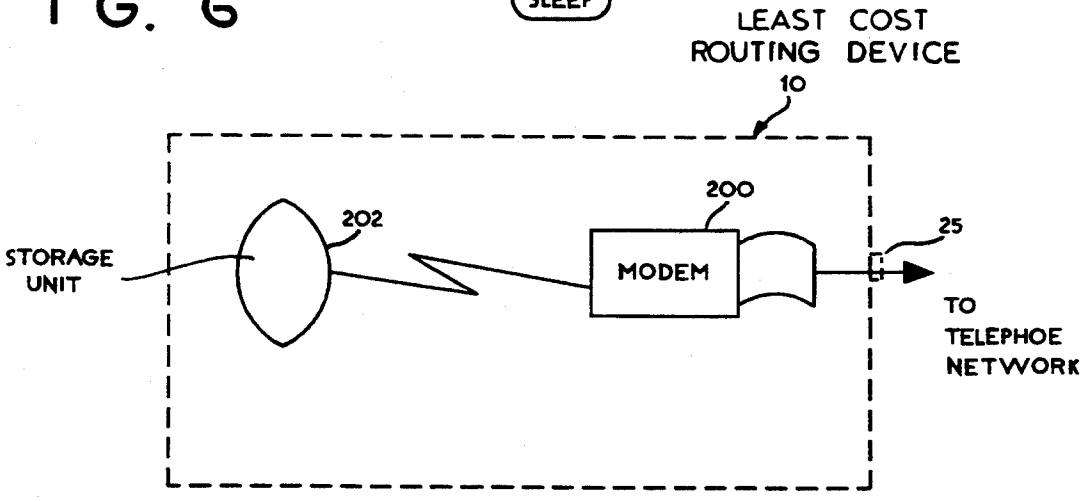
LEAST COST ROUTING DEVICE
10
200
202
25
STORAGE UNIT
MODEM
TO TELEPHOE NETWORK

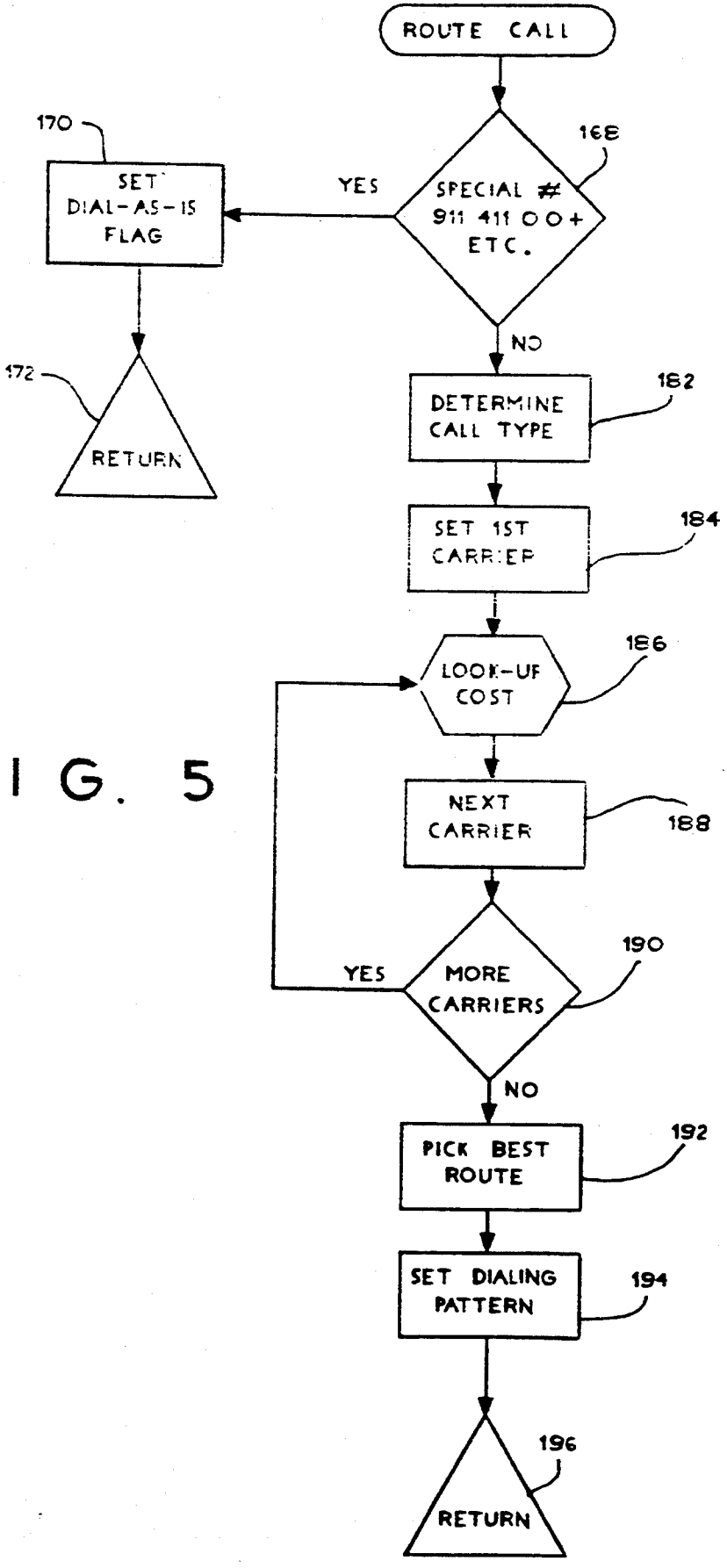
ROUTE CALL
168
SPECIAL # 911 411 00+ ETC.
YES
170
SET DIAL-AS-IS FLAG
172
RETURN
NO
182
DETERMINE CALL TYPE
184
SET 1ST CARRIER
186
LOOK-UP COST
188
NEXT CARRIER
190
MORE CARRIERS
YES
NO
192
PICK BEST ROUTE
194
SET DIALING PATTERN
196
RETURN

FIG. 5

LEAST COST ROUTING DEVICE FOR SEPARATE CONNECTION INTO PHONE LINE

FIELD OF THE INVENTION

This invention relates to a device which can be connected directly into the phone line for routing phone calls made from a first phone along the least cost path of the telephone network to a second phone.

BACKGROUND OF THE INVENTION

The advent of numerous local and long distance telephone carriers has resulted in a wide selection of different carriers which have different telephone cost rates depending on the time of day, the number of phone calls, the location of a calling party and other factors. Typically, a consumer chooses one carrier, and maintains that carrier account for all long distance calling needs, and in some instances for local calls also. With increased competition among interstate, intrastate, interlata and intralata phone carriers, a caller could save money if different carriers are chosen for each particular phone call to a particular destination.

It has been known to design complex phones that route calls along selected switching points via selected tie lines to establish a least cost route. For example, U.S. Pat. No. 4,122,308 to Weinberger et al. discloses such a device. It has been found, however, that many consumers are unwilling to purchase a complex telephone device in substitution for the phone already used in the home. Typically, consumers buy a phone for aesthetic or economic reasons. Consumers have been found unwilling to purchase complex phone equipment in lieu of phones already purchased which are more simple, smaller and aesthetically pleasing to the eye.

SUMMARY OF THE INVENTION

One of the features of the present invention is a device that may be connected within the phone line separate and apart from the telephone and which routes telephone calls along a least cost route originating from a first telephone through the telephone network to a second telephone.

Another feature of the present invention is a device that can be connected directly within the telephone line originating from a first telephone and can be hidden from view such as behind a furniture piece.

Another feature of the invention is a device for routing telephone calls along a least cost route that can be quickly attached and detached from the telephone line such as by telephone jacks.

In accordance with the present invention, the device routes telephone calls along a least cost route originating from the first telephone through the telephone network to a second telephone. As is conventional, the network has a plurality of alternate communication switch paths corresponding to different carriers which can be chosen to route the call.

A housing forms an enclosure and has jacks mounted on the housing for interconnection to the phone line. A first jack interconnects to the phone side of the phone line and a second jack interconnects to the network side of the phone line. The device components are contained in the enclosure and includes a switch which operatively connects to the first jack for disconnecting the first phone from the network. A current source is generated through the switch to the first phone and corresponds to the current provided by the phone network at

the central office. A database stores billing rate parameters for determining a least cost communication path based on the least cost routing parameters, which could include such parameters as the time and date of the call.

Means is operatively connected to the switch for detecting and storing a dialed phone number originating from the first phone. The database is addressed for identifying a plurality of communication switch paths to the dialed number as well as the cost rate of each path. The cost rate of each path is compared to determine a least cost route for the call. A tone generator is connected to the switch means and the second jack and generates a number sequence corresponding to the desired carrier so that the dialed call is routed through the second jack and phone line to the selected communication carrier so as to establish a switched connection between the first and second phones.

When a call is incoming, the switch connects the first phone to the network. An internal power supply provides power to the current generating means. In one aspect of the invention, the means generating the number sequence is a dual tone multifrequency generator that generates the necessary tones to the central office for establishing the least cost route. The detecting means includes, but is not limited to a dual tone multifrequency detector for detecting tones sent by the first phone.

The housing may be a number of different configurations. In one embodiment it is substantially cylindrical with opposing ends. The first jack is positioned on one end and the second jack is positioned on the other end.

In another aspect of the invention, the database is updated with a current billing rate schedule. In one aspect of the invention the update means includes a circuit board mounted within the enclosure, and the database is contained on a removable chip positioned on the circuit board. The housing may include a removable cover for accessing the chip on the circuit board to replace it with an updated chip. In still another aspect of the invention, the device includes a modem for receiving signals through the telephone line and downloading updated information to the database.

In still another aspect of the invention, a display is mounted on the housing and visibly displays the time and date. The time and date display receives a predetermined dial sequence from the first phone corresponding to a predetermined date and time to be displayed. After receiving the predetermined dial sequence, the display time and date is changed based on the received signals. In some designs, the date and time display can also be changed manually.

DESCRIPTION OF THE DRAWINGS

The foregoing advantages and features of the present invention will be appreciated more fully from the following description, with reference to the accompanying drawings in which:

FIG. **1** is an environmental view showing the device in accordance with the present invention positioned behind a sofa in a household.

FIG. **2** is a block diagram of the overall circuit used in the device of the present invention.

FIG. **3** is a flow chart depicting the initializing of the device and flow of an incoming call to the phone.

FIG. **4** is a flow chart depicting the routine for changing the display and dialing the codes for least cost routing in accordance with the present invention.

FIG. 4A is a flow chart illustrating the routine for obtaining digits for a least cost route.

FIG. 5 is a flow chart of a subroutine in the flow chart of FIG. 4 showing a database look-up routine.

FIG. 6 is a block diagram of the device with a modem.

FIG. 7 is a isometric view of one design of the device showing a cover that has been removed for accessing the chip to update the database.

DETAILED DESCRIPTION OF THE INVENTION

Referring now to FIG. **1**, the device **10** of the present invention is shown connected or "plugged" into the phone line **12** of a first telephone **14** in the environment of a household **15** and positioned out of sight behind a sofa **16**. As evident, the device of the present invention is advantageous because it can be readily connected within the phone line **12** and hidden from view without purchasing a new phone. Many consumers select phones based on aesthetic and economic reasons, and some consumers are unwilling to spend large sums for complex and unwieldy phones.

As shown in FIGS. **1** and **7**, the device **10** includes a housing **20** which forms an enclosure **22**. In the illustrated embodiment, the housing **20** is cylindrically configured with two opposing ends **20***a*, **20***b*. Although the cylindrical configuration is illustrated, any configuration can be used depending on the designer's choice and purchaser's desire. It is even possible to design the device **10** to be an ornament that can rest on a table or other readily visible place. A cylindrical configuration for the housing **20** has been found easy to mold and relatively inexpensive. AS shown in the drawings, the housing includes a first jack **24** for connecting "plugging" to the phone side of the phone line **12** and a second jack **25** for connection or "plugging" to the network side of the phone line.

The electronic components forming the device **10** are mounted within the enclosure, typically on a circuit board as shown in FIG. **7**. The housing can be designed with a removable cover **26** (FIG. **7**) to access the components, or a removable end where the circuit board can be slid outward to access any components.

Referring now to FIG. **2**, the basic components used in the device of the present invention are shown in the block diagram. As noted before, the second phone jack **25** has one line **32** connecting to the first phone jack **24** positioned on the other end of the cylindrically configured housing. The phone jack **25** connects to a switch **36**, referred to as a 2 Form C switch, which switches the phone off the network to the other components contained in the device. The switch **36** connects to a "local CO (central office)" current source **38** which generates a current corresponding to the current supplied by the central office of the network. The switch **36** connects and disconnects the phone from the network into the current source **38**, which in turn supplies a current to the phone equivalent to the current supplied by the central office of the network. The switch **36** also connects to a line current detector **40** (off-hook detector) which detects an off-hook or on-hook state of the phone. A combination polarity guard **42** and Direct Access Arrangement **44** (DAA) interfaces and allows communication to the network. The line current detector can be formed from numerous types and brands of device. One available device is a teltone M949 device.

The controller for the device **10** includes the standard components of a microprocessor including a microprocessing unit **50** (MPU) such as a Toshiba TMPZ 84C011 and a RAM chip **52** such as a generic chip sold by Hyundai under the designation HY6116. A bank selected Eprom **54** for storing the database is also included and can be a generic Eprom chip such as a Toshiba TC574000 chip with more Eprom than the microprocessor can directly address. A real time clock **56** maintains the proper time and provides signals for controlling the device. An example of a clock chip which can be used for the device is an Epsom RTC62421B chip. The microprocessing unit **50** includes the conventional address, control, and data buses **60**, **62**, **64** and an input output bus **66**.

A serial bus **68** connects from the MPU **50** to a display controller **70** which controls a $3\frac{1}{2}$ digit display **72**. The $3\frac{1}{2}$ digit display **72** displays the time and date and is positioned on the outside of the housing where it can be readily read. A ring detect circuit **74** is interconnected to the input-output bus and the incoming line jack **30** and detects the ringing of the phone. A power supply **76** is also included and provides the current for the local CO current generator **38**. In the present invention, power can be generated from the phone company when the first phone is "off-hook", or generated from the battery when the first phone is "on-hook".

Once a minute the device will update the date and time on the display **72** and then revert to a passive state also known as the "sleep" state. It is not possible to draw power for the device **10** from the phone company in an "on-hook" condition. Therefore, the power supply **76** provides power once a minute to change the display **72** to a new setting. A DTMF (dual tone multifrequency) tone generator **80** includes a crystal oscillator **82** which together generate the tone frequencies necessary to generate the tones for the dialing sequences. An analog switch **84** allows switching to either the-phone or the network. The dial tone detect circuit **86** connects to the line coming from the polarity guard **42** and connects to the line detector **40**. The DTMF tone detector **88** detects the tones generated from the first phone. The reset circuit **89** allows for resetting the entire circuit from a begin point.

Referring now to FIGS. **3–5**, there are illustrated flow charts depicting the operation of the device in accordance with the present invention. The steps are enumerated beginning with the numeral **100** and follow through with sequential even numbers in most cases.

Initially, as shown in FIG. **3**, in step **100** the device detects an "off-hook" condition for the first phone, such as when the handle is raised from the cradle of a phone. The device is initialized in step **102** and the clock reset is disabled. The initializing step **102** can also occur when the reset occurs such as a startup in step **104**. Thus, it is evident that a reset occurs in two conditions: 1) when the phone goes "off hook" or 2) when the real time clock emits a pulse (such as once a second) for setting the clock.

In step **106** the ring detect circuit **74** detects if there is a ring. If a ring is detected, the word "USE" in step **108** is displayed on the $3\frac{1}{2}$ digit display **72** corresponding to the device **10** being in use. The phone remains connected by the switch **36** to the central office network and the DTMF tone oscillator and generator **80**, **82** operation are terminated. The power is shut down in step **12** of the device to allow communication between the first phone and the second phone, who was the

calling party in this instance. The device **10** has gone into a passive mode also referred to as a "sleep mode" in step **14**.

If during initialization in step **106** the ring detector did not detect a ring, the device **10** then checks for an off-hook condition in step **16**. If there is no off-hook condition, then the device is restarting such as from a clock pulse. The clock count is incremented in step **118**. If the clock count is greater than 60 seconds in step **120**, then the display controller **70** displays a new date and time on the 3½ digit display **72** in step **122**. If the count is not greater than 60 seconds then the phone remains connected to the central office (phone network) in step **110** and the phone has gone into a passive mode in step **112**.

If the off-hook condition is sensed in step **106**, the phone is prepared in step **130**, i.e., the device is prepared to receive DTMF tone signals from the first phone (FIG. **4**). In this step the device **60** connects to the central office (phone network) in step **132** and the DTMF tone generator **80, 82** is set to the "on" position. The first phone is connected via the switch **36** to the local central office, i.e., the local current source **38**, to generate a current through the switch to the jack **34** and to the first phone. Additionally, in step **132**, the device is initialized to begin the lookup routines in the database.

The caller at the first phone then dials a number and the device **10** enters a subroutine known as "get digit" in step **134** (FIG. **4A**). The DTMF tone detector **88** detects each digit as it is called. If the digit is a "pound sign" ("#") in step **136**, then the device is initialized to prepare the date and time on the display **72**. Although the "pound sign" is illustrated as the initial sequence code for settling the time and date, it is readily apparent that any sequence of codes can be used as long as the code is not the beginning of a telephone number.

If the digit is a "pound sign", the "get digit" subroutine is followed once again in step **138**. The "get digit" subroutine is shown in greater detail on the left side of FIG. **4**. A DTMF digit is detected in step **140** and the routine then returns in step **142** to the mainflow chart. If the digit is not detected, a test is made to see whether the first phone current is on hook in step **144**. If the first phone is not on hook the subroutine continues to detect digits. If the first phone is on hook, then the device goes into "sleep" or passive mode.

If the numeral **3** is detected in step **150**, corresponding to the letter D, then the DTMF tones following are input as the date, such as the month, day and year, as well as the time, such as the hour, minute and seconds in that order in step **152**, and displayed on the 3½ digit display in step **154**. The device then routes into the passive "sleep" mode. If the numeral "3" was not detected in step **150** the device then routes into the sleep mode, or could implement other special functions indicated by the digit, e.g. (test modes). For example, if the number "7" is detected (step **150A**) for the phone, corresponding to the letter "P", the telephone number for the device is obtained (step **150B**), and saved (step **150C**). Typically, this routine can be started by the caller pressing the pound (#) key, and the number being stored as NPA NXX XXXX.

If the pound sign was not detected in step **136**, the detected digit is saved in step **160** and the detected digits are then analyzed in step **12** to determine if the area code and exchange (the NPA NXX) are known in step **12**. If they are not known, the get "digit routine" is repeated in step **14** until the NPA NXX code is known. The call is then routed in step **16** in a route call routine, which is set forth in FIG. **5**. The device distinguishes from the dialed digit if an area code (NPA) has been dialed. If the NPA has not been dialed, this device uses the NPA from the data specified for the device location.

As shown in FIG. **5**, the device **10** initially determines whether the area code and exchange digits known are in a special category in step **168** such as 911, 411, 800, or 900 numbers. If the dial routine is a special number, the telephone signal is flagged in step **170** and returned to the main routine where further digits such as the last four digits of the phone number are obtained and received in step **174**. The digits are saved in step **176** and the dialing is completed in step **178**. The number is then dialed in step **180** and the device routes into the passive or sleep mode and the call completed. If the dialing is not complete, then the get digit routine is repeated until all digits from the telephone number are obtained.

If the number in step **168** is not a special number (FIG. **5**), the call type is determined in step **182**, e.g. if the call is local, interlata, intralata, interstate, intrastate or a combination thereof. In step **284** the first carrier is set and the cost is looked up in the database in step **186**. The next carrier is then set in step **188**. If there are more couriers in step **190**, the look up cost is repeated until all carriers are exhausted. In step **192** the best carrier is picked and the dialing pattern set in step **194**. The sequence is then returned in step **196** to the route call routine of step **166**.

Because the rates among different carrier may change monthly, or even daily and weekly depending on circumstances, the database may be updated. In one embodiment, the database can be downloaded through a modem **200** (FIG. **6**) to a storage unit **202**. However, this method will require additional components such as a modem.

In another embodiment, the Eprom chip containing the database is removed, such as by accessing the chip through an opening **210**. Once the chip is removed-,another updated chip is substituted and the housing cover **26** replaced on the device **10**. In an alternative embodiment, an end can be removed, and the entire circuit board **220** holding the components slid outwardly to expose the chips to be replaced. Once any chips are replaced, the circuit board can be slid back into the housing.

The device **10** of the present invention is advantageous over prior art call metering devices that are incorporated within the phone itself. The device of the present invention can be connected into the phone line coming from a phone and easily hidden from view or placed in an inconspicuous location, and a consumer does not have to purchase anew phone. Basic microprocessor and other circuits are used and can be contained in an attractive housing, and the date and time can be easily set by the keypad of a standard telephone. Additionally, in some instances, the determined cost of a phone call may be given a bias for preference to a given carrier. For example, if a first carrier is no greater than 5% additional cost than a second carrier, that first carrier may be given a preference.

It is to be understood that the above description is only one embodiment of the invention. Numerous other arrangements may be devised by one skilled in the art without departing from the spirit and scope of the invention.

That which is claimed is:

1. A device for routing telephone calls along a least cost route originating from a first telephone to a second telephone having an associated telephone number via a network having a plurality of alternate communication switch paths corresponding to different carriers which can be chosen to route the call and normallyproviding a current to said first telephone when said first telephone is in use, comprising

a housing forming an enclosure and comprising first jack means for connection to said first telephone and second jack means for connection to said network

switch means operatively connected to said first jack means for disconnecting said first telephone from said network,

means operatively connected to said switch means for generating a current through said switch means to the first telephone, corresponding to a current provided by said network,

database means for storing billing rate parameters for determining a least cost communication path for call corresponding to said telephone number,

means operatively connected to said switch means for detecting and storing said telephone number originating from the first telephone,

means for addressing said database means for identifying a plurality of communication switch paths to said second telephone and the cost rate of each path,

means for comparing the cost rate of each path so as to determine a least cost route, and

means operatively connected to said switch means and said second jack means for generating a number sequence corresponding to a desired carrier so that said call is routed through said second jack means to the selected communication path and carrier to establish a switched connection between said first telephone and said second telephone phone.

2. The device according to claim 1 wherein said least cost communication path parameters include the time and date of the call.

3. The device according to claim 1 wherein said switch means connects said first telephone to said network during an incoming call.

4. The device according to claim 1 including an internal power supply connected to said means for generating a current.

5. The device according to claim 1 wherein said means for generating said number sequence comprises a dual tone multifrequency generator.

6. The device according to claim 1 wherein said housing is substantially cylindrical with opposing ends, wherein said first jack means is positioned on one end and said second jack means is positioned on the opposite end.

7. The device according to claim 1 wherein said detecting means includes a dual tone multifrequency detector.

8. The device according to claim 1 including means for maintaining the time and date so as to determine the least cost route based on the time and date of the call.

9. The device according to claim 1 wherein said cost may be given a bias for preference to a given carrier.

10. The device according to claim 1 including means for updating said database means with a current billing rate schedule.

11. The device according to claim 10 wherein said update means includes a circuit board mounted inside said enclosure, and said database means comprises a removable chip on said circuit board, and means for accessing said removable chip from outside said housing.

12. The device according to claim 11 wherein said means for accessing said removable chip includes a removable cover on said housing for accessing said chip.

13. The device according to claim 10 wherein said update means includes a modem for receiving signals through said telephone line and downloading the update information.

14. A device for routing telephone calls along a least cost route originating from a first telephone to a second telephone having an associated telephone number via a network having a plurality of alternate communication switch paths corresponding to different carriers which can be chosen to route the call and normally providing a current to said first telephone when said first telephone is in use, comprising

a housing forming an enclosure and comprising first jack means for connection to said first telephone, and second jack means for connection to said network, means positioned on said housing for visibly displaying the time and date,

switch means operatively connected to said first jack means for disconnecting said first telephone from said network,

means operatively connected to said first jack means for disconnecting said first telephone from said network,

means operatively connected to said switch means for generating a current through said switch means to said first telephone corresponding to said current provided by said network,

means operatively connected to said time and date display means and said switch means for receiving a predetermined dial sequence from said first telephone corresponding to a predetermined date and time to be displayed and means for changing the displayed time and date based on the received signals,

database means for storing billing rate parameters for determining a least cost communication path for a call corresponding to said telephone number, based on such factors as the time and date of the call,

means operatively connected to said switch means for detecting and storing said telephone number originating from the first telephone,

means for addressing said database means for identifying a plurality of communication switch paths to said second telephone and the cost rate of each path,

means for comparing the cost rate of each path so as to determine a least cost route, and means operatively connected to said switch means and said second jack means for generating a number sequence corresponding to a desired carrier so that said call is routed through said second jack means to the selected communication path and carrier to establish a switched connection between said first telephone and said second telephone.

15. The device according to claim 14 including means positioned on said housing for manually changing the date and time of the display.

16. The device according to claim 14 wherein said means for generating said number sequence comprises a dual tone multifrequency generator.

17. The device according to claim **14** wherein said housing is substantially cylindrical with opposing ends, wherein said first jack means is positioned on one end and second jack means is positioned on the other end.

18. The device according to claim **14** wherein said detecting means includes a dual tone multifrequency detector.

19. The device according to claim **14** including means for updating said database means with a current billing rate schedule.

20. The device according to claim **19** wherein said update means includes a circuit board mounted inside said enclosure, and said database means comprises a removable chip on said circuit board, and means for accessing said removable chip from outside said housing.

21. The device according to claim **20** wherein said means for accessing said removable chip includes a removable cover on said housing for accessing said chip.

22. The device according to claim **19** wherein said update means includes a modem for receiving signals through said telephone line and downloading the update information.

23. The device according to claim **14** wherein said cost may be given a bias for preference to a given carrier.

24. An apparatus for displaying a time quantity which can be initiated from a telephone of the type capable of generating dual tone multifrequency signals comprising

a housing forming an enclosure and comprising first jack means for interconnection to said telephone, and second jack means for connection to a telephone switching network, said network normally providing a current to said telephone when said telephone is in use, means positioned on said housing for visibly displaying a time quantity,

switch means operatively connected to said first jack means for disconnecting said telephone from said network,

means operatively connected to said switch means for generating a current through said switch means to said telephone corresponding to said current provided by said network,

means operatively connected to said means for displaying a time quantity and said first jack means for receiving said dual tone multifrequency signals, from said telephone when said telephone is disconnected from said network, said signals corresponding to said time quantity and for changing the displayed time quantity based on signals from said telephone, and means responsive to a dialing sequence originating on said telephone and operatively connected to said switch means for connecting said telephone to said network.

25. The apparatus according to claim **24** wherein said time quantity is the time of day.

26. The apparatus according to claim **24** wherein said time quantity is the date.

* * * * *

UNITED STATES PATENT AND TRADEMARK OFFICE

CERTIFICATE OF CORRECTION

PATENT NO. : 5,425,085

DATED : June 13, 1995

INVENTOR(S) : Gerald J. Weinberger, et al.

It is certified that error appears in the above-identified patent and that said Letters Patent is hereby corrected as shown below:

Col. 8, line 29-31, please delete "means operatively connected to said first jack means for disconnecting said first telephone from said network,".

Signed and Sealed this

Seventh Day of November, 1995

Attest:

BRUCE LEHMAN

Attesting Officer

Commissioner of Patents and Trademarks

[redacted]

US005425085B1

(12) REEXAMINATION CERTIFICATE (4452nd)

United States Patent
Weinberger et al.

(10) **Number: US 5,425,085 C1**
(45) **Certificate Issued: Oct. 9, 2001**

(54) **LEAST CONTROL ROUTING DEVICE FOR SEPARATE CONNECTION INTO PHONE LINE**

(75) Inventors: **Gerald J. Weinberger**, Smithtown; **Roger C. Lee**, Wading River, both of NY (US)

(73) Assignee: **Rates Technology Inc.**, Smithtown, NY (US)

Reexamination Request:
No. 90/005,472, Aug. 31, 1999

Reexamination Certificate for:
Patent No.: **5,425,085**
Issued: **Jun. 13, 1995**
Appl. No.: **08/210,670**
Filed: **Mar. 18, 1994**

Certificate of Correction issued Nov. 7, 1995.

(51) **Int. Cl.**[7] **H04M 15/00**; H04M 7/00
(52) **U.S. Cl.** **379/112**; 379/111; 379/113; 379/114; 379/116; 379/130; 379/131; 379/219; 379/220; 379/221
(58) **Field of Search** 379/111, 112, 379/113, 114, 115, 116, 130, 131, 132, 219, 220, 221

(56) **References Cited**

U.S. PATENT DOCUMENTS

5,161,109		11/1992	Keating et al.	364/464.02
5,212,789		5/1993	Rago	395/600
5,400,395	*	3/1995	Berenato	379/114
5,420,914	*	5/1995	Blumhardt	379/115
5,473,630		12/1995	Penzias et al.	375/114
5,515,425		5/1996	Penzias et al.	379/114
5,799,071		8/1998	Azar et al.	379/113

FOREIGN PATENT DOCUMENTS

0 586 157 A2	3/1994	(EP)	G06F/15/403

OTHER PUBLICATIONS

Communiqué Telecommunications, Inc. (Ontario, California), "Customized Telemiser Selects Low–Cost Routing," *Computerworld*, vol. XVIII, No. 48, Nov. 28, 1983, p. 109 (plus cover page and contents page).

Communiqué Telecommunications, Inc. (Ontario, California), "Least–Cost Router," *Telecommunications*, vol. 18, No. 1, Jan., 1984, p. 92 (plus cover page and contents page).

Communiqué Telecommunications, Inc. (Ontario, California), "How to Make the Least of Your Long Distance Phone Bill," *Communications News*, vol. 21, No. 9, Sep. 1984, p. 171 (plus cover page).

Communiqué Telecommunications, Inc. (Ontario, California), "How to Make the Least of Your Long Distance Phone Bill," *Sports Illustrated*, Oct. 1, 1984, p. 113 (plus cover page).

CALLMISER Trademark File History (Registration No. 1725288; Registration Date Oct. 20, 1992; International Class 9).

* cited by examiner

Primary Examiner—Vijay Shankar

(57) **ABSTRACT**

A device interconnects within the phone line coming from a first phone and routes telephone calls along a least cost route originating from the first telephone to a second telephone via the network. A housing forms an enclosure and has a first jack for interconnection to the phone side of the phone line and a second jack for interconnection to the network side of the phone line. The housing forms an enclosure which includes a switch for disconnecting the first phone from the network. The device generates a source of current through the switch to the first phone corresponding to the amount of current provided by the phone network. A database stores billing rate parameters for determining various communication paths of different carriers based on parameters such as the time and date of the call. Phone calls from the first phone are detected and stored. The database is addressed and a plurality of communication switch paths are identified as well as the cost rate of each path. The cost rates for each identified path are compared to determine a least cost route for the call. The device generates a number sequence corresponding to a desired carrier so that the dialed call is routed through the second jack and phone line to the selected communication path and carrier so as to establish a switched connection between the first and second phones.

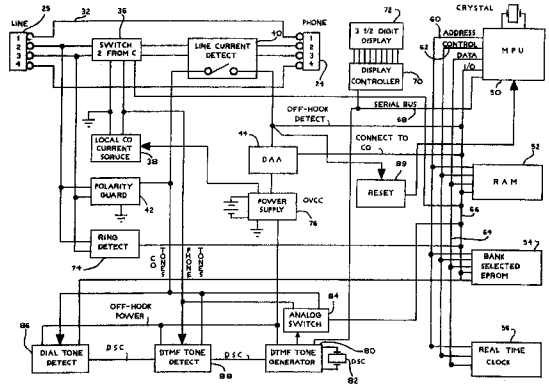

REEXAMINATION CERTIFICATE ISSUED UNDER 35 U.S.C. 307

NO AMENDMENTS HAVE BEEN MADE TO THE PATENT

AS A RESULT OF REEXAMINATION, IT HAS BEEN DETERMINED THAT:

The patentability of claims **1–26** is confirmed.

* * * * *

US005519769A

United States Patent [19]

Weinberger et al.

[11] **Patent Number: 5,519,769**

[45] **Date of Patent: May 21, 1996**

[54] **METHOD AND SYSTEM FOR UPDATING A CALL RATING DATABASE**

[75] Inventors: **Gerald J. Weinberger**, Smithtown; **Roger C. Lee**, Wading River, both of N.Y.

[73] Assignee: **Rates Technology Inc.**, Smithtown, N.Y.

[21] Appl. No.: **223,082**

[22] Filed: **Apr. 4, 1994**

[51] **Int. Cl.**[6] **H04M 15/00**

[52] **U.S. Cl.** **379/112**; 379/111; 379/113; 379/114; 379/115; 379/130; 379/131; 379/132

[58] **Field of Search** 379/111, 112, 379/113, 114, 115, 116, 130, 131, 132, 88, 104, 105, 106

[56] **References Cited**

U.S. PATENT DOCUMENTS

4,104,486	8/1978	Martin	379/106
4,122,308	10/1978	Weinberger	379/114
4,136,262	1/1979	Clark, Jr.	179/6.3
4,198,545	4/1980	Haist et al.	179/6.3
4,209,668	6/1980	Weinberger et al.	179/90
4,226,360	10/1980	Simjian	379/106
4,410,765	10/1983	Hestad	379/112
4,439,636	3/1984	Newkirk	379/91
4,521,857	6/1985	Reynolds	379/88
4,585,904	4/1986	Mincone	379/131
4,656,657	4/1987	Hunsicker	379/131
4,751,728	6/1988	Treat	379/114
4,813,065	3/1989	Segala	379/116
4,888,822	12/1989	Weinberger et al.	379/130
4,935,956	6/1990	Hellwarth	379/112
5,003,584	3/1991	Benyacar	379/135
5,187,710	2/1993	Chau	379/114
5,319,701	6/1994	Hird et al.	379/132

Primary Examiner—Stephen Chin
Assistant Examiner—Vijay Shankar
Attorney, Agent, or Firm—James & Franklin; Harold James; Robert L. Epstein

[57] **ABSTRACT**

A method and system for updating a database stores billing rate parameters for call rating devices associated with a calling station. The calling station calls at a predetermined date and time a rate provider, which includes billing rate parameters for a plurality of calling stations. The call rating device transmits over the telephone network to the rate provider the phone number of the calling station, and the date and time of the last updated database. The rate provider verifies that the billing rate parameters of the calling station should be updated, then transmits back over the telephone network to the calling station the updated database. The rate provider also sends data as to the new date and time for the call rating device to place a call to the rate provider.

48 Claims, 7 Drawing Sheets

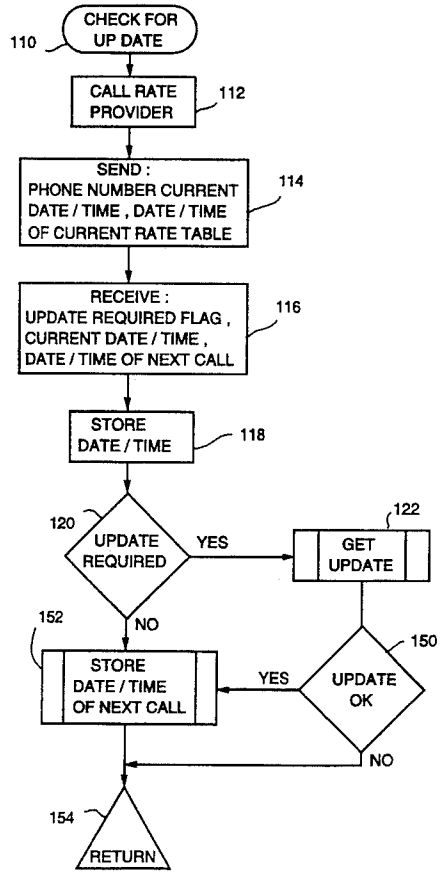

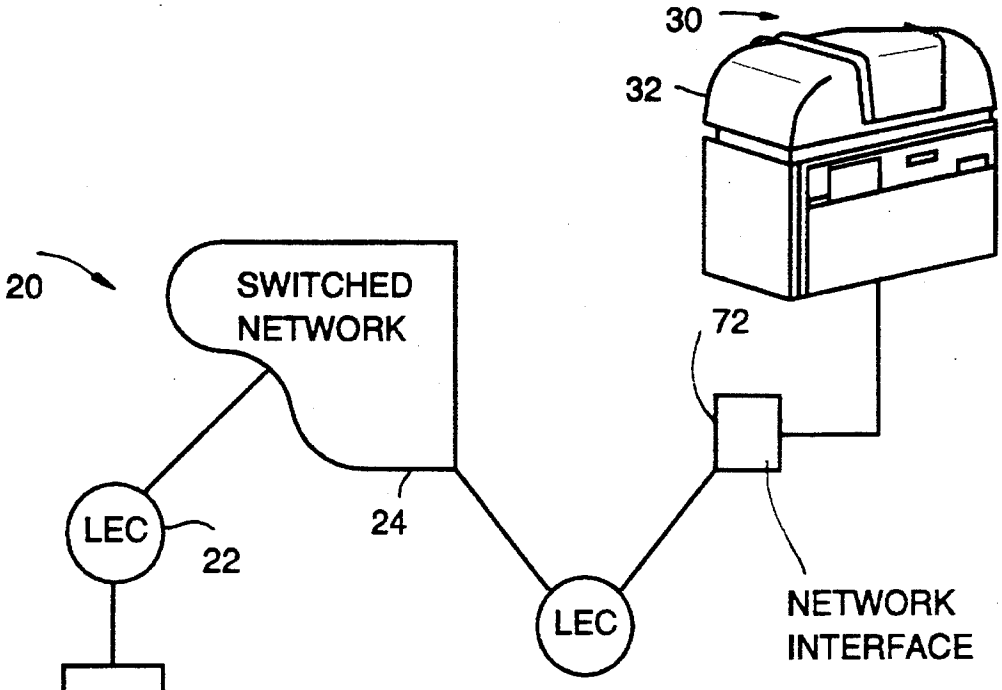
30
32
20
SWITCHED NETWORK
72
LEC
22
24
LEC
NETWORK INTERFACE

FIG 1

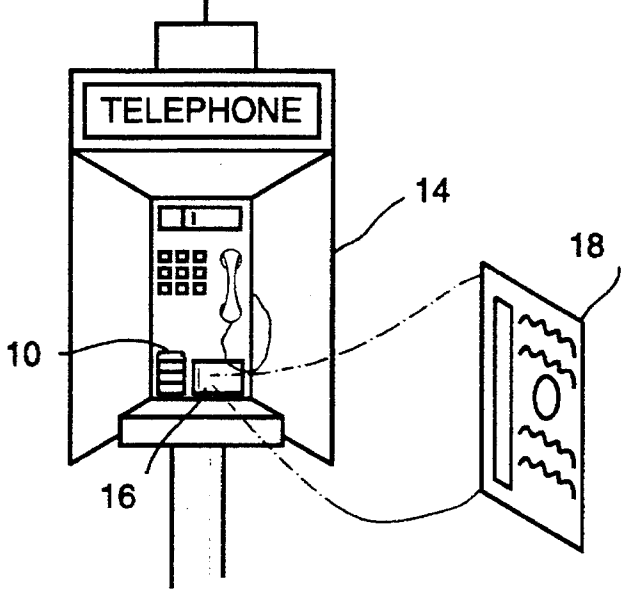
TELEPHONE
14
18
10
16

FIG 3

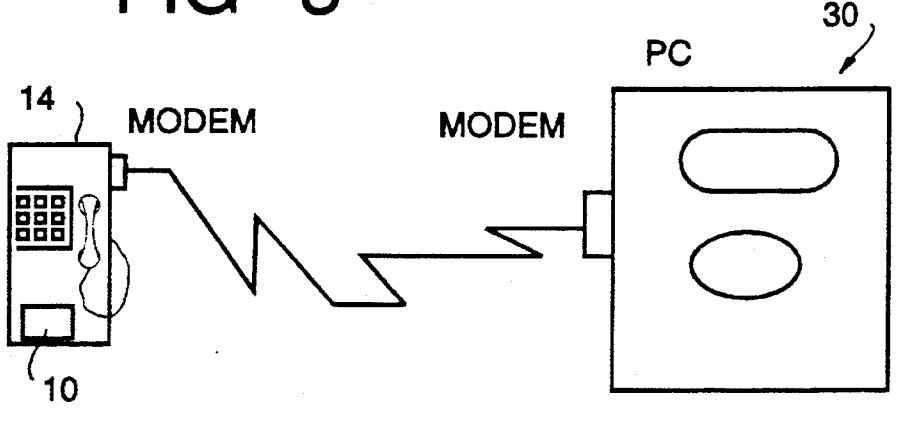
30
PC
14
MODEM
MODEM
10

FIG 2

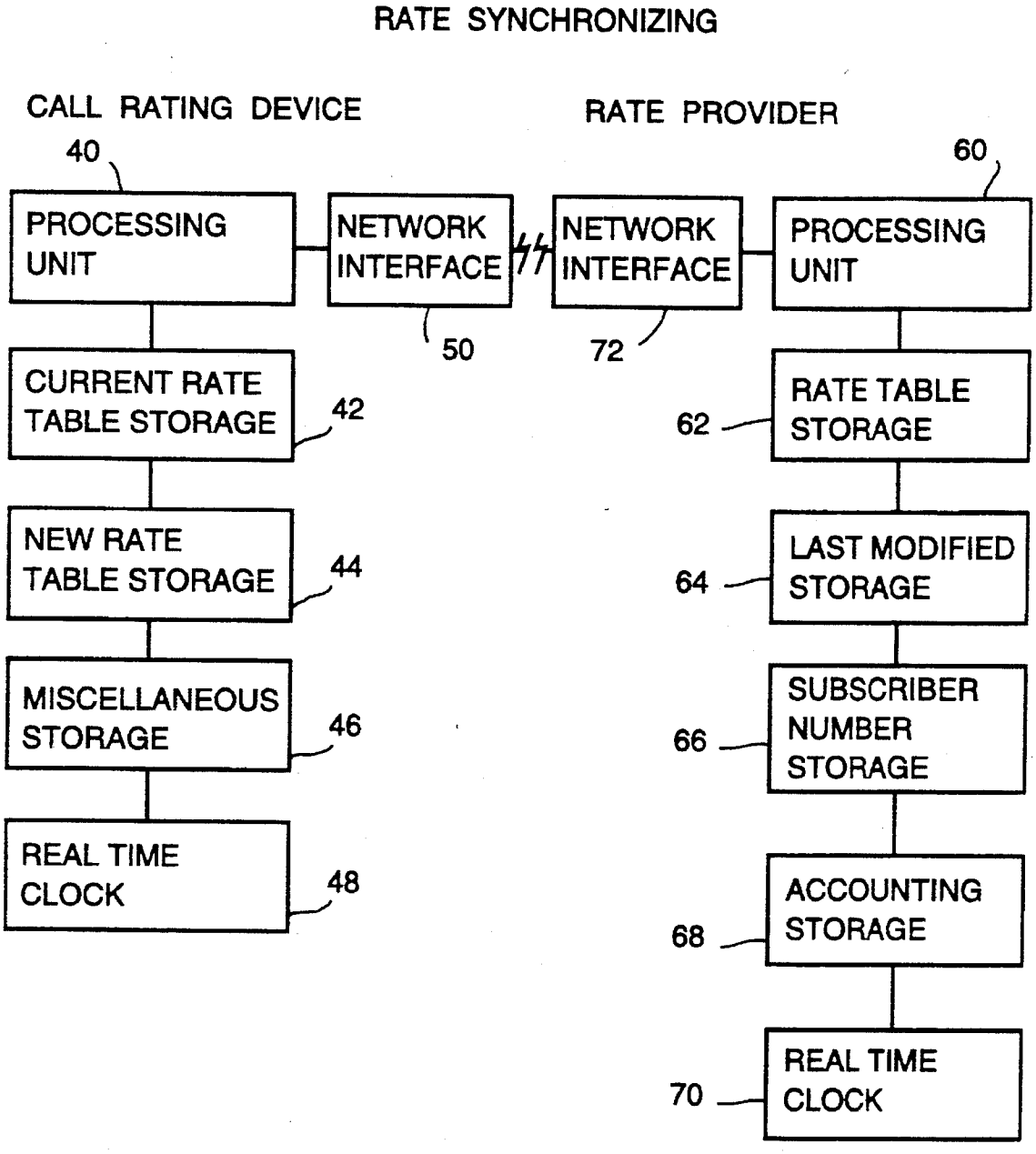
RATE SYNCHRONIZING
CALL RATING DEVICE
RATE PROVIDER
40
60
PROCESSING UNIT
NETWORK INTERFACE
NETWORK INTERFACE
PROCESSING UNIT
50
72
CURRENT RATE TABLE STORAGE
42
RATE TABLE STORAGE
62
NEW RATE TABLE STORAGE
44
LAST MODIFIED STORAGE
64
MISCELLANEOUS STORAGE
46
SUBSCRIBER NUMBER STORAGE
66
REAL TIME CLOCK
48
ACCOUNTING STORAGE
68
REAL TIME CLOCK
70

FIG 4

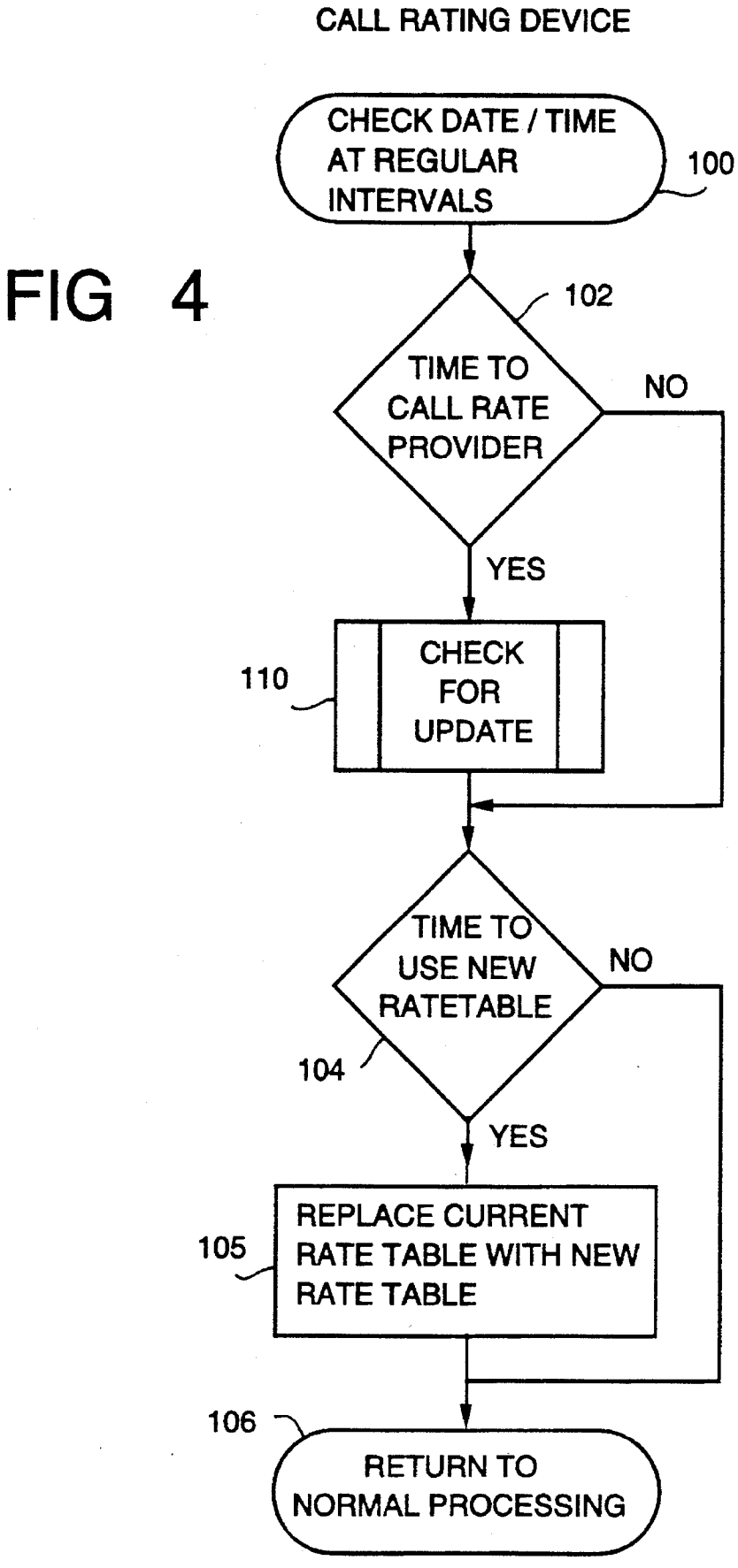
CALL RATING DEVICE
CHECK DATE / TIME AT REGULAR INTERVALS
100
102
TIME TO CALL RATE PROVIDER
NO
YES
110
CHECK FOR UPDATE
TIME TO USE NEW RATETABLE
NO
104
YES
REPLACE CURRENT RATE TABLE WITH NEW RATE TABLE
105
106
RETURN TO NORMAL PROCESSING

FIG 5

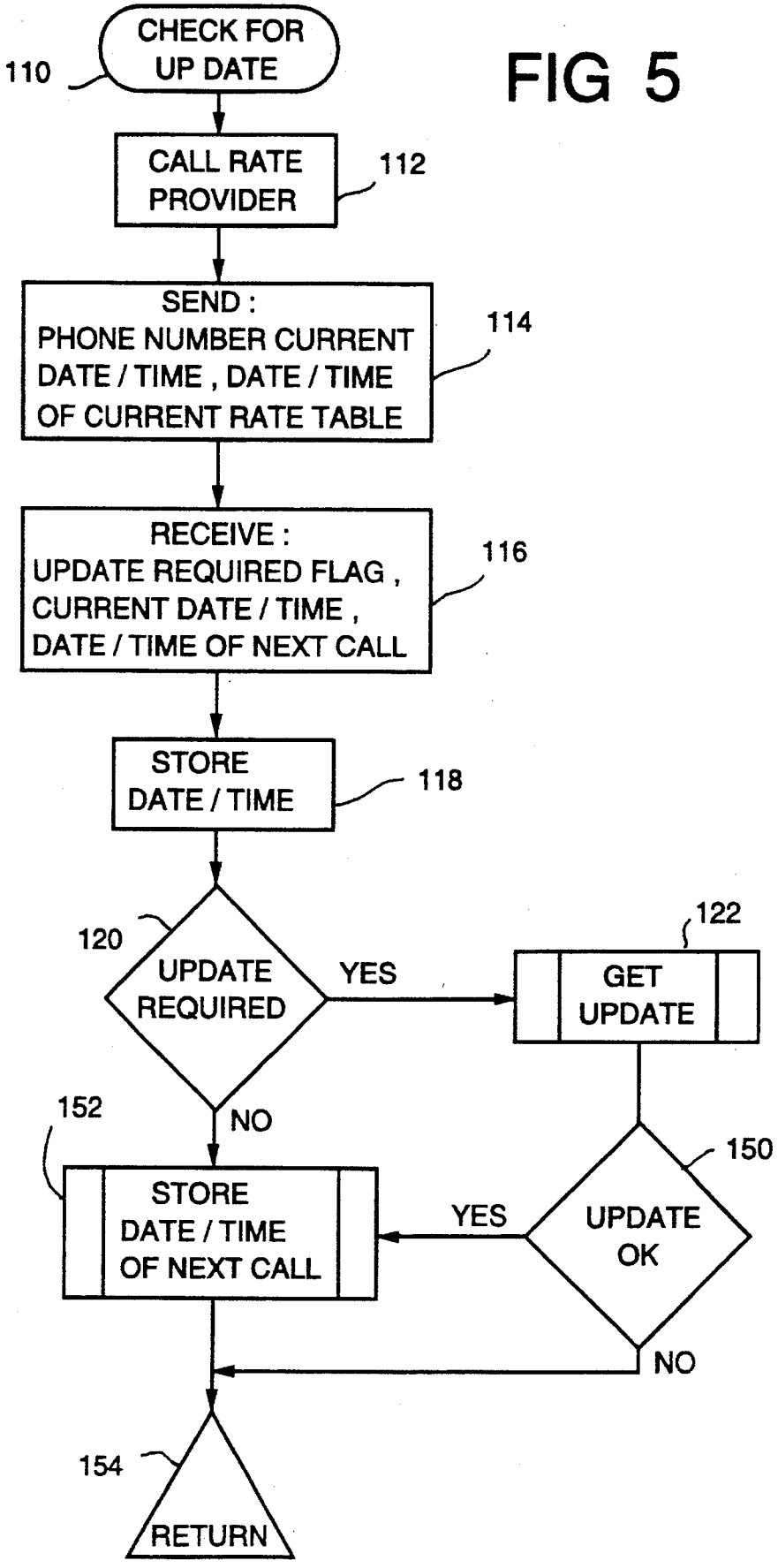
CHECK FOR UP DATE
110
CALL RATE PROVIDER
112
SEND : PHONE NUMBER CURRENT DATE / TIME , DATE / TIME OF CURRENT RATE TABLE
114
RECEIVE : UPDATE REQUIRED FLAG , CURRENT DATE / TIME , DATE / TIME OF NEXT CALL
116
STORE DATE / TIME
118
120
UPDATE REQUIRED
YES
122
GET UPDATE
NO
152
STORE DATE / TIME OF NEXT CALL
YES
150
UPDATE OK
NO
154
RETURN

FIG 6

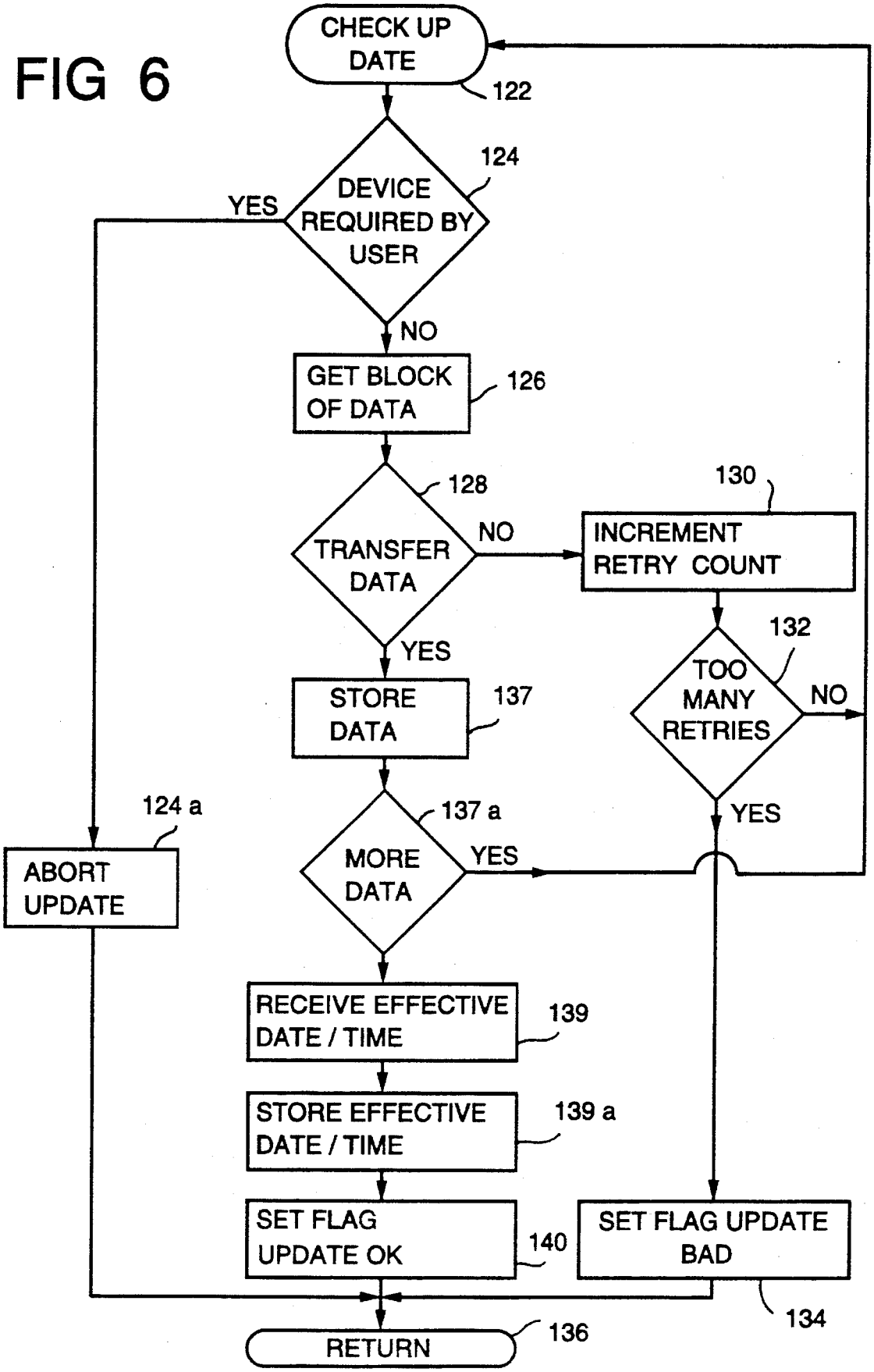
CHECK UP DATE
122
DEVICE REQUIRED BY USER
124
YES
NO
GET BLOCK OF DATA
126
TRANSFER DATA
128
NO
INCREMENT RETRY COUNT
130
YES
TOO MANY RETRIES
132
NO
YES
STORE DATA
137
MORE DATA
137 a
YES
ABORT UPDATE
124 a
RECEIVE EFFECTIVE DATE / TIME
139
STORE EFFECTIVE DATE / TIME
139 a
SET FLAG UPDATE OK
140
SET FLAG UPDATE BAD
134
RETURN
136

FIG 7

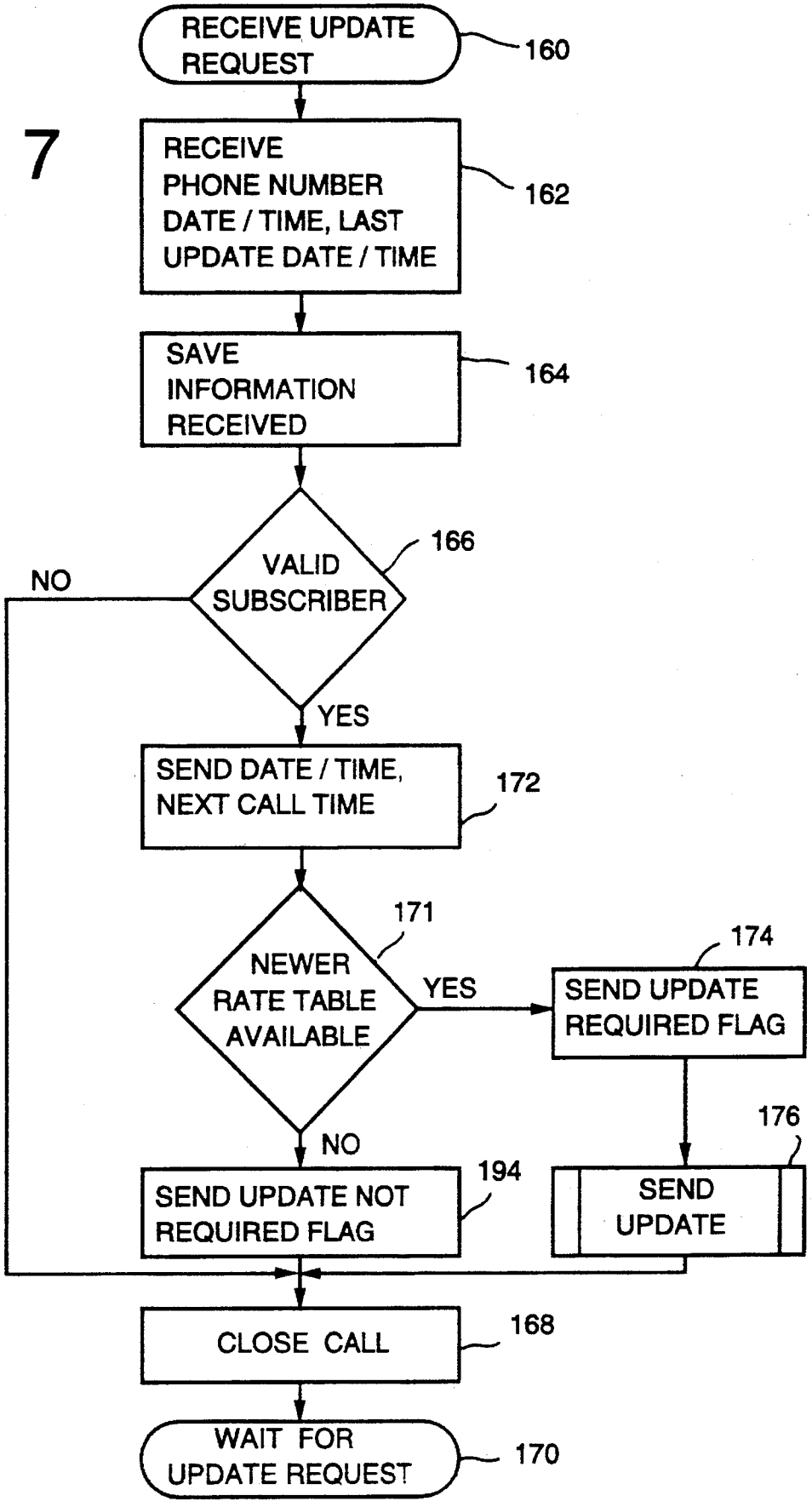
RECEIVE UPDATE REQUEST
160
RECEIVE PHONE NUMBER DATE / TIME, LAST UPDATE DATE / TIME
162
SAVE INFORMATION RECEIVED
164
VALID SUBSCRIBER
166
NO
YES
SEND DATE / TIME, NEXT CALL TIME
172
NEWER RATE TABLE AVAILABLE
171
YES
174
SEND UPDATE REQUIRED FLAG
176
NO
SEND UPDATE NOT REQUIRED FLAG
194
SEND UPDATE
CLOSE CALL
168
WAIT FOR UPDATE REQUEST
170

FIG 8

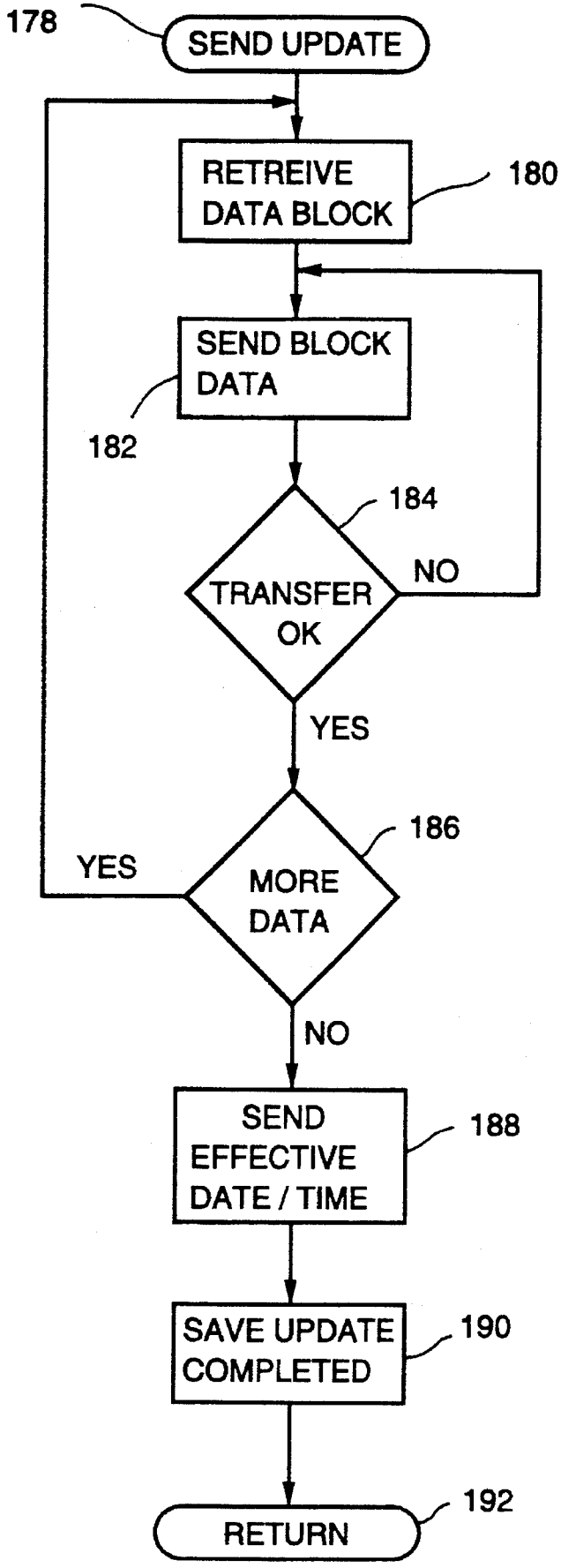
178
SEND UPDATE
RETREIVE DATA BLOCK
180
SEND BLOCK DATA
182
184
TRANSFER OK
NO
YES
186
MORE DATA
YES
NO
SEND EFFECTIVE DATE / TIME
188
SAVE UPDATE COMPLETED
190
RETURN
192

METHOD AND SYSTEM FOR UPDATING A CALL RATING DATABASE

FIELD OF THE INVENTION

This invention leads to a method and system for updating a database that stores billing rate parameters for a call rating device used in determining the cost of a telephone call.

BACKGROUND OF THE INVENTION

Competition among numerous local and long distance telephone carriers often results in many cost changes associated with placing both local and long distance telephone calls. Anticipated telephone services will probably include debit card calling from pay phones, as well sophisticated computer network hookup to the telephone network via pay telephones or other calling stations. In such circumstances, it is essential that any database storing a rate table used to cost such calls be accurate and current. The rates must be synchronized to current charges to maintain proper debiting of debit cards and cost charges on databases of cost accounting systems.

In copending patent application Ser. No. 08/210670, entitled "Least Cost Routing Device For Separate Connection Into Phone Line", filed Mar. 18, 1994, a device interconnects within the phone line of a first phone station such as in a residential household, and routes telephone calls along a least cost route originating from that telephone to a destination telephone via the telephone network. A database within the device stores billing rate parameters for determining various communication paths to different carriers based on parameters such as time and date of the call. A home purchaser of such device and service relies on the database to ensure that the least cost route is chosen. The database must be kept current, and updated with the latest rate changes, or the device's function does not consumer perform to expectations.

SUMMARY OF THE INVENTION

The advantages and features of the present invention now allows the database that stores billing rate parameters in a rate table for call rating devices to be updated. The call rating device is connected at a predetermined time and date via a data transfer line to a rate provider having billing rate parameters for a plurality of calling stations. Indicia identifying the call rating device and the date and time of the last update of the billing rate parameters is transmitted over the data transfer line to the rate provider. The rate provider verifies that the billing rate parameters should be updated, and it transmits to the call rating device the updated billing rate parameters when the rate provider determines that an update is required.

In one aspect of the invention, the data transfer line is a part of the telephone network. The call rating device is associated with a calling station and connects to the network via a modem. The rate provider includes a database stored in a personal computer, minicomputer or other similar device, which could connect to the network via a modem.

In one aspect of the invention, the data transfer between the call rating device and rate provider is terminated when the call rating device is used. Transfer of information should not interfere with the normal usage of the call rating device. This is advantageous such as when the call rating device is

incorporated within a pay telephone. If a customer desires to use the telephone, any pending rate transfer is terminated.

In another aspect of the invention, the call rating device stores the updated billing parameters in a separate database. When the telephone network switches to the new rates, the call rating device automatically substitutes the updated billing rate schedule into the old database. Typically, the rate provider sends the time and date when any call rating devices which are part of a rating network should call the rate provider to solicit rate information. The rate provider then sends a new billing rate schedule to respective call rating devices at different times. This is advantageous when many call rating devices are subscribers to the rate network. The rate provider will not be overloaded at one time with numerous "request for update" calls. During updating, the rate provider sends new times and dates when each respective call rating device should call for an updated database.

DESCRIPTION OF THE DRAWINGS

The foregoing advantages and features of the present invention will be appreciated more fully from the following description with reference to the accompanying drawings in which:

FIG. **1** is an environmental view showing the call rating device incorporated within a debit telephone connected via the telephone network to a rate provider in the form of a minicomputer.

FIG. **2** is a block diagram of the overall components of the call rating device and rate provider.

FIG. **3** is a block diagram showing basic components of a pay telephone and a call rating device in the form of a personal computer where modems connect to the telephone network.

FIG. **4** is a high level flow chart showing the basic processing for using and replacing a current rate table with a new rate table.

FIG. **5** is a flowchart showing the subroutine where the call rating device is checked for updates.

FIG. **6** is a flowchart showing the subroutine where the call rating device obtains the information from the rate provider.

FIG. **7** is a flowchart showing the routine where the rate provider receives an updated request from the call rating device.

FIG. **8** is a flowchart showing the routine where the rate provider sends an update to the call rating device.

DETAILED DESCRIPTION OF THE INVENTION

Referring now to FIG. **1**, there is illustrated the call rating device **10** of the present invention which is incorporated within a pay telephone **14**, which in the illustrated example is a debit telephone. Although the description proceeds in reference to the illustrated debit telephone **14**, it is understood that the call rating device **10** can be incorporated with the least cost rating device disclosed in U.S. patent application Ser. No. 08/210,670, entitled "Least Cost Routing Device For Separate Connection Into Phone Line, "filed", Mar. 18, 1994, the disclosure which is hereby incorporated by reference, and it can be incorporated with other telephones or personal computers connected to a LAN network.

In the illustrated embodiment, the debit telephone **14** includes a card slot **16** where a debit card **18** is inserted. The debit **18** card typically includes a dollar amount which will

be debited each minute as the phone is used. The phone includes an internal modem connection to allow data transfer along the phone network **20**. The phone network typically includes a central office **22** and a switched network **24**.

In the illustrated example, the rate provider **30** is a large capacity computer with a hard drive **32** for storing the rate information for various calling stations such as the debit telephone **14**. Although a minicomputer is illustrated as a rate provider, in smaller rate networks when not many subscribers use the system of the invention, a powerful personal computer will suffice.

In accordance with the present invention, the rate provider services numerous other subscribers to the updating service, and could include other debit telephones, household/residential telephones using plug devices as disclosed in the copending '670 application, or personal computers in cost management systems, LAN systems and other similar uses. The users form a rate network. Each user is a subscriber to the overall rate network. The billing rate parameters could include the rates for local and long distance calls, and the rates of various carriers in some instances.

As shown in FIG. **2**, the call rating device **10** would typically include a processing unit **40** such as a standard microprocessor unit. The current rate table storage **42** used for storing the billing rate parameters forming the rate table could be a static ram or any nonvolatile storage such as currently used with IBM Compatible PCs. An EEPROM has been found advantageous also. The new rate table storage **44** can be identical to the current rate table storage **42**, except that the new rate table storage will be substituted for the current rate table when an update is required. Miscellaneous storage **46** can also be static ram or other similar storage devices and will store such items as the phone number associated with the call rating device, the date and time in which to call the rate provider, as well as other miscellaneous information.

The amount of required storage capacity could be small, typically on the order of about 32K byte. Naturally, the amount of storage varies depending on the type of telephone or other device which is associated with the call rating device, and the end use of the device. The real time clock **48** maintains time over the processing unit and the movement of data between the various storage devices **42**, **44** and **46**. In the illustrated embodiment, the network interface for the call rating device is a modem which interfaces with the phone network. In some instances, however, the network interface could be associated with T1 lines and other communication paths.

The rate provider also includes a processing unit **60**. However, because of the larger database and processing demands placed upon the rate provider, the processing unit **60** typically is a larger unit such as associated with a minicomputer or high powered PC compatible computer. The rate table storage **62** can be a hard disc or any other type of large capacity data storage to keep track of all call rating device databases which subscribe to the rate network. The last modified storage **64** is a storage area where every modification to a database is stored to maintain a record of rate table modifications for each call rating device in the rate network.

The subscriber number storage **66** stores each telephone number associated with a call rating device, such as the telephone number associated with the debit telephone station illustrated in FIG. **1**. The transaction storage **68** maintains a record of which calling station has connected to the rate provider, and in conjunction with the processing unit **60**, verifies all transactions, tracks telephone numbers, and maintains records and information such as when respective call rating devices are scheduled to call the rate provider. A real time clock **70** properly synchronizes timing of the processing unit **60**. The rate provider also includes a network interface **72** such as a modem or (T1 lines in some instances) for communicating with the call rating device **10** via the phone network, or perhaps with leased modem or phone lines.

In accordance with the present invention, the call rating device may also communicate through a local area network, especially when the call rating device and rate provider are associated with personal computers. Two computers could be connected via a data transfer line and the call rating device updated. The personal computer associated with the call rating device could be used to input data to a private branch exchange or other similar exchange. Additionally, the call rating device could be associated with a call accounting system used with a LAN network.

In the illustrated aspect of the invention, the call rating device is associated with a calling station, the debit phone **14** of FIG. **1**, and connected by network interface **52** to the telephone network. The calling station at the appropriate predetermined time set by the rate provider calls a 900 number and connects to the rate provider. The calling station that calls the 900 number will automatically be billed, and the rate provider will obtain the funds back from the telephone company. Thus, the system can provide an automatic billing system, minimizing the amount of expensive and complex files that the rate provider would have to generate, such as those normally associated with "toll-free" 800 numbers.

FIG. **3** illustrates another block diagram where the debit phone is connected to a personal computer using modems for network interfaces.

Referring now to FIGS. **4–8**, there are illustrated flowcharts showing operation of the call rating device and the rate provider. In the description that follows, the call rating device is described with reference to the debit phone as illustrated in FIG. **1**. The rate provider is typically associated with a computer such as illustrated in FIG. **1**. The references for each block will be described starting from the numeral one hundred (**100**) and sequentially following with mainly even numbers.

As shown in FIG. **4**, in block **100**, the call rating device **10** at some frequent interval of time checks the date and time which are maintained by the real time clock **48**. Based on the data stored in miscellaneous storage **46**, the call rating device **10** in block **100** and **102** determines whether it is time to call the rate provider **30** to determine if an updated billing schedule is required. The frequency of calls made in block **100** and **102** can vary depending on the location of the call rating device and the type of associated equipment. If it is not time to call the rate provider, then the processor **40** checks to see whether it is time to use any new rate table (block **104**) which may be stored in the new rate table storage **44**. The rate table is replaced (block **105**) if changes are required. If changes to the new rate table (block **104**) are not required, the call rating device returns to normal processing (block **106**).

If it is time to call the rate provider, then the subroutine, "Check For Update " is followed (block **110**), and the rate provider is called (block **120**). Typically the modem is initialized and information is sent which includes: (1) the phone number associated with the calling station of the call rating device; (2) the current date and time; and (3) the date

and time when the current rate table was substituted for a previous autorate table or first used (block **114**).

The rate provider **30** receives the information sent by the call rating device **10**. An update flag is generated and signals the call rating device processor whether an update is required. The rate provider has the intelligent capability to determine when each call rating device associated with a calling station should make any calls so that the calls can be staggered. This is essential in a large network to prevent overloading the rate provider.

The block of information includes the current date and time and the date and time when the calling rating device should make the next call to the rate provider. In block **118**, the date and time of the next call is stored and the information received from the rate provider is checked to determine if the database stored in the call rating device should be updated. If the database should be updated, the subroutine "Get Update" is followed in block **122**.

In block **124** a determination is first made whether a device is required by a user before an update is requested or during transmission of any information between the call rating device and rate provider. For example, in the debit phone of FIG. **1**, if the customer requires use of the debit phone, and any data is being downloaded, then any data transfer is terminated so that the customer may use the phone (block **124***a*). If the call rating device is associated with a computer which must be used, the data transfer is terminated. In block **126** the data is received from the rate provider typically as a block of data or packet which can be transmitted over the telephone network. Typically, some protocol such as X modem, Y modem, Z modem could be used to insure accurate transfer.

In block **128**, if the transfer of information is not adequate, then a retry count is incremented (block **130**), and data transfer is retried once again. If there have been too many retries (block **132**) then a flag initiating termination of retries is established (block **134**) and return is made to normal processing (block **136**). The number of retries in block **132** can be set to a predetermined amount such as three or four retries. If the number of retries has not reached the maximum, the "Get Update" routine is initiated.

In block **137**, the transferred data is stored. If more data is required (block **137***a*), the "Get Update" subroutine is initiated. If more data is not required, the effective date and time is received (block **139**) and stored (block **139***a*). The processor initiates an "Update Okay" flag (block **140**) and return is made to the normal processing routine. If the update was not proper (FIG. **5**, block **150**), then the date and time of the next call is not changed. The call rating device will keep calling at the proper intervals of time until it receives an update. If the update is okay, then the date and time of the next call is stored (block **152**). After the date and time is stored in, normal processing occurs (block **154**).

Referring now to FIGS. **7** and **8**, the call processing routines for the rate provider **30** are illustrated. As shown in FIG. **7**, the rate provider receives the update request from the call rating device (block **160**). It receives 1) the calling station's phone number; 2) the date and time of the last update; and 3) the current date and time (block **162**). The rate provider saves that information (block **164**) and then determines if the calling station with associated call rating device is a valid subscriber to the rate network (block **166**). If the number is not a valid subscriber, the call is terminated (block **168**) and the rate provider then waits for the next update request from another calling station (block **170**).

If the number received is a number for a valid subscriber (block **166**), then the rate provider sends the date and time of the next call to be made by that particular calling station (block **172**). If a newer rate table is available, (block **173**), then an update flag is initiated by the processing unit of the rate provider (block **174**) and the update is sent, illustrated in the "Send Update" subroutine of FIG. **8**.

As shown in FIG. **8**, the block of data is retrieved such as from the hard disk (block **180**) and the block of data is sent over the telephone network (block **182**). If the data transfer is not proper (block **184**), such as if a pay phone has terminated data transfer, then the data block is sent again (block **182**). This loop may repeat for several instances.

If the data transfer is proper, then verification is made whether more data should be sent, (block **186**). If more data should be sent, then further data is retrieved and transferred (block **180**). If more data does not need to be transmitted, then the effective data and time is transmitted (block **188**) and the update information is saved (block **190**) and stored in the accounting or transactional database **68**. Processing then returns to normal routine (block **192**).

If a newer rate table is not available (block **174**), then an "Update Not Required" flag is initiated (block **194**) and the call is terminated. The rate provider then waits for the update request (block **170**) from another call rating device.

The method and system of the present invention is advantageous because the growing telephone network has seen the outgrowth of various options such as debit telephones and least cost routing devices, which house rate tables that can be updated. Use of the 900 service to call a rate provider will simplify billing procedures as compared to more complex 800 toll free services.

It is to be understood that the above description is only one embodiment of the invention. Numerous other arrangements may be devised by one skilled in the art without departing from the spirit and skill of the invention.

That which is claimed is:

1. A method for updating a database that stores billing rate parameters for a call rating device used for cost determinations for a calling station, comprising the steps of

connecting at a predetermined time and date via a data transfer line the call rating device to a rate provider having billing rate parameters for a plurality of calling stations,

transmitting over the data transfer line indicia identifying the call rating device and the date and time of the last update of the billing rate parameters,

verifying if billing rate parameters should be updated, and

transmitting from the rate provider to the call rating device the updated billing rate parameters when the rate provider determines that an update is required.

2. The method according to claim **1** wherein the step of connecting via a data transfer line includes the step of connecting the call rating device to a telephone network via a modem and calling the rate provider.

3. The method according to claim **2** wherein the call rating device comprises a pay telephone.

4. The method according to claim **3** including the step of terminating the transfer of information between the rate provider and the pay telephone when the pay telephone is to be used.

5. The method according to claim **1** including terminating any data transfer between the call rating device and the rate provider when the call rating device is to be used.

6. The method according to claim **1** including storing the updated billing rate parameters in the call rating device after receiving the billing rate parameters, and substituting the updated parameters into the database at a later predetermined time.

7. The method according to claim 1 including the step of reattempting data transfer from the rate provider to the call rating device if the initial rate data was not transferred properly, and terminating the reattempts to transfer data after a predetermined number of attempts to transfer data have been made.

8. The method according to claim 1 including the step or updating the time and date for connecting to the rate provider.

9. The method according to claim 1 including reattempting data transfer when the data has not transferred properly.

10. The method according to claim 1 wherein the connecting step of claim 1 includes the step of calling a 900 number.

11. A method for updating a database that stores billing rate parameters for a call rating device associated with a calling station operatively connected to a telephone network, comprising

calling at a predetermined date and time a rate provider having billing rate parameters for a plurality of calling stations so as to connect between the calling station with the associated call rating device and the rate provider,

transmitting over the telephone network to the rate provider the phone number of the calling station and the date and time of the last update of the billing rate parameters,

verifying if the billing rate parameters should be updated, and

transmitting over the telephone network to the calling station the updated billing rate parameters when the rate provider determines that a database update is required.

12. The method according to claim 11 including the step of calling the rate provider at regular intervals of time.

13. The method according to claim 11 including the step of receiving from the rate provider a calling station time schedule for calling the rate provider for updated billing rate information at a predetermined time.

14. The method according to claim 11 wherein the calling station comprises a pay telephone and including the step of terminating the transfer of information between the rate provider and the pay telephone when the pay telephone is to be used.

15. The method according to claim 11 including the step of verifying the accuracy of the transfer of information between the calling station and the rate provider.

16. The method according to claim 11 including the step of reattempting data transfer from the rate provider to the call rating device if the initial data was not transferred properly, and terminating the attempt to transfer data after a predetermined number of attempts to transfer data have been made.

17. The method according to claim 11 including the step of downloading the rate information to the database via a modem.

18. The method according to claim 11 wherein the call rating device comprises a least cost rating device.

19. The method according to claim 11 including storing the updated billing rate parameters in the call rating device after receiving the parameters, and substituting the updated parameters into the database at a later predetermined time.

20. The method according to claim 11 including the step of updating the time and date for connection to the rate provider.

21. The method according to claim 11 including reattempting data transfer when the data has not transferred properly.

22. The method according to claim 11 wherein the connecting step of claim 1 includes the step of calling a 900 number.

23. A method for updating subscriber databases that store billing rate parameters for call rate devices which are associated with respective subscriber calling stations operatively connected to a telephone network, comprising the steps of

each subscriber station calling at a scheduled time a rate provider having billing rate parameters for each calling station, wherein the scheduled time for each call is such that the calls from each calling station are substantially spaced apart in time from each other,

each station transmitting over the telephone network the respective phone number of its station and the date and time of the last update of the billing rate parameters,

verifying in the rate provider that an update is required, and

transmitting over the telephone network from the rate provider to the calling station the updated billing rate parameters when an update is required.

24. The method according to claim 23 including the step of calling the rate provider at regular intervals of time.

25. The method according to claim 23 including the step of receiving from the rate provider device a calling station time schedule for calling the rate provider for updated information.

26. The method according to claim 23 wherein the calling station comprises a pay telephone and including the step of terminating the transfer of information between the rate provider device and the pay telephone when the pay telephone is to be used.

27. The method according to claim 23 including the step of verifying the accuracy of the transfer of information between the calling station and the rate provider device.

28. The method according to claim 23 including the step of reattempting to transfer data from the rate provider to the calling station if the initial data was not transferred properly, and terminating the attempt to transfer data after a predetermined number of attempts to transfer data have been made.

29. The method according to claim 23 including the step of downloading the rate information to the database via a modem.

30. The method according to claim 23 including verifying that a calling party is a subscriber.

31. The method according to claim 23 including storing the updated billing rate parameters in the call rating device after receiving the update billing rate parameters, and substituting the updated billing rate parameters into the current database at a later predetermined time.

32. The method according to claim 23 including the step of updating the time and date for connecting to the rate provider.

33. The method according to claim 23 including the step of reattempting data transfer when the data has not transferred properly.

34. The method according to claim 23 wherein the connecting step of claim 24 includes the step of calling a 900 number.

35. A call rating updating system comprising

a call rating device, including a database that stores current updated billing rate parameters used for cost determinations for a calling station,

a data transfer line operatively connected to the call rating device,

means for transmitting over the data transfer line indicia information identifying the call rating device and update information identifying the last update of the billing rate parameters, and

a rate provider operatively connected to said data transfer line, said rate provider including

a) a database having updated billing rate parameters for a plurality of calling stations,

b) means for receiving the information from the call rating device,

c) means for verifying if billing rate parameters should be updated, and

d) means transmitting from the rate provider to the call rating device the updated billing rate parameters when the rate provider determines that an update is required.

36. The system according to claim **35** wherein said data transfer line comprises a switched communication path of a telephone network.

37. The system according to claim **35** wherein the call rating device comprises a pay telephone.

38. The system according to claim **35** including means for terminating the transfer of information between the rate provider and the call rating device when the device is to be used.

39. The system according to claim **35** wherein said call rating device comprises a least cost rating device.

40. The system according to claim **35** including modem means for connecting the call rating device and rate provider to the data transfer line.

41. The system according to claim **35** wherein said call rating device includes means for storing the updated billing rate parameters in the call rating device after receiving the updated billing rate parameters, and means for substituting the updated parameters into the current database at a later predetermined time.

42. The system according to claim **35** wherein the rate provider is connected via a 900 number.

43. A system for updating a database having billing rate parameters for determining the cost of telephone calls originating from a calling station to a destination calling station via a telephone network, comprising

a calling station operatively connected to the telephone network, and including database means associated with the calling station for storing billing rate parameters for determining the cost of the phone call, and including means for transmitting over the telephone network information identifying the phone number of the calling station and the date and time of the last update of the billing rate parameters,

rate providing means operatively connected to the phone network for storing billing rate parameters for calling stations, said rate providing means including means for receiving said information from the calling station, said rate providing means including:

a) control means for determining whether the calling party database should be updated, and

b) means for transmitting updated billing rate parameters to the calling party when an update is required.

44. The system according to claim **43** wherein the call rating device comprises a least cost rating device.

45. The system according to claim **43** wherein said means for transmitting information from the calling station includes a modem.

46. The system according to claim **43** wherein said means for transmitting updated billing rate parameters to the calling station includes a modem.

47. The system according to claim **43** wherein said calling station comprises a pay telephone, and including means for terminating any transfer of information between said pay telephone and said rate providing means when said pay telephone is to be used.

48. The system according to claim **43** wherein the rate provider is connected via a 900 number.

* * * * *

CIVIL COVER SHEET

The JS-44 civil cover sheet and the information contained herein neither replace nor supplement the filing and service of pleadings or other papers as required by law, except as provided by local rules of court. This form, approved by the Judicial Conference of the United States in September 1974, is required for the use of the Clerk of Court for the purpose of initiating the civil docket sheet. (SEE INSTRUCTIONS ON THE REVERSE OF THE FORM.)

I. (a) PLAINTIFFS

RATES TECHNOLOGY INC.

(b) COUNTY OF RESIDENCE OF FIRST LISTED PLAINTIFF _____
(EXCEPT IN U.S. PLAINTIFF CASES)

(c) ATTORNEYS (FIRM NAME, ADDRESS AND TELEPHONE NUMBER)
Mary B. Matterer
Morris James LLP
500 Delaware Avenue, Suite 1500
Wilmington, DE 19801
302-888-6800

DEFENDANTS

PRIMUS TELECOMMUNICATIONS, INC., and
PRIMUS TELECOMMUNICATIONS GROUP, INC.

COUNTY OF RESIDENCE OF FIRST LISTED DEFENDANT _____
(IN U.S. PLAINTIFF CASES ONLY).

ATTORNEYS (IF KNOWN)

II. BASIS OF JURISDICTION (PLACE AN "X" IN ONE BOX ONLY)

- ☐ 1 U.S. Government Plaintiff
- ☒ 3 Federal Question (U.S. Government Not a Party)
- ☐ 2 U.S. Government Defendant
- ☐ 4 Diversity (Indicate Citizenship of Parties in Item III)

III. CITIZENSHIP OF PRINCIPAL PARTIES (PLACE AN "X" IN ONE BOX FOR PLAINTIFF AND ONE BOX FOR DEFENDANT)
(For Diversity Cases Only)

	PTF	DEF		PTF	DEF
Citizen of This State	☐ 1	☐ 1	Incorporated *or* Principal Place of Business In This State	☐ 4	☐ 4
Citizen of Another State	☐ 2	☐ 2	Incorporated *and* Principal Place of Business In Another State	☐ 5	☐ 5
Citizen or Subject of a Foreign County	☐ 3	☐ 3	Foreign Nation	☐ 6	☐ 6

IV. ORIGIN (PLACE AN "X" IN ONE BOX ONLY)

☒ 1 Original Proceeding ☐ 2 Removed from State Court ☐ 3 Remanded from Appellate Court ☐ 4 Reinstated or Reopened ☐ 5 Transferred from another district (specify) ☐ 6 Multidistrict Litigation ☐ 7 Appeal to District Judge from Magistrate Judgment

V. NATURE OF SUIT (PLACE AN "X" IN ONE BOX ONLY)

CONTRACT
- ☐ 110 Insurance
- ☐ 120 Marine
- ☐ 130 Miller Act
- ☐ 140 Negotiable Instrument
- ☐ 150 Recovery of Overpayment & Enforcement of Judgment
- ☐ 151 Medicare Act
- ☐ 152 Recovery of Defaulted Student Loans (Excl. Veterans)
- ☐ 153 Recovery of Overpayment of Veteran's Benefits
- ☐ 160 Stockholders Suits
- ☐ 190 Other Contract
- ☐ 195 Contract Product Liability

REAL PROPERTY
- ☐ 210 Land Condemnation
- ☐ 220 Foreclosure
- ☐ 230 Rent Lease & Ejectment
- ☐ 240 Torts to Land
- ☐ 245 Tort Product Liability
- ☐ 290 All Other Real Property

TORTS

PERSONAL INJURY
- ☐ 310 Airplane
- ☐ 315 Airplane Product Liability
- ☐ 320 Assault, Libel & Slander
- ☐ 330 Federal Employers Liability
- ☐ 340 Marine
- ☐ 345 Marine Product Liability
- ☐ 350 Motor Vehicle
- ☐ 355 Motor Vehicle Product Liability
- ☐ 360 Other Personal Injury

PERSONAL INJURY
- ☐ 362 Personal Injury Med. Malpractice
- ☐ 365 Personal Injury – Product Liability
- ☐ 368 Asbestos Personal Injury Product Liability

PERSONAL PROPERTY
- ☐ 370 Other Fraud
- ☐ 371 Truth in Lending
- ☐ 380 Other Personal Property Damage
- ☐ 385 Property Damage Product Liability

CIVIL RIGHTS
- ☐ 441 Voting
- ☐ 442 Employment
- ☐ 443 Housing/ Accommodations
- ☐ 444 Welfare
- ☐ 440 Other Civil Rights

PRISONER PETITIONS
- ☐ 510 Motions to Vacate Sentence

HABEAS CORPUS:
- ☐ 530 General
- ☐ 535 Death Penalty
- ☐ 540 Mandamus & Other
- ☐ 550 Civil Rights
- ☐ 555 Prison Condition

FORFEITURE/PENALTY
- ☐ 610 Agriculture
- ☐ 620 Other Food & Drug
- ☐ 625 Drug Related Seizure of Property 21 USC 881
- ☐ 630 Liquor Laws
- ☐ 640 R. R. & Truck
- ☐ 650 Airline Regs.
- ☐ 660 Occupational Safety/Health
- ☐ 690 Other

LABOR
- ☐ 710 Fair Labor Standards Act
- ☐ 720 Labor/Mgmt Relations
- ☐ 730 Labor/Mgmt Reporting & Disclosure Act
- ☐ 740 Railway Labor Act
- ☐ 790 Other Labor Litigation
- ☐ 791 Empl. Ret. Inc Security Act

BANKRUPTCY
- ☐ 422 Appeal 28 USC 158
- ☐ 423 Withdrawal 28 USC 157

PROPERTY RIGHTS
- ☐ 820 Copyrights
- ☒ 830 Patent
- ☐ 840 Trademark

SOCIAL SECURITY
- ☐ 861 HIA (1395ff)
- ☐ 862 Black Lung (923)
- ☐ 863 DIWC/DIWW (405(g))
- ☐ 864 SSID Title XVI
- ☐ 865 RSI (405(g))

FEDERAL TAX SUITS
- ☐ 870 Taxes (U.S. Plaintiff or Defendant)
- ☐ 871 IRS – Third Party 26 USC 7609

OTHER STATUTES
- ☐ 400 State Reapportionment
- ☐ 410 Antitrust
- ☐ 430 Banks and Banking
- ☐ 450 Commerce/ICC Rates/etc.
- ☐ 460 Deportation
- ☐ 470 Racketeer Influenced and Corrupt Organizations
- ☐ 810 Selective Service
- ☐ 850 Securities/Commodities/ Exchange
- ☐ 875 Customer Challenge 12 USC 3410
- ☐ 891 Agricultural Arts
- ☐ 892 Economic Stabilization Act
- ☐ 893 Environmental Matters
- ☐ 894 Energy Allocation Act
- ☐ 895 Freedom of Information Act
- ☐ 900 Appeal of Fee Determination Under Equal Access to Justice
- ☐ 950 Constitutionality of State Statutes
- ☐ 890 Other Statutory Actions

VI. CAUSE OF ACTION (CITE THE U.S. CIVIL STATUTE UNDER WHICH YOU ARE FILING AND WRITE BRIEF STATEMENT OF CAUSE. DO NOT CITE JURISDICTIONAL STATUTES UNLESS DIVERSITY.)

Action for patent infringement under 35 U.S.C. §§ 271 et seq.

VII. REQUESTED IN COMPLAINT: ☐ CHECK IF THIS IS A **CLASS ACTION** UNDER F.R.C.P. 23 **DEMAND $** CHECK YES only if demanded in complaint: **JURY DEMAND:** ☒ YES ☐ NO

VIII. RELATED CASE(S) IF ANY (See instructions): JUDGE _____ DOCKET NUMBER _____ Rates Technology Inc. v. Qwest Communications Co, et al. – being filed concurrently – involves the same patents but with different defendants and different infringements

DATE

July 16, 2007

SIGNATURE OF ATTORNEY OF RECORD

FOR OFFICE USE ONLY

RECEIPT# _____ AMOUNT _____ APPLYING IFP _____ JUDGE _____ MAG. JUDGE _____

INSTRUCTIONS FOR ATTORNEYS COMPLETING CIVIL COVER SHEET FORM JS-44

Authority For Civil Cover Sheet

The JS-44 civil cover sheet and the information contained herein neither replaces nor supplements the filings and service of pleading or other papers as required by law, except as provided by local rules of court. This form, approved by the Judicial Conference of the United States in September 1974, is required for the use of the Clerk of Court for the purpose of initiating the civil docket sheet. Consequently a civil cover sheet is submitted to the Clerk of Court for each civil complaint filed. The attorney filing a case should complete the form as follows:

I. (a) Plaintiffs – Defendants. Enter names (last, first, middle initial) of plaintiff and defendant. If the plaintiff or defendant is a government agency, use only the full name or standard abbreviations. If the plaintiff or defendant is an official within a government agency, identify first the agency and then the official, giving both name and title.

(b) County of Residence. For each civil case filed, except U.S. plaintiff cases, enter the name of the county where the first listed plaintiff resides at the time of filing. IN U.S. plaintiff cases, enter the name of the county in which the first listed defendant resides at the time of filing. (NOTE: In land condemnation cases, the county of residence of the "defendant" is the location of the tract of land involved.)

(c) Attorneys. Enter the firm name, address, telephone number, and attorney of record. If there are several attorneys, list them on an attachment, noting in this section "(see attachment)".

II. Jurisdiction. The bases of jurisdiction is set forth under Rule 8(a).F.R.C.P., which requires that jurisdictions be shown in pleadings. Place an "X" in one of the boxes. If there is more than one basis of jurisdiction, precedence is given in the order shown below.

United States plaintiff. (1) Jurisdiction based on 28 U.S.C. 1345 and 1348. Suits by agencies and officers of the United States are included here.

United States defendant. (2) When the plaintiff is suing the United States, its officers or agencies, place an "X" in this box.

Federal question. (3) This refers to suits under 28 U.S.C. 1331, where jurisdiction arises under the Constitution of the United States, an amendment to the Constitution, an act of Congress or a treaty of the United States. In cases where the U.S. is a party, the U.S. plaintiff or defendant code takes precedence, and box 1 or 2 should be marked.

Diversity of citizenship. (4) This refers to suits under 28 U.S.C. 1332, where parties are citizens of different states. When Box 4 is checked, the citizenship of the different parties must be checked. (See Section III below: federal question actions take precedence over diversity cases.)

III. Residence (citizenship) of Principal Parties. This section of the JS-44 is to be completed if diversity of citizenship was indicated above. Mark this section for each principal party.

IV. Origin. Place an "X" in one of the seven boxes.

Original Proceedings. (1) Cases which originate in the United States district courts.

Removed from State Court. (2) Proceedings initiated in state courts may be removed to the district courts under Title 28 U.S.C., Section 1441. When the petition for removal is granted, check this box.

Remanded from Appellate Court. (3) Check this box for cases remanded to the district court for further action. Use the date of remand as the filing date.

Reinstated or Reopened. (4) Check this box for cases reinstated or reopened in the district court. Use the reopening date as the filing date.

Transferred from Another District. (5) For cases transferred under Title 28 U.S.C. Section 1404(a). Do not use this for within district transfers or multidistrict litigation transfers.

Multidistrict Litigation. (6) Check this box when a multidistrict case is transferred into the district under authority of Title 28 U.S.C. Section 1407. When this box is checked, do not check (5) above.

Appeal to District Judge from Magistrate Judgment. (7) Check this box for an appeal from a magistrate judge's decision.

V. Nature of Suit. Place an "X" in the appropriate box. If the nature of suit cannot be determined, be sure the cause of action, in Section IV above, is sufficient to enable the deputy clerk or the statistical clerks in the Administrative Office to determine the nature of suit. If the cause fits more than one nature of suit, select the most definitive.

VI. Cause of Action. Report the civil statute directly related to the cause of action and give a brief description of the cause.

VII. Requested in Complaint. Class Action. Place an "X" in this box if you are filing a class action under Rule 23.F.R.Cv.P.

Demand. In this space enter the dollar amount (in thousands of dollars) being demanded or indicate other demand such as a preliminary injunction.

Jury Demand. Check the appropriate box to indicate whether or not a jury is being demanded.

VIII. Related Cases. This section of the JS-44 is used to reference related pending cases in any. If there are related pending cases, insert the docket numbers and the corresponding judge names for such cases.

Date and Attorney Signature. Date and sign the civil cover sheet.

AO FORM 85 RECEIPT (REV. 9/04)

United States District Court for the District of Delaware

Civil Action No. 07-441-

FILED
CLERK U.S. DISTRICT COURT
DISTRICT OF DELAWARE
2007 JUL 16 PM 4:17

ACKNOWLEDGMENT OF RECEIPT FOR AO FORM 85

NOTICE OF AVAILABILITY OF A UNITED STATES MAGISTRATE JUDGE TO EXERCISE JURISDICTION

I HEREBY ACKNOWLEDGE RECEIPT OF 2 COPIES OF AO FORM 85.

7/16/07
(Date forms issued)

x Zach Horne
(Signature of Party or their Representative)

Z. Zach Horne
(Printed name of Party or their Representative)

Note: Completed receipt will be filed in the Civil Action