IN THE UNITED STATES DISTRICT COURT
FOR THE DISTRICT OF DELAWARE

RATES TECHNOLOGY INC., *Plaintiff,* v. QWEST COMMUNICATIONS CORPORATION AND QWEST COMMUNICATIONS INTERNATIONAL INC., *Defendants.*	Civil Action No. 1:07-cv-00442-JJF Filed: September 28, 2007

DECLARATION OF JACOB K. BARON, ESQ. IN SUPPORT OF DEFENDANTS' MOTION TO DISMISS PLAINTIFF'S COMPLAINT OR, IN THE ALTERNATIVE, FOR A STAY PENDING REEXAMINATION OF U.S. PATENT NO. 5,425,085

I, Jacob K. Baron, Esq., do hereby depose and state the following:

1. I am an attorney licensed to practice in the Commonwealth of Massachusetts and the State of New York and I am an associate with the law firm Proskauer Rose LLP which represents Defendants Qwest Communications Corporation and Qwest Communications International Inc.

2. I am providing this Declaration on behalf of the Defendants' Motion To Dismiss Plaintiff's Complaint Or, In The Alternative, For A Stay Pending Reexamination Of U.S. Patent No. 5,425,085, dated September 28, 2007.

3. Attached hereto as Exhibit A is a true and correct copy of the Request for *Ex Parte* Reexamination received by the United States Patent and Trademark Office ("PTO") on February 14, 2006.

4. Attached hereto as Exhibit B is a true and correct copy of the Office Action mailed to RTI by the PTO on May 21, 2007 pursuant to reexamination of the '085 Patent rejecting claims 1-5, 7-11, 13-16, 18, 19, and 22-26 of the '085 Patent as invalid under 35 U.S.C. § 102(b), and claims 12, 20 and 21 of the '085 Patent invalid under 35 U.S.C. § 103(a) ("PTO Reexamination Action").

5. Attached hereto as Exhibit C is a true and correct copy of RTI's Response to the PTO Reexamination Action, dated June 21, 2007.

6. Attached hereto as Exhibit D is a true and correct copy of PTO *Ex Parte* Reexamination Filing Data, dated March 31, 2006.

7. Attached hereto as Exhibit E are true and correct copies of Orders issued in *Alcatel Internetworking, Inc. v. Rates Technology Inc, et al*, C.D. Cal. C.A. 2:03cv09449. Attached are:

- D.I. No. 61, Nov. 10, 2004 Order Granting Plaintiffs Motion to Compel;
- D.I. No. 82, Dec. 6, 2004 Order Granting Plaintiff's Ex Parte Application for An Order Compelling Compliance with Previous Court Order;
- D.I. No. 93, Dec. 17, 2004 Order Overruling RTI's Objection to Court Order;
- D.I. No. 276, Mar. 8, 2006 Order Granting Plaintiff's Motion to Compel; and
- D.I. No. 302, Apr. 21, 2006 Order Compelling Production.

8. Attached hereto as Exhibit F is a true and correct copy of RTI's Memorandum of Law In Support of Cross-Motion For Summary Judgment On Claim Construction in *MediaCom Corp. v. Rates Tech. Inc.*, No. 97-10559-WGY (D. Mass. Mar. 22, 1999).

9. Attached hereto as Exhibit G is a true and correct copy of U.S. Patent No. 5,425,085.

10. Attached hereto as Exhibit H is a true and correct copy of U.S. Patent No. 5,519,769.

11. Attached hereto as Exhibit I is a true and correct copy of the Declaration of Joseph A. Scivicque dated September 28, 2007.

I declare under penalty of perjury that the foregoing is true and correct.

Executed on September 28, 2007

Signature: 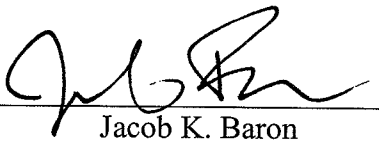

Jacob K. Baron

Exhibit A

Civil Action No. 1:07-cv-00442-JJF

71338 Doc Code: + U.S. PTO

PTO/SB/57 (04-05)
Approved for use through 04/30/2007. OMB 0651-0033
U.S. Patent and Trademark Office; U.S. DEPARTMENT OF COMMERCE
Under the Paperwork Reduction Act of 1995, no persons are required to respond to a collection of information unless it displays a valid OMB control number.

(Also Applicable to PTO FORM PTO - 1465)

71338 U.S. PTO
02/14/06 90007939

REQUEST FOR *EX PARTE* REEXAMINATION TRANSMITTAL FORM

02/14/06

Address to:

Mail Stop *Ex Parte* Reexam
Commissioner for Patents
P.O. Box 1450
Alexandria, VA 22313-1450

Attorney Docket No. 61749/4

Date: February 14, 2006

1. ☒ This is a request for ex *parte* reexamination pursuant to 37 CFR 1.510 of patent number 5,425,085 issued June 13, 1995. The request is made by:

   ☐ patent owner. ☒ third party requester.

2. ☒ The name and address of the person requesting reexamination is:
   Simpliphones, Inc.
   1120 South 1680 West
   Orem, UT 84058

3. ☐ a. A check in the amount of $ _____ is enclosed to cover the reexamination fee, 37 CFR 1.20(c)(1);

   ☐ b. The Director is hereby authorized to charge the fee as set forth in 37 CFR 1.20(c)(1) to Deposit Account No. _____ (submit duplicative copy for fee processing); or

   ☒ c. Payment by credit card. Form PTO-2038 is attached.

4. ☒ Any refund should be made by ☐ check or ☒ credit to Deposit Account No. 50-2375. 37 CFR 1.26(c). If payment is made by credit card, refund must be to credit card account.

5. ☒ A copy of the patent to be reexamined having a double column format on one side of a separate paper is enclosed. 37 CFR 1.510(b)(4)

6. ☐ CD-ROM or CD-R in duplicate, Computer Program (Appendix) or large table
   ☐ Landscape Table on CD

7. ☐ Nucleotide and/or Amino Acid Sequence Submission
   If applicable, items a. - c. are required.
   a. ☐ Computer Readable Form (CRF)
   b. Specification Sequence Listing on:
      i ☐ CD-ROM (2 copies) or CD-R (2 copies); **or**
      ii ☐ paper
   c. ☐ Statements verifying identity of above copies

8. ☒ A copy of any disclaimer, certificate of correction or reexamination certificate issued in the patent is included.

9. ☒ Reexamination of claim(s) 1-26 is requested. TRCDOUGA 00000062 90007939

10. ☒ A copy of every patent or printed publication relied upon is submitted herewith including a listing thereof on Form PTO/SB/08, PTO-1449, or equivalent. 2520.00 OP

11. ☐ An English language translation of all necessary and pertinent non-English language patents and/or printed publications is included.

This collection of information is reequired by 37 CFR 1.510. The information is required to obtain or retain a benefit by the public which is to file (and by the USPTO to process) an application. Confidentiality is governed by 35 U.S.C. 122 and 37 CFR 1.11 and 1.14. This collection is estimated to take 2 hours to complete, including gathering, preparing, and submitting the completed application form to the USPTO. Time will vary depending upon the individual case. Any comments on the amount of time you require to complete this form and/or suggestions for reducing this burden, should be sent to the Chief Information Officer, U.S. Patent and Trademark Office, U.S. Department of Commerce, P.O. Box 1450, Alexandria, VA 22313-1450. DO NOT SEND FEES OR COMPLETED FORMS TO THIS ADDRESS. **SEND TO: Mail Stpe *Ex Parte* Reexam, Commissioner for Patents, P.O. Box 1450, Alexandria, VA 22313-1450.**

If you need assistance in completing the form, call 1-800-PTO-9199 and select option 2.

Doc Code: +

PTO/SB/57 (04-05)
Approved for use through 04/30/2007. OMB 0651-0033
U.S. Patent and Trademark Office; U.S. DEPARTMENT OF COMMERCE
Under the Paperwork Reduction Act of 1995, no persons are required to respond to a collection of information unless it displays a valid OMB control number.

12. ☒ The attached detailed request includes at least the following items:
    a. A statement identifying each substantial new question of patentability based on prior patents and printed publications. 37 CFR 1.510(b)(1)
    b. An identification of every claim for which reexamination is requested, and a detailed explanation of the pertinency and manner of applying the cited art to every claim for which reexamination is requested. 37 CFR 1.510(b)(2)

13. ☐ A proposed amendment is included (only where the patent owner is the requester). 37 CFR 1.510(e)

14. ☒ a. It is certified that a copy of this request (if filed by other than the patent owner) has been served in its entirety on the patent owner as provided in 37 CFR 1.33(c).
The name and address of the party served and the date of service are:

Robert Epstein
EPSTEIN DRANGEL BAZERMAN & JAMES, LLP
60 East 42nd Street, Suite 820 New York, NY 10165

Date of Service: February 14, 2006; or

☐ b. A duplicate copy is enclosed since service on patent owner was not possible.

15. ☐ Correspondence Address: Direct all communication about the reexamination to:

☒ The address associated with Customer Number: 32642

OR

☐ Firm or Individual Name					
Address					
City		State		Zip	
Country					
Telephone		Email			

16. ☒ The patent is currently the subject of the following concurrent proceeding(s):
    ☐ a. Copending reissue Application No. _____.
    ☐ b. Copending reexamination Control No. _____.
    ☐ c. Copending Interference No. _____.
    ☑ d. Copending litigation styled:

See Continuation Sheet

WARNING: Information on this form may become public. Credit card information should not be included on this form. Provide credit card information and authorization on PTO-2038.

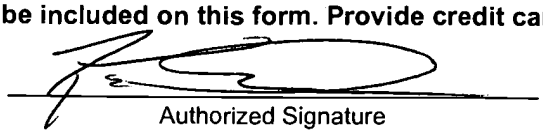

Authorized Signature — 2/14/06 — Date

Kory D. Christensen — Typed/Printed Name
43,548 — Registration No.

☐ For Patent Owner Requester
☑ For Third Party Requester

Continuation Sheet

Copending Litigation

Rates Technology Inc. v. Simpligent, LLC
U.S. District Court, Eastern District of New York, Civil Action No.: 05-CV-2729

Rates Technology Inc. v. Cablevision Systems Corp.
U.S. District Court, Eastern District of New York, Civil Action No.: 05-CV-3583

Rates Technology v. Mediatrix Telcom Inc.
U.S. District Court, Eastern District of New York, Civil Action No.: 05-CV-2755

Rates Technology Inc. v. Telegen Corp.
U.S. District Court, Eastern District of New York, Civil Action No.: 01-CV-5319

Rates Technology Inc. v. Alcatel S A et al.
U.S. District Court, Central District of California, Civil Action No.: 05-CV-6459

Rates Technology Inc. v. Google Inc.
U.S. District Court, Eastern District of New York, Civil Action No.: 05-CV-4703

Rates Technology Inc. v. Vonage America, Inc. et al.
U.S. District Court, Eastern District of New York, Civil Action No.: 05-CV-4727

Rates Technology Inc. v. Uniden America Corp. et al.
U.S. District Court, Eastern District of New York, Civil Action No.: 05-CV-5982

Doc Code: +

PTO/SB/57 (04-05)
Approved for use through 04/30/2007. OMB 0651-0033
U.S. Patent and Trademark Office; U.S. DEPARTMENT OF COMMERCE

71338 U.S. PTO

Under the Paperwork Reduction Act of 1995, no persons are required to respond to a collection of information unless it displays a valid OMB control number.

02/14/06

(Also referred to as FORM PTO - 1465)

REQUEST FOR *EX PARTE* REEXAMINATION TRANSMITTAL FORM

71338 U.S. PTO
90007939

02/14/06

Address to:

Mail Stop *Ex Parte* Reexam
Commissioner for Patents
P.O. Box 1450
Alexandria, VA 22313-1450

Attorney Docket No. 61749/4

Date: February 14, 2006

1. ☒ This is a request for *ex parte* reexamination pursuant to 37 CFR 1.510 of patent number 5,425,085 issued June 13, 1995. The request is made by:

   ☐ patent owner. ☒ third party requester.

2. ☒ The name and address of the person requesting reexamination is:
   Simpliphones, Inc.
   1120 South 1680 West
   Orem, UT 84058

3. ☐ a. A check in the amount of $ _____ is enclosed to cover the reexamination fee, 37 CFR 1.20(c)(1);

   ☐ b. The Director is hereby authorized to charge the fee as set forth in 37 CFR 1.20(c)(1) to Deposit Account No. _____ (submit duplicative copy for fee processing); or

   ☒ c. Payment by credit card. Form PTO-2038 is attached.

4. ☒ Any refund should be made by ☐ check or ☒ credit to Deposit Account No. 50-2375. 37 CFR 1.26(c). If payment is made by credit card, refund must be to credit card account.

5. ☒ A copy of the patent to be reexamined having a double column format on one side of a separate paper is enclosed. 37 CFR 1.510(b)(4)

6. ☐ CD-ROM or CD-R in duplicate, Computer Program (Appendix) or large table
   ☐ Landscape Table on CD

7. ☐ Nucleotide and/or Amino Acid Sequence Submission
   If applicable, items a. - c. are required.
   a. ☐ Computer Readable Form (CRF)
   b. Specification Sequence Listing on:
      i ☐ CD-ROM (2 copies) or CD-R (2 copies); **or**
      ii ☐ paper
   c. ☐ Statements verifying identity of above copies

8. ☒ A copy of any disclaimer, certificate of correction or reexamination certificate issued in the patent is included.

9. ☒ Reexamination of claim(s) 1-26 is requested.

10. ☒ A copy of every patent or printed publication relied upon is submitted herewith including a listing thereof on Form PTO/SB/08, PTO-1449, or equivalent.

11. ☐ An English language translation of all necessary and pertinent non-English language patents and/or printed publications is included.

This collection of information is reequired by 37 CFR 1.510. The information is required to obtain or retain a benefit by the public which is to file (and by the USPTO to process) an application. Confidentiality is governed by 35 U.S.C. 122 and 37 CFR 1.11 and 1.14. This collection is estimated to take 2 hours to complete, including gathering, preparing, and submitting the completed application form to the USPTO. Time will vary depending upon the individual case. Any comments on the amount of time you require to complete this form and/or suggestions for reducing this burden, should be sent to the Chief Information Officer, U.S. Patent and Trademark Office, U.S. Department of Commerce, P.O. Box 1450, Alexandria, VA 22313-1450. DO NOT SEND FEES OR COMPLETED FORMS TO THIS ADDRESS. **SEND TO: Mail Stpe *Ex Parte* Reexam, Commissioner for Patents, P.O. Box 1450, Alexandria, VA 22313-1450.**

If you need assistance in completing the form, call 1-800-PTO-9199 and select option 2.

Doc Code: +

PTO/SB/57 (04-05)
Approved for use through 04/30/2007. OMB 0651-0033
U.S. Patent and Trademark Office; U.S. DEPARTMENT OF COMMERCE
Under the Paperwork Reduction Act of 1995, no persons are required to respond to a collection of information unless it displays a valid OMB control number.

12. ☒ The attached detailed request includes at least the following items:
   a. A statement identifying each substantial new question of patentability based on prior patents and printed publications. 37 CFR 1.510(b)(1)
   b. An identification of every claim for which reexamination is requested, and a detailed explanation of the pertinency and manner of applying the cited art to every claim for which reexamination is requested. 37 CFR 1.510(b)(2)

13. ☐ A proposed amendment is included (only where the patent owner is the requester). 37 CFR 1.510(e)

14. ☒ a. It is certified that a copy of this request (if filed by other than the patent owner) has been served in its entirety on the patent owner as provided in 37 CFR 1.33(c).
The name and address of the party served and the date of service are:
Robert Epstein
EPSTEIN DRANGEL BAZERMAN & JAMES, LLP
60 East 42nd Street, Suite 820 New York, NY 10165

Date of Service: **February 14, 2006**; or

☐ b. A duplicate copy is enclosed since service on patent owner was not possible.

15. ☐ Correspondence Address: Direct all communication about the reexamination to:

☒ The address associated with Customer Number: **32642**

OR

☐ Firm or Individual Name					
Address					
City		State		Zip	
Country					
Telephone		Email			

16. ☒ The patent is currently the subject of the following concurrent proceeding(s):
   ☐ a. Copending reissue Application No. _____.
   ☐ b. Copending reexamination Control No. _____.
   ☐ c. Copending Interference No. _____.
   ☑ d. Copending litigation styled:
   See Continuation Sheet

WARNING: Information on this form may become public. Credit card information should not be included on this form. Provide credit card information and authorization on PTO-2038.

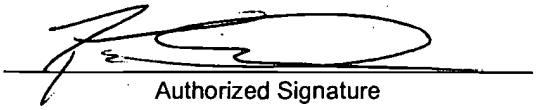

Authorized Signature — Date: 2/14/06

Kory D. Christensen — Typed/Printed Name

43,548 — Registration No.

☐ For Patent Owner Requester
☑ For Third Party Requester

Continuation Sheet

Copending Litigation

Rates Technology Inc. v. Simpligent, LLC
U.S. District Court, Eastern District of New York, Civil Action No.: 05-CV-2729

Rates Technology Inc. v. Cablevision Systems Corp.
U.S. District Court, Eastern District of New York, Civil Action No.: 05-CV-3583

Rates Technology v. Mediatrix Telcom Inc.
U.S. District Court, Eastern District of New York, Civil Action No.: 05-CV-2755

Rates Technology Inc. v. Telegen Corp.
U.S. District Court, Eastern District of New York, Civil Action No.: 01-CV-5319

Rates Technology Inc. v. Alcatel S A et al.
U.S. District Court, Central District of California, Civil Action No.: 05-CV-6459

Rates Technology Inc. v. Google Inc.
U.S. District Court, Eastern District of New York, Civil Action No.: 05-CV-4703

Rates Technology Inc. v. Vonage America, Inc. et al.
U.S. District Court, Eastern District of New York, Civil Action No.: 05-CV-4727

Rates Technology Inc. v. Uniden America Corp. et al.
U.S. District Court, Eastern District of New York, Civil Action No.: 05-CV-5982

IN THE UNITED STATES PATENT AND TRADEMARK OFFICE

REQUEST FOR REEXAMINATION OF:
U.S. PATENT NO. 5,425,085

Mail Stop *Ex Parte* Reexam
Commissioner for Patents
P.O. Box 1450
Alexandria, VA 22313-1450

Sir:

Reexamination under 35 U.S.C. §§ 302-307 and 37 C.F.R. § 1.510 is requested of United States Patent No. 5,425,085, which issued on June 13, 1995 to Gerald J. Weinberger et al. (the "Weinberger Patent"). The Weinberger Patent is still enforceable. A copy of this patent is attached herewith.

I. Claims for which Reexamination is Requested

Reexamination is requested of claims 1-26 of the Weinberger Patent, as set forth below. Each of the references mentioned below is listed on the attached Information Disclosure Statement form and copies of each such reference are also enclosed.

Reexamination is requested of claims 1-5, 7-10, and 13 of the Weinberger Patent in view of the prior art publication titled "Starplus SPX: General Description Installation and Maintenance Manual," published by Vodavi Communication Systems and dated September, 1990 ("Vodavi").

Reexamination is also requested of claims 1-5, 7-10, and 13 of the Weinberger Patent in view of the prior art publication titled "Strata DK8 & DK16: Digital Key Telephone System General Description," published by Toshiba America Information Systems, Inc. and dated March, 1993 ("Toshiba").

Reexamination is also request of claims 1-5, 7-10, 13-16, 18, 19, and 22-26 of the Weinberger Patent in view of the prior art publication titled "ISOETEC System/228: Technical Manual" published by ISOETEC Communications, Inc. and dated July, 1988 ("Isoetec").

Reexamination is also requested of claims 1, 2, 5, 7, and 10 of the Weinberger Patent in view of the earlier UK Patent Application No. 2,218,595 of STC PLC published on November 15, 1989 ("STC").

Reexamination is further requested of claims 1-5 and 7-11 of the Weinberger Patent in view of the earlier U.S. Patent No. 5,173,933 issued on December 22, 1992 to Jabs et al. ("Jabs").

Reexamination is additionally requested of claims 6, 12, 17, and 21 of the Weinberger Patent in view of Vodavi, Toshiba, Isoetec, Jabs, and/or STC.

Finally, reexamination is requested of claim 20 of the Weinberger Patent in view of Isoetec in further view of Jabs.

II. Statement Pointing Out Substantial New Question of Patentability

Each of the prior art references referred to in the claim charts above—Vodavi, Toshiba, Isoetec, Jabs and STC—**were not of record in the file of the Weinberger Patent**. Notably, STC was cited in a patentability report received by the Weinberger Patent assignee in connection with its corresponding PCT application. *See* European Search Report dated September 1, 1998 (attached hereto as **Exhibit A**). Although the owner of the Weinberger Patent was therefore aware of STC at least as early as September, 1998, it failed to cited this reference to the United States Patent and Trademark Office during previous reexamination proceedings initiated by an order dated November 5, 1999 granting a request for reexamination. These prior reexamination proceedings were terminated after the submission of a declaration swearing behind the references cited in the aforementioned order. None of the references cited in the present Request for Reexamination are similarly susceptible to being sworn behind, as each of these references was published well before the critical date of March 18, 1993 (one year prior to the filing date of the Weinberger Patent).

As demonstrated in the claim charts set forth below, each of claims 1-26 is not patentable over these prior art documents. As such, a substantial new question of patentability is raised. Further, these prior art documents provide teachings not provided to the Patent Office during prosecution of the Weinberger Patent. It is respectfully submitted that these new prior art references create a substantial new question of patentability with respect to each of claims 1-26 and further that each of claims 1-26 should be rejected as unpatentable over the prior art cited herein.

III. Explanation of Pertinency and Manner of Applying Cited Prior Art to Every Claim for Which Reexamination is Requested

A. Claim 1

Claim 1 of the Weinberger Patent is considered to be fully anticipated under 35 U.S.C. § 102 by the Vodavi prior art publication. **Vodavi was not relied upon or cited during the prosecution of the Weinberger Patent**

Claim 1 of the Weinberger Patent is also considered to be fully anticipated under 35 U.S.C. § 102 by the Toshiba prior art publication. **Toshiba was not relied upon or cited during the prosecution of the Weinberger Patent.**

Claim 1 of the Weinberger Patent is also considered to be fully anticipated under 35 U.S.C. § 102 by the ISOETEC prior art publication. **Isoetec was not relied upon or cited during the prosecution of the Weinberger Patent.**

Claim 1 of the Weinberger Patent is also considered to be fully anticipated under 35 U.S.C. § 102 by STC. **STC was not relied upon or cited during the prosecution of the Weinberger Patent.**

Claim 1 of the Weinberger Patent is further considered to be fully anticipated under 35 U.S.C. § 102 by Jabs. **Jabs was not relied upon or cited during the prosecution of the Weinberger Patent.**

Claim or Claim Element	Prior Art (Vodavi)
1. A device for routing telephone calls along a least cost route originating from a first telephone to a second telephone having an associated telephone number via a network having a plurality of alternate communication switch paths corresponding to different carriers which can be chosen to route the call and normally providing a current to said first telephone when said first telephone is in use, comprising	Vodavi discloses a device (the "Vodavi device") for routing telephone calls along a least cost route originating from a first telephone to a second telephone having an associated telephone number. *See, e.g.*, page 200-8; page 300-5 (Least Cost Routing). Vodavi provides least cost routing via a network having a plurality of alternate communication switch paths corresponding to different carriers which can be chosen to route the call. *See id.* The Vodavi device also provides a current to the telephone when it is in use. *See, e.g.*, page 500-18 ("[T]he second pair [of wires] supplies the 24 volts.").

a housing forming an enclosure and comprising first jack means for connection to said first telephone and second jack means for connection to said network	The Vodavi device has a housing forming an enclosure. A picture of the Vodavi housing is shown on page 500-2. The Vodavi device also has jack means for connection to telephones (pages 400-10 and 400-11) and jack means for connection to a network (pages 400-6 through 400-9).
switch means operatively connected to said first jack means for disconnecting said first telephone from said network,	The Vodavi device includes switch means operatively connected to the jack means for connection to telephones for disconnecting a telephone from the network. *See, e.g.,* page 100-1 ("The system provides . . . traditional communication functions (voice, data transmission and **switching**)") (emphasis added); page 400-5 ("The MISB contains the PCM Highway switch and is responsible for all voice switching."); page 500-16 (depicting a telephone being disconnected from the network via a switch during a power failure).
means operatively connected to said switch means for generating a current through said switch means to the first telephone, corresponding to a current provided by said network,	The Vodavi device provides a current to the telephone, corresponding to a current provided by the network. *See, e.g.,* page 410-1 ("Data and power are provided to the electronic phones through two pair, twisted cable.").
database means for storing billing rate parameters for determining a least cost communication path for call corresponding to said telephone number,	The Vodavi device provides a database for storing billing rate parameters for determining a least cost communication path for placing a call in Section 660 ("LCR [Least Cost Routing] Programming"). *See also* page 300-5 (describing Least Cost Routing functionality; "The Least Cost Routing (LCR) feature allows for the automatic selection of the most economical trunk according to the number dialed and the time of day/day of the week."); page 200-8.

means operatively connected to said switch means for detecting and storing said telephone number originating from the first telephone,	The Vodavi device includes the ability to detect and store the outgoing telephone number, *see, e.g.*, page 300-5 ("The digits following the access code are accumulated and analyzed as they are dialed."), which is operative linked to the switch means, *see, e.g.*, page 400-5 (The MISB contains the PCM Highway switch and is responsible for all voice switching.").
means for addressing said database means for identifying a plurality of communication switch paths to said second telephone and the cost rate of each path,	The Vodavi device includes the ability to address the database and identify a plurality of communication switch paths to the second telephone and the cost rate of each path. *See, e.g.*, page 300-5 ("When enough digits have been dialed and analyzed to select a route, the appropriate route list entry from that route is determined by the time of day/day of week"; "The Least Cost Routing (LCR) feature allows for the automatic selection of the most economical trunk according to the number dialed and the time of day/day of the week.").
means for comparing the cost rate of each path so as to determine a least cost route, and	The Vodavi device includes the ability to compare the cost rate of each path and determine a least cost route. *See, e.g.*, page 300-5 ("The Least Cost Routing (LCR) feature allows for the automatic selection of the most economical trunk according to the number dialed and the time of day/day of the week."); page 200-8.

means operatively connected to said switch means and said second jack means for generating a number sequence corresponding to a desired carrier so that said call is routed through said second jack means to the selected communication path and carrier to establish a switched connection between said first telephone and said second telephone phone.	The Vodavi device includes the ability to generate a number sequence corresponding to a desired carrier to route the call through the network jack means to the selected communication path and carrier to establish a switched connection between two telephones. *See, e.g.*, page 300-5 ("The digits following the access code are accumulated and analyzed as they are dialed. … When enough digits have been dialed and analyzed to select a route, the appropriate route list entry from that route is determined by the time of day/day of week. … The dialed digits (or modified dialed digits) are outpulsed on the trunk."); page 200-8 ("Digit Insertion and Deletion – The dialed digits may be modified by pre-insertion, post-insertion or deletion of digits to produce the digit stream that is actually out-pulsed on the trunk.").

Claim or Claim Element	Prior Art (Toshiba)
1. A device for routing telephone calls along a least cost route originating from a first telephone to a second telephone having an associated telephone number via a network having a plurality of alternate communication switch paths corresponding to different carriers which can be chosen to route the call and normally providing a current to said first telephone when said first telephone is in use, comprising	Toshiba discloses a device (the "Toshiba device") for routing telephone calls along a least cost route originating from a first telephone to a second telephone having an associated telephone number. *See, e.g.*, page 2-28 ("LCR [Least Cost Routing] can select the most economical route, helping save money."). Toshiba provides least cost routing via a network having a plurality of alternate communication switch paths corresponding to different carriers which can be chosen to route the call. *See id*; page 2-32 ("The purpose of the plan scheme is to provide the system with directions for routing all possible calls, made by all possible users at all possible times of day. Eight separate plans provide the customer flexibility enough to route different area codes and exception office codes over different CO line groups."). One having ordinary skill in the art would appreciate that the Toshiba device also inherently provides a current to the telephone when it is in use.
a housing forming an enclosure and comprising first jack means for connection to said first telephone and second jack means for connection to said network	The Toshiba device has a housing forming an enclosure. A picture of the Toshiba housing with key components labeled is provided on page 8 of the "General Description" section. The picture on page 8 also illustrates jacks for connection to telephones (J6-25 Amphenol Jack) and for connection to a network (modular jacks). The diagram on page 6 of this section further describes jack means for connection to telephones and to a network.

switch means operatively connected to said first jack means for disconnecting said first telephone from said network,	The Toshiba device includes switch means (a relay) operatively connected to a telephone jack (a TIP/RING connection) for disconnecting a telephone from the network. *See, e.g.*, Figure 4-5 on page 4-7.
means operatively connected to said switch means for generating a current through said switch means to the first telephone, corresponding to a current provided by said network,	The Toshiba device provides a current to the telephone, corresponding to a current provided by the network. *See, e.g.*, General Description, page 6 (Figure 7) (showing "QPSU8 POWER SUPPLY" connected to a variety of telephone devices, including "standard telephone").
database means for storing billing rate parameters for determining a least cost communication path for call corresponding to said telephone number,	The Toshiba device provides a database for storing billing rate parameters for determining a least cost communication path for placing a call. *See, e.g.*, page 2-28 ("LCR [Least Cost Routing] General Parameters. Enables features including . . . the Long Distance Information dialing plan."); page 2-29 (Figure 2-1) ("System analyzes telephone number, and checks it against most Program 50 options" including "LCR Parameters ... LCR Long Distance Information Plan Number"); page 2-28 ("LCR [Least Cost Routing] can select the most economical route, helping save money.").
means operatively connected to said switch means for detecting and storing said telephone number originating from the first telephone,	The Toshiba device includes the ability to detect and store the outgoing telephone number. *See, e.g.*, page 2-29 (Figure 2-1) ("System analyzes telephone number . . . ."; "System selects a CO line and dials number.").
means for addressing said database means for identifying a plurality of communication switch paths to said second telephone and the cost rate of each path,	The Toshiba device includes the ability to address the database and identify a plurality of communication switch paths to the second telephone and the cost rate of each path. *See, e.g.*, page 2-29 (Figure 2-1).

means for comparing the cost rate of each path so as to determine a least cost route, and	The Toshiba device includes the ability to compare the cost rate of each path and determine a least cost route. *See, e.g.*, page 2-29 (Figure 2-1); page 2-28 ("LCR [Least Cost Routing] can select the most economical route, helping save money.").
means operatively connected to said switch means and said second jack means for generating a number sequence corresponding to a desired carrier so that said call is routed through said second jack means to the selected communication path and carrier to establish a switched connection between said first telephone and said second telephone phone.	The Toshiba device includes the ability to generate a number sequence corresponding to a desired carrier to route the call through the network jack means to the selected communication path and carrier to establish a switched connection between two telephones. *See, e.g.*, page 2-29 (Figure 2-1); page 2-28 ("Carrier codes can be programmed to dial automatically when a call is placed over the appropriate route. Digits can be added to the front or back . . . to make placing calls an invisible process . . . .").

Claim or Claim Element	**Prior Art (Isoetec)**
1. A device for routing telephone calls along a least cost route originating from a first telephone to a second telephone having an associated telephone number via a network having a plurality of alternate communication switch paths corresponding to different carriers which can be chosen to route the call and normally providing a current to said first telephone when said first telephone is in use, comprising	Isoetec discloses a device (the "Isoetec device") for routing telephone calls along a least cost route originating from a first telephone to a second telephone having an associated telephone number. *See, e.g.*, page 10.1 (Least Cost Routing). The Isoetec device provides least cost routing via a network having a plurality of alternate communication switch paths corresponding to different carriers which can be chosen to route the call. *See id.* Isoetec also discloses normally providing a current to said first telephone when in use. *See, e.g.*, page TS.1 ("Data and power are provided to the key phones through two pair, random twisted cable.").

a housing forming an enclosure and comprising first jack means for connection to said first telephone and second jack means for connection to said network	The Isoetec device has a housing forming an enclosure. A picture of the Isoetec housing (228 Cabinet) is shown on page 3.2 (Figure 3-1). The Isoetec device also has jack means for connection to telephones (page 3.6) and jack means for connection to a network (pages 3.8 through 3.9).
switch means operatively connected to said first jack means for disconnecting said first telephone from said network,	The Isoetec device includes means for switching (disconnecting) its telephones from the network. *See, e.g.*, page 1.8 ("The voice control module [ ] contains the circuitry necessary for voice switching and conference connections.").
means operatively connected to said switch means for generating a current through said switch means to the first telephone, corresponding to a current provided by said network,	The Isoetec device includes means for providing a current to energize the telephones. *See, e.g.*, page TS.1 ("Data and power are provided to the key phones through two pair, random twisted cable."); page 1.16 ("Power Supplies").
database means for storing billing rate parameters for determining a least cost communication path for call corresponding to said telephone number,	The Isoetec device provides a database for storing billing rate parameters for determining a least cost communication path for placing a call in Section 10, titled Least Cost Routing (page 10.1 *et seq.*) ("Least Cost Routing (LCR) . . . automatically selects the least expensive available route for an outside line call.") ("A Customized Data Base. ... This information includes number and types of facilities and services used . . . ."). The Isoetec database is pre-configured to the customer's requirements. *See id.*

means operatively connected to said switch means for detecting and storing said telephone number originating from the first telephone,	The Isoetec device includes the ability to detect and store the outgoing telephone number. When placing outside line calls using LCR, the number is dialed, after which the system uses the dialed number to "select[] an idle line in the least costly trunk group and dials the call." Page 4.220. One of ordinary skill in the art would understand that to make a selection from among trunk groups using a telephone number, that number would necessarily be detected and stored.
means for addressing said database means for identifying a plurality of communication switch paths to said second telephone and the cost rate of each path,	The Isoetec device includes the ability to address the database and identify a plurality of communication switch paths to the second telephone and the cost rate of each path. *See, e.g.* page 10.1 ("Least Cost Routing (LCR) . . . automatically selects the least expensive available route for an outside line call."); page 4.103 ("LCR will pick the long distance route which will be the most cost effective at that time."); Figure 10-1.
means for comparing the cost rate of each path so as to determine a least cost route, and	The Isoetec device includes the ability to compare the cost rate of each path and determine a least cost route. *See, e.g.*, page 10.1 ("Least Cost Routing (LCR) . . . automatically selects the least expensive available route for an outside line call."); page 4.103 ("LCR will pick the long distance route which will be the most cost effective at that time.").

means operatively connected to said switch means and said second jack means for generating a number sequence corresponding to a desired carrier so that said call is routed through said second jack means to the selected communication path and carrier to establish a switched connection between said first telephone and said second telephone phone.	The Isoetec device includes the ability to generate a number sequence corresponding to a desired carrier to route the call through the network jack means to the selected communication path and carrier to establish a switched connection between two telephones. Isoetec includes a description of the concept of using codes to access different carriers (page 10.2) and will generate a number sequence corresponding to the least cost carrier to connect the two telephones. *See, e.g.*, page 4.103 ("LCR will pick the most cost effective route at that time. ... The call is dialed out by LCR").

Claim or Claim Element	**Prior Art (STC)**
1. A device for routing telephone calls along a least cost route originating from a first telephone to a second telephone having an associated telephone number via a network having a plurality of alternate communication switch paths corresponding to different carriers which can be chosen to route the call and normally providing a current to said first telephone when said first telephone is in use, comprising	The device disclosed in STC (the "STC device") is for routing telephone calls over a network along a least cost route. *See, e.g.*, page 4, ¶1 ("The arrangement to be described is a device which is connected between the BT line and a telephone, and routes calls to the MCL network when it is cheaper to do so.").
a housing forming an enclosure and comprising first jack means for connection to said first telephone and second jack means for connection to said network	The STC device includes a housing forming an enclosure. *See, e.g.*, page 4, ¶1("[The device] is housed in a standard box . . . ."). The device also includes jack means for connecting the device to a telephone and jacks means for connecting the device to a telephone network. *See, e.g.*, page 4, ¶1("The unit has four telephone connector inlets, one of which connects the box to the line, while the others provide three possible telephone extensions.").

switch means operatively connected to said first jack means for disconnecting said first telephone from said network,	The STC device also includes switch means for disconnecting the telephone from the network. *See, e.g.*, page 2, ¶4 ("... switching means . . .to connect the network access arrangement between the line and the instrument . . . ."); page 3, ¶1 ("... whereafter the access arrangement is switched out of circuit and the instrument reverts to its condition in which it is directly connected to the line . . . ."); page 4, ¶2 ("... the line is switched to the device . . . .").
means operatively connected to said switch means for generating a current through said switch means to the first telephone, corresponding to a current provided by said network,	The STC device includes means for generating a current through the switching means to the telephone. *See, e.g.*, page 4, ¶2 ("The telephone during the signalling is powered from the external power supply . . . ."); page 5, ¶7 ("The telephone is now powered from the external PSU . . . .").
database means for storing billing rate parameters for determining a least cost communication path for call corresponding to said telephone number,	The STC device includes a database containing parameters used to determine a least cost routing path. *See, e.g.*, page 5, ¶2 ("A look-up table will be stored in an EPROM 7 which could have a default data base installed, and could be directly modifiable from the line.").
means operatively connected to said switch means for detecting and storing said telephone number originating from the first telephone,	The STC device also includes means for detecting and storing an outgoing call from the telephone connected with the device. *See, e.g.*, page 2, ¶4 ("... which includes means for monitoring the line outgoing from the instrument to detect outgoing 'dialled' digits from that instrument, switching means responsive to the detection by said monitoring means of the commencement of "dialling" therefrom . . . ."); page 2, ¶4 through page 3, ¶1 ("... storage means in said arrangement into which digits from the instrument can pass . . . .").

means for addressing said database means for identifying a plurality of communication switch paths to said second telephone and the cost rate of each path,	The STC device includes the ability to address the database to identify the cost rate of a plurality of communication switch paths. *See, e.g.,* page 4, ¶3 ("All dialed digits (LD or DTMF) from the caller…are decoded and the number is processed, and redialled to the exchange unmodified for BT calls or modified for with the MCL protocol, for Mercury calls."); page 6, ¶3 ("[A]ll the dialled digits are detected, stored and examined. The device determine[s] from the first four digits that it should be a Mercury routed number, or, under processor control, that it is a call whose establishment would be cheaper via Mercury.").
means for comparing the cost rate of each path so as to determine a least cost route, and	The STC device can compare the cost rate of the plurality of paths and determine which is the least cost route. *See, e.g.,* page 3, ¶4 ("… an interface device … which routes calls to the MCL network when it is cheaper to do so."); page 4, ¶1 ("The arrangement to be described is a device which is connected between the BT line and a telephone, and routes calls to the MCL network when it is cheaper to do so."); page 6, ¶3 ("The device determine[s] from the first four digits that it should be a Mercury routed number, or, under processor control, that it is a call whose establishment would be cheaper via Mercury.").

means operatively connected to said switch means and said second jack means for generating a number sequence corresponding to a desired carrier so that said call is routed through said second jack means to the selected communication path and carrier to establish a switched connection between said first telephone and said second telephone phone.	The STC device is able to generate a number sequence corresponding to a desired carrier and connect the telephone to the dialed telephone. *See, e.g.,* page 4, ¶3 ("All dialed digits (LD or DTMF) from the caller . . . are decoded, and the number is processed, and redialled to the exchange unmodified for BT calls or modified with the MCL protocol, for Mercury calls."); page 6, ¶'s 3-5 ("The device determine[s] from the first four digits that it should be a Mercury routed number, or, under processor control, that it is a call whose establishment would be cheaper via Mercury. The Mercury access code, 131, is first dialled automatically, under control of the processor 1 and via the transmission circuit 5. Then a delay of fixed/programmable time is inserted. After that the user's authorisation code will be sent in DTMF. ... After the line is switched to the telephone, if any further digits are entered . . . those digits will be detected and redialled after the line is switched to the device.").

Claim or Claim Element	Prior Art (Jabs)
1. A device for routing telephone calls along a least cost route originating from a first telephone to a second telephone having an associated telephone number via a network having a plurality of alternate communication switch paths corresponding to different carriers which can be chosen to route the call and normally providing a current to said first telephone when said first telephone is in use, comprising	The device disclosed in Jabs (the "Jabs device") may be used to route telephone calls along a least cost route via a network having a plurality of alternate communication switch paths. *See, e.g.,* col. 4, lines 24-28 ("The interface has a programmable routing feature such that it automatically provides the route from one of the station channels to the available trunk channel linked to the communication carrier having the medium of least cost."); col. 4, lines 49-55 ("[T]he interface automatically captures and interprets the subscriber dialed telephone number, determines the least cost route, and redials by the adding or stripping of the necessary digits to the subscriber dialed telephone number so that the number may be understood correctly by the selected carrier."). Each of the land line networks of the communication media and carriers correspond to a switch path and normally provides current to the telephone when it is in use. *See, e.g.,* col. 8, lines 17-19 ("Each of the telecommunication ports 100, 104, 108, and 112 have lines that represent 'normal current,' 'reverse current,' . . . .").

a housing forming an enclosure and comprising first jack means for connection to said first telephone and second jack means for connection to said network	The Jabs device includes a housing. *See, e.g.*, col. 6, lines 34-40 ("[T]he interface of the present invention is within a housing."). The housing includes first and second jack means for connection to a telephone and a network, respectively. *See, e.g.*, col. 8, lines 12-17 ("The telecommunication ports 100, 104, 108, and 112 are jacks or plugs to allow attachment of telecommunication stations to the station channels and attachment of communication terminals to the trunk channels.") The interfaces 108 and 112 act as first jack means and the interfaces 100 and 104 act as second jack means.
switch means operatively connected to said first jack means for disconnecting said first telephone from said network,	The interfaces 108 and 112 of the Jabs device act as switch means because they control connecting and disconnecting the tip and ring pair connected to the first telephone from the network. *See, e.g.*, col. 8, lines 24-25 ("Each of the ports 100, 104, 108, and 112 have 'tip' and 'ring' wire connections.").

means operatively connected to said switch means for generating a current through said switch means to the first telephone, corresponding to a current provided by said network,	The Jabs device generates and transmits a current corresponding to the current that the network itself would have sent. *See, e.g.,* col. 8, lines 24-25 ("Each of the ports 100, 104, 108, and 112 have 'tip' and 'ring' wire connections."); col. 9, line 64 through col. 10, line 3 ("Upon a scan of a particular channel, the system will determine the channel number or designation at 600 and proceed to determine if loop current is present at 602. Loop current from a telecommunication station indicates that the subscriber has gone off hook or picked up the phone or other telecommunication device and is seeking an outgoing connection."). The indication described above occurs when no voice communication is yet present, so it corresponds to a current provided by said network, but which is not actually provided by the network and goes through the interfaces 108 and 112.
database means for storing billing rate parameters for determining a least cost communication path for call corresponding to said telephone number,	The Jabs device has an external memory cartridge which "holds tables for least cost routing." Col. 6, line 26; *see also* col. 22, lines 49-52 ("[A] memory that contains a lookup table of tariff information that relates to the different carriers of the communication medium capable of linking to the plurality of carriers of the same medium."); col. 12, lines 42-43 ("A plurality of tables are constructed to encompass both standard and off-peak rates.").

means operatively connected to said switch means for detecting and storing said telephone number originating from the first telephone,	The Jabs device includes the ability to detect and store an outgoing telephone number. *See, e.g.*, col. 10, lines 7-10 ("The digit count seeks to count the number of independent DTMF (dual-tone multifrequency) tones (touch-tones) that have been entered as digits in a dialing sequence."); col. 2, lines 8-15 ("The calling party, or subscriber, dials the desired telephone number following the North American dialing plan and the call is processed automatically by the adding or stripping of the necessary touch-tone commands to the subscriber dialed telephone number so that the number may be understood correctly by the selected carrier. Such routing and redialing is invisible to the subscriber."); col. 20, lines 53-55 ("The interface captures the sequence of the dialing digits . . . . ").

means for addressing said database means for identifying a plurality of communication switch paths to said second telephone and the cost rate of each path,	The second and third paragraphs of col. 11 describe the hierarchical setting of various communication paths (e.g., satellite, cellular and land line) and their relative rates. The third paragraph expressly states that "there could be two or more cellular or land lines." Lines 53-54. Thus, there are a plurality of switch paths. In addition, the satellite system alone may have plural switch paths. The last paragraph of col. 3 states, "Within a satellite network such as Inmarsat, the different carriers are represented by the different coast earth stations through which an outgoing telephone call from an oceangoing vessel may be routed." Lines 57-60. The CPU 22 addresses the routing tables stored in the external memory cartridge 52. *See, e.g.,* col. 6, lines 25-30 ("The external memory cartridge 52 is a 32K EPROM that holds tables for least cost routing and the program source code for the CPU 22 and the digital signal processors 24 and 26. The external memory cartridge 52 is connected to the main board at an input/output connector 54.").

means for comparing the cost rate of each path so as to determine a least cost route, and	The third paragraph of col. 11 expressly states "The interface, upon placement of a call, selects the channel of least cost (first choice) off hook, and look for loop current and/or dial tone. If loop current is not detected, the interface on hooks this channel and try either another channel of the same media (as there could be two or more cellular or land lines) if available, or bring the channel off hook for the second choice. The interface continues this process until the channels that are of less cost than satellite are exhausted." Lines 48-57. Thus, the rates of the various non-satellite paths are compared to determine a least cost route. Also, the rates of the various satellite routes are also compared when satellite calls are used. *See, e.g.,* col. 11, line 63 through col. 12, line 10 ("If the medium selected is via satellite, the interface interprets the country code selected by the caller in the dialing sequence and look through search tables to select the least expensive CES to route the call. ... The interface scans its search tables and selects the coast earth station having the least cost into the geographic zone which contains the selected country. If the selected CES is busy or not available the next least expensive CES is selected . . . ."). *See also* col. 4, lines 24-28 ("The interface has a programmable routing feature such that it automatically provides the route from one of the station channels to the available trunk channel linked to the communication carrier having the medium of least cost.").

means operatively connected to said switch means and said second jack means for generating a number sequence corresponding to a desired carrier so that said call is routed through said second jack means to the selected communication path and carrier to establish a switched connection between said first telephone and said second telephone phone.	The Jabs device "automatically captures and interprets the subscriber dialed telephone number, determines the least cost route, and redials by the adding or stripping of the necessary digits to the subscriber dialed telephone number so that the number may be understood correctly by the selected carrier. For the case of a call completed via satellite communications, the interface will also automatically send a string of electronic signals appropriate to access a satellite to effect the satellite communication. Such routing and redialing is invisible to the subscriber." Col. 4, lines 49-59. *See also* col. 20, lines 53-55 ("The interface captures the sequence of the dialing digits and routes the call . . . . ").

As set forth in the claim charts above, each of the limitations in claim 1 is fully disclosed by the Vodavi, Toshiba, Isoetec, STC, and Jabs prior art references. As mentioned above, none of these references were of record during the initial examination of the Weinberger Patent, although the Weinberger assignee was aware of at least STC at the time it submitted correspondence to the Patent Office during prior reexamination proceedings. *See* **Exhibit A**. With respect to the first claim element, all five cited prior art references disclose housings including jacks for connecting the device to a telephone and jacks for connecting the device to a phone network, which accords with the construction of this element proposed by the assignee of the Weinberger Patent in public document issued in a federal district court proceeding involving the Weinberger Patent. A copy of this document is attached hereto as **Exhibit B** (*see* p. 6).

Regarding the second claim element, the patentee of the Weinberger Patent has advocated for an interpretation of "switch means" that encompasses, among other things, relays (*see* **Exhibit B**, p. 7). Relays are used in the Toshiba reference, "switching means" are explicitly disclosed in STC, "circuitry . . . for voice switching" is disclosed in the Isoetec reference, and other embodiments of switch means are disclosed by the Vodavi and Jabs references. *See* claim charts above.

With regard to the third claim element, the Weinberger patentee has publicly admitted that it should be interpreted to include any "circuitry capable of providing power to energize the telephone." **Exhibit B**, p. 8. The wires referred to in the Vodavi, Jabs and Isoetec references, and the power supplies referred to in STC and the Toshiba reference, are each capable of providing power to energize the telephone. *See* claim

charts above. Moreover, those having ordinary skill in the art will appreciate that the limitations of both the second and third claim elements—as interpreted by the Weinberger Patent assignee—are necessarily and inherently found in any complex, multi-phone telephone system, such as those disclosed and described in Toshiba, Vodavi, and Isoetec. Such systems are typically configured to support more subscriber telephones than external network lines. Thus, with reference to the third claim element, they must rely on an internal power supply to provide the current that is required to energize all subscriber telephones.

The fourth claim element, according to an admission by the Weinberger patentee, encompasses "a database of the parameters used during the least cost routing analysis." **Exhibit B**, p. 8. Since all of the cited prior art references are capable of performing least cost routing, they necessarily provide a database for storage of the parameters used in making the least cost routing determination. Moreover, the claim charts above contain more specific recitations to least cost routing parameters. The Toshiba reference, for example, specifically refers to "Least Cost Routing parameters" in more than one instance. *See* claim charts above.

The fifth claim element has been defined by the Weinberger patentee as encompassing "a variety of common and readily available integrated circuits with DTMF detection capabilities." **Exhibit B**, p. 9. The Vodavi reference discloses circuitry with DTMF detection capabilities. *See, e.g.*, page 400-5 ("The MISB Board contains 4 DTMF receivers and 2 DTMF senders."). Likewise, the Toshiba device, *see, e.g.,* General Description, page 8 ("...to interpret the Dual-tone Multi-frequency (DTMF) signals they may transmit".); General Description, page 10 ("...can communicate with devices . . . that require Dual-tone Multi-frequency (DTMF) signaling."), the Isoetec device, *see, e.g.,* page TS.2 ("DTMF Receiver"); page 1.15 ("DTMF Receiver Combination Port Card"), and the Jabs device, *see, e.g.,* col. 10, lines 7-8 ("The digit count seeks to count the number of independent DTMF (dual-tone multifrequency) tones . . . ."), all have DTMF capabilities. Finally, the STC device also uses DTMF detection. *See, e.g.*, page 4, ¶3 ("All dialled digits (LD or DTMF) . . . ."); page 5, ¶1 ("The device will be required to signal in . . . DTMF . . . ."); page 5, ¶2 ("The data from that table is passed in DTMF tones . . . ."); page 5, ¶7 ("[A]ll the dialled digits are detected in a DTMF transceiver . . . .").

The sixth claim element, according to the Weinberger patentee, "is directed to a device that addresses [the] database in order to identify the possible routes through the network to the destination telephone and the costs of using those routes for the call." **Exhibit B**, p. 9. Specific citations within the cited prior art references to this element can be found in the claim charts above. For example, Jabs discloses "a memory that contains a lookup table of tariff information that relates to the different carriers of the communication medium." Col. 22, lines 49-52. A "tariff" is equivalent to a "rate" and a "lookup table of tariff information" is equivalent to a database of cost rates.

By the Weinberger Patent assignee's admission, the seventh claim element "is directed to any computer processor or any equivalent device or circuitry capable of

identifying and comparing available paths and/or carriers for routing a call based on cost." **Exhibit B**, p. 9. As interpreted by the Weinberger Patent assignee, each of the cited prior art references satisfies this element. Specific citations within the cited prior art references to least cost routing that satisfy this element can be found in the claim charts above.

The eighth and final claim element encompasses "a signal generator (such as a DTMF tone generator or equivalent circuitry), which [] generates the tone signals corresponding to the numerical prefix of the selected carrier . . . to allow for communication between the first and second telephones." **Exhibit B**, p. 10. Vodavi, Toshiba, and Jabs each include DTMF tone generators (see *supra*) and each discloses generating tone signals, corresponding to the carrier selected by the least cost routing process, to allow for communication between two telephones. *See* claim charts above. Isoetec also discloses use of a DTMF tone generator. *See, e.g.*, page 1.8 ("The VCM contains the DTMF tone generators . . . ."). Likewise, STC discloses DTMF tone signal generation. *See, e.g.*, page 4, ¶3 ("All dialled digits (LD or DTMF) . . . ."); page 5, ¶1 ("The device will be required to signal in . . . DTMF . . . ."); page 5, ¶2 ("The data from that table is passed in DTMF tones . . . ."); page 5, ¶7 ("[A]ll the dialled digits are detected in a DTMF transceiver . . . .").

Claim 1 of the Weinberger Patent is therefore anticipated by the Vodavi, Isoetec, Toshiba, STC and/or Jabs references. Moreover, many of the claim limitations are inherently disclosed, even apart from the particular disclosures referenced above. For example, one having ordinary skill in the art would understand that a complex, multi-phone system of the type disclosed in the Vodavi, Toshiba, and Isoetec references would necessarily provide a switch means for disconnecting one or more of its phones from the network, and would necessarily provide a current to power its telephones.

B. Claims 2, 5, 7, and 10

Claims 2, 5, 7, and 10 of the Weinberger Patent are considered to be fully anticipated under 35 U.S.C. § 102 by the Vodavi, Toshiba, Isoetec, STC or Jabs prior art references.

Claim or Claim Element	Prior Art
2. The device according to claim 1 wherein said least cost communication path parameters include the time and date of the call.	**Vodavi** Vodavi discloses Least Cost Routing parameters including the time and date of the call. *See, e.g.*, page 300-5 ("The Least Cost Routing (LCR) feature allows for the automatic selection of the most economical trunk according to the number dialed and the time of day/day of the week.").
	Toshiba Toshiba allows for setting and maintaining the time and date, *see, e.g.*, page 1-15, which are used as parameters for least cost routing. *See, e.g.*, page 2-28 ("The customer chooses these lines for the specific time of day . . . with varying priorities."); page 2-98.
	Isoetec Isoetec discloses selecting a least cost communication path by the time and day of the call. *See, e.g.*, page 4.103 ("LCR will pick the long distance route which will be the most cost effective **at that time**") (emphasis added).
	Jabs Jabs discloses using the time and date of a call as least cost communication path parameters. *See, e.g.*, col. 12, lines 4-6 ("The interface also takes the time of day into consideration . . . ."); col. 6, lines 53-54 ("The real time clock 58 maintains the current date and time . . . .").

	STC The STC device relies on the time and date of a call to make its least cost routing determinations because it "routes calls to the MCL network **when** it is cheaper to do so." Page 4, ¶1 (emphasis added).

Claim or Claim Element	Prior Art
5. The device according to claim 1 wherein said means for generating said number sequence comprises a dual tone multifrequency generator.	**Vodavi** Vodavi discloses generating a number sequence with a dual tone multifrequency (DTMF) generator. *See, e.g.*, page 400-5 ("The MISB Board contains 4 DTMF receivers and 2 DTMF senders.").
	Toshiba Toshiba discloses transmitting Dual Tone Multi-Frequency (DTMF) signals. *See, e.g.*, General Description, page 8 ("...to interpret the Dual-tone Multi-frequency (DTMF) signals they may transmit".); General Description, page 10 ("...can communicate with devices . . . that require Dual-tone Multi-frequency (DTMF) signaling.").
	Isoetec Isoetec discloses generating a number sequences with a dual tone multifrequency (DTMF) generator. *See, e.g.*, page 1.8 ("The VCM contains the DTMF tone generators, a DTMF tone receiver . . . .").

	Jabs In the paragraph spanning columns 19 and 20, Jabs discloses that "The first digital signal processor 24 performs tone generation for . . . telephony single and dual tones." *See also* col. 10, lines 7-10 ("The digit count seeks to count the number of independent DTMF (dual-tone multifrequency) tones (touch-tones) that have been entered as digits in a dialing sequence.").
	STC The STC device is able to generate a number sequence by way of a dual tone multifrequency (DTMF) generator. *See, e.g.*, page 4, ¶3 ("All dialled digits (LD or DTMF) . . . ."); page 5, ¶1 ("The device will be required to signal in . . . DTMF . . . ."); page 5, ¶2 ("The data from that table is passed in DTMF tones . . . ."); page 5, ¶7 ("[A]ll the dialled digits are detected in a DTMF transceiver . . . .").

Claim or Claim Element	Prior Art
7. The device according to claim 1 wherein said detecting means includes a dual tone multifrequency detector.	**Vodavi** Vodavi discloses a dual tone multifrequency (DTMF) detector. *See, e.g.*, page 400-5 ("The MISB Board contains 4 DTMF receivers and 2 DTMF senders.").

	Toshiba Toshiba discloses use of a Dual Tone Multi-Frequency (DTMF) receiver. *See, e.g.,* General Description, page 8 ("DTMF/ABR Tone Detection Receiver (QRCU): Station users in systems that have the optional QRCU installed can . . . communicate with devices . . . that require Dual-tone Multi-frequency (DTMF) signaling.") General Description, page 10 ("...can communicate with devices . . . that require Dual-tone Multi-frequency (DTMF) signaling.").
	Isoetec The Isoetec device provides a dual tone multifrequency (DTMF) detector. *See, e.g.,* page 1.8 ("The VCM contains the DTMF tone generators, a DTMF tone receiver . . . .").
	Jabs The Jabs device is capable of DTMF detecting. *See, e.g.,* col. 10, lines 7-10 ("The digit count seeks to count the number of independent DTMF (dual-tone multifrequency) tones (touch-tones) that have been entered as digits in a dialing sequence."); col 20, lines 20-23 ("The second digital processor 26 performs all of the tone decoding of all the satellite communication tones and telephony single and dual tones.").
	STC The STC device is able to detect dual tone multifrequency (DTMF) signals. *See, e.g.,* page 5, ¶7 ("[A]ll the dialled digits are detected in a DTMF transceiver . . . .").

Claim or Claim Element	Prior Art
10. The device according to claim 1 including means for updating said database means with a current billing rate schedule.	**Vodavi** Vodavi discloses the ability to update its database of rate information with current billing rates. *See, e.g.,* page 600-1 (discussing changing the database); pages 660-1 through 660-28 (discussing Least Cost Routing programming).
	Toshiba Toshiba provides for updating the database with current billing rate information via a "program mode" of Remote Administration and Maintenance. *See, e.g.,* Section 100-816-600, page 2; Section 100-816-600, pages 10-11.
	Isoetec The Isoetec device includes the ability to perform remote programming in order to update its database with a current billing rate schedule. *See, e.g.*, page 1.24 (Remote Programming and Maintenance); page 23.1 ("Any function that can be accomplished by the on-site programming terminals can be accomplished remotely through the modem."); page 23.19 (Section 21.17).
	Jabs The means for updating the billing rate database in Jabs is disclosed at column 6, lines 25-39 as a physically removable memory cartridge.
	STC The STC device has a database that can "be directly modifiable from the line." Page 5, ¶2.

Claim 2 recites using the time and date of the telephone call as parameters for determining a least cost communication path. This limitation is explicitly disclosed in the Vodavi, Toshiba, and Jabs references. *See* claim charts above. It is also implicitly disclosed in the Isoetec reference, in that the Isoetec device chooses the long distance

route "which will be the most cost effective **at that time**," page 4.103 (emphasis added), and in STC, in that the device disclosed in this reference is able to route calls along a particular telephone network "**when** it is cheaper to do so," Page 4, ¶1 (emphasis added). Moreover, virtually all telephone systems having least-cost-routing functionality would satisfy this element, because such parameters are fundamental to making least cost routing determinations.

Claim 5 recites a dual tone multifrequency (DTMF) generator, which is clearly and explicitly disclosed in all five of the cited prior art references. *See* claim charts.

Claim 7 recites a dual tone multifrequency (DTMF) detector, which is also clearly and explicitly disclosed in each of the cited references. *See* claim charts.

Claim 10 recites the ability to update the database with a current billing rate schedule. The databases disclosed in each of the cited prior art references can be updated with current billing rate information. *See* claim charts.

Each of claims 2, 5, 7, and 10 are therefore fully anticipated by any of the cited prior art references.

C. Claims 3, 4, 8, and 9

Claims 3, 4, 8, and 9 of the Weinberger Patent are considered to be fully anticipated under 35 U.S.C. § 102 by the Vodavi, Toshiba, Isoetec, or Jabs prior art references.

Claim or Claim Element	Prior Art
3. The device according to claim 1 wherein said switch means connects said first telephone to said network during an incoming call.	**Vodavi** Vodavi discloses connecting a telephone to the network during an incoming call. *See, e.g.,* page 200-4 (Section 200.31).
	Toshiba Toshiba's switch means also operate to connect a telephone to the phone network during an incoming call. *See, e.g.,* page 2-15 ("[A] digital or electronic telephone . . . may be automatically connected to the lowest CO line ringing in . . . .").

	Isoetec Isoetec discloses connecting telephones to the network during incoming calls. *See, e.g.*, page 1.21 ("Direct Inward Dial").
	Jabs Jabs also discloses connecting telephones to the network during incoming calls. *See, e.g.*, col. 15, lines 19-32 ("FIG. 8 is the ringer subroutine for ring generation in the telecommunication devices at one of the station channels upon incidence of an incoming call. ... If the ring generator is not busy at 806, then a ring relay is closed at 808, the ring generator 94 is enabled at 810 to cause ringing of the subscriber telephone or telecommunication station . . . .").

Claim or Claim Element	Prior Art
4. The device according to claim 1 including an internal power supply connected to said means for generating a current.	**Vodavi** Vodavi discloses an internal power supply. *See, e.g.*, page 400-2 (Figure 400.1).
	Toshiba Toshiba includes an internal power supply for the system. *See, e.g.*, General Description, page 5 ("Power Supply"); General Description, pages 6 and 7 (Figures 7 and 8).
	Isoetec Isoetec discloses an internal power supply. *See, e.g.*, page 1.16.
	Jabs Jabs discloses an internal power supply. *See, e.g.*, col. 6, lines 44-47.

Claim or Claim Element	Prior Art
8. The device according to claim 1 including means for maintaining the time and date so as to determine the least cost route based on the time and date of the call.	**Vodavi** Vodavi includes the ability to maintain the time and date so as to determine the least cost route based on the time and date of an outgoing call. *See, e.g.,* page 200-11 (Section 200.87: "This allows the first designated attendant to set the time and date on the system."); page 230-2 (Section 230.26: "The feature access code allows any designated attendant station to set the system time and date"); page 300-5 ("The Least Cost Routing (LCR) feature allows for the automatic selection of the most economical trunk according to the number dialed and the time of day/day of the week.").
	Toshiba Toshiba includes means for maintaining the time and date, *see, e.g.,* page 1-15; page 2-98, which are used to determine the least cost route for a telephone call. *See, e.g.,* page 2-34 ("Each group's route definitions are specified to activate separately according to the time schedules set by . . . .").
	Isoetec The Isoetec device allows a user to maintain the time and date and uses those parameters to select a least cost route. *See, e.g.,* page 7.14 (Time/Date Information); page 4.181 (Date and Time); page 4.103 ("LCR will pick the long distance route which will be the most cost effective **at that time**") (emphasis added).

	Jabs Col. 6, lines 53-57, of Jabs states "The real time clock 58 maintains the current date and time in order that the times that all calls are initiated and terminated may be accurately recorded." These parameters are used in determining least cost routes. *See, e.g.*, col. 12, lines 4-6 ("The interface also takes the time of day into consideration as certain coast earth stations have 'off-peak' rates at varying times.").

Claim or Claim Element	Prior Art
9. The device according to claim 1 wherein said cost may be given a bias for preference to a given carrier.	**Vodavi** Vodavi discloses a Least Cost Routing system that allows for priority ("bias") to be given to particular carriers. *See, e.g.*, page 620-43 ("LCRP=LCR Priority, this defines the priority level of the . . . .").
	Toshiba The Toshiba device allows for bias to be given to particular carriers. *See, e.g.*, General Description, page 19 ("Least Cost Routing: ... Stations can be grouped into one of four LCR classes, each with its own routing priority. Selected station users may have priority use of a line, even when the route with the lowest cost is not available."); page 2-33 ("The order in which the route definitions are entered defines the order of LCR line selection.").

	Isoetec The Isoetec Device allows its users to give bias or preference to particular carriers. *See, e.g.*, page 10.2 (Equal Access); page 10.9 (Volume Discount); page 10.9 (LCR Exceptions: "LCR Exceptions is a table that is used to bypass the normal decision-making process of the Least Cost Routing program. Calls to area codes and/or exchanges entered into this table are routed via the service indicated in the table instead of the least costly service arrived at by the program.").
	Jabs The Jabs device allows a user to override least cost routing in order to give preference to a preferred carrier. *See, e.g.*, col. 12, lines 12-15 ("An override feature is provided to allow a caller to override least cost routing and select a preferred CES choice should they require that option.").

Claim 3 recites connecting a telephone to the network during an incoming call. This limitation is clearly disclosed by each of the Vodavi, Toshiba, Jabs, and Isoetec references. *See* claim charts. Additionally, it is an obvious, if not necessary, feature to any complex phone system such as are disclosed in at least the Vodavi, Toshiba, and Isoetec references.

Claim 4 recites an internal power supply. Once again, this limitation is both disclosed in the cited references, *see* claim charts, and obvious and/or necessary to providing a complex telephone system of the kind disclosed in the Vodavi, Toshiba, and Isoetec references.

Claim 8 recites means for maintaining the time and date such that the time and date can be used as parameters for making the least cost routing determination. This limitation is explicitly disclosed in the Vodavi, Toshiba, Isoetec, and Jabs references. *See* claim charts. STC also inherently discloses this limitation in that it would not be able to recognize "**when** it is cheaper to [route calls to an alternate network]" without some ability to maintain the date and time. Page 4, ¶1 (emphasis added). Moreover, virtually all telephone systems having least-cost-routing functionality would satisfy this element, because such parameters are fundamental to making least cost routing

determinations and because means for maintaining the time and date must be provided in order to use the time and date as parameters in least cost routing.

Claim 9 recites giving a bias for preference to a given carrier. Vodavi, Toshiba, Jabs, and Isoetec each explicitly disclose the ability to give routing priority to particular carriers as desired. *See* claim charts.

Claims 3, 4, 8, and 9 are therefore fully anticipated by Vodavi, Toshiba, Jabs, or Isoetec.

D. Claims 6 and 12

Claims 6 and 12 are considered to be invalid under 35 U.S.C. § 103 in view of STC, Vodavi, Toshiba, Jabs and/or Isoetec, in further view of the information, knowledge, and skill of one having ordinary skill in the field of telephony.

Claim 6 recites that "the housing is substantially cylindrical with opposing ends, wherein said first jack means is positioned on one end and said second jack means is positioned on the opposite end." Although none of the cited references disclose this limitation, the size and shape of the device, and the location of the jacks on the device, are all specifications which are routinely modified by persons having ordinary skill in the art and are merely routine design choices. The particular configuration recited in claim 6 would therefore have been an obvious alteration of, for example, the device disclosed in STC.

Claim 12 recites a removable cover for accessing the removable chip. The removable, external memory cartridge disclosed in Jabs "allows for easy upgrading of both tariff information and system code without requiring the opening of [the] housing." Col. 6, lines 35-39. As such, it would be an obvious matter of design choice to include a removable cover so that the memory cartridge could be kept hidden and the housing would not have to be opened in order to access the memory cartridge.

Claims 6 and 12 are therefore obvious variations of the disclosures of the references cited herein.

E. Claim 11

Claim 11 of the Weinberger Patent is considered to be fully anticipated under 35 U.S.C. § 102 by the Jabs prior art reference.

Claim or Claim Element	Prior Art (Jabs)
11. The device according to claim 10 wherein said update means includes a circuit board mounted inside said enclosure, and said database means comprises a removable chip on said circuit board, and means for accessing said removable chip from outside said housing.	Jabs discloses the use of a circuit board, with which is connected a removable, external memory cartridge for updating billing rate information. *See, e.g.,* col. 6, lines 26-40 ("The external memory cartridge 52 is a 32K EPROM that holds tables for least cost routing and the program source code for the CPU 22 and the digital signal processors 24 and 26. The external memory cartridge 52 is connected to the main board at an input/output connector 54. The input/output connector 54 is a socket at which the external memory cartridge 52 may be easily plugged into or unplugged out of the main board. Where the interface of the present invention is within a housing, the ability to plug or unplug the external memory cartridge 52 allows for easy upgrading of both tariff information and system code without requiring the opening of such housing or any special programming or erasing equipment. The external memory cartridge 52 is completely reusable.").

Claim 11 recites the use of a removable chip on a circuit board to update a database with a current billing rate schedule. Jabs discloses using a removable cartridge (chip) which is connected to a main board (circuit board) and allows for updating of tariff (billing rate) information. Claim 11 is therefore fully anticipated by Jabs.

F. Claim 13

Claim 13 of the Weinberger Patent is considered to be fully anticipated under 35 U.S.C. § 102 by the Vodavi, Toshiba, or Isoetec prior art publications.

Claim or Claim Element	Prior Art
13. The device according to claim 10 wherein said update means includes a modem for receiving signals through said telephone line and downloading the update information.	**Vodavi** The Vodavi device includes a modem which can be used to update billing rates. *See, e.g.*, page 400-5 (Figure 400.4 – "Modem Unit"); page 400-19; page 600-1 (discussing changing the database remotely with a modem).
	Toshiba The Toshiba device includes an optional modem that can access off-site programming to download update information. *See, e.g.*, General Description, page 11 ("Remote Maintenance Modem Subassembly (IMDU): The IMDU is an optional modem . . . to provide the system with a link to off-site programming and maintenance equipment . . . ."); General Description, page 21 ("Remote Administration and Maintenance . . . .").
	Isoetec The Isoetec device includes a modem, which can be used to download and update billing rate information. *See, e.g.*, page 1.24 (Remote Programming and Maintenance – "The ISOETEC System/228 is equipped with a built-in [] MODEM which allows a technician to . . . carry out any programming or maintenance that could be accomplished from an on site programming terminal."); page 23.1 ("Any function that can be accomplished by the on-site programming terminals can be accomplished remotely through the modem."); page 23.19 ("The Isoetec System/228 is equipped with a built-in 300/1200 baud MODEM . . . .")

Claim 13 recites using a modem to update the database with a current billing rate schedule. Vodavi, Toshiba, and Isoetec each explicitly disclose the use of a modem for updating a database with such information. *See* claim charts.

G. Claim 14

Claim 14 of the Weinberger Patent is considered to be fully anticipated under 35 U.S.C. § 102 by the Isoetec prior art reference.

Claim or Claim Element	Prior Art (Isoetec)
14. A device for routing telephone calls along a least cost route originating from a first telephone to a second telephone having an associated telephone number via a network having a plurality of alternate communication switch paths corresponding to different carriers which can be chosen to route the call and normally providing a current to said first telephone when said first telephone is in use, comprising	Isoetec discloses a device (the "Isoetec device") for routing telephone calls along a least cost route originating from a first telephone to a second telephone having an associated telephone number. *See, e.g.*, page 10.1 (Least Cost Routing). The Isoetec device provides least cost routing via a network having a plurality of alternate communication switch paths corresponding to different carriers which can be chosen to route the call. *See id.* Isoetec also discloses normally providing a current to said first telephone when in use. *See, e.g.*, page TS.1 ("Data and power are provided to the key phones through two pair, random twisted cable.").
a housing forming an enclosure and comprising first jack means for connection to said first telephone, and second jack means for connection to said network, means positioned on said housing for visibly displaying the time and date,	The Isoetec device has a housing forming an enclosure. A picture of the Isoetec housing (228 Cabinet) is shown on page 3.2 (Figure 3-1). The Isoetec device also has jack means for connection to telephones (page 3.6) and jack means for connection to a network (pages 3.8 through 3.9). The Isoetect device includes means for displaying the date and time. *See, e.g.*, page 7.14 (Time/Date Information); page 4.181 (Date and Time).

switch means operatively connected to said first jack means for disconnecting said first telephone from said network,	The Isoetec device includes means for switching (disconnecting) its telephones from the network. *See, e.g.*, page 1.8 ("The voice control module [ ] contains the circuitry necessary for voice switching and conference connections.").
means operatively connected to said switch means for generating a current through said switch means to said first telephone corresponding to said current provided by said network,	The Isoetec device includes means for providing a current to energize the telephones. *See, e.g.*, page TS.1 ("Data and power are provided to the key phones through two pair, random twisted cable."); page 1.16 ("Power Supplies").
means operatively connected to said time and date display means and said switch means for receiving a predetermined dial sequence from said first telephone corresponding to a predetermined date and time to be displayed and means for changing the displayed time and date based on the received signals,	The Isoetec device allows a user to program the time and date by entering a dial sequence into the telephone and changing the display in accordance with the dial sequence numbers. *See, e.g.*, page 7.14 (Time/Date Information: "Enter the time in 24 hour clock format . . . Enter the date in month-day-year format . . . .").
database means for storing billing rate parameters for determining a least cost communication path for a call corresponding to said telephone number, based on such factors as the time and date of the call,	The Isoetec device provides a database for storing billing rate parameters for determining a least cost communication path for placing a call in Section 10, titled Least Cost Routing (page 10.1 *et seq.*) ("Least Cost Routing (LCR) . . . automatically selects the least expensive available route for an outside line call.") ("A Customized Data Base. ... This information includes number and types of facilities and services used . . . ."). The Isoetec database is pre-configured to the customer's requirements. *See id.* The least cost communication path is determined based upon the time and date of the call. *See, e.g.*, page 4.103 ("LCR will pick the long distance route which will be the most cost effective **at that time**.") (emphasis added).

means operatively connected to said switch means for detecting and storing said telephone number originating from the first telephone,	The Isoetec device includes the ability to detect and store the outgoing telephone number. When placing outside line calls using LCR, the number is dialed, after which the system uses the dialed number to "select[] an idle line in the least costly trunk group and dials the call." Page 4.220. One of ordinary skill in the art would understand that to make a selection from among trunk groups using a telephone number that number would necessarily be detected and stored.
means for addressing said database means for identifying a plurality of communication switch paths to said second telephone and the cost rate of each path,	The Isoetec device includes the ability to address the database and identify a plurality of communication switch paths to the second telephone and the cost rate of each path. *See, e.g.* page 10.1 ("Least Cost Routing (LCR) . . . automatically selects the least expensive available route for an outside line call."); page 4.103 ("LCR will pick the long distance route which will be the most cost effective at that time."); Figure 10-1.
means for comparing the cost rate of each path so as to determine a least cost route, and	The Isoetec device includes the ability to compare the cost rate of each path and determine a least cost route. *See, e.g.*, page 10.1 *See, e.g.* page 10.1 ("Least Cost Routing (LCR) . . . automatically selects the least expensive available route for an outside line call."); page 4.103 ("LCR will pick the long distance route which will be the most cost effective at that time.").

means operatively connected to said switch means and said second jack means for generating a number sequence corresponding to a desired carrier so that said call is routed through said second jack means to the selected communication path and carrier to establish a switched connection between said first telephone and said second telephone.	The Isoetec device includes the ability to generate a number sequence corresponding to a desired carrier to route the call through the network jack means to the selected communication path and carrier to establish a switched connection between two telephones. Isoetec includes a description of the concept of using codes to access different carriers (page 10.2) and will generate a number sequence corresponding to the least cost carrier to connect the two telephones. *See, e.g.*, page 4.103 ("LCR will pick the most cost effective route at that time. ... The call is dialed out by LCR.").

Each of the limitations of claim 14 is explicitly disclosed in the Isoetec prior art reference, as set forth in the claim chart above.

In addition, the differences between the limitations of claim 14 and claim 1 are obvious variations. For example, claim 14 recites means for visibly displaying the time and date. Vodavi, Toshiba, Isoetec, Jabs, and STC each disclose the ability to store the time and date for use as parameters in making least cost routing determinations. One of ordinary skill in the art would therefore have had ample motivation to provide a visible display of the date and time, which were already being kept by these devices. Further motivation can be found in U.S. Patent No. 4,751,728 issued to Treat ("Treat"). Treat discloses a least cost routing device which comprises "a screen 19 that includes a viewing portion 26 for time, [and] an area 27 for indicating the date." Col. 3, lines 18-25. Since the teachings of Treat are in the field of least cost routing systems, and since each of the other references cited herein provide the teaching to allow for input and tracking of date/time, one of ordinary skill in the art would have been motivated to combine any of Vodavi, Toshiba, Isoetec, and/or Jabs with Treat.

H. Claims 15, 16, 18, 19, 22, and 23

Claims 15, 16, 18, 19, 22, and 23 of the Weinberger Patent are considered to be fully anticipated under 35 U.S.C. § 102 by the Isoetec prior art reference.

Claim or Claim Element	Prior Art (Isoetec)
15. The device according to claim 14 including means positioned on said housing for manually changing the date and time of the display.	Users of the Isoetec device can program the date and time of the display manually. *See, e.g.*, page 7.14 (Time/Date Information: "Enter the time in 24 hour clock format . . . Enter the date in month-day-year format . . . .").

Claim or Claim Element	Prior Art (Isoetec)
16. The device according to claim 14 wherein said means for generating said number sequence comprises a dual tone multifrequency generator.	The Isoetec device includes a dual tone multifrequency (DTMF) generator. *See, e.g.*, page 1.8 ("The VCM contains the DTMF tone generators . . . .").

Claim or Claim Element	Prior Art (Isoetec)
18. The device according to claim 14 wherein said detecting means includes a dual tone multifrequency detector.	The Isoetec device provides a dual tone multifrequency (DTMF) detector. *See, e.g.*, page 1.8 ("The VCM contains the DTMF tone generators, a DTMF tone receiver . . . .").

Claim or Claim Element	Prior Art (Isoetec)
19. The device according to claim 14 including means for updating said database means with a current billing rate schedule.	The Isoetec device includes the ability to perform remote programming in order to update its database with a current billing rate schedule. *See, e.g.*, page 1.24 (Remote Programming and Maintenance); page 23.1 ("Any function that can be accomplished by the on-site programming terminals can be accomplished remotely through the modem."); page 23.19 (Section 21.17).

Claim or Claim Element	Prior Art (Isoetec)
22. The device according to claim 19 wherein said update means includes a modem for receiving signals through said telephone line and downloading the update information.	The Isoetec device includes a modem, which can be used to download and update billing rate information. *See, e.g.*, page 1.24 (Remote Programming and Maintenance – "The ISOETEC System/228 is equipped with a built-in [] MODEM which allows a technician to . . . carry out any programming or maintenance that could be accomplished from an on site programming terminal."); page 23.1 ("Any function that can be accomplished by the on-site programming terminals can be accomplished remotely through the modem."); page 23.19 ("The Isoetec System/228 is equipped with a built-in 300/1200 baud MODEM . . . .").

Claim or Claim Element	Prior Art (Isoetec)
23. The device according to claim 14 wherein said cost may be given a bias for preference to a given carrier.	The Isoetec Device allows its users to give bias or preference to particular carriers. *See, e.g.,* page 10.2 (Equal Access); page 10.9 (Volume Discount); page 10.9 (LCR Exceptions: "LCR Exceptions is a table that is used to bypass the normal decision-making process of the Least Cost Routing program. Calls to area codes and/or exchanges entered into this table are routed via the service indicated in the table instead of the least costly service arrived at by the program.").

Each of the limitations in claims 15, 16, 18, 19, 22, and 23 are fully disclosed in the Isoetec reference. Moreover, many of these claim limitations are disclosed in other cited references, as established above in the claim charts and accompanying text relating to claim 1 and the dependent claims depending therefrom.

I. Claims 17 and 21

Claims 17 and 21 are considered to be invalid under 35 U.S.C. § 103 in view of STC, Vodavi, Toshiba, Jabs and/or Isoetec, in further view of the information, knowledge, and skill of one having ordinary skill in the field of telephony.

The limitations of claims 17 and 21 are considered obvious for the same reasons claims 6 and 12 are obvious, as set forth above in section D.

J. Claim 20

Claim 20 is considered to be invalid under 35 U.S.C. § 103 in view of Isoetec, in further view of Jabs.

Claim or Claim Element	Prior Art (Jabs)
20. The device according to claim 19 wherein said update means includes a circuit board mounted inside said enclosure, and said database means comprises a removable chip on said circuit board, and means for accessing said removable chip from outside said housing.	Jabs discloses the use of a circuit board, with which is connected a removable, external memory cartridge for updating billing rate information. Col. 6, lines 26-40 ("The external memory cartridge 52 is a 32K EPROM that holds tables for least cost routing and the program source code for the CPU 22 and the digital signal processors 24 and 26. The external memory cartridge 52 is connected to the main board at an input/output connector 54. The input/output connector 54 is a socket at which the external memory cartridge 52 may be easily plugged into or unplugged out of the main board. Where the interface of the present invention is within a housing, the ability to plug or unplug the external memory cartridge 52 allows for easy upgrading of both tariff information and system code without requiring the opening of such housing or any special programming or erasing equipment. The external memory cartridge 52 is completely reusable.").

Claim 20 recites the use of a removable chip on a circuit board to update a database with a current billing rate schedule. Jabs discloses using a removable cartridge (chip) which is connected to a main board (circuit board) and allows for

updating of tariff (billing rate) information. One having ordinary skill in the art would have been motivated to combine these teachings of Jabs with the teachings of Isoetec at least because both references relate to least cost routing systems.

K. Claim 24

Claim 24 of the Weinberger Patent is considered to be fully anticipated under 35 U.S.C. § 102 by the Isoetec prior art reference.

Claim or Claim Element	Prior Art (Isoetec)
24. An apparatus for displaying a time quantity which can be initiated from a telephone of the type capable of generating dual tone multifrequency signals comprising	The Isoetec device can display a time quantity, page 7.14 (Time/Date Information); page 4.181 (Date and Time), which can be initiated from a telephone capable of generating dual tone multifrequency (DTMF) signals. *See, e.g.*, page 1.8 ("The VCM contains the DTMF tone generators, a DTMF tone receiver . . . .")
a housing forming an enclosure and comprising first jack means for interconnection to said telephone, and second jack means for connection to a telephone switching network, said network normally providing a current to said telephone when said telephone is in use, means positioned on said housing for visibly displaying a time quantity,	The Isoetec device has a housing forming an enclosure. A picture of the Isoetec housing (228 Cabinet) is shown on page 3.2 (Figure 3-1). The Isoetec device also has jack means for connection to telephones (page 3.6) and jack means for connection to a network (pages 3.8 through 3.9). The housing of the Isoetec device includes means for displaying a time quantity. *See, e.g.*, page 7.14 (Time/Date Information); page 4.181 (Date and Time).
switch means operatively connected to said first jack means for disconnecting said telephone from said network,	The Isoetec device includes means for switching (disconnecting) its telephones from the network. *See, e.g.*, page 1.8 ("The voice control module [ ] contains the circuitry necessary for voice switching and conference connections.").

means operatively connected to said switch means for generating a current through said switch means to said telephone corresponding to said current provided by said network,	The Isoetec device includes means for providing a current to energize the telephones. *See, e.g.*, page TS.1 ("Data and power are provided to the key phones through two pair, random twisted cable."); page 1.16 ("Power Supplies").
means operatively connected to said means for displaying a time quantity and said first jack means for receiving said dual tone multifrequency signals, from said telephone when said telephone is disconnected from said network, said signals corresponding to said time quantity and for changing the displayed time quantity based on signals from said telephone, and means responsive to a dialing sequence originating on said telephone and operatively connected to said switch means for connecting said telephone to said network.	The Isoetec device allows a user to program the time and date by entering a DTMF signal into the telephone and changing the display of a time quantity in accordance with the dial sequence numbers entered. *See, e.g.*, page 7.14 (Time/Date Information: "Enter the time in 24 hour clock format . . . Enter the date in month-day-year format . . . ."). The device also allows a user to input a dialing sequence in order to connect the telephone to the network. *See, e.g.*, page 4.122 ("The digital telephones can select an outside line (or group) by dialing an access code.").

As set forth in the claim chart above, the Isoetec prior art reference fully discloses each of the limitations in claim 24. U.S. Patent No. 4,751,728 issued to Treat ("Treat") also contains disclosure highly relevant to claim 24. *See, e.g.*, col. 3, lines 18-25 ("T]he device 10 may include a housing 24 which has an offset portion 25 that is provided with a viewing area 32. The viewing area 32 may include a screen 19 that includes a viewing portion 26 for time, an area 27 for indicating the date, an area 28 for indicating the carrier, an area for indicating the duration of the call, an area 30 for indicating the number dialed, and an area 31 for indicating the cost of the call.").

L. Claims 25 and 26

Claims 25 and 26 of the Weinberger Patent are also considered to be fully anticipated under 35 U.S.C. § 102 by the Isoetec prior art reference.

Claim or Claim Element	Prior Art (Isoetec)
25. The apparatus according to claim 24 wherein said time quantity is the time of day.	The time quantity in Isoetec can be the time of day. *See, e.g.*, page 7.14 (Time/Date Information: "Enter the time in 24 hour clock format").

Claim or Claim Element	Prior Art (Isoetec)
26. The apparatus according to claim 24 wherein said time quantity is the date.	The time quantity in Isoetec can be the date. *See, e.g.*, page 7.14 (Time/Date Information: ... "Enter the date in month-day-year format").

Claims 25 and 26 specify that the time quantity is a time of day or date, respectively. Both such time quantities can be entered into, stored, and displayed by the Isoetec device.

IV. Additional Notes to the Examiner

It is the opinion of the requesting party that the Weinberger Patent has been, and continues to be, used to grossly abuse the United States Patent system and the legal system that supports it. The patent itself admits that the basic features described in the patent were at the time common in "complex phone systems" at the time the patent was filed:

> It has been known to design complex phones that route calls along selected switching points via selected tie lines to establish a least cost route. For example, U.S. Pat. No. 4,122,308 to Weinberger et al. discloses such a device. It has been found, however, that many consumers are unwilling to purchase a complex telephone device in substitution for the phone already used in the home. Typically, consumers buy a phone for aesthetic or economic reasons. Consumers have been found unwilling to purchase complex phone equipment in lieu of phones already purchased which are more simple, smaller and aesthetically pleasing to the eye.

Background of Invention, col. 1, lines 24-35.

However, the claims were constructed in such a way as to not exclude those existing technologies. The requesting party believes that the technology disclosed in the Weinberger Patent is not patentably distinct from the prior art, even if limited to "simple" devices designed for use with a single home telephone. After all, some of the prior art, both previously cited and cited herein, discloses such simple devices. However, at the very least the Weinberger Patent should not be allowed to encompass complex, multi-phone least cost routing telephone systems that existed well before its filing date, such as those disclosed and described in Vodavi, Toshiba, and Isoetec.

The Weinberger Patent has been asserted against dozens of complex, multiple-line business telephone systems in court. *See, e.g.*, Alcatel Internetworking, Inc. v. Rates Technology, Inc., Case No. 03-9449 (C.D. Cal.); Rates Technology Inc. v. Mitel Networks Corp. et al., Case No. 04-4019 (E.D. N.Y.); OpenLCR.com, Inc., et al. v.

Rates Technology Inc., Case No. 00-WY-631-CB (D. Col.); Rates Technology Inc. v. Norten Networks Corp. and Verizon Communications, Inc., Case No. 02-CV-4570 (E.D. N.Y.); Rates Technology Inc. v. Simpligent, LLC, Case No. CV-052729 (E.D. N.Y.). The products in question in these cases would all be considered "complex" phone systems. The list above includes the pending litigation between the Weinberger Patent assignee and the requesting party.

It is also the belief of the requesting party that the Weinberger Patent assignee is attempting to unlawfully extend its patent rights from a now-expired patent (U.S. Patent No. 4,122,308) by enforcing the Weinberger Patent on developers and distributors of complex, multi-phone, telephone systems, which were widely used in the telephone systems industry well prior to the filing of the Weinberger Patent, as demonstrated by the prior art cited herein.

The requesting party also notes that, to the extent that any of the limitations set forth in the claims of the Weinberger Patent are not found to be anticipated by the cited prior art, those limitations should alternatively be considered obvious variations in view of the combination of references cited, and further in view of the knowledge of one having ordinary skill in the field of telephony.

The Weinberger Patent assignee has indicated to the requesting party its intention to swear behind the prior art cited herein. However, as previously mentioned, each of the references cited herein was published more than one year prior to the filing date of the Weinberger Patent and therefore are not susceptible to being sworn behind. 37 C.F.R. 131 ("Prior invention may not be established . . . if . . . the rejection is based upon a statutory bar."). Of course, 102(b) prior art, as cited herein, cannot be sworn behind regardless of whether it is used to support an anticipation or an obviousness rejection. *See* In re *Corcoran*, 640 F.2d 1331, 1333 (CCPA 1981) ("The fundamental principle . . . is that an inventor is given a grace period of one year, within which to file his patent application in this country, after the occurrence of the events named in 35 USC 102(b), which events are such as to make the invention claimed in the application available to the public in this country. Furthermore, . . . the principle, which is intended to prevent dilatory filing, applies not only to the precise matter disclosed by the events of § 102(b) but also to claimed inventions which would be obvious from the matter disclosed by the events in the sense of § 103, to those of ordinary skill in the art as of a date one year prior to the filing of the U.S. application.").

V. Conclusion

For at least each of the reasons set forth above, a substantial new question of patentability has been presented and each of claims 1-26 of the Weinberger Patent should be rejected as unpatentable over the prior art.

Respectfully submitted,

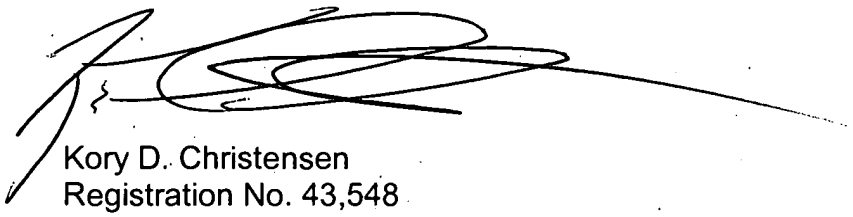

Kory D. Christensen
Registration No. 43,548
Stoel Rives LLP
One Utah Center
201 South Main Street, Suite 1100
Salt Lake City, Utah 84111
Telephone: (801) 578-6993
Facsimile: (801) 578-6999

CERTIFICATE OF SERVICE

I hereby certify on this 14th day of February, 2006, that I caused a true and correct copy of the attached REQUEST FOR REEXAMINATION OF U.S. PATENT NO. 5,425,085 to be delivered by U.S. Mail to the following:

Robert L. Epstein, Esq.
Epstein Drangel Bazerman & James, LLP
60 East 42nd Street, Suite 820
New York, NY 10165

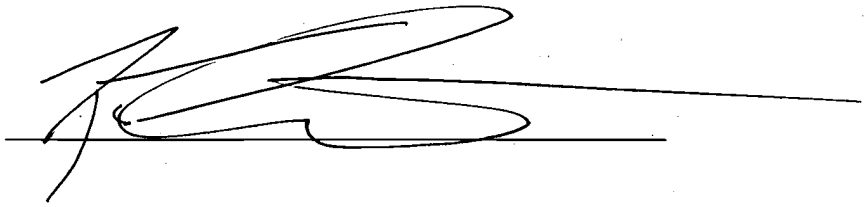

US005425085A

United States Patent [19]

Weinberger et al.

[11] Patent Number: 5,425,085

[45] Date of Patent: Jun. 13, 1995

[54] **LEAST COST ROUTING DEVICE FOR SEPARATE CONNECTION INTO PHONE LINE**

[75] Inventors: **Gerald J. Weinberger**, Smithtown; **Roger C. Lee**, Wading River, both of N.Y.

[73] Assignee: **Rates Technology Inc.**, Smithtown, N.Y.

[21] Appl. No.: **210,670**

[22] Filed: **Mar. 18, 1994**

[51] Int. Cl.[6] **H04M 15/00**; H04M 7/00

[52] U.S. Cl. **379/112**; 379/111; 379/113; 379/114; 379/116; 379/130; 379/131; 379/219; 379/220; 379/221

[58] **Field of Search** 379/111-116, 379/130-132, 219-221

[56] **References Cited**

U.S. PATENT DOCUMENTS

4,122,308	10/1978	Weinberger et al.	379/112
4,136,262	1/1979	Clark, Jr.	379/143
4,198,545	4/1980	Haist et al.	379/113
4,209,668	6/1980	Weinberger et al.	379/114
4,410,765	10/1983	Hestad	379/112
4,585,904	4/1986	Mincone	379/131
4,656,657	4/1987	Hunsicker	379/131
4,751,729	6/1988	Treat	379/113
4,813,065	3/1989	Segala	379/112
4,888,822	12/1989	Weinberger et al.	379/130
4,935,956	6/1990	Hellwarth	379/114
5,163,042	11/1992	Ochiai	379/220

Primary Examiner—Stephen Chin
Assistant Examiner—Vijay Shankar
Attorney, Agent, or Firm—James & Franklin; Harold James; Robert L. Epstein

[57] **ABSTRACT**

A device interconnects within the phone line coming from a first phone and routes telephone calls along a least cost route originating from the first telephone to a second telephone via the network. A housing forms an enclosure and has a first jack for interconnection to the phone side of the phone line and a second jack for interconnection to the network side of the phone line. The housing forms an enclosure which includes a switch for disconnecting the first phone from the network. The device generates a source of current through the switch to the first phone corresponding to the amount of current provided by the phone network. A database stores billing rate parameters for determining various communication paths of different carriers based on parameters such as the time and date of the call. Phone calls from the first phone are detected and stored. The database is addressed and a plurality of communication switch paths are identified as well as the cost rate of each path. The cost rates for each identified path are compared to determine a least cost route for the call. The device generates a number sequence corresponding to a desired carrier so that the dialed call is routed through the second jack and phone line to the selected communication path and carrier so as to establish a switched connection between the first and second phones.

26 Claims, 6 Drawing Sheets

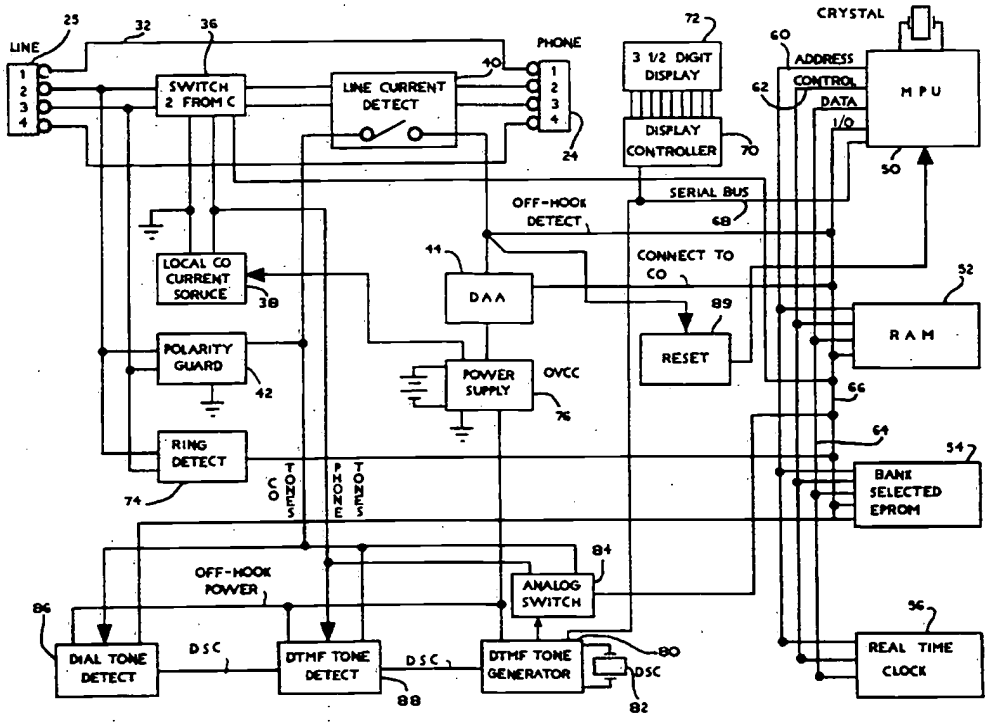

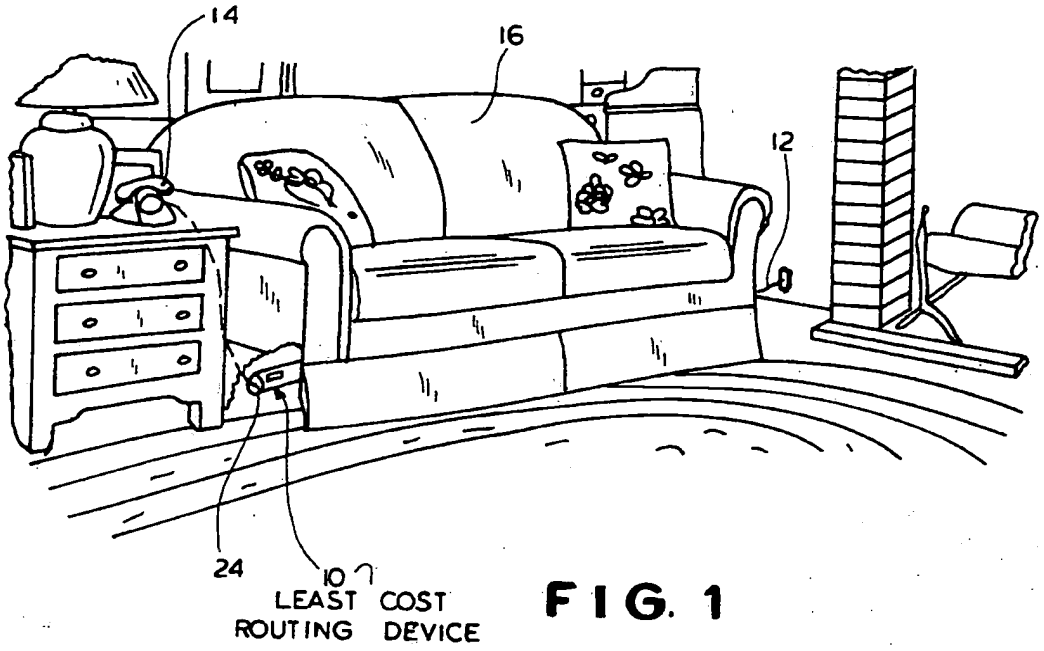
14
16
12
24
10
LEAST COST
ROUTING DEVICE

FIG. 1

FIG. 7

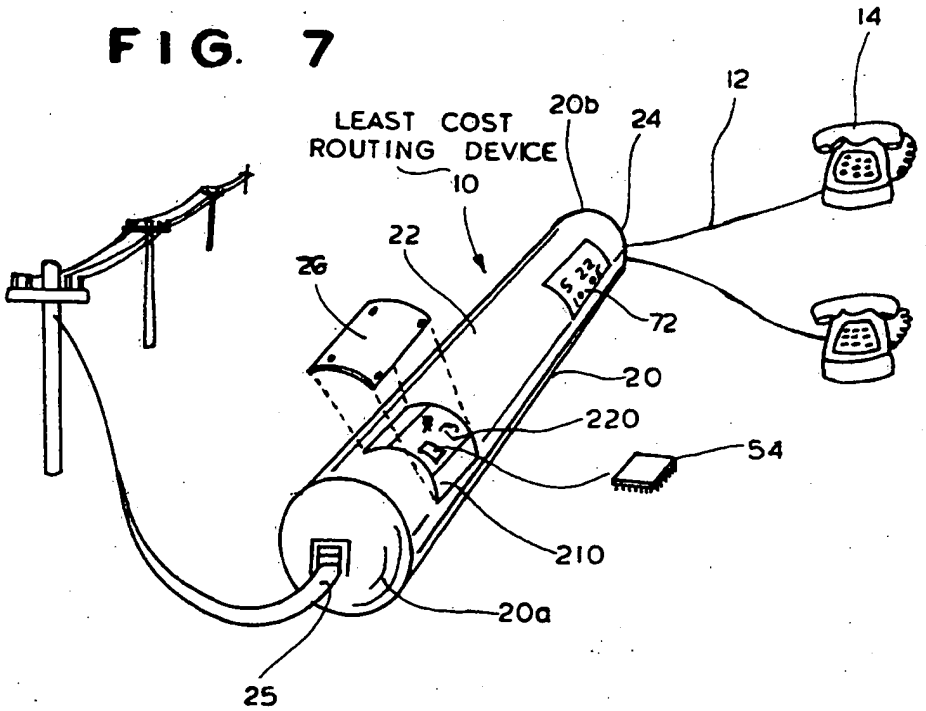
14
12
LEAST COST
ROUTING DEVICE
20b
24
10
22
26
72
20
220
54
210
20a
25

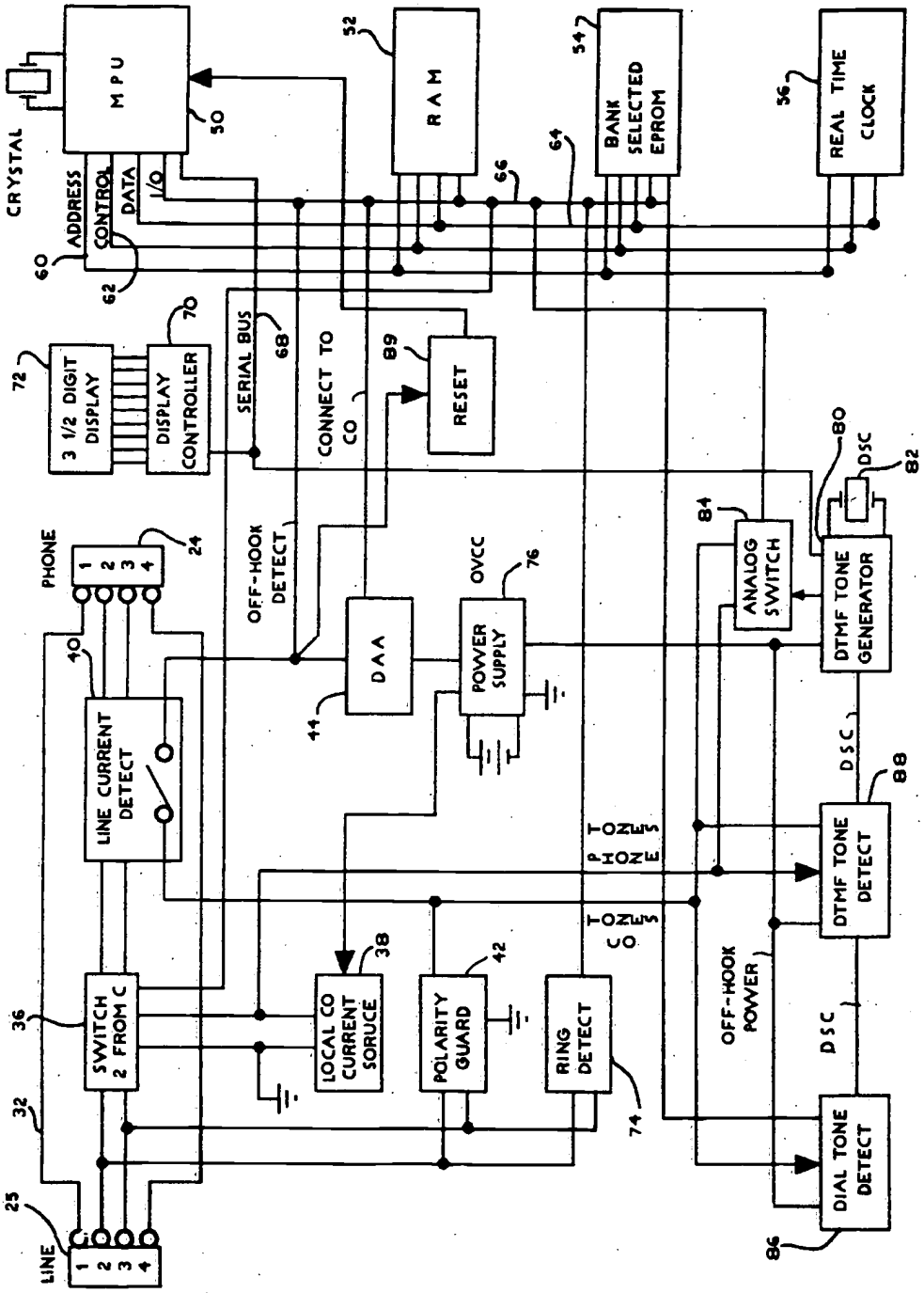
MPU
50
RAM
52
BANK SELECTED EPROM
54
REAL TIME CLOCK
56
CRYSTAL
ADDRESS
CONTROL
DATA
I/O
60
62
64
66
SERIAL BUS
68
DISPLAY CONTROLLER
70
3 1/2 DIGIT DISPLAY
72
CONNECT TO CO
RESET
89
OFF-HOOK DETECT
PHONE
24
40
DAA
41
OVCC
76
POWER SUPPLY
ANALOG SWITCH
84
DSC
80
82
DTMF TONE GENERATOR
LINE CURRENT DETECT
DSC
88
DTMF TONE DETECT
TONES PHONE
TONES CO
SWITCH 2 FROM C
36
LOCAL CO CURRENT SORUCE
38
POLARITY GUARD
42
RING DETECT
74
OFF-HOOK POWER
DSC
32
DIAL TONE DETECT
86
25
LINE
1
2
3
4

FIG. 2

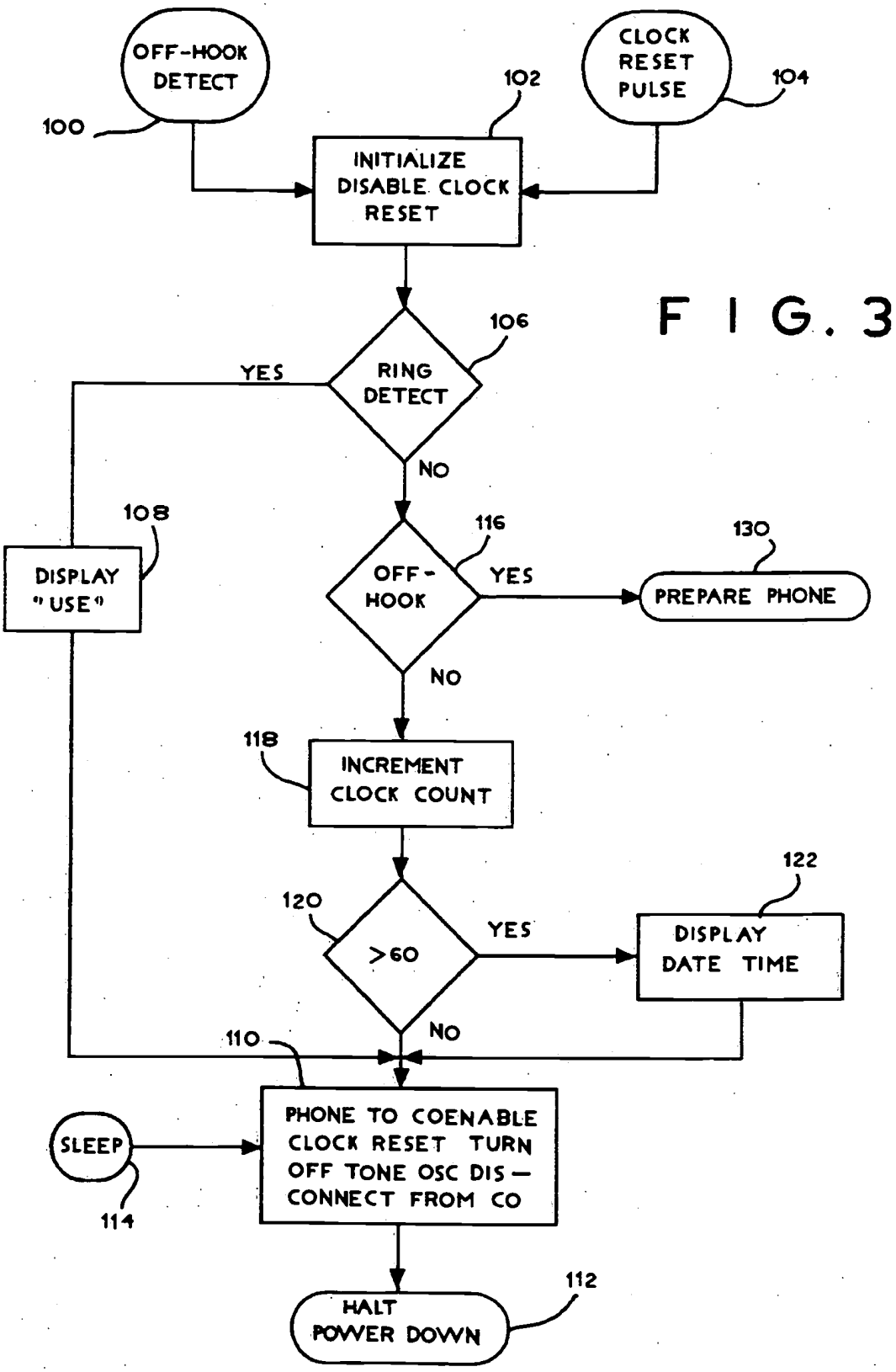
OFF-HOOK DETECT
100
CLOCK RESET PULSE
104
102
INITIALIZE DISABLE CLOCK RESET
106
RING DETECT
YES
NO
108
DISPLAY "USE"
116
OFF-HOOK
YES
130
PREPARE PHONE
NO
118
INCREMENT CLOCK COUNT
120
>60
YES
122
DISPLAY DATE TIME
NO
110
SLEEP
114
PHONE TO COENABLE CLOCK RESET TURN OFF TONE OSC DIS— CONNECT FROM CO
112
HALT POWER DOWN

FIG. 3

FIG. 4

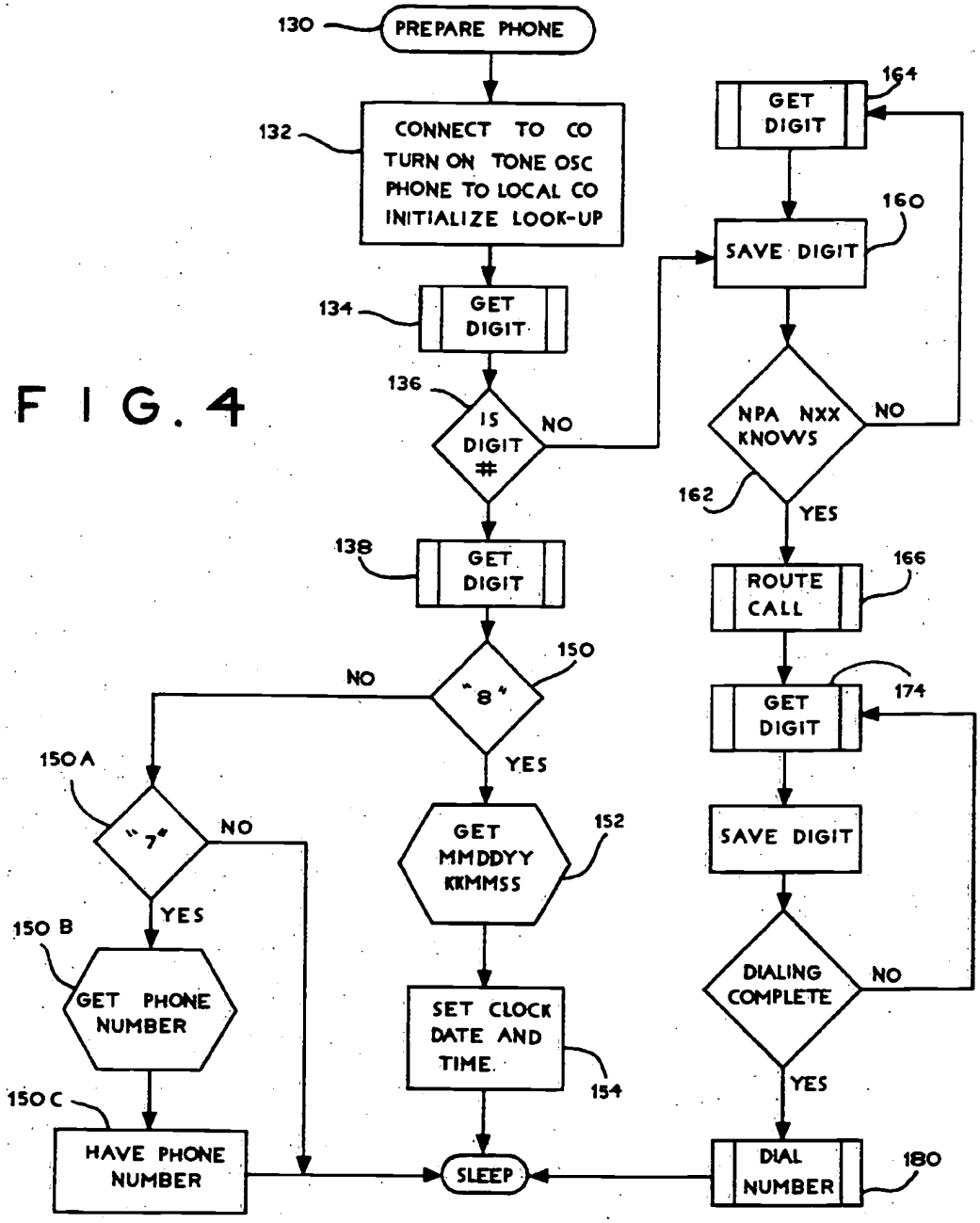
130
PREPARE PHONE
132
CONNECT TO CO
TURN ON TONE OSC
PHONE TO LOCAL CO
INITIALIZE LOOK-UP
134
GET DIGIT
136
IS DIGIT #
NO
138
GET DIGIT
150
"8"
NO
YES
150A
"7"
NO
YES
150 B
GET PHONE NUMBER
150 C
HAVE PHONE NUMBER
152
GET MMDDYY KKMMSS
SET CLOCK DATE AND TIME
154
SLEEP
164
GET DIGIT
160
SAVE DIGIT
NPA NXX KNOWS
NO
162
YES
166
ROUTE CALL
174
GET DIGIT
SAVE DIGIT
DIALING COMPLETE
NO
YES
DIAL NUMBER
180

FIG. 4A

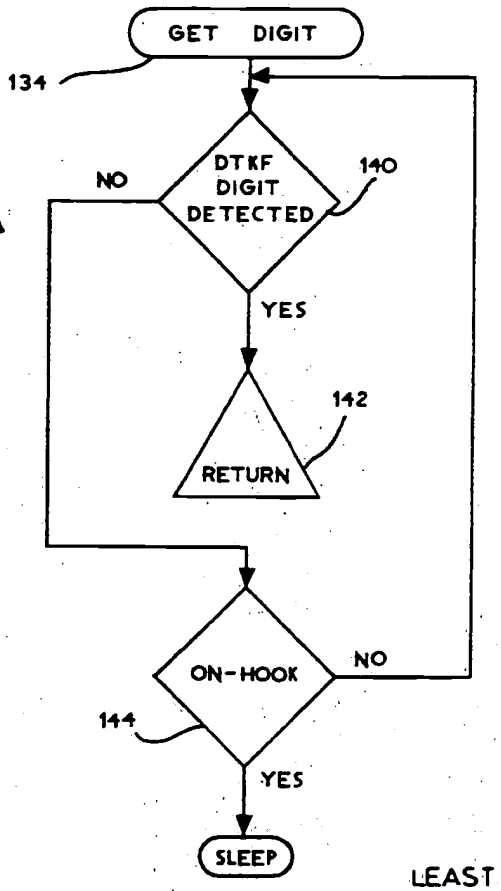
GET DIGIT
134
DTKF DIGIT DETECTED
140
NO
YES
142
RETURN
ON-HOOK
NO
144
YES
SLEEP

FIG. 6

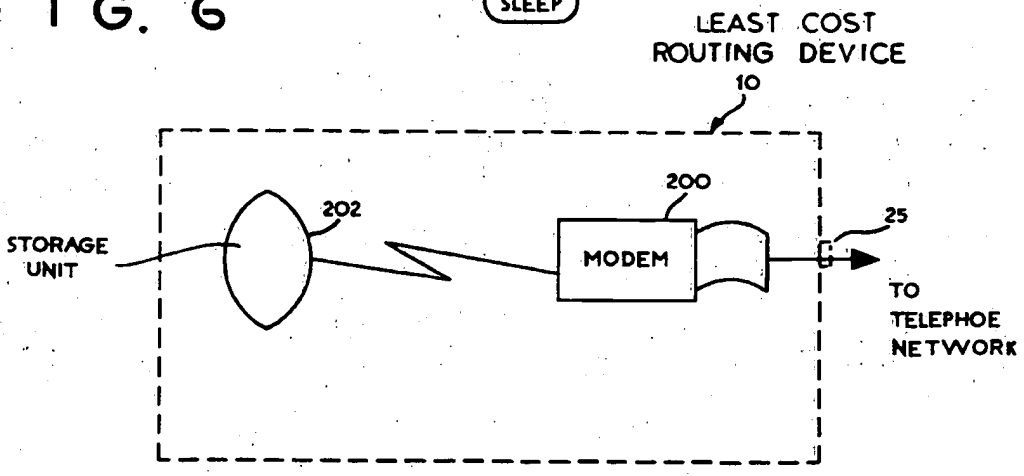
LEAST COST ROUTING DEVICE
10
200
202
25
STORAGE UNIT
MODEM
TO TELEPHOE NETWORK

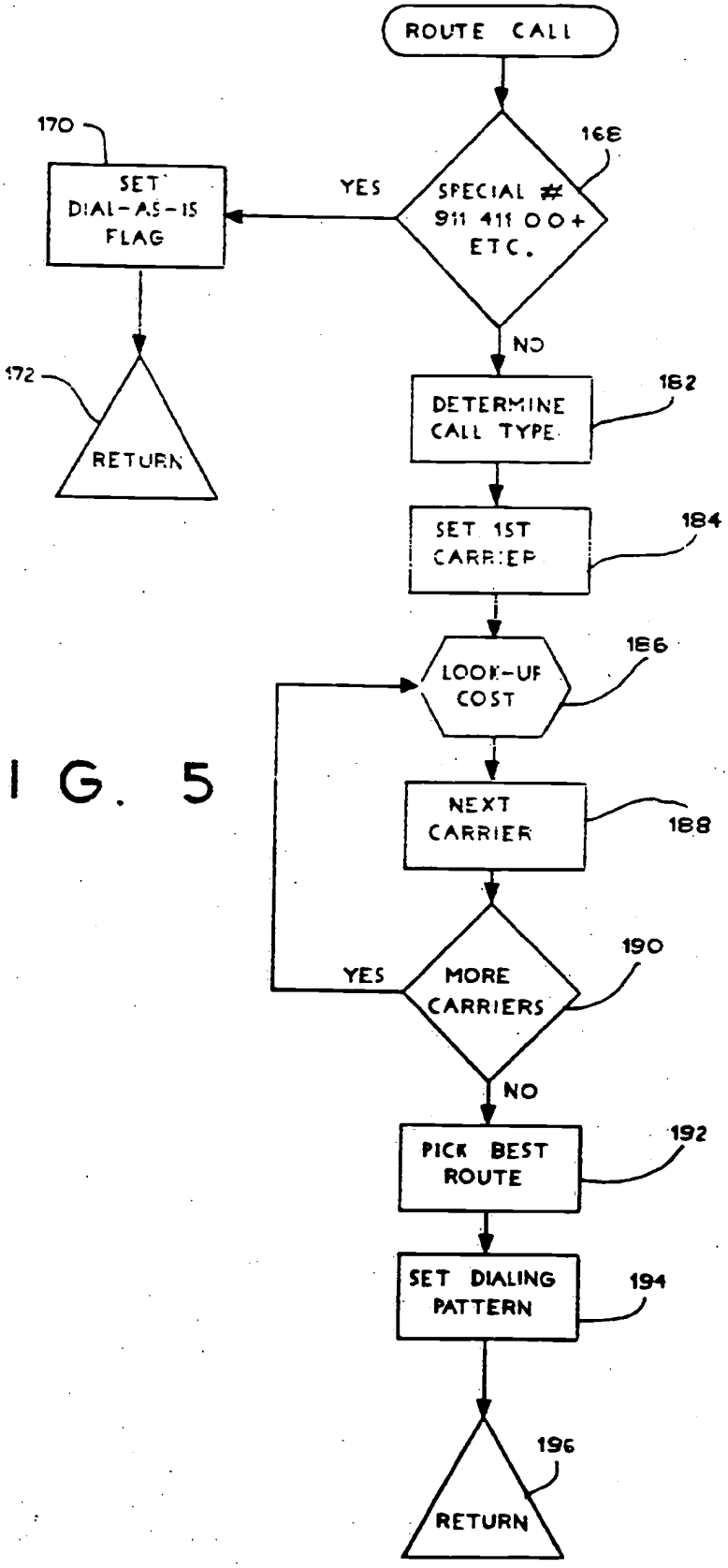
ROUTE CALL
168
SPECIAL #
911 411 00+
ETC.
YES
170
SET
DIAL-AS-IS
FLAG
NO
172
RETURN
182
DETERMINE
CALL TYPE
184
SET 1ST
CARRIER
186
LOOK-UP
COST
188
NEXT
CARRIER
190
MORE
CARRIERS
YES
NO
192
PICK BEST
ROUTE
194
SET DIALING
PATTERN
196
RETURN

FIG. 5

LEAST COST ROUTING DEVICE FOR SEPARATE CONNECTION INTO PHONE LINE

FIELD OF THE INVENTION

This invention relates to a device which can be connected directly into the phone line for routing phone calls made from a first phone along the least cost path of the telephone network to a second phone.

BACKGROUND OF THE INVENTION

The advent of numerous local and long distance telephone carriers has resulted in a wide selection of different carriers which have different telephone cost rates depending on the time of day, the number of phone calls, the location of a calling party and other factors. Typically, a consumer chooses one carrier, and maintains that carrier account for all long distance calling needs, and in some instances for local calls also. With increased competition among interstate, intrastate, interlata and intralata phone carriers, a caller could save money if different carriers are chosen for each particular phone call to a particular destination.

It has been known to design complex phones that route calls along selected switching points via selected tie lines to establish a least cost route. For example, U.S. Pat. No. 4,122,308 to Weinberger et al. discloses such a device. It has been found, however, that many consumers are unwilling to purchase a complex telephone device in substitution for the phone already used in the home. Typically, consumers buy a phone for aesthetic or economic reasons. Consumers have been found unwilling to purchase complex phone equipment in lieu of phones already purchased which are more simple, smaller and aesthetically pleasing to the eye.

SUMMARY OF THE INVENTION

One of the features of the present invention is a device that may be connected within the phone line separate and apart from the telephone and which routes telephone calls along a least cost route originating from a first telephone through the telephone network to a second telephone.

Another feature of the present invention is a device that can be connected directly within the telephone line originating from a first telephone and can be hidden from view such as behind a furniture piece.

Another feature of the invention is a device for routing telephone calls along a least cost route that can be quickly attached and detached from the telephone line such as by telephone jacks.

In accordance with the present invention, the device routes telephone calls along a least cost route originating from the first telephone through the telephone network to a second telephone. As is conventional, the network has a plurality of alternate communication switch paths corresponding to different carriers which can be chosen to route the call.

A housing forms an enclosure and has jacks mounted on the housing for interconnection to the phone line. A first jack interconnects to the phone side of the phone line and a second jack interconnects to the network side of the phone line. The device components are contained in the enclosure and includes a switch which operatively connects to the first jack for disconnecting the first phone from the network. A current source is generated through the switch to the first phone and corresponds to the current provided by the phone network at the central office. A database stores billing rate parameters for determining a least cost communication path based on the least cost routing parameters, which could include such parameters as the time and date of the call.

Means is operatively connected to the switch for detecting and storing a dialed phone number originating from the first phone. The database is addressed for identifying a plurality of communication switch paths to the dialed number as well as the cost rate of each path. The cost rate of each path is compared to determine a least cost route for the call. A tone generator is connected to the switch means and the second jack and generates a number sequence corresponding to the desired carrier so that the dialed call is routed through the second jack and phone line to the selected communication carrier so as to establish a switched connection between the first and second phones.

When a call is incoming, the switch connects the first phone to the network. An internal power supply provides power to the current generating means. In one aspect of the invention, the means generating the number sequence is a dual tone multifrequency generator that generates the necessary tones to the central office for establishing the least cost route. The detecting means includes, but is not limited to a dual tone multifrequency detector for detecting tones sent by the first phone.

The housing may be a number of different configurations. In one embodiment it is substantially cylindrical with opposing ends. The first jack is positioned on one end and the second jack is positioned on the other end.

In another aspect of the invention, the database is updated with a current billing rate schedule. In one aspect of the invention the update means includes a circuit board mounted within the enclosure, and the database is contained on a removable chip positioned on the circuit board. The housing may include a removable cover for accessing the chip on the circuit board to replace it with an updated chip. In still another aspect of the invention, the device includes a modem for receiving signals through the telephone line and downloading updated information to the database.

In still another aspect of the invention, a display is mounted on the housing and visibly displays the time and date. The time and date display receives a predetermined dial sequence from the first phone corresponding to a predetermined date and time to be displayed. After receiving the predetermined dial sequence, the display time and date is changed based on the received signals. In some designs, the date and time display can also be changed manually.

DESCRIPTION OF THE DRAWINGS

The foregoing advantages and features of the present invention will be appreciated more fully from the following description, with reference to the accompanying drawings in which:

FIG. **1** is an environmental view showing the device in accordance with the present invention positioned behind a sofa in a household.

FIG. **2** is a block diagram of the overall circuit used in the device of the present invention.

FIG. **3** is a flow chart depicting the initializing of the device and flow of an incoming call to the phone.

FIG. **4** is a flow chart depicting the routine for changing the display and dialing the codes for least cost routing in accordance with the present invention.

FIG. 4A is a flow chart illustrating the routine for obtaining digits for a least cost route.

FIG. 5 is a flow chart of a subroutine in the flow chart of FIG. 4 showing a database look-up routine.

FIG. 6 is a block diagram of the device with a modem.

FIG. 7 is a isometric view of one design of the device showing a cover that has been removed for accessing the chip to update the database.

DETAILED DESCRIPTION OF THE INVENTION

Referring now to FIG. 1, the device 10 of the present invention is shown connected or "plugged" into the phone line 12 of a first telephone 14 in the environment of a household 15 and positioned out of sight behind a sofa 16. As evident, the device of the present invention is advantageous because it can be readily connected within the phone line 12 and hidden from view without purchasing a new phone. Many consumers select phones based on aesthetic and economic reasons, and some consumers are unwilling to spend large sums for complex and unwieldy phones.

As shown in FIGS. 1 and 7, the device 10 includes a housing 20 which forms an enclosure 22. In the illustrated embodiment, the housing 20 is cylindrically configured with two opposing ends 20*a*, 20*b*. Although the cylindrical configuration is illustrated, any configuration can be used depending on the designer's choice and purchaser's desire. It is even possible to design the device 10 to be an ornament that can rest on a table or other readily visible place. A cylindrical configuration for the housing 20 has been found easy to mold and relatively inexpensive. AS shown in the drawings, the housing includes a first jack 24 for connecting "plugging" to the phone side of the phone line 12 and a second jack 25 for connection or "plugging" to the network side of the phone line.

The electronic components forming the device 10 are mounted within the enclosure, typically on a circuit board as shown in FIG. 7. The housing can be designed with a removable cover 26 (FIG. 7) to access the components, or a removable end where the circuit board can be slid outward to access any components.

Referring now to FIG. 2, the basic components used in the device of the present invention are shown in the block diagram. As noted before, the second phone jack 25 has one line 32 connecting to the first phone jack 24 positioned on the other end of the cylindrically configured housing. The phone jack 25 connects to a switch 36, referred to as a 2 Form C switch, which switches the phone off the network to the other components contained in the device. The switch 36 connects to a "local CO (central office)" current source 38 which generates a current corresponding to the current supplied by the central office of the network. The switch 36 connects and disconnects the phone from the network into the current source 38, which in turn supplies a current to the phone equivalent to the current supplied by the central office of the network. The switch 36 also connects to a line current detector 40 (off-hook detector) which detects an off-hook or on-hook state of the phone. A combination polarity guard 42 and Direct Access Arrangement 44 (DAA) interfaces and allows communication to the network. The line current detector can be formed from numerous types and brands of device. One available device is a teltone M949 device.

The controller for the device 10 includes the standard components of a microprocessor including a microprocessing unit 50 (MPU) such as a Toshiba TMPZ 84C011 and a RAM chip 52 such as a generic chip sold by Hyundai under the designation HY6116. A bank selected Eprom 54 for storing the database is also included and can be a generic Eprom chip such as a Toshiba TC574000 chip with more Eprom than the microprocessor can directly address. A real time clock 56 maintains the proper time and provides signals for controlling the device. An example of a clock chip which can be used for the device is an Epsom RTC62421B chip. The microprocessing unit 50 includes the conventional address, control, and data buses 60, 62, 64 and an input output bus 66.

A serial bus 68 connects from the MPU 50 to a display controller 70 which controls a 3½ digit display 72. The 3½ digit display 72 displays the time and date and is positioned on the outside of the housing where it can be readily read. A ring detect circuit 74 is interconnected to the input-output bus and the incoming line jack 30 and detects the ringing of the phone. A power supply 76 is also included and provides the current for the local CO current generator 38. In the present invention, power can be generated from the phone company when the first phone is "off-hook", or generated from the battery when the first phone is "on-hook".

Once a minute the device will update the date and time on the display 72 and then revert to a passive state also known as the "sleep" state. It is not possible to draw power for the device 10 from the phone company in an "on-hook" condition. Therefore, the power supply 76 provides power once a minute to change the display 72 to a new setting. A DTMF (dual tone multi-frequency) tone generator 80 includes a crystal oscillator 82 which together generate the tone frequencies necessary to generate the tones for the dialing sequences. An analog switch 84 allows switching to either the-phone or the network. The dial tone detect circuit 86 connects to the line coming from the polarity guard 42 and connects to the line detector 40. The DTMF tone detector 88 detects the tones generated from the first phone. The reset circuit 89 allows for resetting the entire circuit from a begin point.

Referring now to FIGS. 3-5, there are illustrated flow charts depicting the operation of the device in accordance with the present invention. The steps are enumerated beginning with the numeral 100 and follow through with sequential even numbers in most cases.

Initially, as shown in FIG. 3, in step 100 the device detects an "off-hook" condition for the first phone, such as when the handle is raised from the cradle of a phone. The device is initialized in step 102 and the clock reset is disabled. The initializing step 102 can also occur when the reset occurs such as a startup in step 104. Thus, it is evident that a reset occurs in two conditions: 1) when the phone goes "off hook" or 2) when the real time clock emits a pulse (such as once a second) for setting the clock.

In step 106 the ring detect circuit 74 detects if there is a ring. If a ring is detected, the word "USE" in step 108 is displayed on the 3½ digit display 72 corresponding to the device 10 being in use. The phone remains connected by the switch 36 to the central office network and the DTMF tone oscillator and generator 80, 82 operation are terminated. The power is shut down in step 12 of the device to allow communication between the first phone and the second phone, who was the

calling party in this instance. The device **10** has gone into a passive mode also referred to as a "sleep mode" in step **14**.

If during initialization in step **106** the ring detector did not detect a ring, the device **10** then checks for an off-hook condition in step **16**. If there is no off-hook condition, then the device is restarting such as from a clock pulse. The clock count is incremented in step **118**. If the clock count is greater than 60 seconds in step **120**, then the display controller **70** displays a new date and time on the 3½ digit display **72** in step **122**. If the count is not greater than 60 seconds then the phone remains connected to the central office (phone network) in step **110** and the phone has gone into a passive mode in step **112**.

If the off-hook condition is sensed in step **106**, the phone is prepared in step **130**, i.e., the device is prepared to receive DTMF tone signals from the first phone (FIG. **4**). In this step the device **60** connects to the central office (phone network) in step **132** and the DTMF tone generator **80**, **82** is set to the "on" position. The first phone is connected via the switch **36** to the local central office, i.e., the local current source **38**, to generate a current through the switch to the jack **34** and to the first phone. Additionally, in step **132**, the device is initialized to begin the lookup routines in the database.

The caller at the first phone then dials a number and the device **10** enters a subroutine known as "get digit" in step **134** (FIG. **4A**). The DTMF tone detector **88** detects each digit as it is called. If the digit is a "pound sign" ("#") in step **136**, then the device is initialized to prepare the date and time on the display **72**. Although the "pound sign" is illustrated as the initial sequence code for settling the time and date, it is readily apparent that any sequence of codes can be used as long as the code is not the beginning of a telephone number.

If the digit is a "pound sign", the "get digit" subroutine is followed once again in step **138**. The "get digit" subroutine is shown in greater detail on the left side of FIG. **4**. A DTMF digit is detected in step **140** and the routine then returns in step **142** to the mainflow chart. If the digit is not detected, a test is made to see whether the first phone current is on hook in step **144**. If the first phone is not on hook the subroutine continues to detect digits. If the first phone is on hook, then the device goes into "sleep" or passive mode.

If the numeral **3** is detected in step **150**, corresponding to the letter D, then the DTMF tones following are input as the date, such as the month, day and year, as well as the time, such as the hour, minute and seconds in that order in step **152**, and displayed on the 3½ digit display in step **154**. The device then routes into the passive "sleep" mode. If the numeral "**3**" was not detected in step **150** the device then routes into the sleep mode, or could implement other special functions indicated by the digit, e.g. (test modes). For example, if the number "**7**" is detected (step **150A**) for the phone, corresponding to the letter "P", the telephone number for the device is obtained (step **150B**), and saved (step **150C**). Typically, this routine can be started by the caller pressing the pound (#) key, and the number being stored as NPA NXX XXXX.

If the pound sign was not detected in step **136**, the detected digit is saved in step **160** and the detected digits are then analyzed in step **12** to determine if the area code and exchange (the NPA NXX) are known in step **12**. If they are not known, the get "digit routine" is repeated in step **14** until the NPA NXX code is known. The call is then routed in step **16** in a route call routine, which is set forth in FIG. **5**. The device distinguishes from the dialed digit if an area code (NPA) has been dialed. If the NPA has not been dialed, this device uses the NPA from the data specified for the device location.

As shown in FIG. **5**, the device **10** initially determines whether the area code and exchange digits known are in a special category in step **168** such as 911, 411, 800, or 900 numbers. If the dial routine is a special number, the telephone signal is flagged in step **170** and returned to the main routine where further digits such as the last four digits of the phone number are obtained and received in step **174**. The digits are saved in step **176** and the dialing is completed in step **178**. The number is then dialed in step **180** and the device routes into the passive or sleep mode and the call completed. If the dialing is not complete, then the get digit routine is repeated until all digits from the telephone number are obtained.

If the number in step **168** is not a special number (FIG. **5**), the call type is determined in step **182**, e.g. if the call is local, interlata, intralata, interstate, intrastate or a combination thereof. In step **284** the first carrier is set and the cost is looked up in the database in step **186**. The next carrier is then set in step **188**. If there are more couriers in step **190**, the look up cost is repeated until all carriers are exhausted. In step **192** the best carrier is picked and the dialing pattern set in step **194**. The sequence is then returned in step **196** to the route call routine of step **166**.

Because the rates among different carrier may change monthly, or even daily and weekly depending on circumstances, the database may be updated. In one embodiment, the database can be downloaded through a modem **200** (FIG. **6**) to a storage unit **202**. However, this method will require additional components such as a modem.

In another embodiment, the Eprom chip containing the database is removed, such as by accessing the chip through an opening **210**. Once the chip is removed, another updated chip is substituted and the housing cover **26** replaced on the device **10**. In an alternative embodiment, an end can be removed, and the entire circuit board **220** holding the components slid outwardly to expose the chips to be replaced. Once any chips are replaced, the circuit board can be slid back into the housing.

The device **10** of the present invention is advantageous over prior art call metering devices that are incorporated within the phone itself. The device of the present invention can be connected into the phone line coming from a phone and easily hidden from view or placed in an inconspicuous location, and a consumer does not have to purchase anew phone. Basic microprocessor and other circuits are used and can be contained in an attractive housing, and the date and time can be easily set by the keypad of a standard telephone. Additionally, in some instances, the determined cost of a phone call may be given a bias for preference to a given carrier. For example, if a first carrier is no greater than 5% additional cost than a second carrier, that first carrier may be given a preference.

It is to be understood that the above description is only one embodiment of the invention. Numerous other arrangements may be devised by one skilled in the art without departing from the spirit and scope of the invention.

That which is claimed is:

1. A device for routing telephone calls along a least cost route originating from a first telephone to a second telephone having an associated telephone number via a network having a plurality of alternate communication switch paths corresponding to different carriers which can be chosen to route the call and normallyproviding a current to said first telephone when said first telephone is in use, comprising

a housing forming an enclosure and comprising first jack means for connection to said first telephone and second jack means for connection to said network

switch means operatively connected to said first jack means for disconnecting said first telephone from said network,

means operatively connected to said switch means for generating a current through said switch means to the first telephone, corresponding to a current provided by said network,

database means for storing billing rate parameters for determining a least cost communication path for call corresponding to said telephone number,

means operatively connected to said switch means for detecting and storing said telephone number originating from the first telephone,

means for addressing said database means for identifying a plurality of communication switch paths to said second telephone and the cost rate of each path,

means for comparing the cost rate of each path so as to determine a least cost route, and

means operatively connected to said switch means and said second jack means for generating a number sequence corresponding to a desired carrier so that said call is routed through said second jack means to the selected communication path and carrier to establish a switched connection between said first telephone and said second telephone phone.

2. The device according to claim 1 wherein said least cost communication path parameters include the time and date of the call.

3. The device according to claim 1 wherein said switch means connects said first telephone to said network during an incoming call.

4. The device according to claim 1 including an internal power supply connected to said means for generating a current.

5. The device according to claim 1 wherein said means for generating said number sequence comprises a dual tone multifrequency generator.

6. The device according to claim 1 wherein said housing is substantially cylindrical with opposing ends, wherein said first jack means is positioned on one end and said second jack means is positioned on the opposite end.

7. The device according to claim 1 wherein said detecting means includes a dual tone multifrequency detector.

8. The device according to claim 1 including means for maintaining the time and date so as to determine the least cost route based on the time and date of the call.

9. The device according to claim 1 wherein said cost may be given a bias for preference to a given carrier.

10. The device according to claim 1 including means for updating said database means with a current billing rate schedule.

11. The device according to claim 10 wherein said update means includes a circuit board mounted inside said enclosure, and said database means comprises a removable chip on said circuit board, and means for accessing said removable chip from outside said housing.

12. The device according to claim 11 wherein said means for accessing said removable chip includes a removable cover on said housing for accessing said chip.

13. The device according to claim 10 wherein said update means includes a modem for receiving signals through said telephone line and downloading the update information.

14. A device for routing telephone calls along a least cost route originating from a first telephone to a second telephone having an associated telephone number via a network having a plurality of alternate communication switch paths corresponding to different carriers which can be chosen to route the call and normally providing a current to said first telephone when said first telephone is in use, comprising

a housing forming an enclosure and comprising first jack means for connection to said first telephone, and second jack means for connection to said network, means positioned on said housing for visibly displaying the time and date,

switch means operatively connected to said first jack means for disconnecting said first telephone from said network,

means operatively connected to said first jack means for disconnecting said first telephone from said network,

means operatively connected to said switch means for generating a current through said switch means to said first telephone corresponding to said current provided by said network,

means operatively connected to said time and date display means and said switch means for receiving a predetermined dial sequence from said first telephone corresponding to a predetermined date and time to be displayed and means for changing the displayed time and date based on the received signals,

database means for storing billing rate parameters for determining a least cost communication path for a call corresponding to said telephone number, based on such factors as the time and date of the call,

means operatively connected to said switch means for detecting and storing said telephone number originating from the first telephone,

means for addressing said database means for identifying a plurality of communication switch paths to said second telephone and the cost rate of each path,

means for comparing the cost rate of each path so as to determine a least cost route, and means operatively connected to said switch means and said second jack means for generating a number sequence corresponding to a desired carrier so that said call is routed through said second jack means to the selected communication path and carrier to establish a switched connection between said first telephone and said second telephone.

15. The device according to claim 14 including means positioned on said housing for manually changing the date and time of the display.

16. The device according to claim 14 wherein said means for generating said number sequence comprises a dual tone multifrequency generator.

17. The device according to claim 14 wherein said housing is substantially cylindrical with opposing ends, wherein said first jack means is positioned on one end and second jack means is positioned on the other end.

18. The device according to claim 14 wherein said detecting means includes a dual tone multifrequency detector.

19. The device according to claim 14 including means for updating said database means with a current billing rate schedule.

20. The device according to claim 19 wherein said update means includes a circuit board mounted inside said enclosure, and said database means comprises a removable chip on said circuit board, and means for accessing said removable chip from outside said housing.

21. The device according to claim 20 wherein said means for accessing said removable chip includes a removable cover on said housing for accessing said chip.

22. The device according to claim 19 wherein said update means includes a modem for receiving signals through said telephone line and downloading the update information.

23. The device according to claim 14 wherein said cost may be given a bias for preference to a given carrier.

24. An apparatus for displaying a time quantity which can be initiated from a telephone of the type capable of generating dual tone multifrequency signals comprising

a housing forming an enclosure and comprising first jack means for interconnection to said telephone, and second jack means for connection to a telephone switching network, said network normally providing a current to said telephone when said telephone is in use, means positioned on said housing for visibly displaying a time quantity,

switch means operatively connected to said first jack means for disconnecting said telephone from said network,

means operatively connected to said switch means for generating a current through said switch means to said telephone corresponding to said current provided by said network,

means operatively connected to said means for displaying a time quantity and said first jack means for receiving said dual tone multifrequency signals, from said telephone when said telephone is disconnected from said network, said signals corresponding to said time quantity and for changing the displayed time quantity based on signals from said telephone, and means responsive to a dialing sequence originating on said telephone and operatively connected to said switch means for connecting said telephone to said network.

25. The apparatus according to claim 24 wherein said time quantity is the time of day.

26. The apparatus according to claim 24 wherein said time quantity is the date.

* * * * *

UNITED STATES PATENT AND TRADEMARK OFFICE

CERTIFICATE OF CORRECTION

PATENT NO. : 5,425,085

DATED : June 13, 1995

INVENTOR(S) : Gerald J. Weinberger, et al.

It is certified that error appears in the above-identified patent and that said Letters Patent is hereby corrected as shown below:

Col. 8, line 29-31, please delete "means operatively connected to said first jack means for disconnecting said first telephone from said network,".

Signed and Sealed this

Seventh Day of November, 1995

Attest:

BRUCE LEHMAN

Attesting Officer

Commissioner of Patents and Trademarks

US005425085B1

(12) REEXAMINATION CERTIFICATE (4452nd)

United States Patent
Weinberger et al.

(10) **Number: US 5,425,085 C1**
(45) **Certificate Issued: Oct. 9, 2001**

(54) **LEAST CONTROL ROUTING DEVICE FOR SEPARATE CONNECTION INTO PHONE LINE**

(75) Inventors: **Gerald J. Weinberger**, Smithtown; **Roger C. Lee**, Wading River, both of NY (US)

(73) Assignee: **Rates Technology Inc.**, Smithtown, NY (US)

Reexamination Request:
No. 90/005,472, Aug. 31, 1999

Reexamination Certificate for:

Patent No.:	**5,425,085**
Issued:	**Jun. 13, 1995**
Appl. No.:	**08/210,670**
Filed:	**Mar. 18, 1994**

Certificate of Correction issued Nov. 7, 1995.

(51) **Int. Cl.**[7] **H04M 15/00**; H04M 7/00
(52) **U.S. Cl.** **379/112**; 379/111; 379/113; 379/114; 379/116; 379/130; 379/131; 379/219; 379/220; 379/221
(58) **Field of Search** 379/111, 112, 379/113, 114, 115, 116, 130, 131, 132, 219, 220, 221

(56) **References Cited**

U.S. PATENT DOCUMENTS

5,161,109		11/1992	Keating et al.	364/464.02
5,212,789		5/1993	Rago	395/600
5,400,395	*	3/1995	Berenato	379/114
5,420,914	*	5/1995	Blumhardt	379/115
5,473,630		12/1995	Penzias et al.	375/114
5,515,425		5/1996	Penzias et al.	379/114
5,799,071		8/1998	Azar et al.	379/113

FOREIGN PATENT DOCUMENTS

0 586 157 A2	3/1994	(EP)	G06F/15/403

OTHER PUBLICATIONS

Communiqué Telecommunications, Inc. (Ontario, California), "Customized Telemiser Selects Low–Cost Routing," *Computerworld*, vol. XVIII, No. 48, Nov. 28, 1983, p. 109 (plus cover page and contents page).

Communiqué Telecommunications, Inc. (Ontario, California), "Least–Cost Router," *Telecommunications*, vol. 18, No. 1, Jan., 1984, p. 92 (plus cover page and contents page).

Communiqué Telecommunications, Inc. (Ontario, California), "How to Make the Least of Your Long Distance Phone Bill," *Communications News*, vol. 21, No. 9, Sep. 1984, p. 171 (plus cover page).

Communiqué Telecommunications, Inc. (Ontario, California), "How to Make the Least of Your Long Distance Phone Bill," *Sports Illustrated*, Oct. 1, 1984, p. 113 (plus cover page).

CALLMISER Trademark File History (Registration No. 1725288; Registration Date Oct. 20, 1992; International Class 9).

* cited by examiner

Primary Examiner—Vijay Shankar

(57) **ABSTRACT**

A device interconnects within the phone line coming from a first phone and routes telephone calls along a least cost route originating from the first telephone to a second telephone via the network. A housing forms an enclosure and has a first jack for interconnection to the phone side of the phone line and a second jack for interconnection to the network side of the phone line. The housing forms an enclosure which includes a switch for disconnecting the first phone from the network. The device generates a source of current through the switch to the first phone corresponding to the amount of current provided by the phone network. A database stores billing rate parameters for determining various communication paths of different carriers based on parameters such as the time and date of the call. Phone calls from the first phone are detected and stored. The database is addressed and a plurality of communication switch paths are identified as well as the cost rate of each path. The cost rates for each identified path are compared to determine a least cost route for the call. The device generates a number sequence corresponding to a desired carrier so that the dialed call is routed through the second jack and phone line to the selected communication path and carrier so as to establish a switched connection between the first and second phones.

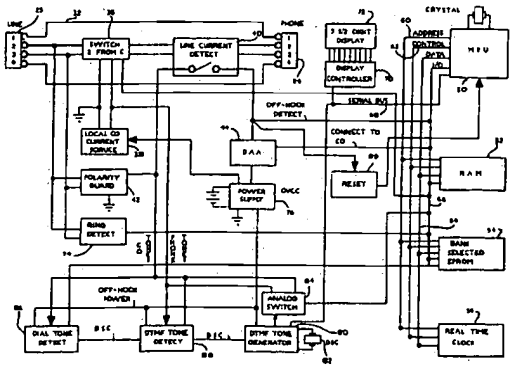

REEXAMINATION CERTIFICATE ISSUED UNDER 35 U.S.C. 307

NO AMENDMENTS HAVE BEEN MADE TO THE PATENT

AS A RESULT OF REEXAMINATION, IT HAS BEEN DETERMINED THAT:

The patentability of claims **1–26** is confirmed.

* * * * *

UNITED STATES PATENT AND TRADEMARK OFFICE

CERTIFICATE OF CORRECTION

PATENT NO. : 5,425,085

DATED : June 13, 1995

INVENTOR(S) : Gerald J. Weinberger, et al.

It is certified that error appears in the above-identified patent and that said Letters Patent is hereby corrected as shown below:

Col. 8, line 29-31, please delete "means operatively connected to said first jack means for disconnecting said first telephone from said network,".

Signed and Sealed this

Seventh Day of November, 1995

Attest:

BRUCE LEHMAN

Attesting Officer

Commissioner of Patents and Trademarks

US005425085B1

(12) REEXAMINATION CERTIFICATE (4452nd)

United States Patent
Weinberger et al.

(10) Number: US 5,425,085 C1
(45) Certificate Issued: Oct. 9, 2001

(54) **LEAST CONTROL ROUTING DEVICE FOR SEPARATE CONNECTION INTO PHONE LINE**

(75) Inventors: **Gerald J. Weinberger**, Smithtown; **Roger C. Lee**, Wading River, both of NY (US)

(73) Assignee: **Rates Technology Inc.**, Smithtown, NY (US)

Reexamination Request:
No. 90/005,472, Aug. 31, 1999

Reexamination Certificate for:

Patent No.:	**5,425,085**
Issued:	**Jun. 13, 1995**
Appl. No.:	**08/210,670**
Filed:	**Mar. 18, 1994**

Certificate of Correction issued Nov. 7, 1995.

(51) **Int. Cl.**[7] **H04M 15/00**; H04M 7/00
(52) **U.S. Cl.** **379/112**; 379/111; 379/113; 379/114; 379/116; 379/130; 379/131; 379/219; 379/220; 379/221
(58) **Field of Search** 379/111, 112, 379/113, 114, 115, 116, 130, 131, 132, 219, 220, 221

(56) **References Cited**

U.S. PATENT DOCUMENTS

5,161,109		11/1992	Keating et al.	364/464.02
5,212,789		5/1993	Rago	395/600
5,400,395	*	3/1995	Berenato	379/114
5,420,914	*	5/1995	Blumhardt	379/115
5,473,630		12/1995	Penzias et al.	375/114
5,515,425		5/1996	Penzias et al.	379/114
5,799,071		8/1998	Azar et al.	379/113

FOREIGN PATENT DOCUMENTS

0 586 157 A2	3/1994	(EP)	G06F/15/403

OTHER PUBLICATIONS

Communiqué Telecommunications, Inc. (Ontario, California), "Customized Telemiser Selects Low–Cost Routing," *Computerworld*, vol. XVIII, No. 48, Nov. 28, 1983, p. 109 (plus cover page and contents page).

Communiqué Telecommunications, Inc. (Ontario, California), "Least–Cost Router," *Telecommunications*, vol. 18, No. 1, Jan., 1984, p. 92 (plus cover page and contents page).

Communiqué Telecommunications, Inc. (Ontario, California), "How to Make the Least of Your Long Distance Phone Bill," *Communications News*, vol. 21, No. 9, Sep. 1984, p. 171 (plus cover page).

Communiqué Telecommunications, Inc. (Ontario, California), "How to Make the Least of Your Long Distance Phone Bill," *Sports Illustrated*, Oct. 1, 1984, p. 113 (plus cover page).

CALLMISER Trademark File History (Registration No. 1725288; Registration Date Oct. 20, 1992; International Class 9).

* cited by examiner

Primary Examiner—Vijay Shankar

(57) **ABSTRACT**

A device interconnects within the phone line coming from a first phone and routes telephone calls along a least cost route originating from the first telephone to a second telephone via the network. A housing forms an enclosure and has a first jack for interconnection to the phone side of the phone line and a second jack for interconnection to the network side of the phone line. The housing forms an enclosure which includes a switch for disconnecting the first phone from the network. The device generates a source of current through the switch to the first phone corresponding to the amount of current provided by the phone network. A database stores billing rate parameters for determining various communication paths of different carriers based on parameters such as the time and date of the call. Phone calls from the first phone are detected and stored. The database is addressed and a plurality of communication switch paths are identified as well as the cost rate of each path. The cost rates for each identified path are compared to determine a least cost route for the call. The device generates a number sequence corresponding to a desired carrier so that the dialed call is routed through the second jack and phone line to the selected communication path and carrier so as to establish a switched connection between the first and second phones.

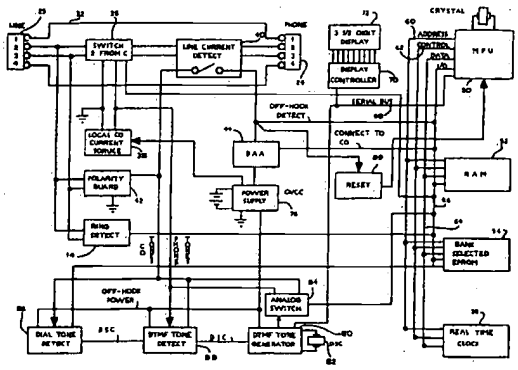

REEXAMINATION CERTIFICATE ISSUED UNDER 35 U.S.C. 307

NO AMENDMENTS HAVE BEEN MADE TO THE PATENT

AS A RESULT OF REEXAMINATION, IT HAS BEEN DETERMINED THAT:

The patentability of claims **1–26** is confirmed.

* * * * *

INFORMATION DISCLOSURE CITATION
For Reexamination

FORM PTO-1449 U.S. DEPARTMENT OF COMMERCE PATENT AND TRADEMARK OFFICE	Docket No. 61749/4	U.S. Patent No. 5,425,085
TITLE: LEAST COST ROUTING DEVICE FOR SEPARATE CONNECTION INTO PHONE LINE	Issued to: Weinberger et al.	
	Issue Date	U.S. Class
CUSTOMER NO.: 32642	June 13, 1995	379/112

U.S. PATENT DOCUMENTS

EXAMINER INITIAL		DOCUMENT NUMBER	DATE	NAME	CLASS	SUBCLASS	FILING DATE OF PATENT
	1	5,173,933	12/22/1992	Jabs et al.	379	58	09/25/1990

FOREIGN PATENTS

EXAMINER INITIAL		DOCUMENT NUMBER	DATE	COUNTRY	INT'L. CLASS		TRANSLATION YES	TRANSLATION NO
	2	2 218 595	11/15/1989	Great Britain	1/27		X	

OTHER DOCUMENTS (Including Author, Title, Date, Pertinent Pages, etc.)

	5	SPX, STARPLUS, VODAVI, General Description Installation and Maintenance Manual, Issue 1, (Sept. 1990)
	6	STRATA, DK8 & DK16, TOSHIBA, Digital Key Telephone System General Description, (March 1993)
	7	ISOETEC® System Technical Manual, (July 1988)

EXAMINER	DATE CONSIDERED

EXAMINER: Initial if reference considered, whether or not citation is in conformation with MPEP609. Draw line through citation if not in conformance and not considered. Include copy of this form with next communication to applicant.

Exhibit B

Civil Action No. 1:07-cv-00442-JJF

UNITED STATES PATENT AND TRADEMARK OFFICE

UNITED STATES DEPARTMENT OF COMMERCE
United States Patent and Trademark Office
Address: COMMISSIONER FOR PATENTS
P.O. Box 1450
Alexandria, Virginia 22313-1450
www.uspto.gov

APPLICATION NO.	FILING DATE	FIRST NAMED INVENTOR	ATTORNEY DOCKET NO.	CONFIRMATION NO.
90/007,939	02/14/2006	5425085	61749/4	9558

7590 05/21/2007

EXAMINER	

Robert L. Epstein ESQ.
EPSTEIN DRANGEL BAZERMAN & JAMES LLP
60 East 42nd St.
Suite 820
New York, NY 10165

ART UNIT	PAPER NUMBER

DATE MAILED: 05/21/2007

Please find below and/or attached an Office communication concerning this application or proceeding.

UNITED STATES PATENT AND TRADEMARK OFFICE

Commissioner for Patents
United States Patent and Trademark Office
P.O. Box 1450
Alexandria, VA 22313-1450
www.uspto.gov

DO NOT USE IN PALM PRINTER

(THIRD PARTY REQUESTER'S CORRESPONDENCE ADDRESS)

Kory D. Christensen
STOEL RIVES LLP
201 South Main St. One Utah Center Suite 1100
Salt Lake City, UT 84111

EX PARTE REEXAMINATION COMMUNICATION TRANSMITTAL FORM

REEXAMINATION CONTROL NO. *90/007,939*.

PATENT NO. *5425085*.

ART UNIT *3992*.

Enclosed is a copy of the latest communication from the United States Patent and Trademark Office in the above identified *ex parte* reexamination proceeding (37 CFR 1.550(f)).

Where this copy is supplied after the reply by requester, 37 CFR 1.535, or the time for filing a reply has passed, no submission on behalf of the *ex parte* reexamination requester will be acknowledged or considered (37 CFR 1.550(g)).

Ex Parte Reexamination Communication	Control No. 90/007,939	Patent Under Reexamination 5425085	
	Examiner Joseph R. Pokrzywa	Art Unit 3992	

A SHORTENED STATUTORY PERIOD FOR RESPONSE TO THIS ACTION IS SET TO EXPIRE 2 MONTH(S) FROM THE MAILING DATE OF THIS LETTER. EXTENSIONS OF TIME ARE GOVERNED BY 37 CFR 1.550(c). If the specified period for response is less than thirty (30) days, a response within the statutory minimum of thirty (30) days will be considered timely.

Joseph R. Pokrzywa
Primary Examiner
Art Unit: 3992

cc: Requester (if third party requester)

Office Action in Ex Parte Reexamination	Control No. 90/007,939	Patent Under Reexamination 5425085	
	Examiner Joseph R. Pokrzywa	Art Unit 3992	

-- The MAILING DATE of this communication appears on the cover sheet with the correspondence address --

a☐ Responsive to the communication(s) filed on _____. b☐ This action is made FINAL.
c☐ A statement under 37 CFR 1.530 has not been received from the patent owner.

A shortened statutory period for response to this action is set to expire 2 month(s) from the mailing date of this letter. Failure to respond within the period for response will result in termination of the proceeding and issuance of an *ex parte* reexamination certificate in accordance with this action. 37 CFR 1.550(d). **EXTENSIONS OF TIME ARE GOVERNED BY 37 CFR 1.550(c).** If the period for response specified above is less than thirty (30) days, a response within the statutory minimum of thirty (30) days will be considered timely.

Part I THE FOLLOWING ATTACHMENT(S) ARE PART OF THIS ACTION:

1. ☐ Notice of References Cited by Examiner, PTO-892.
2. ☒ Information Disclosure Statement, PTO/SB/08.
3. ☐ Interview Summary, PTO-474.
4. ☐ _____.

Part II SUMMARY OF ACTION

1a. ☒ Claims *1-26* are subject to reexamination.
1b. ☐ Claims _____ are not subject to reexamination.
2. ☐ Claims _____ have been canceled in the present reexamination proceeding.
3. ☒ Claims *6 and 17* are patentable and/or confirmed.
4. ☒ Claims *1-5, 7-16 and 18-26* are rejected.
5. ☐ Claims _____ are objected to.
6. ☐ The drawings, filed on _____ are acceptable.
7. ☐ The proposed drawing correction, filed on _____ has been (7a)☐ approved (7b)☐ disapproved.
8. ☐ Acknowledgment is made of the priority claim under 35 U.S.C. § 119(a)-(d) or (f).
   a)☐ All b)☐ Some* c)☐ None of the certified copies have
   1☐ been received.
   2☐ not been received.
   3☐ been filed in Application No. _____.
   4☐ been filed in reexamination Control No. _____.
   5☐ been received by the International Bureau in PCT application No. _____.
   * See the attached detailed Office action for a list of the certified copies not received.
9. ☐ Since the proceeding appears to be in condition for issuance of an *ex parte* reexamination certificate except for formal matters, prosecution as to the merits is closed in accordance with the practice under *Ex parte* Quayle, 1935 C.D. 11, 453 O.G. 213.
10. ☐ Other: _____

Joseph R. Pokrzywa

JOSEPH R. POKRZYWA
PRIMARY EXAMINER

cc: Requester (if third party requester)

DETAILED ACTION

Reexamination

1. **Claims 1-26** of U.S. Patent 5,425,085 (hereafter "the '085 Patent") are subject to reexamination.

2. Upon reviewing the previous reexamination proceeding for the '085 Patent (noted as Reexamination Control No. 90/005,472), declarations under 37 C.F.R. 1.131 were submitted to overcome the prior art rejection of clams 1-26, being cited under 35 U.S.C.103 as being unpatentable over Azar (U.S. Patent No. 5,799,071) in view of Berenato (U.S. Patent No. 5,400,395), both of which were included in the Information Disclosure Statement dated 9/8/06 in the present proceeding, whereby the declarations demonstrated the completion of the subject invention prior to the filing date of both references, with the earlier noted as Azar, being Oct. 5, 1992.

3. With this, it appears that the proposed rejection of the instant claims 1-5, 7-10, and 13 of the '085 Patent by the reference titled "Strata DK8 & DK16: Digital Key Telephone System General Description", published by Toshiba and dated March 1993 (referred to as "Toshiba"), would not be considered as prior art, according to the date of Oct. 5, 1992, referred to in the declarations. Since the '085 Patent was filed on March 18, 1994, a reference published one year before the application for a patent will be a statutory bar under 35 U.S.C. 102(b) and thus cannot be overcome by an affidavit or declaration under 37 CFR 1.131. However, the Toshiba reference

is dated "March 1993", and with no other indication of a specific date present, the date of March 31, 1993 will be utilized as the publication date. With this, the Toshiba reference was not published over one year before the filing of the '085 Patent, and with the above noted declarations, would not be considered as prior art. Thus, the rejection proposed by the Third Party Requester of claims 1-5, 7-10, and 13 over the reference of Toshiba, is not adopted in this action.

Information Disclosure Statement

4. The references listed in the Information Disclosure Statements (IDS) submitted on 6/22/06, 9/8/06, and 9/22/06 have been considered by the examiner, with one exception. The reference of the article from the IDS dated 9/8/06 titled "Discount Long Distance Digest", was not considered, as this article was published after the filing date of the '085 Patent, and is thus not considered as prior art (see attached PTO-SB/08's).

Claim Rejections - 35 USC § 102

5. The following is a quotation of the appropriate paragraphs of 35 U.S.C. 102 that form the basis for the rejections under this section made in this Office action:

> A person shall be entitled to a patent unless –
>
> (b) the invention was patented or described in a printed publication in this or a foreign country or in public use or on sale in this country, more than one year prior to the date of application for patent in the United States.

6. **Claims 1-5, 7-10, and 13** are rejected under 35 U.S.C. 102(b) as being anticipated by "Starplus SPX: General Description Installation and Maintenance Manual", published by Vodavi Communication Systems, dated September 1990 (hereafter "Vodavi").

Regarding ***claim 1***, Vodavi discloses a device for routing telephone calls along a least cost route originating from a first telephone to a second telephone having an associated telephone number via a network having a plurality of alternate communication switch paths corresponding to different carriers which can be chosen to route the call and normally providing a current to said first telephone when said first telephone is in use [see page 200-8; also see page 300-5; also see page 320-13; also see page 500-18], comprising

a housing forming an enclosure and comprising first jack means for connection to said first telephone and second jack means for connection to said network [see pages 400-2 and 500-2, being the "Basic Cabinet"; also see pages 400-5 through 400-11; also see page 500-16],

switch means operatively connected to said first jack means for disconnecting said first telephone from said network [see page 100-1; also see pages 400-5 through 400-11; also see page 500-16],

means operatively connected to said switch means for generating a current through said switch means to the first telephone, corresponding to a current provided by said network [see pages 410-1 through 410-2; also see page 500-16],

database means for storing billing rate parameters for determining a least cost communication path for call corresponding to said telephone number [see page 200-8; also see page 300-5, wherein "In order for the LCR to operate, the LCR feature must be activated in the

system and the routing data must be entered into the database."; also see pages 660-1 through 660-28, for instance page 660-16, wherein "This command allows the user to add route lists for LCR use to the system. There are sixteen route lists in the system. Each route can have four different time period entries. In each time period, eight trunk groups can have different priority numbers and can reference different insert and delete tables."],

means operatively connected to said switch means for detecting and storing said telephone number originating from the first telephone means for addressing said database means for identifying a plurality of communication switch paths to said second telephone and the cost rate of each path [see page 300-5; also see page 400-5; also see pages 660-1 through 660-28],

means for comparing the cost rate of each path so as to determine a least cost route [see page 200-8, wherein "The trunk groups within each route list entry may be ordered so that the most economical group will be the first choice, the second most economical group is the second choice, etc."; also see page 300-5], and

means operatively connected to said switch means and said second jack means for generating a number sequence corresponding to a desired carrier so that said call is routed through said second jack means to the selected communication path and carrier to establish a switched connection between said first telephone and said second telephone phone [see page 200-8; also see page 300-5, wherein "The dialed digits (or modified dialed digits) are outpulsed on the trunk."].

Regarding ***claim 2***, Vodavi discloses the device discussed above in claim 1, and further teaches that said least cost communication path parameters include the time and date of the call [see page 300-5].

Regarding ***claim 3***, Vodavi discloses the device discussed above in claim 1, and further teaches that said switch means connects said first telephone to said network during an incoming call [see page 200-4].

Regarding ***claim 4***, Vodavi discloses the device discussed above in claim 1, and further teaches that an internal power supply connected to said means for generating a current [see Figure 400.1 on page 400-2].

Regarding ***claim 5***, Vodavi discloses the device discussed above in claim 1, and further teaches that said means for generating said number sequence comprises a dual tone multifrequency generator [see page 400-5].

Regarding ***claim 7***, Vodavi discloses the device discussed above in claim 1, and further teaches that said detecting means includes a dual tone multifrequency detector [see page 400-5].

Regarding ***claim 8***, Vodavi discloses the device discussed above in claim 1, and further teaches of means for maintaining the time and date so as to determine the least cost route based on the time and date of the call [see pages 200.11, 230-2, and 300-5].

Regarding ***claim 9***, Vodavi discloses the device discussed above in claim 1, and further teaches that said cost may be given a bias for preference to a given carrier [see page 620-43, being the priority level].

Regarding ***claim 10***, Vodavi discloses the device discussed above in claim 1, and further teaches of means for updating said database means with a current billing rate schedule [see pages 600-1 and 660-1 through 660-28].

Regarding ***claim 13***, Vodavi discloses the device discussed above in claim 10, and further teaches that said update means includes a modem for receiving signals through said telephone line and downloading the update information [see Figure 400.4 on page 400-5, being the "Modem Unit"; also see pages 400-19 and 600-1].

7. **Claims 1-5, 7-10, 13-16, 18, 19, and 22-26** are rejected under 35 U.S.C. 102(b) as being anticipated by the publication "ISOETEC System/228: Technical Manual", published by ISOETEC Communications, Inc. and dated July 1998 (hereafter "Isoetec").

Regarding ***claim 1***, Isoetec discloses a device for routing telephone calls along a least cost route originating from a first telephone to a second telephone having an associated telephone number via a network having a plurality of alternate communication switch paths corresponding to different carriers which can be chosen to route the call and normally providing a current to

said first telephone when said first telephone is in use [see section 1.5 on page 1.18; also see sections 10.1 and 10.2 on pages 10.1-10.3; also see section 10.6 on page 10.4], comprising

a housing forming an enclosure [228 Cabinet with the Main Distribution Frame (MDF) on page 2.7 (Figure 2-1) and page 3.2 (Figure 3-1)] and comprising first jack means for connection to said first telephone and second jack means for connection to said network [see pages 1.2 and 1.5-1.15; also see pages 3.6-3.9; also see sections 3.6-3.9 on pages 3.20-3.23],

switch means operatively connected to said first jack means for disconnecting said first telephone from said network [see pages 1.5-1.15; also see sections 3.6-3.9 on pages 3.20-3.23; also see pages 4.131 and 4.146],

means operatively connected to said switch means for generating a current through said switch means to the first telephone, corresponding to a current provided by said network [see pages 1.5-1.16; also see sections 3.6-3.9 on pages 3.20-3.23],

database means for storing billing rate parameters for determining a least cost communication path for call corresponding to said telephone number [see page 4.102-4.104; also see pages 10.1-10.6, being the customized LCR Database; also see section 15.2],

means operatively connected to said switch means for detecting and storing said telephone number originating from the first telephone means for addressing said database means for identifying a plurality of communication switch paths to said second telephone and the cost rate of each path [see pages 4.102-4.104; also see Figure 10-1 and pages 10.1-10.6, wherein "This information includes number and types of facilities and services used, and the customer's area code and exchange"; also see pages 4.103, 4.104 and 4.220],

means for comparing the cost rate of each path so as to determine a least cost route [see page 10.1; also see pages 4.102 and 4.103], and

means operatively connected to said switch means and said second jack means for generating a number sequence corresponding to a desired carrier so that said call is routed through said second jack means to the selected communication path and carrier to establish a switched connection between said first telephone and said second telephone phone [see pages 10.1-10.9; also see pages 4.102-4.104].

Regarding ***claim 2***, Isoetec discloses the device discussed above in claim 1, and further teaches that said least cost communication path parameters include the time and date of the call [see pages 10.1-10.9; also see pages 4.102-4.112].

Regarding ***claim 3***, Isoetec discloses the device discussed above in claim 1, and further teaches that said switch means connects said first telephone to said network during an incoming call [see page 1.21; also see pages 4.9-4.15].

Regarding ***claim 4***, Isoetec discloses the device discussed above in claim 1, and further teaches that an internal power supply connected to said means for generating a current [see page 1.16].

Regarding ***claim 5***, Isoetec discloses the device discussed above in claim 1, and further teaches that said means for generating said number sequence comprises a dual tone multifrequency generator [see pages 1.2, 1.8, and 1.15].

Regarding ***claim 7***, Isoetec discloses the device discussed above in claim 1, and further teaches that said detecting means includes a dual tone multifrequency detector [see pages 1.2, 1.8, and 1.15].

Regarding ***claim 8***, Isoetec discloses the device discussed above in claim 1, and further teaches of means for maintaining the time and date so as to determine the least cost route based on the time and date of the call [see pages 10.1-10.9; also see pages 4.102-4.112].

Regarding ***claim 9***, Isoetec discloses the device discussed above in claim 1, and further teaches that said cost may be given a bias for preference to a given carrier [see pages 10.1-10.9; also see pages 4.102-4.112].

Regarding ***claim 10***, Isoetec discloses the device discussed above in claim 1, and further teaches of means for updating said database means with a current billing rate schedule [see pages 10.1-10.9; also see pages 4.102-4.112].

Regarding ***claim 13***, Isoetec discloses the device discussed above in claim 10, and further teaches that said update means includes a modem for receiving signals through said telephone line and downloading the update information [see page 1.24; also see pages 23.1 and 23.19].

Regarding ***claim 14***, Isoetec discloses a device for routing telephone calls along a least cost route originating from a first telephone to a second telephone having an associated telephone number via a network having a plurality of alternate communication switch paths corresponding to different carriers which can be chosen to route the call and normally providing a current to said first telephone when said first telephone is in use [see section 1.5 on page 1.18; also see sections 10.1 and 10.2 on pages 10.1-10.3; also see section 10.6 on page 10.4], comprising

a housing forming an enclosure [228 Cabinet with the Main Distribution Frame (MDF) on page 2.7 (Figure 2-1) and page 3.2 (Figure 3-1)] and comprising first jack means for connection to said first telephone, and second jack means for connection to said network [see pages 1.2 and 1.5-1.15; also see pages 3.6-3.9; also see sections 3.6-3.9 on pages 3.20-3.23],

means positioned on said housing for visibly displaying the time and date [see Figure 1-4 on page 1.5; also see page 2.18; also see page 3.1, being the station port that provides digital data to digital display phones; also see Fig. 3-10 on page 3.16, whereby the I/O Panel, positioned on the housing of the cabinet 228, includes a connection to the monitor; also see page 4.181],

switch means operatively connected to said first jack means for disconnecting said first telephone from said network [see pages 1.5-1.15; also see sections 3.6-3.9 on pages 3.20-3.23; also see pages 4.131 and 4.146],

means operatively connected to said first jack means for disconnecting said first telephone from said network [see pages 1.5-1.15; also see sections 3.6-3.9 on pages 3.20-3.23; also see pages 4.131 and 4.146],

means operatively connected to said switch means for generating a current through said switch means to said first telephone corresponding to said current provided by said network [see page 1.18; also see page 2.4],

means operatively connected to said time and date display means and said switch means for receiving a predetermined dial sequence from said first telephone corresponding to a predetermined date and time to be displayed and means for changing the displayed time and date based on the received signals [see pages 4.79-4.81, whereby return times and return dates are programmed based on DTMF signals from the telephone],

database means for storing billing rate parameters for determining a least cost communication path for a call corresponding to said telephone number, based on such factors as the time and date of the call [see page 4.102-4.104; also see pages 10.1-10.6, being the customized LCR Database; also see section 15.2],

means operatively connected to said switch means for detecting and storing said telephone number originating from the first telephone [see pages 4.102-4.104; also see Figure 10-1 and pages 10.1-10.6, wherein "This information includes number and types of facilities and services used, and the customer's area code and exchange"; also see pages 4.103, 4.104 and 4.220],

means for addressing said database means for identifying a plurality of communication switch paths to said second telephone and the cost rate of each path [see pages 10.1-10.9; also see pages 4.102-4.104],

means for comparing the cost rate of each path so as to determine a least cost route [see pages 10.1-10.9; also see pages 4.102-4.104], and

means operatively connected to said switch means and said second jack means for generating a number sequence corresponding to a desired carrier so that said call is routed through said second jack means to the selected communication path and carrier to establish a switched connection between said first telephone and said second telephone [see pages 10.1-10.9; also see pages 4.102-4.104].

Regarding ***claim 15***, Isoetec discloses the device discussed above in claim 14, and further teaches of means positioned on said housing for manually changing the date and time of the display [see Figure 1-4 on page 1.5; also see page 2.18; also see page 3.1, being the station port that provides digital data to digital display phones; also see page 7.14; also see pages 4.79-4.81, wherein return times and return dates are programmed based on DTMF signals received from the telephone].

Regarding ***claim 16***, Isoetec discloses the device discussed above in claim 14, and further teaches that said means for generating said number sequence comprises a dual tone multifrequency generator [see page 1.8, whereby the 228 system includes a "DTMF tone generator" and a "DTMF tone receiver"; also see pages 4.79-4.81].

Regarding ***claim 18***, Isoetec discloses the device discussed above in claim 14, and further teaches that said detecting means includes a dual tone multifrequency detector [see pages 1.2, 1.8, and 1.15].

Regarding ***claim 19***, Isoetec discloses the device discussed above in claim 14, and further teaches of means for updating said database means with a current billing rate schedule [see pages 10.1-10.9; also see pages 4.102-4.112].

Regarding ***claim 22***, Isoetec discloses the device discussed above in claim 19, and further teaches that said update means includes a modem for receiving signals through said telephone line and downloading the update information [see page 1.24; also see pages 23.1 and 23.19].

Regarding ***claim 23***, Isoetec discloses the device discussed above in claim 14, and further teaches that said cost may be given a bias for preference to a given carrier [see pages 10.1-10.9; also see pages 4.102-4.112].

Regarding ***claim 24***, Isoetec discloses an apparatus for displaying a time quantity which can be initiated from a telephone of the type capable of generating dual tone multifrequency signals [see page 1.8, whereby the 228 system includes a "DTMF tone generator" and a "DTMF tone receiver"; also see pages 4.79-4.81, whereby return times and return dates are programmed based on DTMF signals from the telephone] comprising

a housing forming an enclosure [228 Cabinet with the Main Distribution Frame (MDF) on page 2.7 (Figure 2-1) and page 3.2 (Figure 3-1)] and comprising first jack means for interconnection to said telephone [page 3.6], and second jack means for connection to a telephone switching network [see page 2.4; also see pages 3.8 and 3.9],

said network normally providing a current to said telephone when said telephone is in use [see page 1.18; also see page 2.4],

means positioned on said housing for visibly displaying a time quantity [see Figure 1-4 on page 1.5; also see page 2.18; also see page 3.1, being the station port that provides digital data to digital display phones; also see Fig. 3-10 on page 3.16, whereby the I/O Panel, positioned on the housing of the cabinet 228, includes a connection to the monitor; also see page 4.181],

switch means operatively connected to said first jack means for disconnecting said telephone from said network [see page 1.8; also see page 2.4],

means operatively connected to said switch means for generating a current through said switch means to said telephone corresponding to said current provided by said network [see page 1.16; also see page 2.4],

means operatively connected to said means for displaying a time quantity and said first jack means for receiving said dual tone multifrequency signals, from said telephone when said telephone is disconnected from said network [see page 7.14; also see pages 4.79-4.81, wherein return times and return dates are programmed based on DTMF signals received from the telephone],

said signals corresponding to said time quantity and for changing the displayed time quantity based on signals from said telephone [see pages 4.79-4.81, whereby return times and return dates are programmed based on DTMF signals from the telephone], and

means responsive to a dialing sequence originating on said telephone and operatively connected to said switch means for connecting said telephone to said network [see pages 4.122-4.127].

Regarding ***claim 25***, Isoetec discloses the apparatus discussed above in claim 24, and further teaches that said time quantity is the time of day [see pages 4.79-4.81, whereby return times and return dates are programmed based on DTMF signals from the telephone].

Regarding ***claim 26***, Isoetec discloses the apparatus discussed above in claim 24, and further teaches that said time quantity is the date [see pages 4.79-4.81, whereby return times and return dates are programmed based on DTMF signals from the telephone].

8. **Claims 1, 2, 5, 7, and 10** are rejected under 35 U.S.C. 102(b) as being anticipated by the UK Patent Application No. 2,218,595, with the applicant being STC PLC, being published November 15, 1989 (hereafter "STC'595").

Regarding ***claim 1***, STC'595 discloses a device for routing telephone calls along a least cost route originating from a first telephone to a second telephone having an associated telephone

number via a network having a plurality of alternate communication switch paths corresponding to different carriers which can be chosen to route the call and normally providing a current to said first telephone when said first telephone is in use [see page 4, para. 1], comprising

a housing forming an enclosure and comprising first jack means for connection to said first telephone and second jack means for connection to said network [see Fig. 4, para. 1, wherein "It is housed in a standard box", also wherein "The unit has four telephone connector inlets, one of which connects the box to the line, while the others provide three possible telephone extensions"],

switch means operatively connected to said first jack means for disconnecting said first telephone from said network [see abstract; also see page 2, para. 4 through page 3, para. 4, wherein "switching means responsive to the detection by said monitoring means of the commencement of "dialing" therefrom to connect the network access arrangement between the line and the instrument"; also see page 4, para. 2],

means operatively connected to said switch means for generating a current through said switch means to the first telephone, corresponding to a current provided by said network [see page 4, para. 2, wherein "The telephone during the signaling is powered from the external power supply"],

database means for storing billing rate parameters for determining a least cost communication path for call corresponding to said telephone number [see page 5, para. 2, wherein "A look-up table will be stored...which could have a default data base installed"],

means operatively connected to said switch means for detecting and storing said telephone number originating from the first telephone means for addressing said database means

for identifying a plurality of communication switch paths to said second telephone and the cost rate of each path [see abstract; also see page 2, para. 4],

means for comparing the cost rate of each path so as to determine a least cost route [see page 3, para. 4 through page 4, para. 1, wherein "a device which is connected between the BT line and a telephone, and routes calls to the MCL network when it is cheaper to do so."; also see page 6, para. 3], and

means operatively connected to said switch means and said second jack means for generating a number sequence corresponding to a desired carrier so that said call is routed through said second jack means to the selected communication path and carrier to establish a switched connection between said first telephone and said second telephone phone [see page 3, para. 4 through page 4, para. 1, wherein "a device which is connected between the BT line and a telephone, and routes calls to the MCL network when it is cheaper to do so."; also see page 6, para. 3].

Regarding ***claim 2***, STC'595 discloses the device discussed above in claim 1, and further teaches that said least cost communication path parameters include the time and date of the call [see page 4, para. 1].

Regarding ***claim 5***, STC'595 discloses the device discussed above in claim 1, and further teaches that said means for generating said number sequence comprises a dual tone multifrequency generator [see page 4, para. 3 through page 5, para. 7].

Regarding ***claim 7***, STC'595 discloses the device discussed above in claim 1, and further teaches that said detecting means includes a dual tone multifrequency detector [see page 4, para. 3 through page 5, para. 7].

Regarding ***claim 10***, STC'595 discloses the device discussed above in claim 1, and further teaches of means for updating said database means with a current billing rate schedule [see page 5, para. 2].

9. **Claims 1-5, and 7-11** are rejected under 35 U.S.C. 102(b) as being anticipated by Jabs *et al.* (U.S. Patent Number 5,173,933), issued on Dec. 22, 1992 (hereafter "Jabs").

Regarding ***claim 1***, Jabs discloses a device for routing telephone calls along a least cost route originating from a first telephone to a second telephone having an associated telephone number via a network having a plurality of alternate communication switch paths corresponding to different carriers which can be chosen to route the call and normally providing a current to said first telephone when said first telephone is in use [see col. 4, lines 24-55; also see col. 8, lines 17-19], comprising

a housing forming an enclosure and comprising first jack means for connection to said first telephone and second jack means for connection to said network [see col. 6, lines 34-39; also see col. 8, lines 12-17, whereby the interfaces 108 and 112 are the first jack means and interfaces 100 and 104 are the second jack means]

switch means operatively connected to said first jack means for disconnecting said first telephone from said network [col. 8, lines 24-25],

means operatively connected to said switch means for generating a current through said switch means to the first telephone, corresponding to a current provided by said network [see col. 8, lines 24 and 25; also see col. 9, line 64-col. 10, line 3],

database means for storing billing rate parameters for determining a least cost communication path for call corresponding to said telephone number [col. 6, line 26 and col. 22, lines 49-52; also see col. 12, lines 42 and 43],

means operatively connected to said switch means for detecting and storing said telephone number originating from the first telephone means for addressing said database means for identifying a plurality of communication switch paths to said second telephone and the cost rate of each path [col. 10, lines 7-10; also see col. 2, lines 8-15; also see col. 20, lines 53-55; also see col. 11; also see col. 6, lines 25-30],

means for comparing the cost rate of each path so as to determine a least cost route [see col. 11-col. 12, line 10; also see col. 4, lines 24-28], and

means operatively connected to said switch means and said second jack means for generating a number sequence corresponding to a desired carrier so that said call is routed through said second jack means to the selected communication path and carrier to establish a switched connection between said first telephone and said second telephone phone [col. 4, lines 49-59; also see col. 20, lines 53-55].

Regarding ***claim 2***, Jabs discloses the device discussed above in claim 1, and further teaches that said least cost communication path parameters include the time and date of the call [col. 12, lines 4-6; also see col. 6, lines 53 and 54].

Regarding ***claim 3***, Jabs discloses the device discussed above in claim 1, and further teaches that said switch means connects said first telephone to said network during an incoming call [col. 15, lines 19-32].

Regarding ***claim 4***, Jabs discloses the device discussed above in claim 1, and further teaches that an internal power supply connected to said means for generating a current [col. 6, lines 44-47].

Regarding ***claim 5***, Jabs discloses the device discussed above in claim 1, and further teaches that said means for generating said number sequence comprises a dual tone multifrequency generator [col. 10, lines 7-10; also see cols. 19 and 20].

Regarding ***claim 7***, Jabs discloses the device discussed above in claim 1, and further teaches that said detecting means includes a dual tone multifrequency detector [col. 10, lines 7-10; also see col. 20, lines 20-23].

Regarding ***claim 8***, Jabs discloses the device discussed above in claim 1, and further teaches of means for maintaining the time and date so as to determine the least cost route based on the time and date of the call [col. 6, lines 53-57; also see col. 12, lines 4-6].

Regarding ***claim 9***, Jabs discloses the device discussed above in claim 1, and further teaches that said cost may be given a bias for preference to a given carrier [col. 12, lines 12-15].

Regarding ***claim 10***, Jabs discloses the device discussed above in claim 1, and further teaches of means for updating said database means with a current billing rate schedule [col. 6, lines 25-39].

Regarding ***claim 11***, Jabs discloses the device discussed above in claim 10, and further teaches that said update means includes a circuit board mounted inside said enclosure, and said database means comprises a removable chip on said circuit board, and means for accessing said removable chip from outside said housing [col. 6, lines 26-40].

Claim Rejections - 35 USC § 103

10. The following is a quotation of 35 U.S.C. 103(a) which forms the basis for all obviousness rejections set forth in this Office action:

> (a) A patent may not be obtained though the invention is not identically disclosed or described as set forth in section 102 of this title, if the differences between the subject matter sought to be patented and the prior art are such that the subject matter as a whole would have been obvious at the time the invention was made to a person having ordinary skill in the art to which said subject matter pertains. Patentability shall not be negatived by the manner in which the invention was made.

11. **Claim 12** is rejected under 35 U.S.C. 103(a) as being unpatentable over Jabs *et al.* (U.S. Patent Number 5,425,085 (hereafter "Jabs").

Regarding ***claim 12***, Jabs discloses the device discussed above in claim 11, and further teaches that said means for accessing said removable chip includes a removable cover on said housing for accessing said chip [see col. 6, lines 34-40]. Particularly, Jabs teaches in column 6, lines 34-40, that "Where the interface of the present invention is within a housing, the ability to plug or unplug the external memory cartridge 52 allows for easy upgrading of both tariff information and system code without requiring the opening of such housing or any special programming or erasing equipment." With this, Jabs discloses that accessing of the memory cartridge can be performed by opening the housing. While Jabs prefers the design choice of plugging and unplugging the memory cartridge to the housing, one of ordinary skill in the art would have expected that the alternate design of the device having a removable cover on the housing for accessing the chip, would have performed the same purpose, as even recognized by Jabs. Therefore, it would have been obvious to one of ordinary skill in this art to have the device of Jabs include a removable cover on the housing to access a memory cartridge to obtain the invention as specified in claim 12.

12. **Claims 20 and 21** are rejected under 35 U.S.C. 103(a) as being unpatentable over the publication "ISOETEC System/228: Technical Manual", published by ISOETEC Communications, Inc. and dated July 1998 (hereafter "Isoetec") in view of Jabs *et al.* (U.S. Patent Number 5,425,085 (hereafter "Jabs").

Regarding ***claim 20***, Isoetec discloses the device discussed above in claim 19, and further teaches that said update means includes a circuit board mounted inside said enclosure [see pages 1.5-1.15].

However Isoetec fails to expressly disclose that said database means comprises a removable chip on said circuit board, and means for accessing said removable chip from outside said housing.

Jabs discloses a device that includes an update means having a circuit board mounted inside an enclosure, and a database means that comprises a removable chip on said circuit board, and means for accessing said removable chip from outside said housing [see col. 6, lines 22-40].

Isoetec & Jabs are combinable because they are from the same field of endeavor, being telephone systems having a least cost routing function. At the time of the invention, it would have been obvious to a person of ordinary skill in the art to have a removable chip on the circuit board, as taught by Jabs, in the device of Isoetec. The suggestion/motivation for doing so would have been that a removable chip would allow for easy upgrading of least cost routing data, as recognized by Jabs in column 6, lines 2-40. Therefore, it would have been obvious to combine the teachings of Jabs with the system of Isoetec to obtain the invention as specified in claim 20.

Regarding ***claim 21***, Isoetec and Jabs disclose the device discussed above in claim 20, and Jabs further teaches that said means for accessing said removable chip includes a removable cover on said housing for accessing said chip [see col. 6, lines 34-40]. Particularly, Jabs states in column 6, lines 34-40, that "Where the interface of the present invention is within a housing, the ability to plug or unplug the external memory cartridge 52 allows for easy upgrading of both tariff information and system code without requiring the opening of such housing or any special programming or erasing equipment." With this, Jabs discloses that accessing of the memory cartridge can be performed by opening the housing. While Jabs prefers the design choice of plugging and unplugging the memory cartridge to the housing, one of ordinary skill in the art would have expected that the alternate design of the device having a removable cover on the housing for accessing the chip, would have performed the same purpose, as even recognized by Jabs. As discussed above, it would have been obvious to a person of ordinary skill in the art to have a removable chip on the circuit board, as taught by Jabs, in the device of Isoetec. The suggestion/motivation for doing so would have been that a removable chip would allow for easy upgrading of least cost routing data, as recognized by Jabs in column 6, lines 2-40. Thus, it would have been obvious to one of ordinary skill in this art to have the device of Isoetec and Jabs include a removable cover on the housing to access a memory cartridge to obtain the invention as specified in claim 21.

STATEMENT OF REASONS FOR PATENTABILITY AND/OR CONFIRMATION

13. The following is an examiner's statement of reasons for patentability and/or confirmation of the claims found patentable in this reexamination proceeding:

Claims 6 and 17 are confirmed as patentable.

Specifically, regarding ***claims 6 and 17***, in the examiner's opinion, it would not have been obvious to one of ordinary skill in the art, at the time the invention was made, to have the device, as claimed in claims 1 or 14, respectively, further have the housing substantially cylindrical with opposing ends, and with the first jack means positioned on one end and the second jack means positioned on the opposite end. None of the prior art of record teaches of a least cost device with this structure. Further, the examiner can find no motivation based on the prior art of record that would lead one to construct the claimed devices with this shape for the housing. Particularly, the references of Vodavi and Isoetec teach of telephone systems having least cost routing functions, whereby both references disclose cabinets that contain a plurality of boards. A cylindrical structure would not be desirable in a cabinet such as these, and no motivation is known that would lead one to alter the described devices to have a cylindrical structure with the first jack means positioned on one end and the second jack means positioned on the opposite end. Further, the STC'595 reference states on page 4, lines 4-6, that "It is housed in a standard box, which is double the size of an ordinary dual BT telephone socket." There is no motivation to alter a double-sized ordinary dual British Telecom telephone socket into cylindrical structure. Continuing, the Jabs reference discloses an interface between a plurality of telecommunication stations and a plurality of trunks that link to communication carriers of various media, whereby the interface is adapted for use in an oceangoing vessel. However, there

is no indication that one would desire to have this interface in a substantially cylindrical shape, with a jack means on each of the sides. Thus, the limitations found in claims 6 and 17 are patentable over the prior art of record.

Any comments considered necessary by PATENT OWNER regarding the above statement must be submitted promptly to avoid processing delays. Such submission by the patent owner should be labeled: "Comments on Statement of Reasons for Patentability and/or Confirmation" and will be placed in the reexamination file.

Conclusion

14. Extensions of time under 37 CFR 1.136(a) will not be permitted in these proceedings because the provisions of 37 CFR 1.136 apply only to "an applicant" and not to parties in a reexamination proceeding. Additionally, 35 U.S.C. 305 requires that *ex parte* reexamination proceedings "will be conducted with special dispatch" (37 CFR 1.550(a)). Extensions of time in *ex parte* reexamination proceedings are provided for in 37 CFR 1.550(c).

15. In order to ensure full consideration of any amendments, affidavits or declarations, or other documents as evidence of patentability, such documents must be submitted in response to this Office action. Submissions after the next Office action, which is intended to be a final action, will be governed by the requirements of 37 CFR 1.116, after final rejection and 37 CFR 41.33 after appeal, which will be strictly enforced.

16. The patent owner is reminded of the continuing responsibility under 37 CFR 1.565(a) to apprise the Office of any litigation activity, or other prior or concurrent proceeding, involving Patent No. 5,425,085 throughout the course of this reexamination proceeding.

NOTICE RE PATENT OWNER'S CORRESPONDENCE ADDRESS

Effective May 16, 2007, 37 CFR 1.33(c) has been revised to provide that:

The patent owner's correspondence address for all communications in an *ex parte* reexamination or an *inter partes* reexamination is designated as the correspondence address of the patent.

> *Revisions and Technical Corrections Affecting Requirements for Ex Parte and Inter Partes Reexamination*, 72 FR 18892 (April 16, 2007)(Final Rule)

The correspondence address for any pending reexamination proceeding not having the same correspondence address as that of the patent is, by way of this revision to 37 CFR 1.33(c), automatically changed to that of the patent file as of the effective date.

This change is effective for any reexamination proceeding which is pending before the Office as of May 16, 2007, including the present reexamination proceeding, and to any reexamination proceeding which is filed after that date.

Parties are to take this change into account when filing papers, and direct communications accordingly.

In the event the patent owner's correspondence address listed in the papers (record) for the present proceeding is different from the correspondence address of the patent, it is strongly encouraged that the patent owner affirmatively file a Notification of Change of Correspondence Address in the reexamination proceeding and/or the patent (depending on which address patent owner desires), to conform the address of the proceeding with that of the patent and to clarify the record as to which address should be used for correspondence.

Telephone Numbers for reexamination inquiries:

Reexamination and Amendment Practice	(571) 272-7703
Central Reexam Unit (CRU)	(571) 272-7705
Reexamination Facsimile Transmission No.	(571) 273-9900

17. ALL correspondence relating to this ex parte reexamination proceeding should be directed as follows:

Please mail any communications to:

Attn: Mail Stop "Ex Parte Reexam"
Central Reexamination Unit
Commissioner for Patents
P. O. Box 1450
Alexandria VA 22313-1450

Please FAX any communications to:

(571) 273-9900
Central Reexamination Unit

Please hand-deliver any communications to:

Customer Service Window
Attn: Central Reexamination Unit
Randolph Building, Lobby Level
401 Dulany Street
Alexandria, VA 22314

Any inquiry concerning this communication or earlier communications from the Reexamination Legal Advisor or Examiner, or as to the status of this proceeding, should be directed to the Central Reexamination Unit at telephone number (571) 272-7705.

Signed:

Joseph R. Pokrzywa
Central Reexamination Unit 3992
(571) 272-7410

Conferees :

CRU - Art Unit 3992

RQAS

Exhibit C

Civil Action No. 1:07-cv-00442-JJF

66548 U.S. PTO
06/21/07

N/E

IN THE UNITED STATES PATENT AND TRADEMARK OFFICE

----------x

In re Reexamination of U.S. Patent No. 5,425,085

Inventor: Gerald J. Weinberger et al.

Title: LEAST COST ROUTING DEVICE FOR SEPARATE CONNECTION INTO PHONE LINE

June 22, 2006
New York, New York 10165

Reexamination Control No.: 90/007,939

Reexamination Examiner : Joseph R. Pokrzywa

Art Unit: 3992

----------x

1690-110

Attn: Mail Stop Ex Parte Reexam
Control Reexamination Unit
Commissioner for Patents
P.O. Box 1450
Alexandria, Virginia 22313-1450

This communication is in response to the Ex Parte Reexamination Communication mailed May 21, 2007.

STATUS OF THE CLAIMS

1. (pending) A device for routing telephone calls along a least cost route originating from a first telephone to a second telephone having an associated telephone number via a network having a plurality of alternate communication switch paths corresponding to different carriers which can be chosen to route the call and normally providing a current to said first telephone when said first telephone is in use, comprising

a housing forming an enclosure and comprising first jack means for connection to said first telephone and second jack means for connection to said network

switch means operatively connected to said first jack means for disconnecting said first telephone from said network,

means operatively connected to said switch means for generating a current through said switch means to the first telephone, corresponding to a current provided by said network,

database means for storing billing rate parameters for determining a least cost communication path for call corresponding to said telephone number,

means operatively connected to said switch means for detecting and storing said telephone number originating from the first telephone

means for addressing said database means for identifying a plurality of communication switch paths to said second telephone and the cost rate of each path,

means for comparing the cost rate of each path so as to determine a least cost route, and

means operatively connected to said switch means and said second jack means for generating a number sequence corresponding to a desired carrier so that said call is routed through said second jack means to the selected communication path and carrier to establish a switched connection between said first telephone and said second telephone phone.

2. (pending) The device according to claim 1 wherein said least cost communication path parameters include the time and date of the call.

3. (pending) The device according to claim 1 wherein said switch means connects said first telephone to said network during an incoming call.

4. (pending) The device according to claim 1 including an internal power supply

connected to said means for generating a current.

5. (pending) The device according to claim 1 wherein said means for generating said number sequence comprises a dual tone multifrequency generator.

6. (pending) The device according to claim 1 wherein said housing is substantially cylindrical with opposing ends, wherein said first jack means is positioned on one end and said second jack means is positioned on the opposite end.

7. (pending) The device according to claim 1 wherein said detecting means includes a dual tone multifrequency detector.

8. (pending) The device according to claim 1 including means for maintaining the time and date so as to determine the least cost route based on the time and date of the call.

9. (pending) The device according to claim 1 wherein said cost may be given a bias for preference to a given carrier.

10. (pending) The device according to claim 1 including means for updating said database means with a current billing rate schedule.

11. (pending) The device according to claim 10 wherein said update means

includes a circuit board mounted inside said enclosure, and said database means comprises a removable chip on said circuit board, and means for accessing said removable chip from outside said housing.

12. (pending) The device according to claim 11 wherein said means for accessing said removable chip includes a removable cover on said housing for accessing said chip.

13. (pending) The device according to claim 10 wherein said update means includes a modem for receiving signals through said telephone line and downloading the update information.

14. (pending) A device for routing telephone calls along a least cost route originating from a first telephone to a second telephone having an associated telephone number via a network having a plurality of alternate communication switch paths corresponding to different carriers which can be chosen to route the call and normally providing a current to said first telephone when said first telephone is in use, comprising

a housing forming an enclosure and comprising first jack means for connection to said first telephone, and second jack means for connection to said network,

means positioned on said housing for visibly displaying the time and date,

switch means operatively connected to said first jack means for disconnecting said first telephone from said network,

means operatively connected to said switch means for generating a current through said switch means to said first telephone corresponding to said current provided by said network,

means operatively connected to said time and date display means and said switch means for receiving a predetermined dial sequence from said first telephone corresponding to a predetermined date and time to be displayed and

means for changing the displayed time and date based on the received signals,

database means for storing billing rate parameters for determining a least cost communication path for a call corresponding to said telephone number, based on such factors as the time and date of the call,

means operatively connected to said switch means for detecting and storing said telephone number originating from the first telephone,

means for addressing said database means for identifying a plurality of

communication switch paths to said second telephone and the cost rate of each path,

means for comparing the cost rate of each path so as to determine a least cost route, and means operatively connected to said switch means and said second jack means for generating a number sequence corresponding to a desired carrier so that said call is routed through said second jack means to the selected communication path and carrier to establish a switched connection between said first telephone and said second telephone.

15. (pending) The device according to claim 14 including means positioned on said housing for manually changing the date and time of the display.

16. (pending) The device according to claim 14 wherein said means for generating said number sequence comprises a dual tone multifrequency generator.

17. (pending) The device according to claim 14 wherein said housing is substantially cylindrical with opposing ends, wherein said first jack means is positioned on one end and second jack means is positioned on the other end.

18. (pending) The device according to claim 14 wherein said detecting means includes a dual tone multifrequency detector.

19. (pending) The device according to claim 14 including means for updating said database means with a current billing rate schedule.

20. (pending) The device according to claim 19 wherein said update means includes a circuit board mounted inside said enclosure, and said database means comprises a removable chip on said circuit board, and means for accessing said removable chip from outside said housing.

21. (pending) The device according to claim 20 wherein said means for accessing said removable chip includes a removable cover on said housing for accessing said chip.

22. (pending) The device according to claim 19 wherein said update means includes a modem for receiving signals through said telephone line and downloading the update information.

23. (pending) The device according to claim 14 wherein said cost may be given a bias for preference to a given carrier.

24. (pending) An apparatus for displaying a time quantity which can be initiated from a telephone of the type capable of generating dual tone multifrequency signals comprising

a housing forming an enclosure and comprising first jack means for interconnection to said telephone, and second jack means for connection to a telephone switching network, said network normally providing a current to said telephone when said telephone is in use,

means positioned on said housing for visibly displaying a time quantity,

switch means operatively connected to said first jack means for disconnecting said telephone from said network,

means operatively connected to said switch means for generating a current through said switch means to said telephone corresponding to said current provided by said network,

means operatively connected to said means for displaying a time quantity and said first jack means for receiving said dual tone multifrequency signals, from said telephone when said telephone is disconnected from said network, said signals corresponding to said time quantity and for changing the displayed time quantity based on signals from said telephone,

and means responsive to a dialing sequence originating on said telephone and operatively connected to said switch means for connecting said telephone to said network.

25. (pending) The apparatus according to claim 24 wherein said time quantity is the time of day.

26. (pending) The apparatus according to claim 24 wherein said time quantity is the date.

AMENDMENTS TO THE CLAIMS (Marked-up Version)

27 (new) A device for routing telephone calls along a least cost route originating from a first telephone to a second telephone having an associated telephone number via a network having a plurality of alternate communication switch paths corresponding to different carriers which can be chosen to route the call and normally providing a current to said first telephone when said first telephone is in use, comprising

a housing forming an enclosure and comprising first jack means for connection to said first telephone and second jack means for connection to said network,

switch means operatively connected to said first jack means for disconnecting said first telephone from said network during routing of a telephone call from said first telephone,

means operatively connected to said switch means for generating a current through said switch means to the first telephone, corresponding to a current provided by said network, when said first telephone is disconnected from said network by said switch means,

database means for storing billing rate parameters for determining a least cost communication path for call corresponding to said telephone number,

means operatively connected to said switch means for detecting and storing said telephone number originating from the first telephone,

means for addressing said database means for identifying a plurality of communication switch paths to said second telephone and the cost rate of each path,

means for comparing the cost rate of each path so as to determine a least cost route, and

means operatively connected to said switch means and said second jack means for generating a number sequence corresponding to a desired carrier so that said call is routed through said second jack means to the selected communication path and carrier to establish a switched connection between said first telephone and said second telephone phone.

28. (new) A device for routing telephone calls along a least cost route originating from a first telephone to a second telephone having an associated telephone number via a network having a plurality of alternate communication switch paths corresponding to different carriers which can be chosen to route the call and normally providing a current to said first telephone when said first telephone is in use, comprising

a housing forming an enclosure and comprising first jack means for connection to said first telephone, and second jack means for connection to said network, means positioned on said housing for visibly displaying the time and date,

switch means operatively connected to said first jack means for disconnecting said first telephone from said network during routing of a telephone call from said first telephone,

means operatively connected to said switch means for generating a current through said switch means to said first telephone corresponding to said current provided by said network, when said first telephone is disconnected from said network by said switch means,

means operatively connected to said time and date display means and said switch means for receiving a predetermined dial sequence from said first telephone corresponding to a predetermined date and time to be displayed,

means for changing the displayed time and date based on the received signals,

database means for storing billing rate parameters for determining a least cost communication path for a call corresponding to said telephone number, based on

such factors as the time and date of the call,

means operatively connected to said switch means for detecting and storing said telephone number originating from the first telephone,

means for addressing said database means for identifying a plurality of communication switch paths to said second telephone and the cost rate of each path,

means for comparing the cost rate of each path so as to determine a least cost route, and means operatively connected to said switch means and said second jack means for generating a number sequence corresponding to a desired carrier so that said call is routed through said second jack means to the selected communication path and carrier to establish a switched connection between said first telephone and said second telephone.

29. (new) An apparatus for displaying a time quantity which can be initiated from a telephone of the type capable of generating dual tone multifrequency signals comprising

a housing forming an enclosure and comprising first jack means for interconnection to said telephone, and second jack means for connection to a telephone switching network, said network normally providing a current to said

telephone when said telephone is in use, means positioned on said housing for visibly displaying a time quantity,

switch means operatively connected to said first jack means for disconnecting said telephone from said network,

means operatively connected to said switch means for generating a current through said switch means to said telephone corresponding to said current provided by said network, when said telephone is disconnected from said network by said switch means,

means operatively connected to said means for displaying a time quantity and said first jack means for receiving said dual tone multifrequency signals, from said telephone when said telephone is disconnected from said network, said signals corresponding to said time quantity and for changing the displayed time quantity based on signals from said telephone, and means responsive to a dialing sequence originating on said telephone and operatively connected to said switch means for connecting said telephone to said network.

AMENDMENTS TO THE CLAIMS (Clean Version)

27 (new) A device for routing telephone calls along a least cost route originating from a first telephone to a second telephone having an associated telephone number via a network having a plurality of alternate communication switch paths corresponding to different carriers which can be chosen to route the call and normally providing a current to said first telephone when said first telephone is in use, comprising

a housing forming an enclosure and comprising first jack means for connection to said first telephone and second jack means for connection to said network,

switch means operatively connected to said first jack means for disconnecting said first telephone from said network during routing of a telephone call from said first telephone,

means operatively connected to said switch means for generating a current through said switch means to the first telephone, corresponding to a current provided by said network, when said first telephone is disconnected from said network by said switch means,

database means for storing billing rate parameters for determining a least cost communication path for call corresponding to said telephone number,

means operatively connected to said switch means for detecting and storing said telephone number originating from the first telephone,

means for addressing said database means for identifying a plurality of communication switch paths to said second telephone and the cost rate of each path,

means for comparing the cost rate of each path so as to determine a least cost route, and

means operatively connected to said switch means and said second jack means for generating a number sequence corresponding to a desired carrier so that said call is routed through said second jack means to the selected communication path and carrier to establish a switched connection between said first telephone and said second telephone phone.

28. (new) A device for routing telephone calls along a least cost route originating from a first telephone to a second telephone having an associated telephone number via a network having a plurality of alternate communication switch paths corresponding to different carriers which can be chosen to route the call and

normally providing a current to said first telephone when said first telephone is in use, comprising

a housing forming an enclosure and comprising first jack means for connection to said first telephone, and second jack means for connection to said network, means positioned on said housing for visibly displaying the time and date,

switch means operatively connected to said first jack means for disconnecting said first telephone from said network during routing of a telephone call from said first telephone,

means operatively connected to said switch means for generating a current through said switch means to said first telephone corresponding to said current provided by said network, when said first telephone is disconnected from said network by said switch means,

means operatively connected to said time and date display means and said switch means for receiving a predetermined dial sequence from said first telephone corresponding to a predetermined date and time to be displayed,

means for changing the displayed time and date based on the received signals,

database means for storing billing rate parameters for determining a least cost

such factors as the time and date of the call,

means operatively connected to said switch means for detecting and storing said telephone number originating from the first telephone,

means for addressing said database means for identifying a plurality of communication switch paths to said second telephone and the cost rate of each path,

means for comparing the cost rate of each path so as to determine a least cost route, and means operatively connected to said switch means and said second jack means for generating a number sequence corresponding to a desired carrier so that said call is routed through said second jack means to the selected communication path and carrier to establish a switched connection between said first telephone and said second telephone.

29. (new) An apparatus for displaying a time quantity which can be initiated from a telephone of the type capable of generating dual tone multifrequency signals comprising

a housing forming an enclosure and comprising first jack means for interconnection to said telephone, and second jack means for connection to a telephone switching network, said network normally providing a current to said

telephone when said telephone is in use, means positioned on said housing for visibly displaying a time quantity,

switch means operatively connected to said first jack means for disconnecting said telephone from said network,

means operatively connected to said switch means for generating a current through said switch means to said telephone corresponding to said current provided by said network, when said telephone is disconnected from said network by said switch means,

means operatively connected to said means for displaying a time quantity and said first jack means for receiving said dual tone multifrequency signals, from said telephone when said telephone is disconnected from said network, said signals corresponding to said time quantity and for changing the displayed time quantity based on signals from said telephone, and means responsive to a dialing sequence originating on said telephone and operatively connected to said switch means for connecting said telephone to said network.

REMARKS

The patented invention relates to a device for routing telephone calls along a least cost route between a first telephone, where the call originates by the caller dialing the digits of the telephone number of the called telephone, and a second telephone where the call is received. The routing takes place through a network. The network includes a plurality of alternate communication paths along which the call can be routed.

Those communication paths, in the context of the public switched telephone network as it existed at the time the invention was made, included hundreds of local and long-distance telephone service carriers in the United States alone. AT&T, MCI and Sprint are probably the most well known of the hundreds of competing carriers.

Those carriers offer different rates for telephone calls depending, for example, on the time of day, the day of week, and the destination. Other factors may also influence the cost of calls.

A caller can choose which company he or she wants to carry the call by dialing a prefix or access code (such as 10-288 for AT&T or 10-624 for MCI) before dialing the destination telephone number. However, because the rates change so often, and because there are so many carriers, it is difficult for the caller to determine which carrier is offering the best rates for the call that the caller wishes to make. In addition, the public utility commissions of the various states, and the federal government, set tariffs on call rates. Moreover, the tariffs and call rates change frequently.

With so many factors influencing the cost of calls, the patented device is of great benefit because it includes a database of the current call rates and a means for automatically determining which carrier offers the best rate for a particular call.

The telephone network comprises a group of telephones (located in residences or businesses, for example) connected to a central office where the connections between calling telephone and called telephones are made. Each telephone is connected to a central office by a pair of wires known as the "local loop". One wire of the local loop is called the "tip", and the other wire of the pair is called the "ring".

The central office contains the switching equipment that connects calls from one caller to another. The central office also contains a power source that powers the network, signaling equipment, and other equipment for supervising the progress of calls. Each central office is connected to other central offices and to the switching facilities of intermediate and long-distance networks.

A telephone has two basic states. In the idle state, the receiver (also known as the handset) is resting in the cradle ("switchhook") of the telephone. This state is known as the "on-hook" state. Although the circuit between the central office and the transmission and signaling circuitry of the telephone is open in the on-hook state, the central office is always electrically connected to the telephone's ringer circuitry.

Lifting the handset off the cradle activates the telephone by completing the circuit between the telephone and the central office, allowing current provided by the central office to flow through the local loop. This active state is known as "off-hook" state. The current provided by the central office to the telephone has two components: a DC

(constant) current for powering the telephone, and an AC current for signaling and transmission.

The central office senses that current is flowing through the local loop and thus knows that the telephone is in operation. The central office then sends a dial tone to the telephone to let the caller know that the central office is ready to accept a telephone number (the "address"). The caller then dials the number, and the central office switch attempts to connect the caller to the called telephone. If the called telephone is in use (already off-hook), the central office returns a busy signal to the originating telephone. Otherwise, the central office returns a ringing signal. (Dial tones, busy signals, rings, and like signals are known as "call-progress" signals.) When the user of the called telephone picks up the handset, a communication link is established. When either telephone is hung up (returned to the on-hook condition), the local telephone company switch associated with that telephone senses the transition and initiates action that returns both telephone lines to their idle states.

Thus, telephones have two functions: signaling and transmission. Signaling is further divided into "supervision" and "addressing." Supervision signals are those that let the central office know the state of the telephone and enable the telephone to seize a line for making a call (i.e., to connect into the central office switching equipment). Addressing signals are those for providing the telephone number of the destination telephone to the network. Older rotary telephone signal an address by means of pulse dialing, which interrupts the steady DC current in the local loop. Modern touch tone telephones signal by means of a combination of audio tones known as "DTMF" (dual tone multifrequency). The transmission function is simply the sending of speech or data

communication path to the called telephone (which is achieved through signaling), enabling a conversation or data exchange (transmission).

The patented invention is a device that is designed to be interposed between the originating telephone and the network. It intercepts the digits dialed by the originating telephone, ascertains the cost of the possible routes for the call based on the dialed digits, compares the cost to select a route, provides the necessary access code to the dialed digits to tell the central office how to route the call (which carrier to select) and then sends to the access code and dialed digits to the network.

The device accomplishes those tasks through the use route selection circuits which detect and store the digits as they are dialed, address a memory having billing information for possible routes based on the dialed digits to obtain the cost of each route through which the dialed call can be sent, compare the costs to select a route, and provide the appropriate access code for insertion into the dialed number to reflect the chosen route.

However, during the time that the route selection is taking place, it is necessary to prevent the digits that are dialed at the originating telephone from being sent to the network central office. In other words, the signaling function of the originating telephone is disabled during the period of time that route selection is taking place in the patented device. That function is performed by "switch means" and a current generator which is connected to that switch means. Those elements are required in all of the claims in the patent under reexamination.

The "switch means" consists of one or more switches for controlling a circuit so that one state or position permits signaling between the originating telephone and the

network and a second state or position disables signaling between the originating telephone and the network. In other words, the switch means is a mechanism for isolating the telephone addressing signals (i.e., the number dialed) from the telephone network.

The embodiment of the switch means element in the specification includes the "2 Form C" switch arrangement shown in Fig. 2 (block 36) of the patent. A "2 Form C" switch is also known in electrical engineering as a "double-pole, double-throw" switch. There are many configurations of switches--whether Form A, B, or C switches, shunting mechanisms, relays, or other mechanical or solid state devices--that could be easily substituted for the 2 Form C switch to accomplish the same function (disconnecting the originating telephone form the network), to get the same result (isolation of the originating telephone from the network during the period when the call is being routed).

The means connected to the switch means for generating a current through the switch means, corresponding to a current provided by the network, is local circuitry or equivalents that, when put in connection with the originating telephone by operation of the switch means, provides power to excite or operate the telephone that substitutes for the power that would otherwise be provided by the network.

One embodiment of this means for generating a current is disclosed in the specification as the "local CO current source 38" at col. 3, lines 54-56, and in Fig. 2, block 38. According to Fig. 2, this circuitry draws power from the telephone network and converts it to a current capable of energizing the telephone. There are many configurations of circuitry that would be capable of performing this current generating function. Such circuitry could include current regulators, voltage regulators, voltage

regulators configured as current regulators, and any other circuitry capable of providing power to energize the originating telephone.

Aside form the above, it should be noted that the circuit for detecting and storing the dialed number is required by the claims to be connected to the switch means. That circuitry detects the tones associated with the telephone number entered by the caller (the user of the originating telephone) and places data corresponding to that dialed telephone number into memory or a storage device. Such circuitry could include, but is not limited to, the DTMF tone detector described in the specification (Fig. 2, block 88; col. 2, lines 24-27). There are a variety of common and readily available integrated circuits with DTMF detection capabilities that typically include registers or other circuitry capable of storing one or more digits of the telephone.

Further, the claims require a means for generating a number sequence (such as the access code) corresponding to a desired carrier to route the call. That means is required to be connected to the switch means and to the jack (second jack means) that connects the device to the network.

In the patent, that means is disclosed as a signal generator (such as a DTMF tone generator or equivalent circuitry), which, among other functions, generates the tone signals corresponding to the numerical prefix of the selected carrier. Those tone signals are then sent through the second jack means (i.e., the connection between the device and the network) out to the network and the telephone company's central office, which recognizes the signals as the destination for the call and makes the appropriate connections through the central office switches to allow for communication between the first and second telephones.

connections through the central office switches to allow for communication between the first and second telephones.

Thus, all of the claims of the patent require:

"switch means operatively connected to said first jack means for disconnecting said first telephone from said network, " and

"means operatively connected to said switch means for generating a current through said switch means to the first telephone, corresponding to a current provided by said network,".

In addition, claims 1 through 23 each require:

"means operatively connected to said switch means for detecting and storing said telephone number originating from the first telephone" and

"means operatively connected to said switch means and said second jack means for generating a number sequence corresponding to a desired carrier so that said call is routed through said second jack means to the selected communication path and carrier to establish a switched connection between said first telephone and said second telephone phone."

Further, the patented call routing device requires: (a) a database that stores billing rate parameters for determining a least cost route; (b) a circuit for addressing the database based on the dialed digits stored by the detecting and storing means to identify a plurality of routes and the cost rate for each of those routes; and (c) a circuit for comparing the cost rate of each route so as to determine a least cost route.

In order to anticipate any of the patent claims 1 - 23, a reference must include both: (a) the "switch means" that operates and is connected as specified in the claims; and (b) the routing circuitry (database means, addressing means and cost rate comparison means) as set forth in the claims. Neither the Vodavi, Isoetec, STC '595 nor the Jabs et al. references teaches both of those aspects of the patented invention.

Regarding claims 24 – 26, Isoetec does not teach the "switch means" or current generating means connected to the switch means for generating current through the switch means, and hence does not anticipate claims 24 - 26.

Claims 1-5, 7-10 and 13 have been rejected under 35 USC 102(b) as anticipated Vodavi (Starplus SPX Telephone System Manual).

Vodavi does not anticipate claim 1 of the patent, or claims 2-5, 7-10 and 13 dependant thereon, because it does not teach the "switch means." Those claims require: (a) switch means for disconnecting the telephone from the network; (b) means connected to the switch means for generating a current through the switch means to the telephone; (c) means connected to the switch means for detecting and storing the telephone member; and (d) means connected to the switch means for generating the number sequence corresponding to the desired carrier.

With regard to the "switch means", the Examiner points to pages 100-1, 400-5 though 400-11 and 500-16 of Vodavi. Clearly, the Vodavi system (as does any telephone system) includes many switches (for example, the Normal/Service switch referred to in those pages) that provide a variety of functions. However, none of the switches disclosed in the Vodavi reference are comparable to the claimed "switch means" nor are they connected to other components in the system in the claimed manner.

Further, the Examiner has not pointed out a single switch or combination of switches disclosed in Vodavi that could be considered to meet the claim limitations directed to the switch means or the claim limitations reciting the manner in which the switch means is connected.

The only switch that is specifically disclosed in the pages noted by the Examiner is part of the Power Failure Transfer Circuit which is shown in the schematic of Figure 500.7 on page 500-16. The function of the Power Failure Transfer Circuit is described on page 500-12.

That circuit normally connects the telephones to the Vodavi system and not to the trunks of the network. In the event of a power failure, the switch in the circuit changes state and connects the telephones directly to the trunks of the network, thereby bypassing the (then powerless) Vodavi system so the telephones are powered by the network and can be used in an emergency.

The switch in the Vodavi Power Failure Transfer Circuit is not at all comparable to the claimed "switch means" because it simply functions as an emergency bypass. It does not act to disable the signaling function of the telephone during route selection by

disconnecting the telephone from the network. It operates to connect the telephones to the network in the event of a power failure.

The current generator of the Vodavi system is not connected to the Power Failure Transfer Circuit switch so as to power the telephones and disable the signaling function during route selection. Nor is current provided to the telephones through the Power Failure Transfer Circuit switch. The dialed telephone number detecting and storing means of the Vodavi system is not connected to the Power Failure Transfer Circuit switch. The number sequence generator of the system is not connected to the Power Failure Transfer Circuit switch.

Moreover, the Vodavi system does not include the routing circuitry required by claim 1 of the patent.

The Vodavi system includes an automatic route selection feature that selects a trunk group for a call based upon a pre-determined preference hierarchy that is stored in a memory. For example, a call placed to Boston from a Vodavi system located in New York could be routed along one of a number of different groups of trunk lines, for example, Trunk Group A, Trunk Group B or Trunk Group C. The memory contains a list including each of the truck groups and the trunk group's ranking in the hierarchy, according to desirability. For example: Trunk Group A (least economical) ranked third; Trunk Group B (most economical) ranked first; Trunk Group C (second most economical) ranked second.

In response to the call dialed to Boston, the memory is addressed to determine, for the particular time of day and day of week, the first ranked trunk group (Trunk Group B). The system then determines if any of the lines of Trunk Group B is available to send the

call. If so, Trunk Group B is selected and the call is routed to Boston using one of the lines of that that trunk group.

If none of the lines of Trunk Group B are available, for example, due to high traffic at that time, the next ranked trunk group (Trunk Group C) is selected and if a line in that group is available, it will be used to route the call. Each trunk group is thus selected in turn in accordance with its pre-determined ranking in the stored hierarchy.

In the patented invention, the database memory does not contain a pre-determined route preference hierarchy. Instead, it contains the actual billing parameters associated with each possible route. Subsequent to the detection of the dialed number, the database is accessed and the cost rate of the call for each possible route is obtained based upon the stored billing parameters. The cost for sending the call via each route is downloaded from the database to a circuit which compares the cost rate for each route and selects a route on that basis.

Thus, in the patented invention, billing parameters for the possible routes and not pre-determined route preference rankings are stored in the database. The preferred route is selected through a cost comparison that takes place only after the number is dialed, not on the basis of a pre-determined route preference hierarchy.

The Vodavi system route selection is described in the last paragraph of the first column of pages 300-5 which confirms that, from within the route list entry selected, the first choice trunk group is searched for an available trunk line. If none are available, the other trunk groups in the route list (if allowed) are searched. Trunks are accessed based on the pre-determined order programmed in the memory, not based upon a cost comparison made during route selection.

Page 200-8 of Vodavi describes in more detail the criteria used in the software to select routes. It should be noted that cost, that is, the amount of money associated with each route, is not one of the criteria listed and thus no comparison of the costs for the possible routes is made.

Based upon the above, it is clear that Vodavi does not anticipate claims 1-5, 7-10 and 13 of the patent.

Claims 1-5, 7-10, 13-16, 18, 19, 20-26 are rejected under 35 USC 102(b) as being anticipated by Isoetec. However, Isoetec also lacks the "switch means" required by independent claims 1, 14 and 24, and thus claims 2-5, 7-10, 13, 15-16, 18, 20-23, 25, 26 dependent thereon.

Regarding the "switch means" as recited in claims 1 and 14, the Examiner refers to pages 1.5 to 1-15, 3.6-3.9 on pages 3.20-3.23, page 4.131 and 4.146 of the Isoetec reference. Pages 1.5 to 1.15 relate to the port cards that make up the Isoetec system. Those port cards probably contain various conventional switches. However, there is no teaching that any are comparable to the "switch means" recited in the patent claims.

Sections 3.6-3.9 on pages 3.20-3.23 do not disclose any switch comparable to the claimed "switch means" either. Section 3.6 relates to an off premise extension interface (OPXI) to which a telephone can be connected. The OPXI, according to Section 3.7, can be used to connect that telephone to a trunk for use in a power failure. This is similar to the above mentioned Power Failure Transfer Circuit of Vodavi and does not meet the claim requirement for "switch means" for exactly the same reasons as Vodavi.

Specifically, the Isoetec Power Failure Transfer circuit is not comparable to the claimed "switch means" because it simply functions as an emergency bypass. It does not

include a switch that disables the signaling function of the telephone during route selection by disconnecting the telephone from the network. The current generator of the Isoetec system is not connected to a switch in the Power Failure Transfer circuit. Nor is current provided to the telephone from the Isoetec system through a switch in the Power Failure Transfer circuit. The dialed telephone number detecting and storing means of the Isoetec system is not connected to a switch in the Power Failure Transfer circuit. The number sequence generator of the Isoetec system is not connected to a switch in the Power Failure Transfer circuit.

Section 3.8 relates to the relay and sensor interface. Section 3.9 relates to the digital data interface. Neither of those interfaces includes the claimed "switch means."

Page 4.131 relates to the release key. That key is used instead of the switch-hook on a telephone station to answer and disconnect calls. It is not connected between the telephone and the network. It does not function to disable the signaling function during route selection by disconnecting the telephone from the network. The current generator of the Isoetec system is not connected through that switch to the telephone.

Page 4.146 relates to the split key which allows the user to place and receive multiple calls at the same time. It in no way relates to the claimed "switch means."

Regarding claim 24, the Examiner refers to page 1.8 and page 2.4 of the Isoetec reference with respect to the "switch means." Page 1.8 discusses the voice control module which includes the circuitry for voice switching and conference connections as well as system tones, system timing and station status control. The claimed "switch means" does not involve voice switching. Page 2.4 discusses the site requirements for the Isoetec system and discloses nothing comparable to the "switch means."

Regarding the portion of claim 24 requiring the current generator to be connected to and generate current through the switch means, the examiner refers to pages 1.16 and 2.4. Page 1.16 discusses the two power supplies. The primary power supply provides system voltages to the common control cards and the first 9 port cards. The second power supply provides power for extra port cards. There is no teaching that either power supply is connected to or provides current through any switch comparable to the claimed "switch means." As noted above, page 2.4 discusses the site requirements for the Isoetec system and discloses nothing comparable to the "switch means."

Accordingly, Isoetec does not anticipate claim 24 or claims 25 and 26 dependant thereon.

Claims 1, 2, 5, 7 and 10 are rejected under 35 USC 102(b) as being anticipated by STC '595.

As mentioned above, one of the features of the patented device is that route section is accomplished by obtaining billing parameters for each possible route from a database and comparing the cost rate for each route to determine the least cost route. That is accomplished by three circuits: the database that stores billing rate parameters for the possible routes; the address circuit for addressing the database to obtain the cost rate for each route and the comparison circuit for comparing the cost rates to select a route.

Claim 1 contains the following limitations in that regard:

> database means for storing billing rata parameters for determining at least cost communication path for call corresponding to said telephone number,
>
> means for addressing said database means for identifying a plurality of communication switch paths to said second telephone and the cost rate of each path,

means for comparing the cost rate of each path so as to determine a least cost route.

The Examiner is correct that STC '595 relates to a device that selects British Telecom (BT) to route all calls unless it is cheaper to route the calls via another carrier, Mercury Communications Limited (MCL). However, the STC '595 device does not make its route determination based upon a comparison of cost rates for each of the carriers obtained from a database containing billing parameters for BT and MCL. Nor does the device have circuits that can meet the above limitations of claim 1.

The STC '595 device cannot meet the limitations of claim 1 because:

(a) There is no database in which billing parameters for calls routed via by BT and by MCL are stored;

(b) There is no means for addressing the database to obtain the cost rate of BT and of MCL for the dialed call; and

(c) There is no means of comparing the cost rate of the call for BT and for MCL to select the least cost route.

As described beginning at the last full paragraph of page 5 of the reference, when a call to be routed is made, the digits are dialed. The dialed digits are detected and stored. If the processor determines from the digits that the call is a local call, the digits are simply redialed and the call is routed via BT.

However, if the first four digits are determined by the device to indicate a Mercury routed number (a call that would be cheaper if routed via MCL than BT) the MCL access code (131) is first dialed automatically and placed in front of the dialed digits to route the call via MCL.

Accordingly, the STC '595 device has no means for selecting a route based upon a comparison of stored cost rates of the call for each carrier. In STC '595, route selection is based only on the digits dialed.

The Examiner points to the look-up table described in the second paragraph of page 5 of the reference as constituting the claimed database means. However, that paragraph does not indicate what information is stored in the look-up table. It merely says that the data from the table is passed in DTMF tones, and involves the user calling a remote database number.

The paragraph at the top of page 6 indicates that the dialed digits are stored and examined by the processor 1. If the processor determines that the call is a local call, it causes the number to be redialed so the call is sent via BT. The second full paragraph of page 6 says that the call is sent via MCL if the device determines from the first four digits of the dialed number that the call should be routed via MCL or under processor control that the call would be cheaper if sent by MCL. Although the processor is connected to EEPROM 7 that contains the look-up table, the reference does not specify what data is stored in the look-up table, how the table is addressed or what is done with the data retrieved from the look-up table, other than it is converted into DTMF tones.

Accordingly, there is no teaching in this reference that supports the view that the look-up table contains billing parameters for a call routed by each carrier. In fact, it appears that since the data stored in the look-up table is "passed in DTMF tones" the look-up table contains all combinations of the first four digits of a dialed number for calls that would be cheaper if sent via MCL and when any of those digit combinations is

detected, the access code for MCL calls is automatically generated in DTMF tones to route the call via MCL.

In any case, it is clear that any teaching of means for comparing stored cost rates for sending the call by BT and by MCL is entirely lacking in this reference. Although the examiner points to page 3, paragraph 4 through page 4, paragraph 1 in that regard, there is no mention there or any where in this reference of any circuit that compares stored cost rates for BT and MCL to select a least cost route.

Accordingly, the STC '595 reference does not anticipate claim 1, or claims 2, 5, 7, and 10 dependant thereon.

Claims 1-5 and 7-11 are rejected as anticipated by Jabs et al. However, Jabs lacks both the "switch means" and the routing circuitry required by claim 1.

Jabs et al. relates to a system for routing calls from an ocean going vessel. It involves an interface between mobile communications stations on the vessel and land trunks that link with communication carriers or various communication media, such as satellite communications, cellular lines, and land lines.

Regarding the "switch means" the Examiner points to column 8, lines 24-25 of the reference. However, that section merely says that ports 100, 104, 108 and 122 have "tip" and "ring" wire connections, as is standard for all telephone circuits. It does not disclose anything comparable to the claimed 'switch means." The is no circuitry in the interface of Jabs et al. connected to a jack that connects the interface and a call originating telephone or that functions to disconnect the call originating telephone from a network to disable its signaling function.

Further, there is no teaching in this reference that indicates that the call originating telephone is disconnected from the trunk channels leading to the various carriers during route selection. It would appear that such a function would not be necessary because the call originating telephone is not connected by the interface to any trunk channel until the route (and hence, the trunk channel) is selected.

Claim 1 also requires current generating means that: (a) is connected to the switch means; and (b) generates a current through the switch means to the call originating telephone that corresponds to the current provided by the network. Jabs et al. does not teach such a circuit or anything comparable.

In that regard, the Examiner refers again to column 8, lines 24-25 and to column 9, line 64 – column 10, line 3. However, as mentioned above, column 8, lines 24-25 does not disclose the "switch means."

Column 9, line 64 – column 10, line 3 discusses the telecommunications station tone decoder and states that the decoder scans each of the station channels to detect the presence of loop current, which is a dial tone, indicating that a subscriber is seeking an out-going connection. There is no indication that current generated by the interface is ever supplied to any station, much less through a "switch means" as is required by the claim. In addition, the telecommunications stations referred to are shipboard telephones, facsimile machines, modems or PBX's, all of which are powered by electrical generators on the ship, or when the ship is in port, land based power systems. Thus, none of those stations are powered by current from a telephone network. Since those stations are not powered by a network, there is no need for "switch means" that disables the signaling function by disconnecting the stations from the network during the call routing operation

or provides locally generated current to the stations when they are disconnected from the network.

Regarding the route selection circuitry, Jabs et al. teaches automatic route selection using a pre-determined routing hierarchy, similar to that taught by Vodavi. It does not compare stored cost rates for the various communication carriers or media to determine the least cost route. As a consequence, Jabs et al. does not disclose a database for storing billing parameters for the various communications carriers or media, addressing circuitry to obtain the cost rates for each of the communications carriers or media or circuitry for comparing the cost rates to determine a least cost route.

As set forth in Jabs et al., at column 4, starting at line 24:

> The interface has a programmable routing feature such that it automatically provides the route from one of the station channels to the available trunk channel linked to the communication carrier having the medium of least cost. The communication medium of least cost is determined by selecting the appropriate medium according to a hierarchy. If the ship is docked and there is a line plugged in and available, the interface will route a telephone call originating from a station channel to the trunk channel connected to the land line. If the trunk channel connected to the land line is not available, the interface looks for a trunk channel connected to a cellular line and, if available, routes the telephone call accordingly. If neither land line nor cellular line is available, the interface will route the call to a plurality of carriers via satellite communications. The interface then selects the CES of least cost based upon the ocean area in which the vessel is sailing, the destination of the call, the time of day, and any preferential rates extended to the shipping line.

The Coast Earth Station (CES) of least cost is selected based upon the published service charge and additional charges for each CES. Both standard and off-peak rates are used. Those rates are used to create a preference hierarchy table. The reference makes it

clear that: "The tables are structured such that the least expensive CES resides at the top of the table and progressively more expensive coast earth stations towards the bottom." See column 12, line 44-46.

As set forth in detail in the following sections from Jabs et al., to select a CES, either the standard or off-peak table is consulted, based upon the time of the call. The CES at the top of the chart (predetermined to be the least cost) will be selected to route the call if that CES is available. If not, the next CES on the list is selected and availability determined. That process continues until an available CES is located and the call is sent.

The reference, beginning at the first full paragraph of column 11, describes in detail how the route is selected:

> The determination of the least cost service is now described. The interface of the present invention accomplishes least cost routing in two different steps. The interface first selects the least expensive communication medium that is available in the geographic area in which the ocean going vessel is located. If it is determined that satellite is the only communications medium available, the interface then selects the least expensive CES to provide international telephone gateway service to the country designated by the caller.
>
> In order to select the least cost communication medium, the interface must be programmed during installation to recognize the available media and their respective connection to the communication channels, for example, port 1; satellite; port 2; cellular; port 3; land line; port 4; no connection. The setting of the trunk channels to reflect the type of communication terminal connected thereto is depicted below in FIGS. 16A and 16B and described in the text below that references these figures. The hierarchy of selection between the media is defaulted such that land lines are selected as a first choice, cellular lines as a second

> choice, and satellite communications third. The sequencing of the trunk channels to reflect this hierarchy is depicted in FIGS. 15A and 15B below and described in the text that references these figures below. The hierarchy can be changed during installation to reflect duplicate systems or additional communication media. The interface, upon placement of a call, selects the channel of least cost (first choice) off hook, and look for loop current and/or dial tone. If loop current is not detected, the interface on hooks this channel and try either another channel of the same media (as there could be two or more cellular or land lines) if available, or bring the channel off hook for the second choice. The interface continues this process until the channels that are of less cost than satellite are exhausted. If the interface then selects satellite, the interface selects the least expensive coast earth station. If no channels are available due to equipment malfunction or medium cover is not present, the interface passes reorder tone back to the subscriber.

As is further explained at column 11, line 62 with regard to the selection of the CES:

> If the medium selected is via satellite, the interface interprets the country code selected by the caller in the dialing sequence and look through the search tables to select the least expensive CES to route the call. The interface performs this routing by knowing its location (as programmed during installation and updated upon relocation of the vessel according of FIG. 11, below) and also knowing the available coast earth stations providing coverage in the region that the ocean going vessel is located. The interface also takes the time of day into consideration as certain coast earth stations have "off-peak" rates at varying times. The interface scans its search tables and selects the coast earth station having the least cost into the geographic zone which contains the selected country. If the selected CES is busy or not available the next least expensive CES is selected and this will alternate back and forth if for some reason they are both at maximum capacity (busied out). An override

> feature is provided to allow a caller to override least cost routing and select a preferred CES choice should they require that option.

Thus, the reference teaches that the interface will scan its search tables and select the coast earth station having the least cost into the geographic zone which contains the selected country. How the search tables are used to select the coast earth station (CES) to route the call is explained in detail starting at the first full paragraph of Column 12:

> In order to further explain the search tables, the Intmarsat satellite network is used as an example. The Inmarsat satellite network is divided up into three regions: Atlantic Ocean Region (AOR), Pacific Ocean Region (POR), and Indian Ocean Region (IOR). The AOR will be divided into the AOR East and AOR West in the fall of 1990, thereby making four ocean regions. Each of these ocean regions is defined by and serviced by a single geosynchronous satellite. Each ocean region has several coast earth stations that provide gateway services for telephone and telex communications into the international dial up network. The rates charged by these coast earth stations vary both in CES service fees as well as additional "tail end" long distance charges.
>
> In order to arrive at the tariff calculations; the world is divided into a plurality of geographic zones, similar to charge bans used by most international telephone providers. Additionally, the countries having a coast earth station are assigned a band in themselves as in most cases this was the least cost access via satellite into that country. Each zone contains the international 1, 2, or 3 digit code assigned to a country as its calling "country code," for the countries grouped in that geographic zone. A rate is calculated, dependent on a coast earth stations published service charge and the additional tail end charges, for each CES to call into the various geographic zones. A plurality of tables is constructed to encompass both standard and off-peak rates. The tables are structured

> such that the least expensive CES resides at the top of the table and progressively more expensive coast earth stations towards the bottom. The calculations are done using a standard international currency, for example "Gold Franc," which is the industry standard for maritime communication charges in most instances.

Thus, first the available communications carrier or media is selected based upon a predetermined hierarchy or ranking of communications carriers or media stored in a memory. Only if the selected medium is satellite, is further processing required to select the CES. However, as set forth above, even the CES selection is based upon a pre-determined hierarchy in a look-up table.

Consequently, Jabs et al. does not teach: (a) any database storing billing rata parameters for possible communications carriers or media, or for possible CES, for a call corresponding to the dialed telephone number; (b) any means for addressing a database for identifying a plurality of communication switch paths to the called telephone and the cost rate of each path; or (c) any circuitry for comparing the cost rate of each path so as to determine a least cost route.

In Jabs et al., the memory does not store "billing rate parameters" but instead a pre-determined hierarchy (ranking) of possible communications carriers or media and (for use when satellite is the selected communications media) a pre-determined hierarchy (ranking) of each CES. Thus, there is no necessity for comparing the cost rates of the possible routes. Each hierarchy is prepared prior to loading the memory.

Accordingly, Jabs et al. does not anticipate claim 1 or claims 2 - 5 and 7 - 11 dependent thereon.

Claim 12 is rejected under 35 USC 103(a) as unpatentable over Jabs et al. However, claim 12 is not unpatentable over Jabs et al. for the same reasons, set forth in detail above, that Jabs et al. does not anticipate claim 1, from which claim 12 depends.

Claims 20 and 21 are rejected under 35 USC 103(a) as unpatentable over Isoetec and Jabs et al. However, claims 20 and 21 are not unpatentable over Isoetec and Jabs et al., either individually or in combination, because neither of those references teach "switch means" for disconnecting the call originating telephone from the network during call routing or the current generating means for providing current to the telephone through the switch means when the originating telephone is disconnected from the network by the switch means. Further, those references disclose very different systems with very different objectives. Finally, there is no teaching or suggestion in either reference to provide the motivation for one skilled in the art to make the proposed combination.

In addition, the declarations of Roger C. Lee and Gerald Weinberger, the co-inventors of the device claimed in US Patent No. 5,425,085, are presented herewith under 37 CFR 1.131 to "swear back" of both Isoetec and Jabs et al. Those declarations establish a date of invention prior to July, 1988. The Isoetec reference is dated July 1988. Jabs et al. was filed on September 25, 1990, over two years after the invention date. The declarations clearly establish that the patented invention was conceived and reduced to practice prior to the publication of Isoetec and prior to the filing date of Jabs et al. and hence neither of those references can be used under 35 USC 103(a) to render the patent claims unpatentable. In fact, those declarations establish an invention date that predates the effective date of each of the references cited.

Further, new claims 27, 28 and 29 are presented herewith. Those claims correspond to claims 1, 14 and 24, respectively, but include to additional requirements.

In claims 27 and 28, the switch means is now required to disconnect the originating telephone from the network "during routing of a telephone call from said first telephone."

In claims 27, 28 and 29, the means for generating a current through the switch means to the originating telephone, corresponding to a current provided by the network, is now required to be operative "when said (first) telephone is disconnected from said network by said switch means."

None of the references cited, whether considered individually or in combination, can meet either of those newly added limitations.

The additional limitations are supported in the patent disclosure by Figure 2 and by the specification, beginning on line 16 of column 5. The drawing and text indicate that when the telephone connected to jack 24 is on hook, switch 36 connects jack 24 to the network through jack 25 such that the telephone can receive incoming calls from the network and the network can detect when the telephone goes off hook.

When the telephone goes off hook, indicating that a call to be routed is going to be made from the telephone, that condition is sensed by the device and switch 36 is caused to change state. The change of state of switch 36 disconnects jack 24 from jack 25, and thus the telephone from the network, during routing of the call. At the same time, switch 36 connects jack 24 to local current source 38 which provides current to the telephone through switch 36 and jack 24, when the telephone is disconnected from the network by switch 36.

An updated list of the litigations in which the US Patent No. 5,425,085 has been involved since August, 2006, and the status of each of the litigations, is provided herewith.

Respectfully submitted,

Robert L. Epstein, Reg. No. 26451
EPSTEIN DRANGEL
BAZERMAN & JAMES, LLP
Attorneys for Patent Owner
60 East 42nd Street, Suite 820
New York, New York 10165
Tel. No.: (212) 292-5390
Fax. No.: (212) 292-5391

Enc. (Declarations and List)

Exhibit D

Civil Action No. 1:07-cv-00442-JJF

UNITED STATES PATENT AND TRADEMARK OFFICE

Commissioner for Patents
United States Patent and Trademark Office
P.O. Box 1450
Alexandria, VA 22313-1450
www.uspto.gov

Ex Parte Reexamination Filing Data - March 31, 2006

1. Total requests filed since start of ex parte reexam on 07/01/81 7991

   a. By patent owner 3283 41%
   b. By other member of public 4543 57%
   c. By order of Commissioner 165 2%

2. Number of filings by discipline

   a. Chemical Operation 2476 31%
   b. Electrical Operation 2561 32%
   c. Mechanical Operation 2954 37%

3. Annual Ex Parte Reexam Filings

Fiscal Yr.	No.	Fiscal Yr.	No.	Fiscal Yr.	No.	Fiscal Yr.	No.
1981	78 (3 mos.)	1989	243	1997	376	2005	524
1982	187	1990	297	1998	350	2006	248
1983	186	1991	307	1999	385		
1984	189	1992	392	2000	318		
1985	230	1993	359	2001	296		
1986	232	1994	379	2002	272		
1987	240	1995	392	2003	392		
1988	268	1996	418	2004	441		

4. Number known to be in litigation..... 1858 23%

5. Determinations on requests 7772

   a. No. granted ..... 7088 ..... 91%

      (1) By examiner 6982
      (2) By Director (on petition) 106

   b. No. denied ..... 684 ..... 9%

      (1) By examiner 649
      (2) Order vacated 35

6. Total examiner denials (includes denials reversed by Director) 755

a. Patent owner requester	428	57%
b. Third party requester	327	43%

7. Overall reexamination pendency (Filing date to certificate issue date)

a. Average pendency	22.6 (mos.)
b. Median pendency	17.5 (mos.)

8. Reexam certificate claim analysis:

	Owner Requester	3rd Party Requester	Comm'r Initiated	Overall
a. All claims confirmed	23%	29%	13%	26%
b. All claims cancelled	7%	12%	19%	10%
c. Claims changes	70%	59%	68%	64%

9. Total ex parte reexamination certificates issued (1981 - present) 5316

a. Certificates with all claims confirmed	1385	26%
b. Certificates with all claims canceled	543	10%
c. Certificates with claims changes	3388	64%

10. Reexam claim analysis - requester is patent owner or 3rd party; or Comm'r initiated.

a. Certificates _ PATENT OWNER REQUESTER 2317

(1) All claims confirmed	538	23%
(2) All claims canceled	168	7%
(3) Claim changes	1611	70%

b. Certificates _ 3rd PARTY REQUESTER 2864

(1) All claims confirmed	830	29%
(2) All claims canceled	345	12%
(3) Claim changes	1689	59%

c. Certificates _ COMM'R INITIATED REEXAM 135

(1) All claims confirmed	17	13%
(2) All claims canceled	26	19%
(3) Claim changes	92	68%

Exhibit E

Civil Action No. 1:07-cv-00442-JJF

FILED
CLERK, U.S. DISTRICT COURT
NOV 10 2004
CENTRAL DISTRICT OF CALIFORNIA
BY DEPUTY

DOCKETED ON CM
NOV 10 2004
BY 048

Priority ✓
Send ✓
Enter
Closed
JS-5/JS-6
JS-2/JS-3
Scan Only

UNITED STATES DISTRICT COURT

CENTRAL DISTRICT OF CALIFORNIA

WESTERN DIVISION

ALCATEL INTERNETWORKING, INC.,

Plaintiff,

v.

RATES TECHNOLOGY INC., et al.,

Defendants.

No. CV 03-9449-ER (PLAx)

ORDER GRANTING IN PART PLAINTIFF'S MOTION TO COMPEL RESPONSES TO DISCOVERY REQUESTS

In this action, plaintiff, Alcatel Internetworking, Inc. ("plaintiff") has sued defendants for declaratory relief concerning two patents whose rights are owned by defendants. Defendants filed a motion to dismiss for lack of personal jurisdiction. The District Court reserved its ruling on the motion and permitted discovery limited to the issue of the Court's personal jurisdiction over defendants. Plaintiff then served interrogatories and requests for production of documents on defendants. Defendants' responses to that discovery, or their alleged lack of responses thereto, forms the basis of this Motion.

The Court has considered the documents filed in connection with the Motion, and has concluded that oral argument will not be of material assistance in determining plaintiff's Motion. Accordingly, the hearing scheduled for November 16, 2004, is **ordered off calendar** (see Local Rule 7-15).

161

Defendants have objected to providing the sought-after discovery for a number of reasons. First, they indicate that the discovery was directed not to Rates Technology Inc. ("RTI"), but instead to the named defendants "Rates Technology, Inc., a New York Corporation," and "Rates Technology New York, Inc., also a New York Corporation." Joint Stipulation at 4. The patents at issue, however, are not owned by either of these named defendants, but are instead owned by Rates Technology Inc., a Delaware corporation. As such, defendants contend that further responses are not required. The Court rejects defendants' argument. RTI has already served initial responses to the discovery requests; its actions indicate its involvement as a defendant in this action. Should RTI file a motion to dismiss the claims against it on the grounds it has not been named as a defendant, and if the District Court determines that the wrong defendant has been named in this action, RTI may be relieved of its discovery obligations at that time. No such ruling has occurred to date. In the meantime, plaintiff, on October, 20, 2004, filed a Notice of Dismissal of the action as to Rates Technology New York, Inc., and has filed a Notice of Errata changing the complaint's allegation that Rates Technology Inc. is a New York Corporation to it being incorporated under the laws of Delaware.

Defendants further assert that plaintiff's description in its discovery requests of RTI's agreements with California companies as "licenses" is incorrect, as the agreements are actually covenants not to sue amounting to settlement agreements between RTI and other allegedly infringing companies. Defendants contend that it would be "improper" under Federal Rule of Evidence 408 for it to produce information about its settlement agreements with other parties and other lawsuits. That rule prohibits use of settlement agreements to prove liability for or invalidity of a claim. It does not preclude use of this evidence when "offered for another purpose." Here, the purpose for which it would be offered is to show RTI's contacts with California, not liability for a claim. Even if such agreements could properly be precluded from being introduced at trial, that is not the issue in this discovery motion. That RTI has entered into multiple licenses, or covenants not to sue, or settlement agreements, with California companies may be determinative on the issue of contacts. While defendants recite their mantra that plaintiff's receipt of "warning letters from and negotiations . . . with [defendants] cannot, without more, support personal jurisdiction

in an action for a declaratory judgment of patent invalidity and noninfringement" (Inamed Corporation v. Kuzmak, 249 F.3d 1356, 1361 (Fed. Cir. 2001)), the discovery sought here may lead to the "more" information without which plaintiffs may not be able to establish whether the Court has personal jurisdiction over defendants.

Next, defendants assert that plaintiff did not complete the Local Rule 37 meet and confer requirements, and that the Joint Stipulation was sent to defendants before defense counsel could give his proposals on how to resolve the discovery dispute. While the Court expects compliance by the parties with the Local Rules, it notes that defendants have not detailed their proposals in the Joint Stipulation or any subsequent filing. Accordingly, the Court will consider and rule on the Motion.

Finally, the Court notes that the District Court's order granting time for discovery did not limit that discovery to an exploration of defendants' contacts with California relating to the two patents at issue herein. Rather, in the Motion to Dismiss, the question will be whether defendants have "certain minimum contacts with [California] such that the maintenance of the suit does not offend traditional notions of fair play and substantial justice." International Shoe Co. v. State of Washington, 326 U.S. 310, 316, 66 S.Ct. 154, 90 L.Ed. 95 (1945). Plaintiff may be able to establish personal jurisdiction over defendants if it can show either: 1. that defendants have contacts with California that are "substantial . . . continuous and systematic," in which case personal jurisdiction may exist over defendants for a cause of action unrelated to those contacts (Perkins v. Benguet Consolidated Mining Co., 342 U.S. 437, 446-47, 72 S.Ct. 413, 96 L.Ed. 485 (1952)); or 2. if defendants' contacts with California are not substantial, those contacts may still subject defendants to specific jurisdiction for claims arising from or related to its activities within the state. Burger King Corp. v. Rudzewicz, 471 U.S. 462, 472, 486, 105 S.Ct. 2174, 85 L.Ed.2d 528 (1985); see Doe v. American National Red Cross, 112 F.3d 1048, 1051 (9th Cir. 1997) (specific jurisdiction requires, in part, that claim arose out of or is the result of defendants' forum-related activities); see also Red Wing Shoe Co. v. Hockersen-Halberstadt, Inc., 148 F.3d 1355, 1359 (Fed. Cir. 1998) (distinguishing between general and specific jurisdiction). Based on the

discovery requested by plaintiff, defendants' responses will not be limited to the two patents at issue herein.[1] With this context in mind, the Court rules as follows:

Interrogatory No. 1: **Granted in part**. Defendants have already provided the names of the entities that may or actually do business in California with which it has entered into settlement agreements entitled "covenants not to sue" relating to the patents at issue herein or other patents. Defendants shall provide the telephone numbers and addresses for each of these entities.

Request for Production No. 1: **Granted in part**, but limited to documents concerning communications between defendants and any licensee (as defined in plaintiff's discovery requests) of the patents that may be or is actually doing business in California (the "California companies"), and limited to the time frame of January 1, 2001, to the present.

Request for Production No. 4: **Granted in part**, but limited to those portions of personal calendars, diaries and planners that defendants' officers or employees have used at any time since January 1, 2001, that reflect conference calls and/or meetings with the California companies, and/or trips to California.

Request for Production No. 5: **Granted in part**, but limited to telephone and cell phone records since January 1, 2001, that reflect calls to California.

Request for Production No. 7: **Granted in part**, but limited to those documents concerning litigation involving the subject patents with the California companies.

---

[1] Defendants assert in their Supplemental Memorandum in Opposition to Plaintiff's Motion that defendant Weinberger's appeal of the denial of his anti-SLAPP motion stays this action as a matter of law. Supplemental Memorandum at 2, citing Elsea v. Saberi, 4 Cal.App.4th 625, 629 (Cal.App. 1 Dist. 1992). As a discovery order of this nature will not render defendant Weinberger's appeal "futile," and will not "affect" the appealed judgment, this Court is not prevented from proceeding. Elsea, 4 Cal.App.4th at 629. This is especially true since the motion being appealed was brought by defendant Weinberger, and this discovery order is directed to defendant RTI.

Request for Production No. 8: **Granted in part**, but limited to those portions of transcripts that reflect contacts that defendants' officers or employees have had with any of the California companies.

SCANNED

Request for Production No. 12: **Granted in part**, but limited to advertisement, promotional and/or marketing materials that were created or used since January 1, 2001, and that either reflect business conducted by defendants in California, or were contained in any publications that were distributed in California.

Request for Production No. 13: **Granted in part**, but limited to responsive documents from January 1, 2001, to the present, and limited to the California companies. Defendants may redact the amount of any payments made or received.

Request for Production No. 14: **Denied**. To the extent defendants contend that they have already produced all documents in their possession responsive to this request, unless plaintiff convinces the Court that this assertion is not made in good faith and/or that defendants did not make a reasonably diligent effort to locate responsive documents, defendants' assertion will be accepted by the Court, and defendants will be considered to have satisfied this request.

Requests for Production Nos. 16-28: **Granted**. Defendants may redact any confidential portions of the "covenants not to sue" -- e.g., the amount of payments made by the third party to defendants, and any terms of these agreements that do not reflect defendants' further business involvement with those third parties -- before producing these documents. To the extent defendants contend that plaintiff is already in possession of covenants not to sue from certain of the California companies, this does not relieve defendants of their obligation to produce responsive documents that are in their possession.

/

/

CONCLUSION

Based on the foregoing, it is **ordered** that plaintiff's Motion to Compel is **granted in part**, as set forth above. No later than 10 business days from the filing date of this Order, defendants shall produce the ordered documents and responses.

DATED: November 10, 2004

PAUL L. ABRAMS
UNITED STATES MAGISTRATE JUDGE

I HEREBY CERTIFY THAT THIS DOCUMENT WAS SERVED BY FAX DELIVERY ON PLAINTIFF/DEFENDANT (OR PARTIES) AT THEIR RESPECTIVE MOST RECENT FAX NUMBER OF RECORD IN THIS ACTION ON THIS DATE.

DATE: 12/6/04

DEPUTY CLERK

FILED
CLERK, U.S. DISTRICT COURT
DEC - 6 2004
CENTRAL DISTRICT OF CALIFORNIA
BY DEPUTY

Priority ___
Send ___
Enter ___
Closed ___
JS-5/JS-6 ___
JS-2/JS-3 ___
Scan Only ✓

DOCKETED ON CM
DEC - 7 2004
BY 051

UNITED STATES DISTRICT COURT

CENTRAL DISTRICT OF CALIFORNIA

WESTERN DIVISION

ALCATEL INTERNETWORKING, INC.,

Plaintiff,

v.

RATES TECHNOLOGY INC., et al.,

Defendants.

No. CV 03-9449-ER (PLAx)

ORDER GRANTING PLAINTIFF'S EX PARTE APPLICATION FOR AN ORDER COMPELLING COMPLIANCE WITH PREVIOUS COURT ORDER

In this action, plaintiff, Alcatel Internetworking, Inc. ("plaintiff") has sued defendants for declaratory relief concerning two patents whose rights are owned by defendants. Defendants filed a motion to dismiss for lack of personal jurisdiction. The District Court reserved its ruling on the motion and permitted discovery limited to the issue of the Court's personal jurisdiction over defendants. Plaintiff then served interrogatories and requests for production of documents on defendants. Based on what it perceived to be insufficient responses by defendants to that discovery, plaintiff moved to compel additional responses. On November 10, 2004, the Court granted in part plaintiff's motion to compel further responses. In particular, the Court granted plaintiff's requests that defendants produce various "covenants not to sue" entered into between defendants and third parties, but allowed defendants to redact any confidential portions of those documents, such as the amounts of payments made by the third parties to defendants under the

82

terms of the covenants, and any terms of those agreements that do not reflect defendants' further business involvement with those third parties.

On December 1, 2004, plaintiff filed an ex parte application for an order compelling compliance with the Court's November 10, 2004, Order, and for sanctions (the "Application"). In the Application, plaintiff contends that defendants have produced none of the covenants, as defendants assert that there are no further responsive documents once the confidential information is redacted, i.e., defendants consider every portion of the covenants to be confidential. See Declaration of Brian K. Brookey in Support of Ex Parte Application ("Brookey Dec."), ¶¶ 3-4; Exs. 3-4. Defendants, in their Opposition to the Application, expressly state that after the payment terms and terms that do not reflect defendants' further business involvement with those third parties were redacted, "there was nothing left to produce." Opposition, at p. 3; Declaration of James B. Hicks, ¶ 4. Defendants further explain that they interpreted the Order to allow them to similarly redact the responses to Request No. 1.

The Court has considered the documents filed in connection with the Application, and finds that defendants' refusal to produce the documents ordered in connection with plaintiff's Requests for Production Nos. 1 and 16-28 is not consistent with the intent of the Court's November 10, 2004, Order. Although the examples provided of terms that may be redacted from the covenants not to sue may have been inartfully worded by the Court, the purpose of the Order was to allow plaintiff to "show RTI's contacts with California," and the covenants not to sue "may be determinative on the issue of contacts." Order, p. 2. The complete redacting by defendants is thwarting plaintiff's ability to fully explore the issue of defendants' contacts with California and thus the Court's personal jurisdiction over defendants. The Court has reviewed various covenants not to sue submitted in connection with plaintiff's previous Motion to Compel (Declaration of Brian K. Brookey in Support of Motion to Compel Responses, Exs. 4-7), and finds that while a technical reading of the Order may have led defendants to believe that there are no terms in the covenants reflecting further business involvement between defendants and the third parties, there is in fact information contained in the covenants that the Court did not intend to be redacted, i.e., the vast majority of the sections, excluding the "Payment" section. Additionally, despite the Court's

instruction that defendants are **not** relieved of their obligation to produce responsive documents based on their contention that plaintiff is already in possession of those documents, defendants may have relied on such possession to refuse production. See RTI's Supplemental Responses, at p. 18 (Ex. 3 to Brookey Dec.). But see Declaration of James B. Hicks, at ¶ 5. Accordingly, and based on the Court's inherent power to vacate and reconsider its own orders (see Motorola, Inc. v. J.B. Rodgers Mechanical Contractors, Inc., 215 F.R.D. 581, 582 (D. Az. 2003)), the Court hereby **orders** defendants to respond to plaintiff's Requests for Production Nos. 1 and 16-28, redacting **only** the amount of payments made or to be made by the third parties to defendants. Such production may be made pursuant to the Stipulated Protective Order entered by the Court on November 5, 2004.

The Court finds that defendants' response to the November 10, 2004, Order, which precipitated the filing of the Application, was not a willful violation of that Order and thus, under the circumstances, declines to award sanctions against defendants or their counsel at this time.

CONCLUSION

Based on the foregoing, it is **ordered** that plaintiff's Application is **granted** as set forth above. No later than December 9, 2004, defendants shall produce the ordered documents to plaintiff, at the offices of plaintiff's counsel.[1]

DATED: December 6, 2004

PAUL L. ABRAMS
UNITED STATES MAGISTRATE JUDGE

[1] In defendants' Supplemental Opposition to the Application, defendants indicate that default was recently entered against plaintiff and its corporate parent in defendant RTI's patent infringement action in New York, that default judgment in that action would be binding upon and res judicata as to plaintiff in this action, and that defendants intend to ask the District Court to stay this action on December 6, 2004. Should the District Court stay this action, then this Order would of course be stayed as well.

FILED
CLERK, U.S. DISTRICT COURT
DEC 17 2004
CENTRAL DISTRICT OF CALIFORNIA
BY DEPUTY

___ Priority
_✓_ Send
___ Clsd
___ Enter
___ JS-5/JS-6
___ JS-2/JS-3

UNITED STATES DISTRICT COURT

CENTRAL DISTRICT OF CALIFORNIA

ALCATEL INTERNETWORKING INC.,

Plaintiff,

v.

RATES TECHNOLOGY, INC., et al.,

Defendants.

Case No. CV 03-9449 ER

ORDER

Once again, Rates Technology Inc. (RTI) has filed objections pursuant to Federal Rule of Civil Procedure 76(a) to a Magistrate Judge's order. This time RTI objects to an order, dated December 6, 2004, compelling compliance with a previous court order, to which the Court previously overruled objections. Once again, finding the December 6, 2004 order to be neither clearly erroneous nor contrary to law, the Court declines to modify or set aside the order. The objections are overruled and the order remains in full effect.

//

//

//

DOCKETED ON CM
DEC 20 2004
BY 006

93

IT IS SO ORDERED.

IT IS FURTHER ORDERED that the Clerk of the Court shall serve, by United States mail or by telefax or by email, copies of this Order on counsel in this matter.

Dated: 12/17/04

EDWARD RAFEEDIE
Senior United States District Judge

FILED
CLERK, U.S. DISTRICT COURT
MAR - 8 2006
CENTRAL DISTRICT OF CALIFORNIA
BY DEPUTY

Priority ✓
Send ✓
Enter ___
Closed ___
JS-5/JS-6 ___
JS-2/JS-3 ___
Scan Only ___

UNITED STATES DISTRICT COURT

CENTRAL DISTRICT OF CALIFORNIA

WESTERN DIVISION

ALCATEL INTERNETWORKING, INC.,

Plaintiff,

v.

RATES TECHNOLOGY INC., et al.,

Defendants.

and consolidated action.

No. CV 03-9449-ER (PLAx) ✓
No. CV 05-6459-ER (PLAx)
(Consolidated actions)

ORDER RE PLAINTIFF'S MOTION TO COMPEL RTI TO RESPOND TO INTERROGATORIES AND REQUESTS FOR PRODUCTION

In this consolidated action, plaintiff Alcatel Internetworking, Inc. ("All") sued defendants Rates Technology Inc. ("RTI") and Gerald Weinberger (collectively the "defendants") for a declaration of non-infringement and invalidity of patents, and defendants sued All, Alcatel USA, Inc. (collectively the "Alcatel parties") and Alcatel, S.A.[1] for patent infringement. In this motion, All moves to compel supplemental responses to its interrogatories and requests for production of documents from RTI. The Court has concluded that oral argument will not be of material assistance in determining All's Motion. Accordingly, the hearing scheduled for March 14, 2006, is **ordered off calendar** (see Local Rule 7-15).

[1] Alcatel, S.A. has since been dismissed for lack of jurisdiction.

DOCKETED ON CM
MAR - 8 2006
BY 048
276

For its part, RTI asserts that this motion is premature as it "has already agreed to exchange supplemental discovery responses with All" (Joint Stipulation, p. 5), and it had sought a mutual exchange date based on a purported agreement to conduct such an exchange. RTI also asserts that it "has been willing and able to provide supplemental responses" to All that are not privileged[2] or relate to settlement, and will do so "as soon as this Court sets a date for exchange." Joint Stipulation, pp. 6, 7.

RTI acknowledges that All has now provided supplemental responses to its discovery requests, but contends that those responses "are defective as a matter of law." Supplemental Memorandum in Opposition, p. 2. In particular, RTI complains that the several boxes of documents produced by All were not produced as they are kept in the usual course of business, and are not organized to correspond to the individual requests, all in violation of Fed.R.Civ.P. 34(b). It further asserts that All's supplemental interrogatory responses are defective, as All has not identified the responsive documents that it has produced.[3]

Whether or not All's discovery responses are adequate is not the subject of a motion currently before this Court.[4] Nowhere does RTI indicate that it has provided the supplemental responses as sought by All in this motion, only that it is able to provide the responses but wanted to produce them simultaneously with All's responses. However, RTI's request to enforce an agreement for simultaneous production was denied by the Court on February 27, 2006. The Court is thus left to decide All's motion.

---

[2] All indicates that it is not seeking privileged and work product information and documents. Declaration of Brian K. Brookey in Support of Motion, ¶ 3.

[3] All has represented that it is preparing an index to indicate to which requests for production the documents are responsive, and is providing the documents to RTI on CD as well. Supplemental Declaration of Brian K. Brookey, ¶ 3.

[4] The Court admonishes the parties that prior to bringing such a motion, the parties must work together in a good faith effort to resolve any differences they may have in this regard, and must fully comply with all requirements for filing discovery motions previously ordered by the Court.

Examining RTI's objections to the requested discovery, it objects to each of the interrogatories and requests for production by raising its "general objections,"[5] an objection that the interrogatories and requests are "vague and ambiguous," that the patents speak for themselves, and by referring to its initial disclosure statement. RTI then indicates that it "reserve[s] the right to offer additional evidence at trial and/or to amend or supplement their response" to the discovery requests. RTI further objects to some of the interrogatories and requests as being overbroad, irrelevant, and as violating the attorney-client privilege and work product doctrine.[6] It goes on to contend that the purported discovery agreement for simultaneous production should be enforced, and "[a]t that point" RTI would provide "verified, substantive supplemental response[s]" to the requests and interrogatories.

RTI's objections to certain of All's interrogatories and requests for documents on the grounds that the discovery requests are vague, ambiguous, or irrelevant are overruled. The Court finds nothing vague or ambiguous about the wording or content of the interrogatories or requests. Further, with limited exceptions noted below, the discovery requests appear to be relevant to the claim or defense of a party. Under Fed.R.Civ.P. 26(b)(1), discovery is permitted of "any matter, not privileged, that is relevant to the claim or defense of any party." As a general matter, Federal Rule of Civil Procedure 26(b) is to be "liberally interpreted to permit wide-ranging discovery of information," even if that information is not ultimately admitted at trial. See Comcast of Los Angeles, Inc. v. Top End International, Inc., 2003 WL 22251149, at *2 (C.D. Cal. July 2, 2003); see also Fed.R.Civ.P. 26(b)(1) ("[r]elevant information need not be admissible at trial if the discovery appears reasonably calculated to lead to the discovery of admissible evidence."). The burden is on RTI to show that discovery should not be allowed (Comcast, at *2, citing Blankenship v. Hearst Corp., 519 F.2d 418, 429 (9th Cir. 1975)); it is not up to RTI to decide what All needs

---

[5] While RTI complains that the Joint Stipulation is defective as All did not include the language of RTI's general objections, the Court finds in the circumstances presented here that this defect is not material to a resolution of this discovery dispute. RTI has provided no explanation or substantiation for any particular general objection.

[6] As All indicates that it is not seeking information subject to attorney-client and work product protection, the Court will not address RTI's objections in this regard.

to proceed in this action. Here, RTI objects to various discovery requests as seeking irrelevant information, including information about settlements or settlement offers, and amounts paid for licenses under the subject patents. The Court agrees with AII that information concerning license payments and settlements is relevant to the issue of determining a reasonable royalty (see Georgia-Pacific Corp. v. U.S. Plywood, Corp., 318 F.Supp. 1116, 1120 (S.D.N.Y. 1970)). As for information concerning RTI's settlements in other cases, the Court will limit production to responsive information that is not subject to confidential settlement agreements. As to such confidential settlement information, RTI shall provide the name of the case, the case number, and the location of the action in which the confidential settlement occurred. Whether or not information concerning licenses and settlements is ultimately admitted at trial is not for this Court to determine at the discovery stage.

The Court also overrules RTI's objections that the interrogatories and requests are overbroad, as those objections lack substantiation or explanation.[7] It is well-established that the burden is on the objecting party to show grounds for failing to provide the requested discovery. See, e.g., Smith v. B & O Railroad Co., 473 F.Supp. 572, 585 (D. Md. 1979); Sherman Park Community Association v. Wauwatosa Realty, 486 F.Supp. 838, 845 (E.D. Wis. 1980); Laufman v. Oakley Building and Loan Co., 72 F.R.D. 116, 121 (S.D. Ohio 1976). RTI cannot simply invoke generalized objections; rather, with respect to AII's discovery requests, RTI

> must show specifically how, despite the broad and liberal construction afforded the federal discovery rules, each [request] is not relevant or how each [request] is overly broad, burdensome or oppressive by submitting affidavits or offering evidence revealing the nature of the burden.

Roesberg v. Johns-Manville Corp., 85 F.R.D. 292, 296 (E.D. Pa. 1980) (citations omitted); Wirtz v. Capitol Air Service, Inc., 42 F.R.D. 641, 643 (D. Kan. 1967). RTI's objections to the requests being overbroad are insufficient. Kansas-Nebraska Natural Gas v. Marathon Oil Co., 109 F.R.D. 12, 24 (D. Neb. 1985) (party objecting to production requests must specify why the requests are

---

[7] However, as to Request No. 21, the Court limits production to all documents concerning litigation against RTI during the preceding ten years **that related to any of the patents at issue in this consolidated action**.

objectionable); Roesberg, 85 F.R.D. at 296-97. Finally, RTI's references to its initial disclosure as a substitute for responding to the interrogatories and requests are wholly inadequate, and its assertion that the patents speak for themselves is not at all responsive to many of the requests in which this is asserted as a basis to refuse discovery. The Court overrules RTI's objections in these areas.

The primary basis for RTI's refusal to provide discovery responses to date is its belief that it would be more cost-effective, and perhaps fairer, to require the simultaneous exchange of discovery. As mentioned above, however, RTI's motion in this regard has been denied. It must now provide All with "verified, substantive supplemental response[s]" to the discovery requests.

CONCLUSION

Accordingly, based on the foregoing, it is **ordered** that All's Motion to Compel is **granted**, as set forth above. No later than 10 business days from the filing date of this Order, RTI shall produce the ordered supplemental responses to All's interrogatories and requests for production and all responsive documents, excluding those legitimately protected by the attorney-client privilege or the work product doctrine.[8]

DATED: March 7, 2006

PAUL L. ABRAMS
UNITED STATES MAGISTRATE JUDGE

[8] As for these documents, RTI must produce a privilege log pursuant to Fed.R.Civ.P. 26(b)(5).

FILED
CLERK, U.S. DISTRICT COURT
APR 21 2006
CENTRAL DISTRICT OF CALIFORNIA
BY DEPUTY
SCANNED

DOCKETED ON CM
APR 24 2006
BY 048

Priority ✓
Send ✓
Enter
Closed
JS-5/JS-6
JS-2/JS-3
Scan Only

UNITED STATES DISTRICT COURT

CENTRAL DISTRICT OF CALIFORNIA

WESTERN DIVISION

ALCATEL INTERNETWORKING, INC.,

Plaintiff,

v.

RATES TECHNOLOGY INC., et al.,

Defendants.

and consolidated action.

No. CV 03-9449-ER (PLAx) ✓
No. CV 05-6459-ER (PLAx)
(Consolidated Actions)

ORDER RE: RTI'S MOTION FOR PROTECTIVE ORDER, AND PLAINTIFF'S CROSS-MOTION TO COMPEL

On March 8, 2006, the Court granted the motion of plaintiff Alcatel Internetworking, Inc. ("All") to compel supplemental responses to its interrogatories and requests for production of documents from defendant Rates Technology Inc. ("RTI"). RTI was ordered to produce supplemental responses to interrogatories and requests for production, and all responsive documents, no later than ten business days from the filing date of the Order, i.e., no later than March 22, 2006. For any documents that RTI contended were legitimately protected by the attorney-client privilege or work-product doctrine, it was ordered to produce a privilege log pursuant to Fed.R.Civ.P. 26(b)(5). On March 22, 2006, RTI served supplemental responses to interrogatories and requests for production of documents. See Declaration of Brian K. Brookey in Opposition to Motion for Protective Order ("Brookey Dec."), at Exhibits 2-3. No documents were

302

produced by RTI in response to the Court's Order.[1] Brookey Dec., ¶ 4. It does not appear that a privilege log was served.

On March 16, 2006, RTI filed its Notice of Withdrawal; on March 27, 2006, it filed a Motion to Dismiss, pursuant to which RTI seeks to "dismiss this entire lawsuit." (Hicks Dec., ¶ 3). In light of this development, RTI argues that the District Court lacks discretion to not dismiss this action, and that the Court must grant RTI's Motion to Dismiss the patent infringement complaint, which RTI contends would render all of plaintiff's claims moot. On April 18, 2006, RTI filed its Motion for Protective Order Re Discovery, in which it seeks an order from the Court that all discovery and discovery motions or applications in this case be stayed until RTI's Motion to Dismiss is decided by the District Court, and for an additional two weeks thereafter to allow RTI to provide further supplemental responses to plaintiff's interrogatories and document requests should the case not be completely dismissed at that time. Plaintiff filed a Cross-Motion to compel RTI's compliance with the Court's March 8, 2006, Order, and for monetary and other sanctions.

Defendant's Motion for Protective Order is **denied** without prejudice. This Court does not have the authority to stay or in any way modify the District Court's discovery schedule. Such a request must be made to the District Court.[2] However, as RTI has conceded the existence of supplemental responses to plaintiff's discovery requests that it has not produced, but which it

---

[1] Although RTI asserts that Robert Epstein produced documents "on RTI's behalf in response to the Court's March 8, Order directing RTI to produce documents" (Declaration of James B. Hicks in Support of RTI's Motion for Protective Order ("Hicks Dec."), ¶ 5), the supporting documentation (Hicks Dec., Ex. D), does not support RTI's contention that any documents produced by Mr. Epstein in response to a subpoena were in fact meant to comply with the Court's Order. Indeed, Mr. Epstein's March 8, 2006, letter to counsel for plaintiff, in which he objects to producing documents in response to the subpoena, makes absolutely no reference to RTI's obligation to produce under the Court's Order.

[2] This is especially true where, as here, pursuant to the District Court's Order Granting Modification of Scheduling Order, all discovery, including discovery motions, shall be completed by May 19, 2006, and discovery motions must be filed and heard prior to that date. With a May 9, 2006, hearing date for RTI's Motion to Dismiss, and its request for two weeks following the District Court's order to provide supplemental responses, the relief sought by RTI would significantly impact -- and could in fact violate -- the District Court's discovery schedule.

would produce upon the District Court's determination concerning its Motion to Dismiss,[3] the Court **orders** that all supplemental responses be produced, consistent with this Court's March 8, 2006, Order, **no later than April 28, 2006**. RTI shall pay plaintiff the sum of $500 for each calendar day after April 28, 2006, that full and complete responses to the Court's March 8, 2006, Order have not been produced.

Plaintiff's Cross-Motion is **denied** without prejudice, as it has not presented its specific contentions in the proper format, and the Joint Stipulation submitted in connection with the Protective Order does not suffice in that regard.

DATED: April 21, 2006

PAUL L. ABRAMS
UNITED STATES MAGISTRATE JUDGE

---

[3] RTI concedes that supplemental responses exist to the discovery it has provided, and has agreed to supplement those response "if the case does remain alive" (Transcript of April 3, 2006, Meet-and-Confer, p. 6, lines 18-19 (Hicks Dec., Ex. O); see also id. at p. 26, lines 17-19; p. 28, lines 17-19; p. 28, line 24 to p. 29, line 1 ("I will provide more information if in fact Judge Rafeedie does not dismiss the case.").

Exhibit F

Civil Action No. 1:07-cv-00442-JJF

UNITED STATES DISTRICT COURT
FOR THE DISTRICT OF MASSACHUSETTS

FILED
IN CLERK'S OFFICE
DEC 9 4 07 PM '97
US DIST... COURT
CLE... OF...
MASS...

MEDIACOM CORPORATION

Plaintiff,

v.

RATES TECHNOLOGY INC.

Defendant.

Civil Action No. 97-10559-WGY

RATES TECHNOLOGY INC.'S
MEMORANDUM OF LAW IN SUPPORT OF CROSS-MOTION
FOR SUMMARY JUDGMENT ON CLAIM CONSTRUCTION

Claim construction is a matter of determining what the claims mean to those of ordinary skill in the art by considering the claims themselves, the specification, and the prosecution history. The terms in a claim are given their ordinary meaning to one of skill in the art when, as in this case, the terms are unambiguous or no special meanings are set forth in the specifications or prosecution histories. The claim construction proposed by Rates Technology Inc. ("Rates") is based on just this practice. On the other hand, the construction proposed by the accused infringer, MediaCom Corporation, ignores the plain wording of the claims, is not supported by the understanding of one of ordinary skill in the art, and improperly limits the claims by the embodiments described in the specification and prosecution history. Indeed, MediaCom adds to the claims several terms that are simply not there, as if out of thin air. Because claim construction is a matter for the Court, and because MediaCom's construction is wrong as a matter of law, this Court should adopt Rates's proposed claim construction.

DOCKETED
62

UNDISPUTED MATERIAL FACTS

Rates is the owner of U.S. Patent Nos. 5,425,085 ("the '085 patent") and 5,519,769 ("the '769 patent"), both of which are directed to the field of "least cost routing." Least cost routing enables telephone callers to automatically route a particular call through the local or long-distance service carrier (e.g., AT&T, MCI, Sprint, etc.) offering the lowest available billing rate for that call. In particular, the '085 patent (**Exhibit A**) is directed to devices that connect into the phone line (i.e., between the telephone and the wall jack) and that perform least cost routing. The '769 patent (**Exhibit B**) is directed to methods and systems for automatically updating the databases of billing rate parameters used by least cost routing devices or by other call rating devices. The file histories for both patents are attached as **Exhibits C** and **D**, respectively.[1]

Given the nature of claim construction, which typically depends solely on a reading of the claims themselves, there are really no other issues of fact to consider. The parties' positions on claim construction have already been stated in their papers (**Exhs. E-F**) exchanged pursuant to the Case Management Scheduling Order in this case.[2] The understanding of one of ordinary skill in the art is provided by Dr. Stephen K. Burns in his accompanying declaration. Dr. Burns, who holds three degrees in electrical engineering from M.I.T., holds eight patents in a variety of fields, and taught the course in telephony at M.I.T. for over twenty years, is well-qualified to

---

[1] All exhibits are included in the accompanying Appendix of Exhibits. Page references for the file histories are to the numbers handwritten in the lower right corner of each page, which have been inserted for easy reference.

[2] Under the Case Management Scheduling Order, the parties exhanged a series of briefs on their proposed claim construction during October 1997. Rates's intitial paper on claim construction, entitled Rates Technology Inc.'s Preliminary Statement Of Proposed Patent Claim Construction, is included in the Appendix of Exhibits as **Exhibit E**. MediaCom's initial position paper, entitled Plaintiff MediaCom's Claim Interpretation for U.S. Patent Nos. 5,519,769 and 5,425,085, is attached as **Exhibit F**. Rates's opposition to MediaCom's position is attached as **Exhibit G**, while MediaCom's opposition is attached as **Exhibit H**.

discuss the technologies at issue and the understanding of those of ordinary skill in the art.

ARGUMENT

I. Standards of Claim Construction

Claim construction is a matter for the Court. Markman, 52 F.3d at 979. Claim terms are given their ordinary meaning to one of ordinary skill in the art unless it appears from the specification and file history that the inventor intended special meanings. Bell Communications Research, Inc. v. Vitalink Communications Corp., 55 F.3d 615, 620 (Fed. Cir. 1995); Intellicall, Inc. v. Phonometrics, Inc., 952 F.2d 1384, 1387-88 (Fed. Cir. 1992 (inventor can be his own lexicographer so long as he expressly defines the term somewhere in the patent disclosure). In this case, all terms in the claims of the '769 patent have their ordinary meaning to one of ordinary skill in the art, no special definitions appearing elsewhere in the patent. Bell Communications Research, 55 F.3d at 620; Intellicall, Inc., 952 F.2d at 1387.[3]

To properly determine the meaning of claims, courts consider the claims themselves, the patent specification, and the file history. Expert testimony and other "extrinsic" evidence (such as dictionaries, technical treatises, and inventor testimony) may also be relevant for an

---

[3] Because claim construction depends on the understanding of one of ordinary skill in the art, an opinion on that understanding is provided by Dr. Stephen K. Burns in his accompanying declaration (hereafter, the "Burns Decl."). Dr. Burns, who holds three degrees in electrical engineering from M.I.T., holds eight patents in a variety of fields, and taught the course in telephony at M.I.T. for over twenty years, is well-qualified to discuss the technologies at issue and the understanding of those of ordinary skill in the art. MediaCom has not presented an expert opinion on the understanding of one of ordinary skill in the art. Because MediaCom's claim construction is not based on the understanding of one of ordinary skill, the Court should not adopt MediaCom's position.

understanding of how one of ordinary skill in the art would interpret the claims and for an understanding of the technology. Markman, 52 F.3d at 979; *see also* Eastman Kodak Co. v. Goodyear Tire & Rubber Co., 114 F.3d 1547, 1552 (Fed. Cir. 1997); Vitronics Corp. v. Conceptronic, Inc., 90 F.3d 1576, 1582-83 (Fed. Cir. 1996).

Although the patent specification and file history are consulted in the process of interpreting the claims, "[t]he written description part of the specification itself *does not delimit* the right to exclude. That is the function and purpose of claims." Markman, 52 F.3d at 980 (emphasis added). *See also* Ekchian v. Home Depot, Inc., 104 F.3d 1299, 1303 (Fed. Cir. 1997); Laitram Corp. v. Cambridge Wire Cloth Co., 863 F.2d 855, 865 (Fed. Cir. 1988) ("References to a preferred embodiment, such as those often present in a specification, are not claim limitations"); Texas Instruments, Inc. v. United States Int'l Trade Comm'n, 805 F.2d 1558, 1563 (Fed. Cir. 1986) ("This court has cautioned against limiting the claimed invention to preferred embodiments or specific examples in the specification").

Likewise, although the prosecution history can aid claim construction, it cannot "enlarge, diminish, or vary" the limitations in the claims. Markman, 52 F.3d at 980. Indeed, statements made in the prosecution history "cannot be used to add an entirely new limitation to the claim." Serrano v. Telular Corp., 111 F.3d 1578, 1584 (Fed. Cir. 1997).

As shown in the position papers on the parties' claim construction (Exhs. E-H), Rates follows these principles, while MediaCom violates these principles of claim construction. In particular, MediaCom's reading of the claims (Exhs. F and H) fails to consider the understanding of one of ordinary skill and, instead, improperly relies on particular embodiments from the specifications and file histories to limit the claims, while ignoring the plain wording of the claims themselves. Such claim construction is misleading and improper as a matter of law.

II. The '085 Patent (Least Cost Routing Device)

A. Claim 1

1. A device for routing telephone calls along a least cost route originating from a first telephone to a second telephone having an associated telephone number via a network having a plurality of alternate communication switch paths corresponding to different carriers which can be chosen to route the call and normally providing a current to said first telephone when said first telephone is in use, comprising

a housing forming an enclosure and comprising first jack means for connection to said first telephone and second jack means for connection to said network,

switch means operatively connected to said first jack means for disconnecting said first telephone from said network,

means operatively connected to said switch means for generating a current through said switch means to the first telephone, corresponding to a current provided by said network,

database means for storing billing rate parameters for determining a least cost communication path for call corresponding to said telephone number,

means operatively connected to said switch means for detecting and storing said telephone number originating from the first telephone,

means for addressing said database means for identifying a plurality of communication switch paths to said second telephone and the cost rate of each path,

means for comparing the cost rate of each path so as to determine a least cost route, and

means operatively connected to said switch means and said second jack means for generating a number sequence corresponding to a desired carrier so that said call is routed through said second jack means to the selected communication path and carrier to establish a switched connection between said first telephone and said second telephone phone [sic].

Exh. A, '085 patent at col. 7, lns. 1-39.

In the preamble of Claim 1, the "first telephone" is the telephone originating the call. The "second telephone" is the destination that the user of the first telephone wants to call. A "network" is a telephone network over which telephone calls may be transmitted. For example, the North American public switched network consists of the telephone lines and exchange switches of the local exchanges (e.g., Bell Atlantic), which provide access to the various carriers,

such as AT&T, MCI, Sprint, and a host of other telephone service providers. The network also includes the central office (actually many central offices) that contains the switching equipment, signaling equipment, and batteries for supplying power to operate the telephones. Declaration of Stephen K. Burns in Support of Claim Construction ("Burns Decl.") at ¶ 17. The least cost routing device of the preamble comprises the following eight elements:

a. The first element, "a housing forming an enclosure and comprising first jack means for connection to said first telephone and second jack means for connection to said network," should be given its ordinary meaning to one of ordinary skill in the art. That is, no special definitions of any of the terms in this element appear in the specification or prosecution history, so the terms are given their ordinary meaning. Bell Communications Research, Inc., 55 F.3d at 620. The term "means for connection" simply refers to a jack, i.e., a female fitting in an electric circuit into which a plug fits, a plug for connection to the jack, or equivalent structures for interconnecting the device into the telephone line. Burns Decl. at ¶ 18.a.

Also, according to the plain wording of the claim, as understood by one of ordinary skill, the housing must enclose the means of connection. Other components of the device *may* be enclosed by the housing, but nothing in the claim requires that the other components *must* be enclosed by the housing element. Burns Decl. at ¶ 18.a.

b. The second element, "switch means operatively connected to said first jack means for disconnecting said first telephone from said network," is directed to one or more switches for controlling a circuit so that one state or position permits signaling between the first telephone and the network and a second state or position disables signaling between the first telephone and the network. In other words, this element is directed to a mechanism for isolating the telephone addressing signals (i.e., the number dialed) from the telephone network. One of ordinary skill in the art would know that the term "switch means" identifies a definite structure (a configuration

of one or more switches) without having to consider the particular embodiment of the switch means described in the specification. Burns Decl. at ¶ 18.b.[4]

Nevertheless, even if this element were limited by the embodiment described in the specification (the 2 Form C switch arrangement shown in Fig. 2, block 36) and to equivalent structures under § 112, § 6, one of ordinary skill would know that there are many configurations of switches--whether Form A, B, or C switches, shunting mechanisms, relays, or other mechanical or solid state devices--that could be easily substituted for the 2 Form C switch to accomplish the same function (disconnecting the telephone from the network), in the same way (by redirecting or changing the path of the signaling between the network and telephone), to get the same result (isolation of the telephone from the network until the call can be routed). Burns Decl. at ¶18.b.

c. To one of ordinary skill in the art, the third element, "means operatively connected to said switch means for generating a current through said switch means to the first

---

[4] An inventor is allowed under 35 U.S.C. § 112, ¶ 6, to cast an element in a claim as a means for performing a function (known as a "means-plus-function" element) rather than as a specific structure. Paragraph 6 of Section 112 provides that

> An element in a claim for a combination may be expressed as a means or step for performing a specified function without the recital of structure, material, or acts in support thereof, and such claim shall be construed to cover the corresponding structure, material, or acts described in the specification and equivalents thereof.

Use of the word "means," however, does not blindly trigger application of § 112, ¶ 6. Cole v. Kimberly-Clark Corp., 102 F.3d 524, 531 (Fed. Cir. 1996); York Products, Inc. v. Central Tractor Farm & Family Center, 99 F.3d 1568, 1574 (Fed. Cir. 1996); Greenberg v. Ethicon Endo-Surgery, Inc. 91 F.3d 1580, 1583 (Fed. Cir. 1996). *See also* Caterpillar Inc. v. Detroit Diesel Corp., 961 F. Supp. 1249, 1255 (N.D. Ind. 1996) ("paragraph six's application is not triggered simply by the use of functional language or the magic words 'means for ___ing'"); Amp, Inc. v. Fujitsu Microelectronics, Inc., 853 F. Supp. 808, 820-21 (despite use of the term "means," § 112, ¶ 6, did not apply because the "means" clause sufficiently recited a definite structure). Rather, a court must decide, on an element-by-element basis, whether paragraph 6 applies. Cole v. Kimberly-Clark Corp., 102 F.3d at 531. Paragraph 6 typically does not apply when the "means" clause recites a definite structure. Id. Such is the case here.

telephone, corresponding to a current provided by said network," is directed to local circuitry or equivalents that, when put in connection with the first telephone by operation of the switch means, provides power to excite or operate the telephone that substitutes for the current that would otherwise be provided by the network. Burns Decl. at ¶ 18.c.

One possible embodiment of this element is shown in the specification as the "local CO current source 38" at col. 3, lines 54-56, and in Fig. 2, block 38. This circuitry draws power from the telephone network and converts it to a current capable of energizing the telephone. Other possible embodiments include any equivalents for providing power to the telephone. § 112, ¶ 6. Such equivalents could include current regulators, voltage regulators, voltage regulators configured as current regulators, and any other circuitry capable of providing power to energize the telephone. Burns Decl. at ¶ 18.c.

d. The fourth element, "database means for storing billing rate parameters for determining a least cost communication path for call corresponding to said telephone number," is directed to a database of the parameters used during the least cost routing analysis. According to the patent, and to one of ordinary skill in the art, the database could be contained, for example, in an Eprom (electronic programmable read only memory) chip, as specified at col. 4, lines 5-9; in a "storage unit 202 ", as specified at col. 6, line 35; or in any other electromagnetic or mechanical device capable of storing data. Burns Decl. at ¶ 18.d.

One of ordinary skill would understand that a "storage unit" or equivalent device could be the hard disk of a computer, such as in a personal computer operatively connected to (i.e., accessible by) other components of the least cost routing device. Similarly, a floppy disk, CD, cassette tape, reel-to-reel tape, or similar media capable of being read by a computer could also

store the billing rate parameters. Burns Decl. at ¶ 18.d.

e. The fifth element, "means operatively connected to said switch means for detecting and storing said telephone number originating from the first telephone," is directed to circuitry that detects the tones associated with the telephone number entered by the caller (the user of the first telephone) and places data corresponding to that telephone number into memory or a storage device. Such circuitry could include, but is not limited to, the DTMF tone detector described in the specification (Fig. 2, block 88; col. 2, lns. 24-27). One of ordinary skill in the art would know that a variety of common and readily available integrated circuits with DTMF detection capabilities typically include registers or other circuitry capable of storing one or more digits of the telephone. Burns Decl. at ¶ 18.e.

f. The sixth element, "means for addressing said database means for identifying a plurality of communication switch paths to said second telephone and the cost rate of each path," is directed to a device that addresses a database in order to identify the possible routes through the network to the destination telephone and the costs of using those routes for the call. Possible embodiments of this element include any computing devices such as the microprocessor recited in the specification at col. 4, lines 13-15, or any equivalents capable of performing the same function. § 112, ¶ 6. To one of ordinary skill in the art relying on the plain wording of the claim itself, any number of data processing units, such as the processor of a computer operatively connected to other components of the device, or such as field programmable logic array circuitry, could be the means for addressing the database means. Burns Decl. at ¶ 18.f.

g. The seventh element, "means for comparing the cost rate of each path so as to determine a least cost route," is directed to any computer processor or any equivalent device or circuitry capable of identifying and comparing available paths and/or carriers for routing a call based on cost. Burns Decl. at ¶ 18.g.

h. The eighth element of Claim 1, "means operatively connected to said switch means and said second jack means for generating a number sequence corresponding to a desired carrier so that said call is routed through said second jack means to the selected communication path and carrier to establish a switched connection between said first telephone and said second telephone phone [sic]," is directed to a signal generator (such as a DTMF tone generator or equivalent circuitry), which, *inter alia*, generates the tone signals corresponding to the numerical prefix of the selected carrier. These tone signals are then sent through the second jack means out to the network and the telephone company's central office, which recognizes the signals as the destination for the call and makes the appropriate connections through the central office switches to allow for communication between the first and second telephones. Burns Decl. at ¶ 18.h.

III. The '769 Patent (Method and System for Updating a Call Rating Database)

A. Claim 1

1. A method for updating a database that stores billing rate parameters for a call rating device used for cost determinations for a calling station, comprising the steps of

connecting at a predetermined time and date via a data transfer line the call rating device to a rate provider having billing rate parameters for a plurality of calling stations,

transmitting over the data transfer line indicia identifying the call rating device and the date and time of the last update of the billing rate parameters,

verifying if billing rate parameters should be updated, and

transmitting from the rate provider to the call rating device the updated billing rate parameters when the rate provider determines that an update is required.

Exh. B, '769 patent at col. 6, lns. 35-49.

Claim 1 of the '769 patent is directed to a method for updating a database of billing rate

parameters used by a call rating device, such as the least cost routing device claimed in the '085 patent. The "calling station" can be a telephone, a pay telephone, a fax machine, a personal computer, or an equivalent device. Burns Decl. at ¶ 20. "Billing rate parameters" can be any information, however configured, that can be used by the call rating device to determine call rates. Id. The method of Claim 1 comprises the steps disclosed in the following four elements:

a. The first element is "connecting at a predetermined time and date via a data transfer line the call rating device to a rate provider having billing rate parameters for a plurality of calling stations." Here, the term "connecting" refers to the step of establishing communication between the call rating device and the rate provider. Burns Decl. at ¶ 21.a. The "data transfer line" could be any medium for conveying information, such as a telephone network line (including, e.g., wires, cable, fiber optics, etc.), a satellite or microwave link, broadcast transmission, a LAN (Local Area Network) line, a T1 line, ISDN line, or any other medium over which information can be transmitted. Id.

The "rate provider" is the service or system operator from which the call rating devices get the updated billing rate parameters. The rate provider may employ any type of processing unit or computer system. The computer could be a large capacity computer, a minicomputer, or a personal computer, depending on the number of subscribers, or an equivalent device for providing billing rate parameters to call rating devices. Id.

The call rating device connects to the rate provider at a "predetermined time and date." To one of ordinary skill in the art, this phrase simply means that the device connects automatically, without the need for constant user intervention. This element does not specify who or what predetermines the time and date, and that is not important to the invention. Id.

b. The second element, "transmitting over the data transfer line indicia identifying the call rating device and the date and time of the last update of the billing rate parameters," is

directed to the step of sending to the rate provider a code or any other identifier that enables the rate provider to determine which call rating device is connecting to the rate provider and at what time that particular call rating device last received an update of the billing rate parameters. Burns Decl. at ¶ 21.b.

c. The third element, "verifying if billing rate parameters should be updated," is directed to the steps of establishing whether it is proper to transmit to the call rating device an update for any billing rate parameters. This verification step can be performed by the call rating device, by the rate provider, or by some other device. Burns Decl. at ¶ 21.c.

d. The fourth element, "transmitting from the rate provider to the call rating device the updated billing rate parameters when the rate provider determines that an update is required," is directed to the step of sending any portion of the billing rate parameters from the rate provider to the call rating device upon determining that such update is proper. This step could also include making other modifications to the database of billing rate parameters not involving a complete or partial replacement of all parameters. That is, one of ordinary skill in the art would understand that the "updating" step refers to modifying only those portions of the database necessary to keep it current. Updating can thus involve adding, removing, or otherwise modifying data. Burns Decl. at ¶ 21.d.

B. Claim 11

11. A method for updating a database that stores billing rate parameters for a call rating device associated with a calling station operatively connected to a telephone network, comprising

calling at a predetermined date and time a rate provider having billing rate parameters for a plurality of calling stations so as to connect between the calling station with the associated call rating device and the rate provider,

transmitting over the telephone network to the rate provider the phone number of the calling station and the date and time of the last update of the billing rate parameters.

verifying if the billing rate parameters should be updated, and
transmitting over the telephone network to the calling station the updated billing rate parameters when the rate provider determines that a database update is required.

Exh. B, '769 patent at col. 7, lns. 14-32.

Claim 11 contains many of the same terms used in Claim 1, and those terms have the same meaning. Certain elements of Claim 11, however, are different. The method of connecting the calling station to the rate provider is by "calling," that is, by placing a telephone call or otherwise establishing access to a network. In addition, rather than transmission of "indicia" identifying the call rating device and date and time of the last update, as in Claim 1, Claim 11 requires transmission of the telephone number of the calling station and the date and time of the last update themselves. Third, the updated billing rate parameters are transmitted over the telephone network, rather than over any type of data transfer line, as permitted by Claim 1. Burns Decl. at ¶ 23.

C. Claim 23

23. A method for updating subscriber databases that store billing rate parameters for call rate devices which are associated with respective subscriber calling stations operatively connected to a telephone network, comprising the steps of
each subscriber station calling at a scheduled time a rate provider having billing rate parameters for each calling station, wherein the scheduled time for each call is such that the calls from each calling station are substantially spaced apart in time from each other,
each station transmitting over the telephone network the respective phone number of its station and the date and time of the last update of the billing rate parameters,
verifying in the rate provider that an update is required, and
transmitting over the telephone network from the rate provider to the calling station the updated billing rate parameters when an update is required.

Exh. B, '769 patent at col. 8, lns. 4-21

This claim is also similar in many respects to Claims 1 and 11, although there are some

important differences. For example, Claim 23 adds the limitation that the calling station must be that of a "subscriber," which is any individual or entity that signs up for or agrees to receive the call rating database update service. Burns Decl. at ¶ 25.

Claim 23 also teaches that calls from each subscriber calling station are "scheduled" so that they are not received by the rate provider all at once. To one of ordinary skill in the art, this scheduling feature is also automatic and evokes the concept of "load balancing," which is the process of ensuring that the rate provider's system is not overloaded. Thus, a number of calls could be made to the rate provider at the same time so long at that number does not exceed the system's capacity to handle calls. By contrast, Claims 1 and 11 require only that the given device connect or call into the rate provider at a "predetermined time and date," without concern for the load on the rate provider's system capacity. Burns Decl. at ¶ 26.

One other difference in Claim 23 is that the verifying step is expressly limited to being performed "in the rate provider." By contrast, Claims 1 and 11 do not limit where the verifying step is performed, and it would be improper to read this limitation from Claim 23 into Claims 1 and 11, as MediaCom has attempted to do (Exh. F, p. 3). *See* Environmental Designs, Ltd. v. Union Oil Co. of California, 713 F.2d 693, 699 (Fed. Cir. 1983) ("It is improper for courts to read into an independent claim a limitation explicitly set forth in another claim"), *cert. denied*, 464 U.S. 1043 (1984). *See also* Burns Decl. at ¶ 27.

D. Claim 35

35. A call rating updating system comprising
a call rating device, including a database that stores current updated billing rate parameters used for cost determinations for a calling station,
a data transfer line operatively connected to the call rating device,
means for transmitting over the data transfer line indicia information identifying the call rating device and update information identifying the last update of the billing rate parameters, and
a rate provider operatively connected to said data transfer line, said rate

provider including
a) a database having updated billing rate parameters for a plurality of calling stations,
b) means for receiving the information from the call rating device,
c) means for verifying if billing rate parameters should be updated, and
d) means transmitting from the rate provider to the call rating device the updated billing rate parameters when the rate provider determines that an update is required.

Exh. B, '769 patent at col. 8, ln. 61 - col. 9, ln. 16.

Claim 35 is directed to a system comprising a combination of components that permit updating of the billing rate parameters used by a call rating device to make cost determinations for a calling station. Terms such as "rate provider," "indicia," "data transfer line," and "billing rate parameters" have the same meaning as they do in Claim 1. Burns Decl. at ¶ 29.

As for other terms, the "calling station" may include, for example, a telephone, a fax machine, a modem, a personal computer, or other device capable of establishing access to a telephone network. The "means for transmitting" could comprise a "network interface," a modem, a telephone, a data link, or any other mechanism for transmitting data from the calling station to the rate provider. Likewise, the "means for receiving the information from the call rating device" is directed to a network interface, a modem, a telephone, data link, or an equivalent device. Burns Decl. at ¶ 30.

"Means for verifying if billing rate parameters should be updated" is directed to a device or component for performing the verification, such as a computer with suitable software or other processing unit. Burns Decl. at ¶ 31.

E. Claim 43

43. A system for updating a database having billing rate parameters for determining the cost of telephone calls originating from a calling station to a destination calling station via a telephone network, comprising
a calling station operatively connected to the telephone network, and

including database means associated with the calling station for storing billing rate parameters for determining the cost of the phone call, and including means for transmitting over the telephone network information identifying the phone number of the calling station and the date and time of the last update of the billing rate parameters,

rate providing means operatively connected to the phone network for storing billing rate parameters for calling stations, said rate providing means including means for receiving said information from the calling station, said rate providing means including:

a) control means for determining whether the calling party database should be updated, and

b) means for transmitting updated billing rate parameters to the calling party when an update is required.

Exh. B, '769 patent at col. 10, lns. 1-21.

In this claim, "database means" is directed to a device capable of storing a database. Illustrative embodiments include an EEPROM chip (col. 3, lines 27-28), "any nonvolatile storage such as currently used with IBM Compatible PCs," (col. 3, lines 26-27), or equivalent structures for storing billing rate parameters. § 112, ¶ 6. One of ordinary skill in the art would know that a nonvolatile storage unit (i.e., one that cannot be erased merely by turning off the power) would include a computer hard disk, floppy disk, CD, cassette or reel-to-reel tape, or similar media capable of being read by a computer. Burns Decl. at ¶ 33. Moreover, the database need not be physically located within the calling station but must only be accessible to the calling station. An example would by a database residing in a computer associated with or operatively connected to the calling station. Id.

"Rate providing means" is directed to a computer system, processing unit, or equivalent device that has the capability to store billing rate parameters, to receive information from the calling stations to determine whether the calling station database should be updated, and to transmit updated billing rate parameters to the calling station when required. Burns Decl. at ¶ 34. One possible embodiment of a rate providing means includes a computer or other processing unit

associated with the rate provider. **Exh. B**, col. 4, lines 41-42. The computer or processing unit may or may not include other hardware and peripherals, such as a server or other device for managing communications with the calling stations. Id.

The rate providing means includes a "control means for determining whether the calling party database should be updated" and a "means for transmitting updated billing rate parameters." The "means for transmitting" is directed to a modem, a telephone, data link, or any other mechanism capable of interfacing with a network. The "control means" may be a computer system, a processing unit, or equivalent device capable of determining whether any part of the database of the calling party should be updated. Burns Decl. at ¶ 35.

CONCLUSION

For all of the foregoing reasons, this Court should construe the claims as proposed by Rates and should grant summary judgment ordering the claim construction proposed by Rates above.

Dated: December 9, 1997

RATES TECHNOLOGY INC.
By its attorneys,

Lee Carl Bromberg, BBO # 058480
Robert M. Asher, BBO # 022865
Erik Paul Belt, BBO # 558620
BROMBERG & SUNSTEIN LLP
125 Summer Street
Boston, MA 02110
(617) 443-9292

CERTIFICATE OF SERVICE

I certify that, on the above date, a true copy of this document was served by hand delivery on counsel of record for each other party.

Erik Paul Belt

Exhibit G

Civil Action No. 1:07-cv-00442-JJF

US005425085A

United States Patent [19]

Weinberger et al.

[11] **Patent Number: 5,425,085**

[45] **Date of Patent: Jun. 13, 1995**

[54] **LEAST COST ROUTING DEVICE FOR SEPARATE CONNECTION INTO PHONE LINE**

[75] Inventors: **Gerald J. Weinberger**, Smithtown; **Roger C. Lee**, Wading River, both of N.Y.

[73] Assignee: **Rates Technology Inc.**, Smithtown, N.Y.

[21] Appl. No.: **210,670**

[22] Filed: **Mar. 18, 1994**

[51] **Int. Cl.**[6] **H04M 15/00**; H04M 7/00

[52] **U.S. Cl.** **379/112**; 379/111; 379/113; 379/114; 379/116; 379/130; 379/131; 379/219; 379/220; 379/221

[58] **Field of Search** 379/111–116, 379/130–132, 219–221

[56] **References Cited**

U.S. PATENT DOCUMENTS

4,122,308	10/1978	Weinberger et al.	379/112
4,136,262	1/1979	Clark, Jr.	379/143
4,198,545	4/1980	Haist et al.	379/113
4,209,668	6/1980	Weinberger et al.	379/114
4,410,765	10/1983	Hestad	379/112
4,585,904	4/1986	Mincone	379/131
4,656,657	4/1987	Hunsicker	379/131
4,751,729	6/1988	Treat	379/113
4,813,065	3/1989	Segala	379/112
4,888,822	12/1989	Weinberger et al.	379/130
4,935,956	6/1990	Hellwarth	379/114
5,163,042	11/1992	Ochiai	379/220

Primary Examiner—Stephen Chin
Assistant Examiner—Vijay Shankar
Attorney, Agent, or Firm—James & Franklin; Harold James; Robert L. Epstein

[57] **ABSTRACT**

A device interconnects within the phone line coming from a first phone and routes telephone calls along a least cost route originating from the first telephone to a second telephone via the network. A housing forms an enclosure and has a first jack for interconnection to the phone side of the phone line and a second jack for interconnection to the network side of the phone line. The housing forms an enclosure which includes a switch for disconnecting the first phone from the network. The device generates a source of current through the switch to the first phone corresponding to the amount of current provided by the phone network. A database stores billing rate parameters for determining various communication paths of different carriers based on parameters such as the time and date of the call. Phone calls from the first phone are detected and stored. The database is addressed and a plurality of communication switch paths are identified as well as the cost rate of each path. The cost rates for each identified path are compared to determine a least cost route for the call. The device generates a number sequence corresponding to a desired carrier so that the dialed call is routed through the second jack and phone line to the selected communication path and carrier so as to establish a switched connection between the first and second phones.

26 Claims, 6 Drawing Sheets

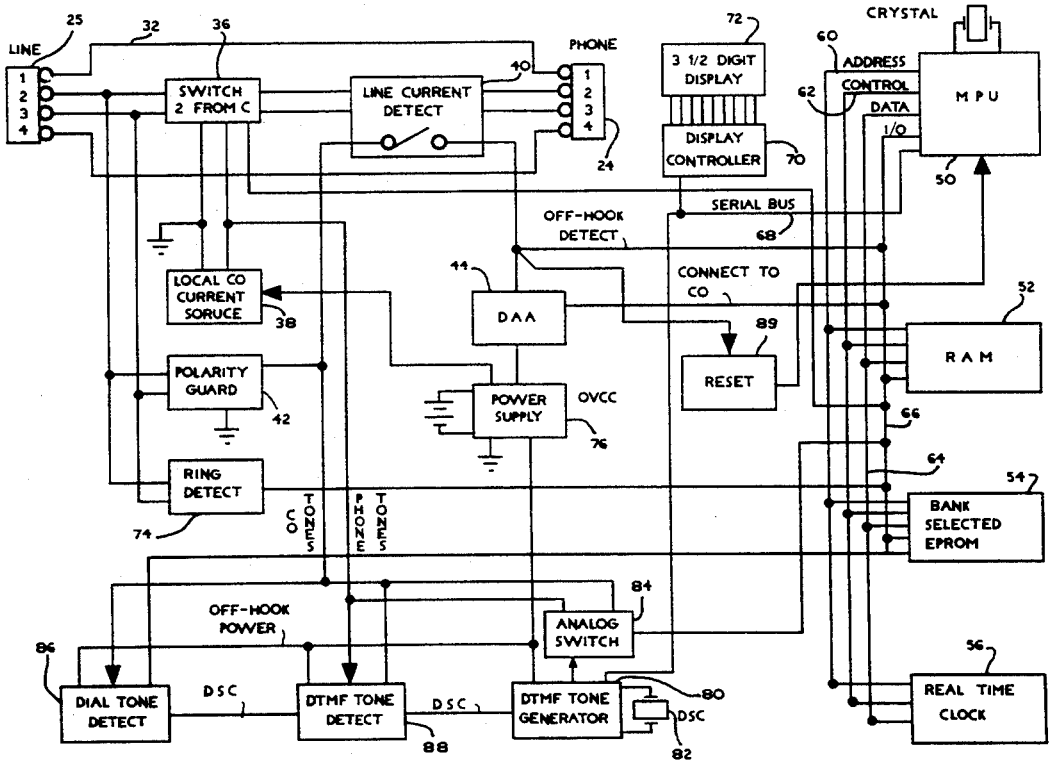

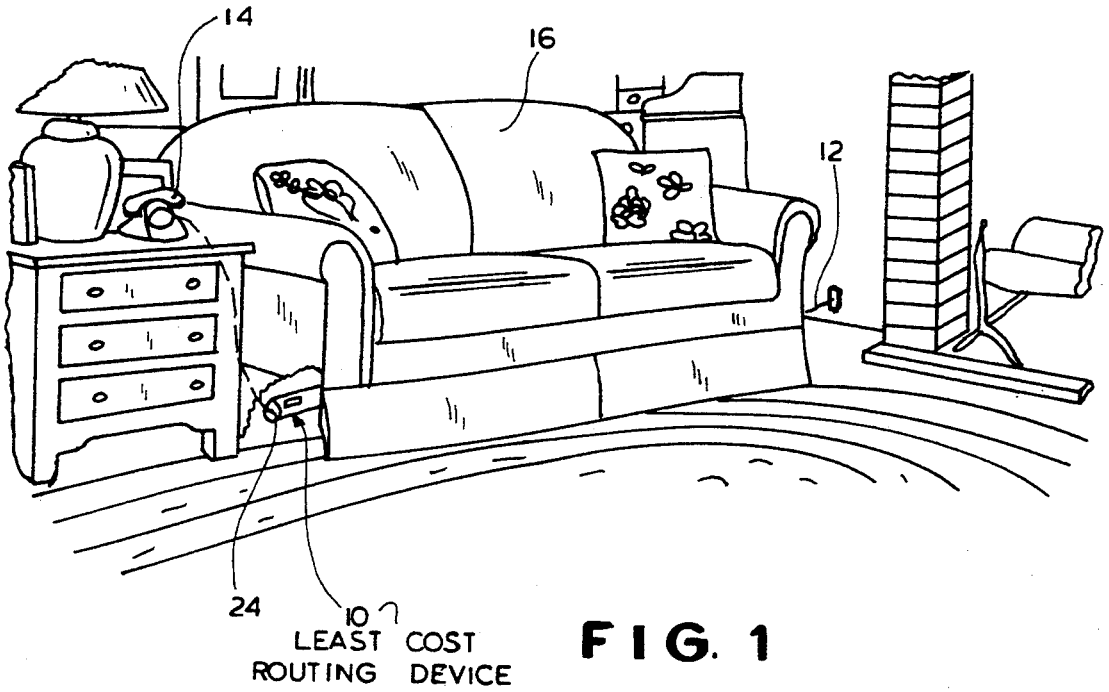
14
16
12
24
10
LEAST COST
ROUTING DEVICE

FIG. 1

FIG. 7

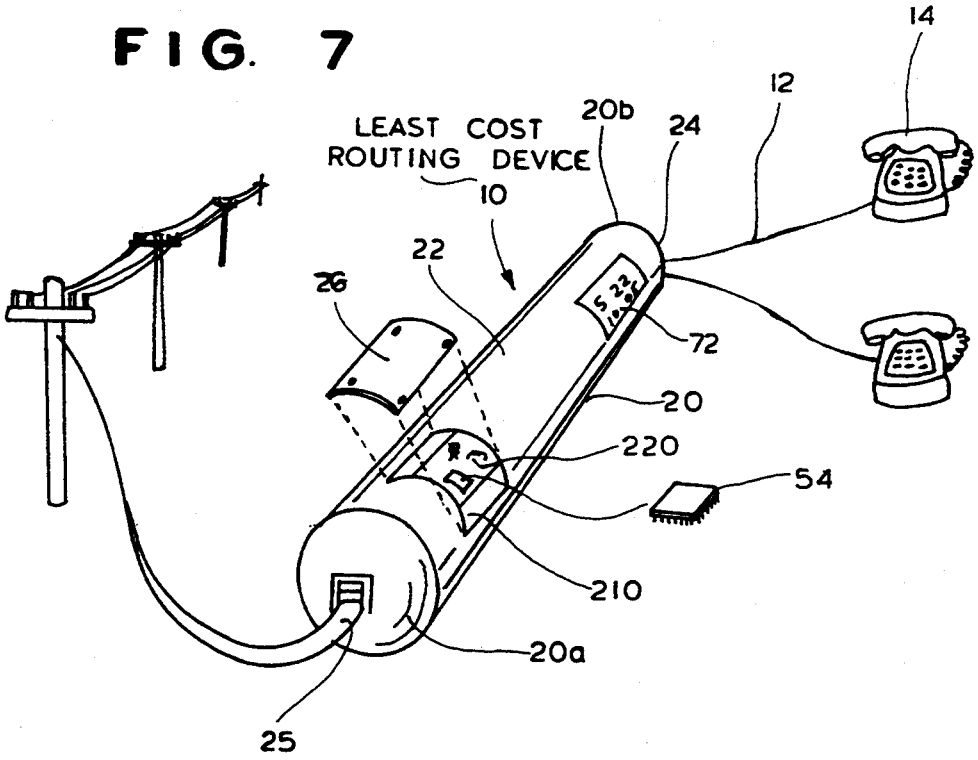
14
12
LEAST COST
ROUTING DEVICE
10
20b
24
22
26
72
20
220
54
210
20a
25

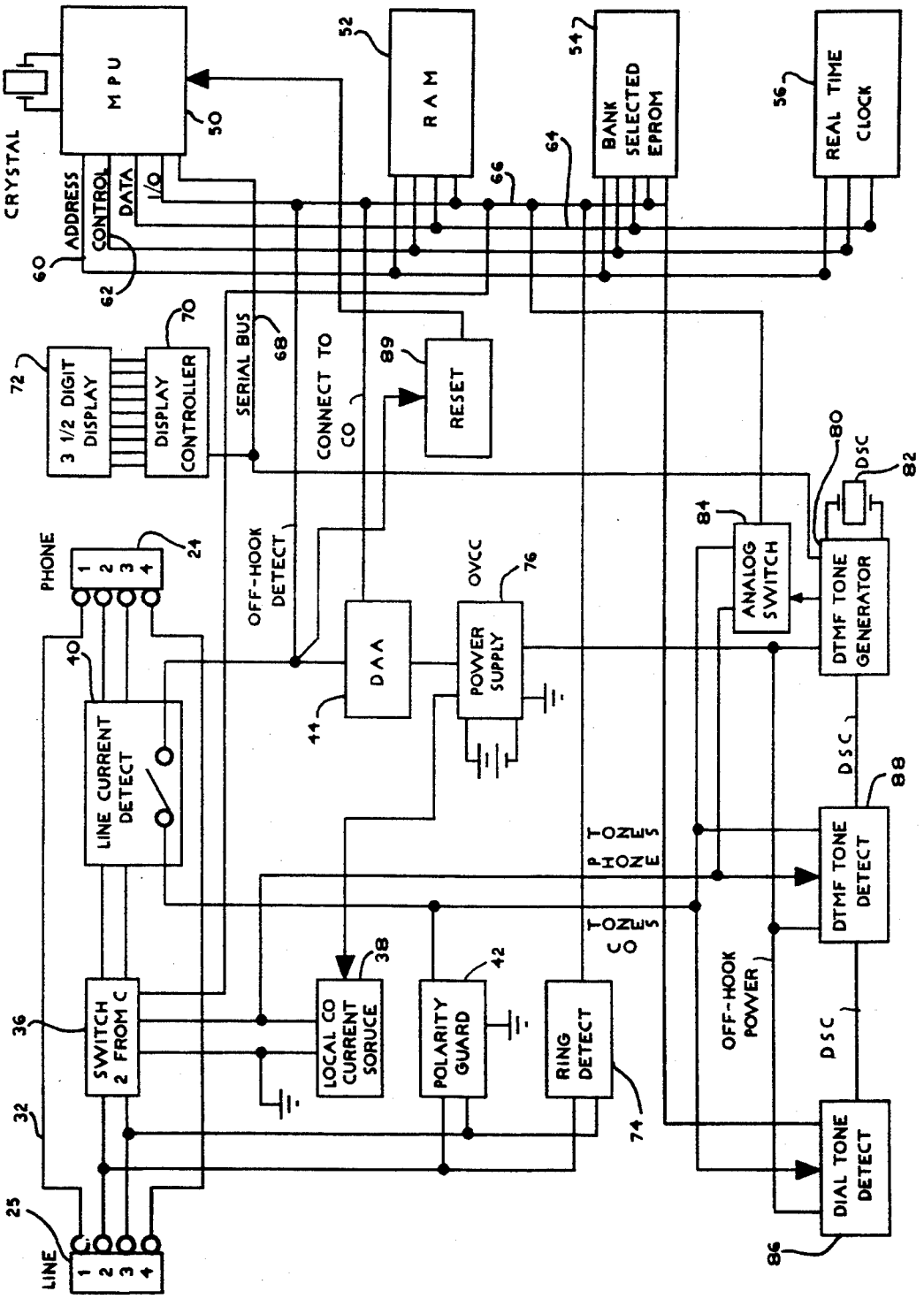
MPU
50
RAM
52
BANK SELECTED EPROM
54
REAL TIME CLOCK
56
CRYSTAL
ADDRESS
CONTROL
DATA
I/O
60
62
64
66
SERIAL BUS
68
DISPLAY CONTROLLER
70
3 1/2 DIGIT DISPLAY
72
CONNECT TO CO
RESET
89
DSC
80
82
ANALOG SWITCH
84
DTMF TONE GENERATOR
PHONE
24
OFF-HOOK DETECT
OVCC
76
DAA
POWER SUPPLY
40
44
LINE CURRENT DETECT
DSC
88
DTMF TONE DETECT
TONES PHONE
TONES CO
SWITCH 2 FROM C
36
LOCAL CO CURRENT SORUCE
38
POLARITY GUARD
42
RING DETECT
74
OFF-HOOK POWER
DSC
32
DIAL TONE DETECT
86
25
LINE
1 2 3 4

FIG. 2

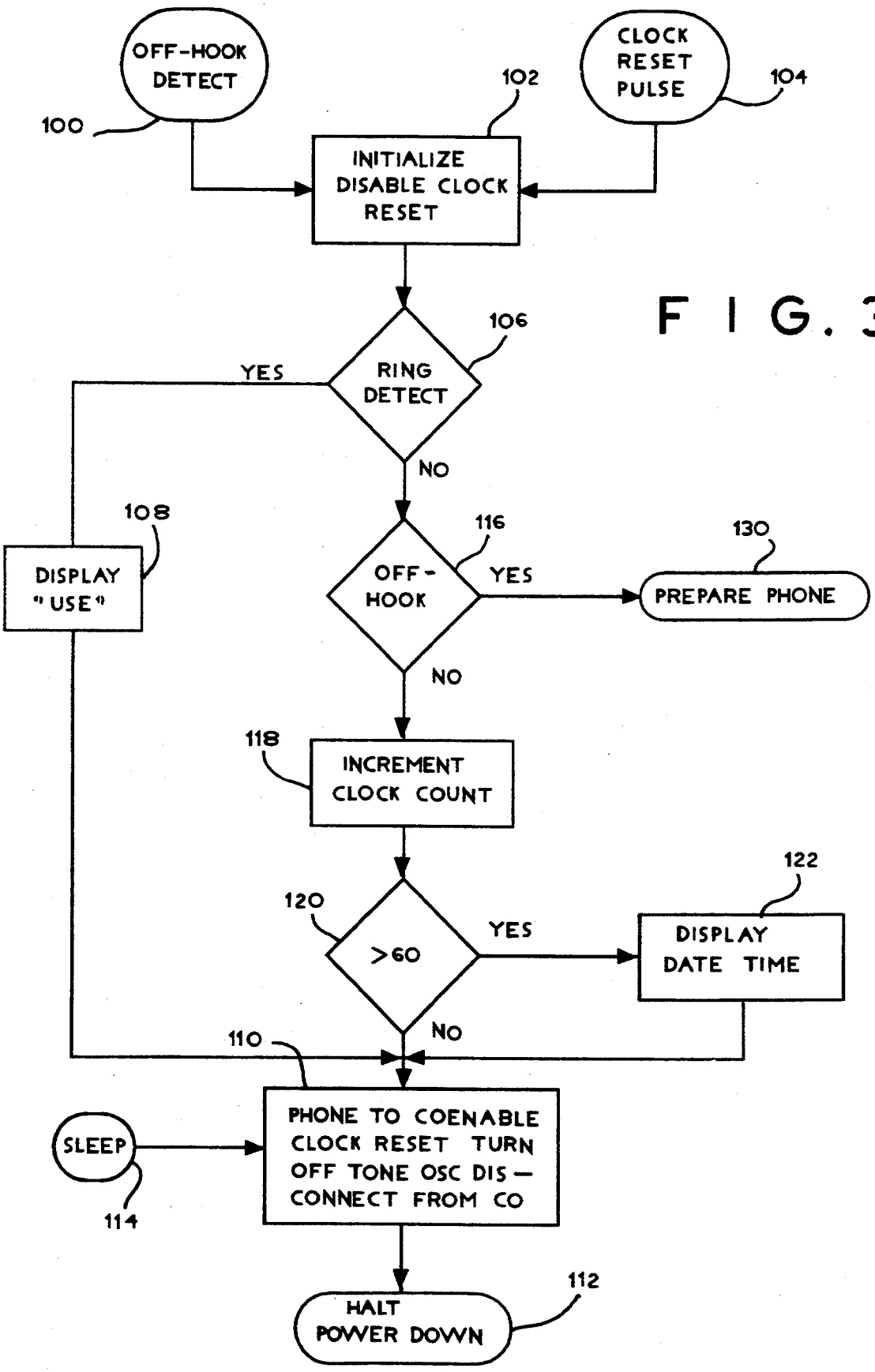
OFF-HOOK DETECT
100
CLOCK RESET PULSE
104
102
INITIALIZE DISABLE CLOCK RESET
106
RING DETECT
YES
NO
108
DISPLAY "USE"
116
OFF-HOOK
YES
130
PREPARE PHONE
NO
118
INCREMENT CLOCK COUNT
120
>60
YES
122
DISPLAY DATE TIME
NO
110
SLEEP
114
PHONE TO COENABLE CLOCK RESET TURN OFF TONE OSC DIS— CONNECT FROM CO
112
HALT POWER DOWN

FIG. 3

FIG. 4

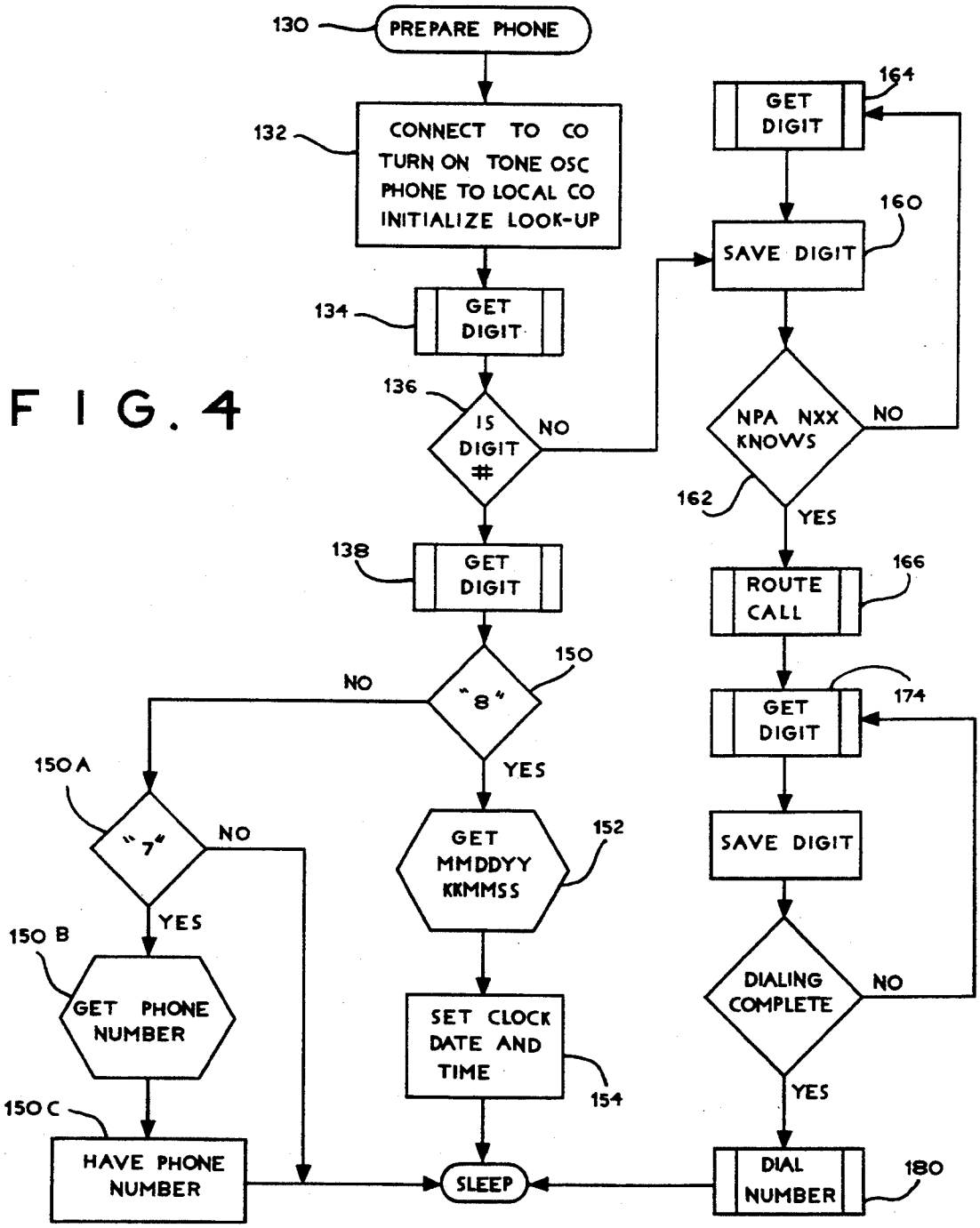
130
PREPARE PHONE
132
CONNECT TO CO
TURN ON TONE OSC
PHONE TO LOCAL CO
INITIALIZE LOOK-UP
134
GET DIGIT
136
IS DIGIT #
NO
138
GET DIGIT
150
"8"
NO
YES
150A
"7"
NO
YES
150 B
GET PHONE NUMBER
150 C
HAVE PHONE NUMBER
152
GET MMDDYY KKMMSS
SET CLOCK DATE AND TIME
154
SLEEP
164
GET DIGIT
160
SAVE DIGIT
NPA NXX KNOWS
NO
162
YES
166
ROUTE CALL
174
GET DIGIT
SAVE DIGIT
DIALING COMPLETE
NO
YES
DIAL NUMBER
180

FIG. 4A

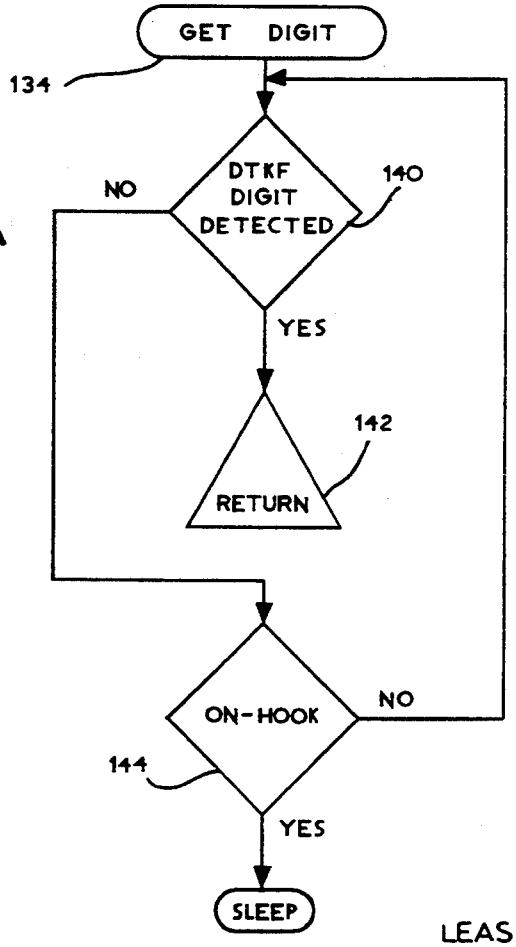
GET DIGIT
134
DTKF DIGIT DETECTED
140
NO
YES
142
RETURN
ON-HOOK
NO
144
YES
SLEEP

FIG. 6

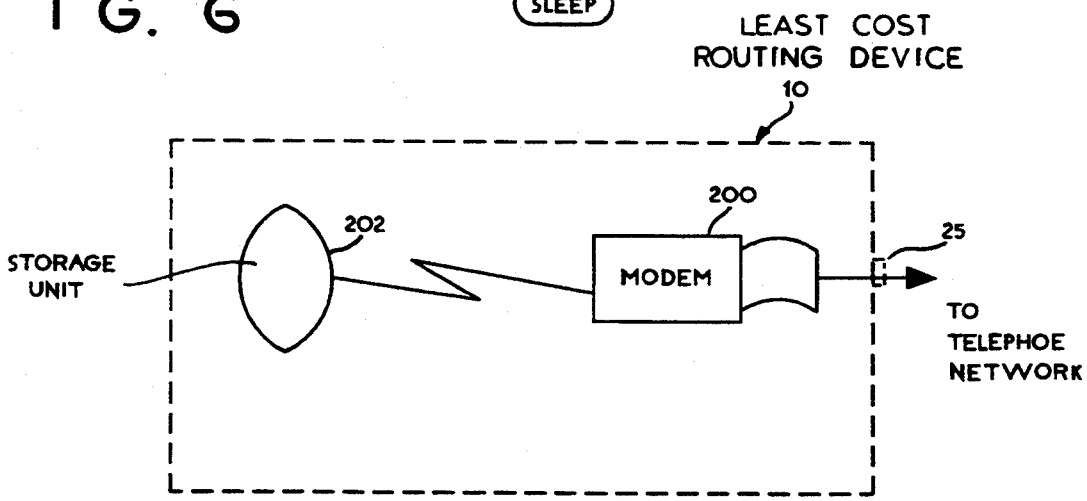
LEAST COST ROUTING DEVICE
10
200
202
25
STORAGE UNIT
MODEM
TO TELEPHOE NETWORK

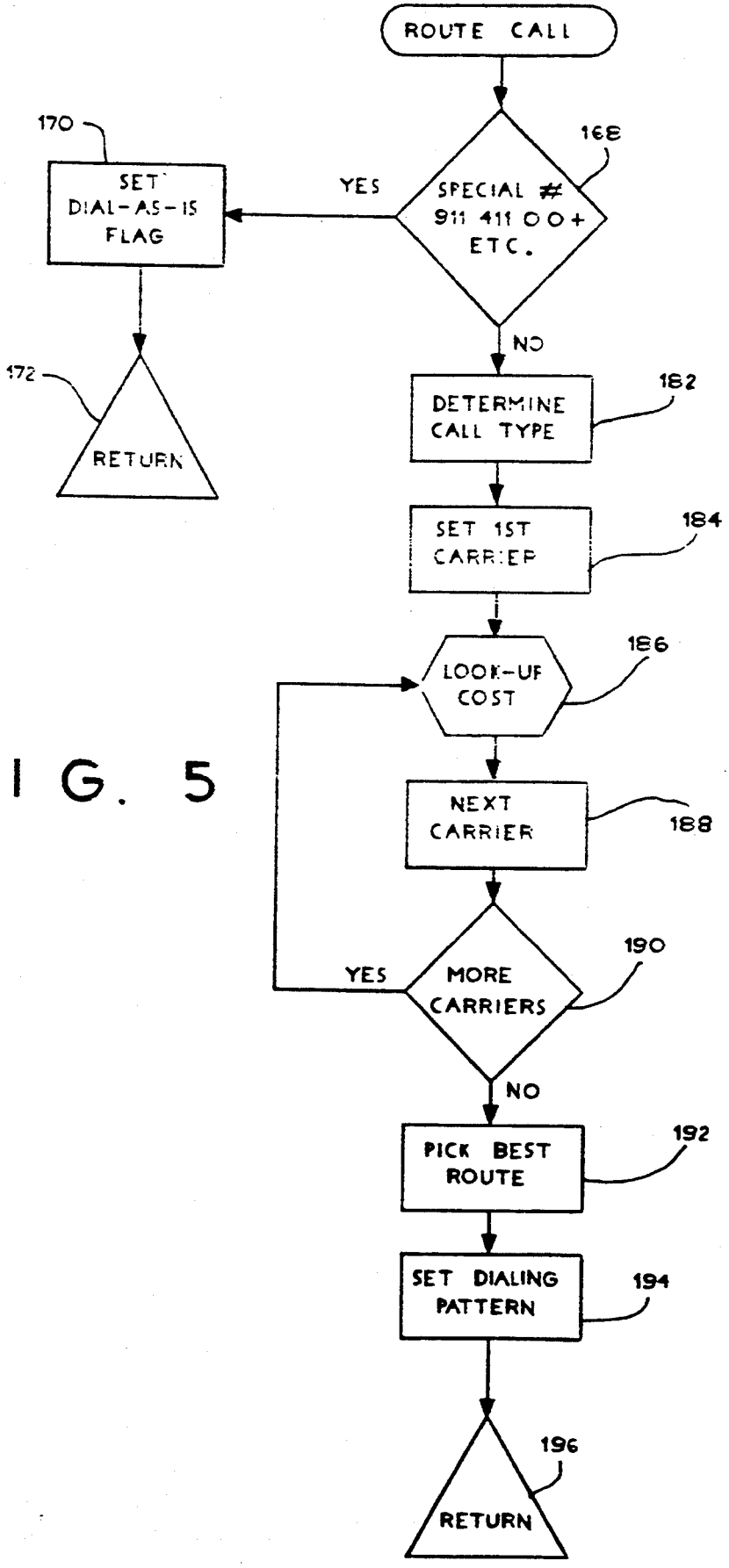
ROUTE CALL
168
SPECIAL # 911 411 00+ ETC.
YES
170
SET DIAL-AS-IS FLAG
172
RETURN
NO
182
DETERMINE CALL TYPE
184
SET 1ST CARRIER
186
LOOK-UP COST
188
NEXT CARRIER
190
MORE CARRIERS
YES
NO
192
PICK BEST ROUTE
194
SET DIALING PATTERN
196
RETURN

FIG. 5

LEAST COST ROUTING DEVICE FOR SEPARATE CONNECTION INTO PHONE LINE

FIELD OF THE INVENTION

This invention relates to a device which can be connected directly into the phone line for routing phone calls made from a first phone along the least cost path of the telephone network to a second phone.

BACKGROUND OF THE INVENTION

The advent of numerous local and long distance telephone carriers has resulted in a wide selection of different carriers which have different telephone cost rates depending on the time of day, the number of phone calls, the location of a calling party and other factors. Typically, a consumer chooses one carrier, and maintains that carrier account for all long distance calling needs, and in some instances for local calls also. With increased competition among interstate, intrastate, interlata and intralata phone carriers, a caller could save money if different carriers are chosen for each particular phone call to a particular destination.

It has been known to design complex phones that route calls along selected switching points via selected tie lines to establish a least cost route. For example, U.S. Pat. No. 4,122,308 to Weinberger et al. discloses such a device. It has been found, however, that many consumers are unwilling to purchase a complex telephone device in substitution for the phone already used in the home. Typically, consumers buy a phone for aesthetic or economic reasons. Consumers have been found unwilling to purchase complex phone equipment in lieu of phones already purchased which are more simple, smaller and aesthetically pleasing to the eye.

SUMMARY OF THE INVENTION

One of the features of the present invention is a device that may be connected within the phone line separate and apart from the telephone and which routes telephone calls along a least cost route originating from a first telephone through the telephone network to a second telephone.

Another feature of the present invention is a device that can be connected directly within the telephone line originating from a first telephone and can be hidden from view such as behind a furniture piece.

Another feature of the invention is a device for routing telephone calls along a least cost route that can be quickly attached and detached from the telephone line such as by telephone jacks.

In accordance with the present invention, the device routes telephone calls along a least cost route originating from the first telephone through the telephone network to a second telephone. As is conventional, the network has a plurality of alternate communication switch paths corresponding to different carriers which can be chosen to route the call.

A housing forms an enclosure and has jacks mounted on the housing for interconnection to the phone line. A first jack interconnects to the phone side of the phone line and a second jack interconnects to the network side of the phone line. The device components are contained in the enclosure and includes a switch which operatively connects to the first jack for disconnecting the first phone from the network. A current source is generated through the switch to the first phone and corresponds to the current provided by the phone network at

the central office. A database stores billing rate parameters for determining a least cost communication path based on the least cost routing parameters, which could include such parameters as the time and date of the call.

Means is operatively connected to the switch for detecting and storing a dialed phone number originating from the first phone. The database is addressed for identifying a plurality of communication switch paths to the dialed number as well as the cost rate of each path. The cost rate of each path is compared to determine a least cost route for the call. A tone generator is connected to the switch means and the second jack and generates a number sequence corresponding to the desired carrier so that the dialed call is routed through the second jack and phone line to the selected communication carrier so as to establish a switched connection between the first and second phones.

When a call is incoming, the switch connects the first phone to the network. An internal power supply provides power to the current generating means. In one aspect of the invention, the means generating the number sequence is a dual tone multifrequency generator that generates the necessary tones to the central office for establishing the least cost route. The detecting means includes, but is not limited to a dual tone multifrequency detector for detecting tones sent by the first phone.

The housing may be a number of different configurations. In one embodiment it is substantially cylindrical with opposing ends. The first jack is positioned on one end and the second jack is positioned on the other end.

In another aspect of the invention, the database is updated with a current billing rate schedule. In one aspect of the invention the update means includes a circuit board mounted within the enclosure, and the database is contained on a removable chip positioned on the circuit board. The housing may include a removable cover for accessing the chip on the circuit board to replace it with an updated chip. In still another aspect of the invention, the device includes a modem for receiving signals through the telephone line and downloading updated information to the database.

In still another aspect of the invention, a display is mounted on the housing and visibly displays the time and date. The time and date display receives a predetermined dial sequence from the first phone corresponding to a predetermined date and time to be displayed. After receiving the predetermined dial sequence, the display time and date is changed based on the received signals. In some designs, the date and time display can also be changed manually.

DESCRIPTION OF THE DRAWINGS

The foregoing advantages and features of the present invention will be appreciated more fully from the following description, with reference to the accompanying drawings in which:

FIG. **1** is an environmental view showing the device in accordance with the present invention positioned behind a sofa in a household.

FIG. **2** is a block diagram of the overall circuit used in the device of the present invention.

FIG. **3** is a flow chart depicting the initializing of the device and flow of an incoming call to the phone.

FIG. **4** is a flow chart depicting the routine for changing the display and dialing the codes for least cost routing in accordance with the present invention.

FIG. 4A is a flow chart illustrating the routine for obtaining digits for a least cost route.

FIG. 5 is a flow chart of a subroutine in the flow chart of FIG. 4 showing a database look-up routine.

FIG. 6 is a block diagram of the device with a modem.

FIG. 7 is a isometric view of one design of the device showing a cover that has been removed for accessing the chip to update the database.

DETAILED DESCRIPTION OF THE INVENTION

Referring now to FIG. **1**, the device **10** of the present invention is shown connected or "plugged" into the phone line **12** of a first telephone **14** in the environment of a household **15** and positioned out of sight behind a sofa **16**. As evident, the device of the present invention is advantageous because it can be readily connected within the phone line **12** and hidden from view without purchasing a new phone. Many consumers select phones based on aesthetic and economic reasons, and some consumers are unwilling to spend large sums for complex and unwieldy phones.

As shown in FIGS. **1** and **7**, the device **10** includes a housing **20** which forms an enclosure **22**. In the illustrated embodiment, the housing **20** is cylindrically configured with two opposing ends **20***a*, **20***b*. Although the cylindrical configuration is illustrated, any configuration can be used depending on the designer's choice and purchaser's desire. It is even possible to design the device **10** to be an ornament that can rest on a table or other readily visible place. A cylindrical configuration for the housing **20** has been found easy to mold and relatively inexpensive. AS shown in the drawings, the housing includes a first jack **24** for connecting "plugging" to the phone side of the phone line **12** and a second jack **25** for connection or "plugging" to the network side of the phone line.

The electronic components forming the device **10** are mounted within the enclosure, typically on a circuit board as shown in FIG. **7**. The housing can be designed with a removable cover **26** (FIG. **7**) to access the components, or a removable end where the circuit board can be slid outward to access any components.

Referring now to FIG. **2**, the basic components used in the device of the present invention are shown in the block diagram. As noted before, the second phone jack **25** has one line **32** connecting to the first phone jack **24** positioned on the other end of the cylindrically configured housing. The phone jack **25** connects to a switch **36**, referred to as a **2** Form C switch, which switches the phone off the network to the other components contained in the device. The switch **36** connects to a "local CO (central office)" current source **38** which generates a current corresponding to the current supplied by the central office of the network. The switch **36** connects and disconnects the phone from the network into the current source **38**, which in turn supplies a current to the phone equivalent to the current supplied by the central office of the network. The switch **36** also connects to a line current detector **40** (off-hook detector) which detects an off-hook or on-hook state of the phone. A combination polarity guard **42** and Direct Access Arrangement **44** (DAA) interfaces and allows communication to the network. The line current detector can be formed from numerous types and brands of device. One available device is a teltone M949 device.

The controller for the device **10** includes the standard components of a microprocessor including a microprocessing unit **50** (MPU) such as a Toshiba TMPZ 84C011 and a RAM chip **52** such as a generic chip sold by Hyundai under the designation HY6116. A bank selected Eprom **54** for storing the database is also included and can be a generic Eprom chip such as a Toshiba TC574000 chip with more Eprom than the microprocessor can directly address. A real time clock **56** maintains the proper time and provides signals for controlling the device. An example of a clock chip which can be used for the device is an Epsom RTC62421B chip. The microprocessing unit **50** includes the conventional address, control, and data buses **60**, **62**, **64** and an input output bus **66**.

A serial bus **68** connects from the MPU **50** to a display controller **70** which controls a 3½ digit display **72**. The 3½ digit display **72** displays the time and date and is positioned on the outside of the housing where it can be readily read. A ring detect circuit **74** is interconnected to the input-output bus and the incoming line jack **30** and detects the ringing of the phone. A power supply **76** is also included and provides the current for the local CO current generator **38**. In the present invention, power can be generated from the phone company when the first phone is "off-hook", or generated from the battery when the first phone is "on-hook".

Once a minute the device will update the date and time on the display **72** and then revert to a passive state also known as the "sleep" state. It is not possible to draw power for the device **10** from the phone company in an "on-hook" condition. Therefore, the power supply **76** provides power once a minute to change the display **72** to a new setting. A DTMF (dual tone multifrequency) tone generator **80** includes a crystal oscillator **82** which together generate the tone frequencies necessary to generate the tones for the dialing sequences. An analog switch **84** allows switching to either the-phone or the network. The dial tone detect circuit **86** connects to the line coming from the polarity guard **42** and connects to the line detector **40**. The DTMF tone detector **88** detects the tones generated from the first phone. The reset circuit **89** allows for resetting the entire circuit from a begin point.

Referring now to FIGS. **3–5**, there are illustrated flow charts depicting the operation of the device in accordance with the present invention. The steps are enumerated beginning with the numeral **100** and follow through with sequential even numbers in most cases.

Initially, as shown in FIG. **3**, in step **100** the device detects an "off-hook" condition for the first phone, such as when the handle is raised from the cradle of a phone. The device is initialized in step **102** and the clock reset is disabled. The initializing step **102** can also occur when the reset occurs such as a startup in step **104**. Thus, it is evident that a reset occurs in two conditions: 1) when the phone goes "off hook" or 2) when the real time clock emits a pulse (such as once a second) for setting the clock.

In step **106** the ring detect circuit **74** detects if there is a ring. If a ring is detected, the word "USE" in step **108** is displayed on the 3½ digit display **72** corresponding to the device **10** being in use. The phone remains connected by the switch **36** to the central office network and the DTMF tone oscillator and generator **80**, **82** operation are terminated. The power is shut down in step **12** of the device to allow communication between the first phone and the second phone, who was the

calling party in this instance. The device **10** has gone into a passive mode also referred to as a "sleep mode" in step **14**.

If during initialization in step **106** the ring detector did not detect a ring, the device **10** then checks for an off-hook condition in step **16**. If there is no off-hook condition, then the device is restarting such as from a clock pulse. The clock count is incremented in step **118**. If the clock count is greater than 60 seconds in step **120**, then the display controller **70** displays a new date and time on the 3½ digit display **72** in step **122**. If the count is not greater than 60 seconds then the phone remains connected to the central office (phone network) in step **110** and the phone has gone into a passive mode in step **112**.

If the off-hook condition is sensed in step **106**, the phone is prepared in step **130**, i.e., the device is prepared to receive DTMF tone signals from the first phone (FIG. **4**). In this step the device **60** connects to the central office (phone network) in step **132** and the DTMF tone generator **80**, **82** is set to the "on" position. The first phone is connected via the switch **36** to the local central office, i.e., the local current source **38**, to generate a current through the switch to the jack **34** and to the first phone. Additionally, in step **132**, the device is initialized to begin the lookup routines in the database.

The caller at the first phone then dials a number and the device **10** enters a subroutine known as "get digit" in step **134** (FIG. **4A**). The DTMF tone detector **88** detects each digit as it is called. If the digit is a "pound sign" ("#") in step **136**, then the device is initialized to prepare the date and time on the display **72**. Although the "pound sign" is illustrated as the initial sequence code for settling the time and date, it is readily apparent that any sequence of codes can be used as long as the code is not the beginning of a telephone number.

If the digit is a "pound sign", the "get digit" subroutine is followed once again in step **138**. The "get digit" subroutine is shown in greater detail on the left side of FIG. **4**. A DTMF digit is detected in step **140** and the routine then returns in step **142** to the mainflow chart. If the digit is not detected, a test is made to see whether the first phone current is on hook in step **144**. If the first phone is not on hook the subroutine continues to detect digits. If the first phone is on hook, then the device goes into "sleep" or passive mode.

If the numeral **3** is detected in step **150**, corresponding to the letter D, then the DTMF tones following are input as the date, such as the month, day and year, as well as the time, such as the hour, minute and seconds in that order in step **152**, and displayed on the 3½ digit display in step **154**. The device then routes into the passive "sleep" mode. If the numeral "**3**" was not detected in step **150** the device then routes into the sleep mode, or could implement other special functions indicated by the digit, e.g. (test modes). For example, if the number "**7**" is detected (step **150A**) for the phone, corresponding to the letter "P", the telephone number for the device is obtained (step **150B**), and saved (step **150C**). Typically, this routine can be started by the caller pressing the pound (#) key, and the number being stored as NPA NXX XXXX.

If the pound sign was not detected in step **136**, the detected digit is saved in step **160** and the detected digits are then analyzed in step **12** to determine if the area code and exchange (the NPA NXX) are known in step **12**. If they are not known, the get "digit routine" is repeated in step **14** until the NPA NXX code is known. The call is then routed in step **16** in a route call routine, which is set forth in FIG. **5**. The device distinguishes from the dialed digit if an area code (NPA) has been dialed. If the NPA has not been dialed, this device uses the NPA from the data specified for the device location.

As shown in FIG. **5**, the device **10** initially determines whether the area code and exchange digits known are in a special category in step **168** such as 911, 411, 800, or 900 numbers. If the dial routine is a special number, the telephone signal is flagged in step **170** and returned to the main routine where further digits such as the last four digits of the phone number are obtained and received in step **174**. The digits are saved in step **176** and the dialing is completed in step **178**. The number is then dialed in step **180** and the device routes into the passive or sleep mode and the call completed. If the dialing is not complete, then the get digit routine is repeated until all digits from the telephone number are obtained.

If the number in step **168** is not a special number (FIG. **5**), the call type is determined in step **182**, e.g. if the call is local, interlata, intralata, interstate, intrastate or a combination thereof. In step **284** the first carrier is set and the cost is looked up in the database in step **186**. The next carrier is then set in step **188**. If there are more couriers in step **190**, the look up cost is repeated until all carriers are exhausted. In step **192** the best carrier is picked and the dialing pattern set in step **194**. The sequence is then returned in step **196** to the route call routine of step **166**.

Because the rates among different carrier may change monthly, or even daily and weekly depending on circumstances, the database may be updated. In one embodiment, the database can be downloaded through a modem **200** (FIG. **6**) to a storage unit **202**. However, this method will require additional components such as a modem.

In another embodiment, the Eprom chip containing the database is removed, such as by accessing the chip through an opening **210**. Once the chip is removed-,another updated chip is substituted and the housing cover **26** replaced on the device **10**. In an alternative embodiment, an end can be removed, and the entire circuit board **220** holding the components slid outwardly to expose the chips to be replaced. Once any chips are replaced, the circuit board can be slid back into the housing.

The device **10** of the present invention is advantageous over prior art call metering devices that are incorporated within the phone itself. The device of the present invention can be connected into the phone line coming from a phone and easily hidden from view or placed in an inconspicuous location, and a consumer does not have to purchase anew phone. Basic microprocessor and other circuits are used and can be contained in an attractive housing, and the date and time can be easily set by the keypad of a standard telephone. Additionally, in some instances, the determined cost of a phone call may be given a bias for preference to a given carrier. For example, if a first carrier is no greater than 5% additional cost than a second carrier, that first carrier may be given a preference.

It is to be understood that the above description is only one embodiment of the invention. Numerous other arrangements may be devised by one skilled in the art without departing from the spirit and scope of the invention.

That which is claimed is:

1. A device for routing telephone calls along a least cost route originating from a first telephone to a second telephone having an associated telephone number via a network having a plurality of alternate communication switch paths corresponding to different carriers which can be chosen to route the call and normallyproviding a current to said first telephone when said first telephone is in use, comprising

a housing forming an enclosure and comprising first jack means for connection to said first telephone and second jack means for connection to said network

switch means operatively connected to said first jack means for disconnecting said first telephone from said network,

means operatively connected to said switch means for generating a current through said switch means to the first telephone, corresponding to a current provided by said network,

database means for storing billing rate parameters for determining a least cost communication path for call corresponding to said telephone number,

means operatively connected to said switch means for detecting and storing said telephone number originating from the first telephone,

means for addressing said database means for identifying a plurality of communication switch paths to said second telephone and the cost rate of each path,

means for comparing the cost rate of each path so as to determine a least cost route, and

means operatively connected to said switch means and said second jack means for generating a number sequence corresponding to a desired carrier so that said call is routed through said second jack means to the selected communication path and carrier to establish a switched connection between said first telephone and said second telephone phone.

2. The device according to claim 1 wherein said least cost communication path parameters include the time and date of the call.

3. The device according to claim 1 wherein said switch means connects said first telephone to said network during an incoming call.

4. The device according to claim 1 including an internal power supply connected to said means for generating a current.

5. The device according to claim 1 wherein said means for generating said number sequence comprises a dual tone multifrequency generator.

6. The device according to claim 1 wherein said housing is substantially cylindrical with opposing ends, wherein said first jack means is positioned on one end and said second jack means is positioned on the opposite end.

7. The device according to claim 1 wherein said detecting means includes a dual tone multifrequency detector.

8. The device according to claim 1 including means for maintaining the time and date so as to determine the least cost route based on the time and date of the call.

9. The device according to claim 1 wherein said cost may be given a bias for preference to a given carrier.

10. The device according to claim 1 including means for updating said database means with a current billing rate schedule.

11. The device according to claim 10 wherein said update means includes a circuit board mounted inside said enclosure, and said database means comprises a removable chip on said circuit board, and means for accessing said removable chip from outside said housing.

12. The device according to claim 11 wherein said means for accessing said removable chip includes a removable cover on said housing for accessing said chip.

13. The device according to claim 10 wherein said update means includes a modem for receiving signals through said telephone line and downloading the update information.

14. A device for routing telephone calls along a least cost route originating from a first telephone to a second telephone having an associated telephone number via a network having a plurality of alternate communication switch paths corresponding to different carriers which can be chosen to route the call and normally providing a current to said first telephone when said first telephone is in use, comprising

a housing forming an enclosure and comprising first jack means for connection to said first telephone, and second jack means for connection to said network, means positioned on said housing for visibly displaying the time and date,

switch means operatively connected to said first jack means for disconnecting said first telephone from said network,

means operatively connected to said first jack means for disconnecting said first telephone from said network,

means operatively connected to said switch means for generating a current through said switch means to said first telephone corresponding to said current provided by said network,

means operatively connected to said time and date display means and said switch means for receiving a predetermined dial sequence from said first telephone corresponding to a predetermined date and time to be displayed and means for changing the displayed time and date based on the received signals,

database means for storing billing rate parameters for determining a least cost communication path for a call corresponding to said telephone number, based on such factors as the time and date of the call,

means operatively connected to said switch means for detecting and storing said telephone number originating from the first telephone,

means for addressing said database means for identifying a plurality of communication switch paths to said second telephone and the cost rate of each path,

means for comparing the cost rate of each path so as to determine a least cost route, and means operatively connected to said switch means and said second jack means for generating a number sequence corresponding to a desired carrier so that said call is routed through said second jack means to the selected communication path and carrier to establish a switched connection between said first telephone and said second telephone.

15. The device according to claim 14 including means positioned on said housing for manually changing the date and time of the display.

16. The device according to claim 14 wherein said means for generating said number sequence comprises a dual tone multifrequency generator.

17. The device according to claim **14** wherein said housing is substantially cylindrical with opposing ends, wherein said first jack means is positioned on one end and second jack means is positioned on the other end.

18. The device according to claim **14** wherein said detecting means includes a dual tone multifrequency detector.

19. The device according to claim **14** including means for updating said database means with a current billing rate schedule.

20. The device according to claim **19** wherein said update means includes a circuit board mounted inside said enclosure, and said database means comprises a removable chip on said circuit board, and means for accessing said removable chip from outside said housing.

21. The device according to claim **20** wherein said means for accessing said removable chip includes a removable cover on said housing for accessing said chip.

22. The device according to claim **19** wherein said update means includes a modem for receiving signals through said telephone line and downloading the update information.

23. The device according to claim **14** wherein said cost may be given a bias for preference to a given carrier.

24. An apparatus for displaying a time quantity which can be initiated from a telephone of the type capable of generating dual tone multifrequency signals comprising

a housing forming an enclosure and comprising first jack means for interconnection to said telephone, and second jack means for connection to a telephone switching network, said network normally providing a current to said telephone when said telephone is in use, means positioned on said housing for visibly displaying a time quantity,

switch means operatively connected to said first jack means for disconnecting said telephone from said network,

means operatively connected to said switch means for generating a current through said switch means to said telephone corresponding to said current provided by said network,

means operatively connected to said means for displaying a time quantity and said first jack means for receiving said dual tone multifrequency signals, from said telephone when said telephone is disconnected from said network, said signals corresponding to said time quantity and for changing the displayed time quantity based on signals from said telephone, and means responsive to a dialing sequence originating on said telephone and operatively connected to said switch means for connecting said telephone to said network.

25. The apparatus according to claim **24** wherein said time quantity is the time of day.

26. The apparatus according to claim **24** wherein said time quantity is the date.

* * * * *

UNITED STATES PATENT AND TRADEMARK OFFICE

CERTIFICATE OF CORRECTION

PATENT NO. : 5,425,085

DATED : June 13, 1995

INVENTOR(S) : Gerald J. Weinberger, et al.

It is certified that error appears in the above-identified patent and that said Letters Patent is hereby corrected as shown below:

Col. 8, line 29-31, please delete "means operatively connected to said first jack means for disconnecting said first telephone from said network,".

Signed and Sealed this

Seventh Day of November, 1995

Attest:

BRUCE LEHMAN

Attesting Officer

Commissioner of Patents and Trademarks

US005425085B1

(12) REEXAMINATION CERTIFICATE (4452nd)

United States Patent

Weinberger et al.

(10) Number: US 5,425,085 C1

(45) Certificate Issued: Oct. 9, 2001

(54) **LEAST CONTROL ROUTING DEVICE FOR SEPARATE CONNECTION INTO PHONE LINE**

(75) Inventors: **Gerald J. Weinberger**, Smithtown; **Roger C. Lee**, Wading River, both of NY (US)

(73) Assignee: **Rates Technology Inc.**, Smithtown, NY (US)

Reexamination Request:
No. 90/005,472, Aug. 31, 1999

Reexamination Certificate for:

Patent No.:	**5,425,085**
Issued:	**Jun. 13, 1995**
Appl. No.:	**08/210,670**
Filed:	**Mar. 18, 1994**

Certificate of Correction issued Nov. 7, 1995.

(51) **Int. Cl.**[7] **H04M 15/00**; H04M 7/00

(52) **U.S. Cl.** **379/112**; 379/111; 379/113; 379/114; 379/116; 379/130; 379/131; 379/219; 379/220; 379/221

(58) **Field of Search** 379/111, 112, 379/113, 114, 115, 116, 130, 131, 132, 219, 220, 221

(56) **References Cited**

U.S. PATENT DOCUMENTS

5,161,109		11/1992	Keating et al.	364/464.02
5,212,789		5/1993	Rago	395/600
5,400,395	*	3/1995	Berenato	379/114
5,420,914	*	5/1995	Blumhardt	379/115
5,473,630		12/1995	Penzias et al.	375/114
5,515,425		5/1996	Penzias et al.	379/114
5,799,071		8/1998	Azar et al.	379/113

FOREIGN PATENT DOCUMENTS

0 586 157 A2	3/1994	(EP)	G06F/15/403

OTHER PUBLICATIONS

Communiqué Telecommunications, Inc. (Ontario, California), "Customized Telemiser Selects Low–Cost Routing," *Computerworld*, vol. XVIII, No. 48, Nov. 28, 1983, p. 109 (plus cover page and contents page).

Communiqué Telecommunications, Inc. (Ontario, California), "Least–Cost Router," *Telecommunications*, vol. 18, No. 1, Jan., 1984, p. 92 (plus cover page and contents page).

Communiqué Telecommunications, Inc. (Ontario, California), "How to Make the Least of Your Long Distance Phone Bill," *Communications News*, vol. 21, No. 9, Sep. 1984, p. 171 (plus cover page).

Communiqué Telecommunications, Inc. (Ontario, California), "How to Make the Least of Your Long Distance Phone Bill," *Sports Illustrated*, Oct. 1, 1984, p. 113 (plus cover page).

CALLMISER Trademark File History (Registration No. 1725288; Registration Date Oct. 20, 1992; International Class 9).

* cited by examiner

Primary Examiner—Vijay Shankar

(57) **ABSTRACT**

A device interconnects within the phone line coming from a first phone and routes telephone calls along a least cost route originating from the first telephone to a second telephone via the network. A housing forms an enclosure and has a first jack for interconnection to the phone side of the phone line and a second jack for interconnection to the network side of the phone line. The housing forms an enclosure which includes a switch for disconnecting the first phone from the network. The device generates a source of current through the switch to the first phone corresponding to the amount of current provided by the phone network. A database stores billing rate parameters for determining various communication paths of different carriers based on parameters such as the time and date of the call. Phone calls from the first phone are detected and stored. The database is addressed and a plurality of communication switch paths are identified as well as the cost rate of each path. The cost rates for each identified path are compared to determine a least cost route for the call. The device generates a number sequence corresponding to a desired carrier so that the dialed call is routed through the second jack and phone line to the selected communication path and carrier so as to establish a switched connection between the first and second phones.

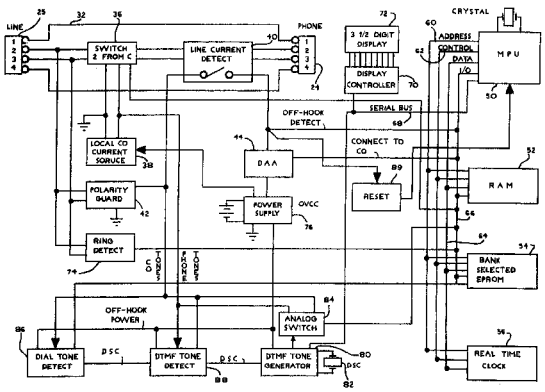

REEXAMINATION CERTIFICATE ISSUED UNDER 35 U.S.C. 307

NO AMENDMENTS HAVE BEEN MADE TO THE PATENT

AS A RESULT OF REEXAMINATION, IT HAS BEEN DETERMINED THAT:

The patentability of claims **1–26** is confirmed.

* * * * *

Exhibit H

Civil Action No. 1:07-cv-00442-JJF

US005519769A

United States Patent [19]

Weinberger et al.

[11] **Patent Number: 5,519,769**

[45] **Date of Patent: May 21, 1996**

[54] **METHOD AND SYSTEM FOR UPDATING A CALL RATING DATABASE**

[75] Inventors: **Gerald J. Weinberger**, Smithtown; **Roger C. Lee**, Wading River, both of N.Y.

[73] Assignee: **Rates Technology Inc.**, Smithtown, N.Y.

[21] Appl. No.: **223,082**

[22] Filed: **Apr. 4, 1994**

[51] **Int. Cl.**[6] **H04M 15/00**

[52] **U.S. Cl.** **379/112**; 379/111; 379/113; 379/114; 379/115; 379/130; 379/131; 379/132

[58] **Field of Search** 379/111, 112, 379/113, 114, 115, 116, 130, 131, 132, 88, 104, 105, 106

[56] **References Cited**

U.S. PATENT DOCUMENTS

4,104,486	8/1978	Martin	379/106
4,122,308	10/1978	Weinberger	379/114
4,136,262	1/1979	Clark, Jr.	179/6.3
4,198,545	4/1980	Haist et al.	179/6.3
4,209,668	6/1980	Weinberger et al.	179/90
4,226,360	10/1980	Simjian	379/106
4,410,765	10/1983	Hestad	379/112
4,439,636	3/1984	Newkirk	379/91
4,521,857	6/1985	Reynolds	379/88
4,585,904	4/1986	Mincone	379/131
4,656,657	4/1987	Hunsicker	379/131
4,751,728	6/1988	Treat	379/114
4,813,065	3/1989	Segala	379/116
4,888,822	12/1989	Weinberger et al.	379/130
4,935,956	6/1990	Hellwarth	379/112
5,003,584	3/1991	Benyacar	379/135
5,187,710	2/1993	Chau	379/114
5,319,701	6/1994	Hird et al.	379/132

Primary Examiner—Stephen Chin
Assistant Examiner—Vijay Shankar
Attorney, Agent, or Firm—James & Franklin; Harold James; Robert L. Epstein

[57] **ABSTRACT**

A method and system for updating a database stores billing rate parameters for call rating devices associated with a calling station. The calling station calls at a predetermined date and time a rate provider, which includes billing rate parameters for a plurality of calling stations. The call rating device transmits over the telephone network to the rate provider the phone number of the calling station, and the date and time of the last updated database. The rate provider verifies that the billing rate parameters of the calling station should be updated, then transmits back over the telephone network to the calling station the updated database. The rate provider also sends data as to the new date and time for the call rating device to place a call to the rate provider.

48 Claims, 7 Drawing Sheets

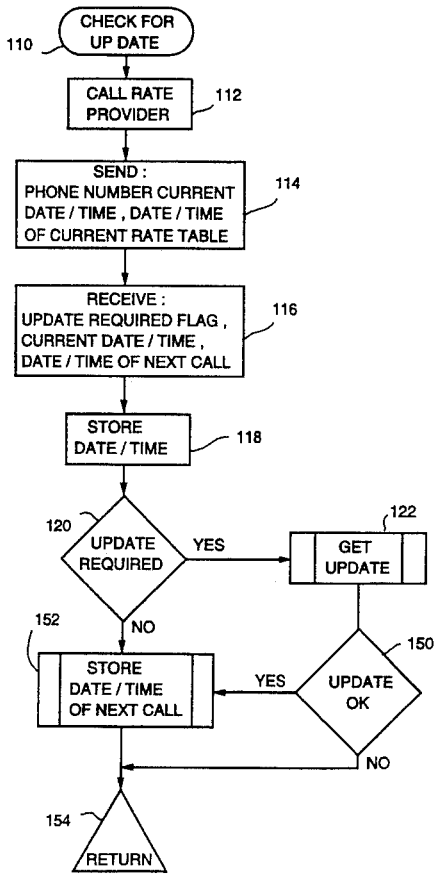

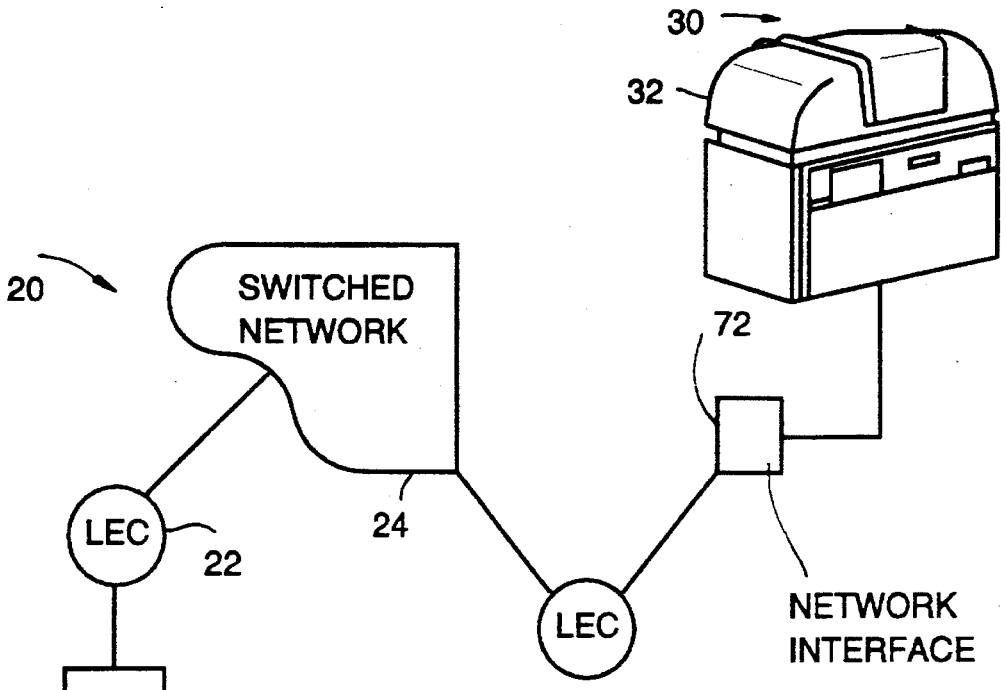
30
32
20
SWITCHED NETWORK
72
LEC
22
24
LEC
NETWORK INTERFACE

FIG 1

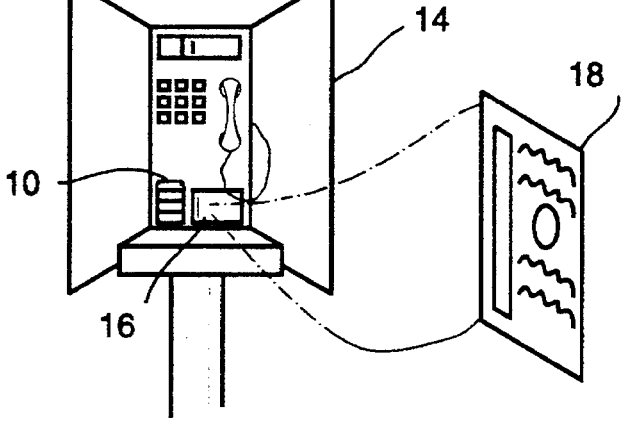
TELEPHONE
14
18
10
16

FIG 3

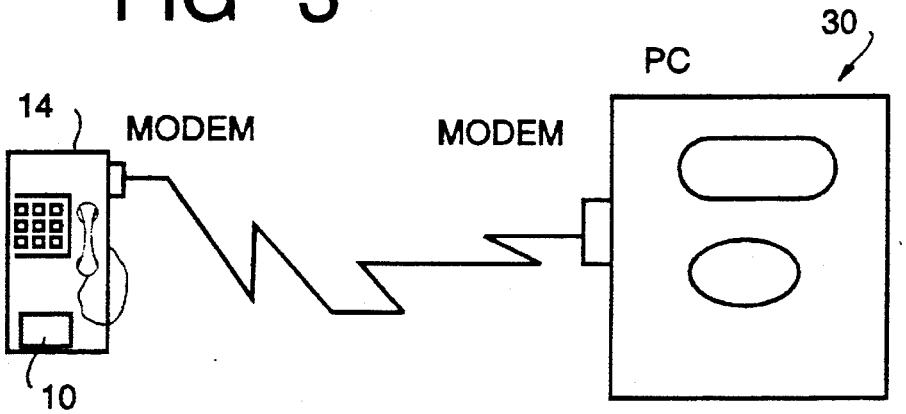
30
PC
14
MODEM
MODEM
10

FIG 2

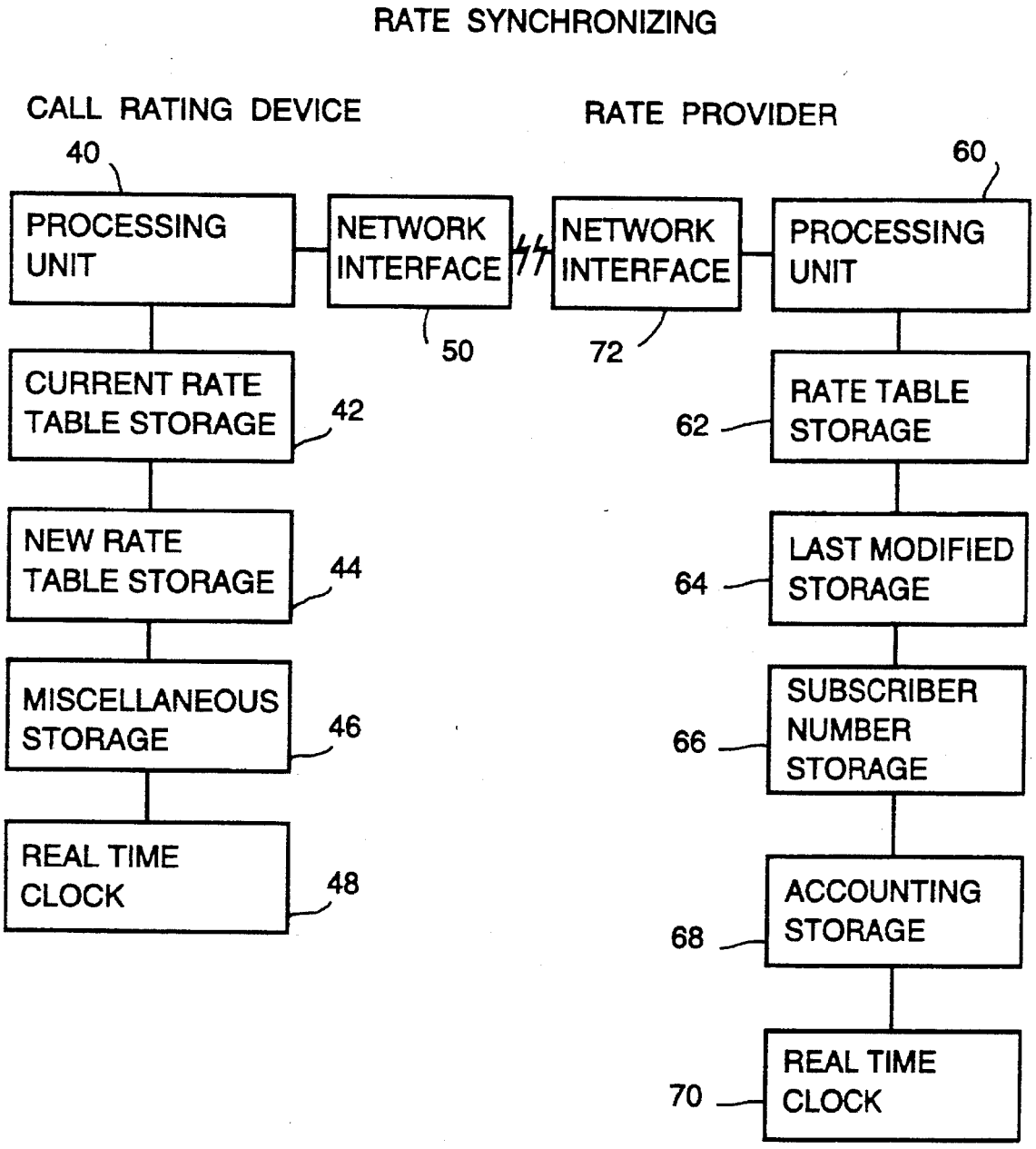
RATE SYNCHRONIZING
CALL RATING DEVICE
RATE PROVIDER
40
60
PROCESSING UNIT
NETWORK INTERFACE
77
NETWORK INTERFACE
PROCESSING UNIT
50
72
CURRENT RATE TABLE STORAGE
42
RATE TABLE STORAGE
62
NEW RATE TABLE STORAGE
44
LAST MODIFIED STORAGE
64
MISCELLANEOUS STORAGE
46
SUBSCRIBER NUMBER STORAGE
66
REAL TIME CLOCK
48
ACCOUNTING STORAGE
68
REAL TIME CLOCK
70

FIG 4

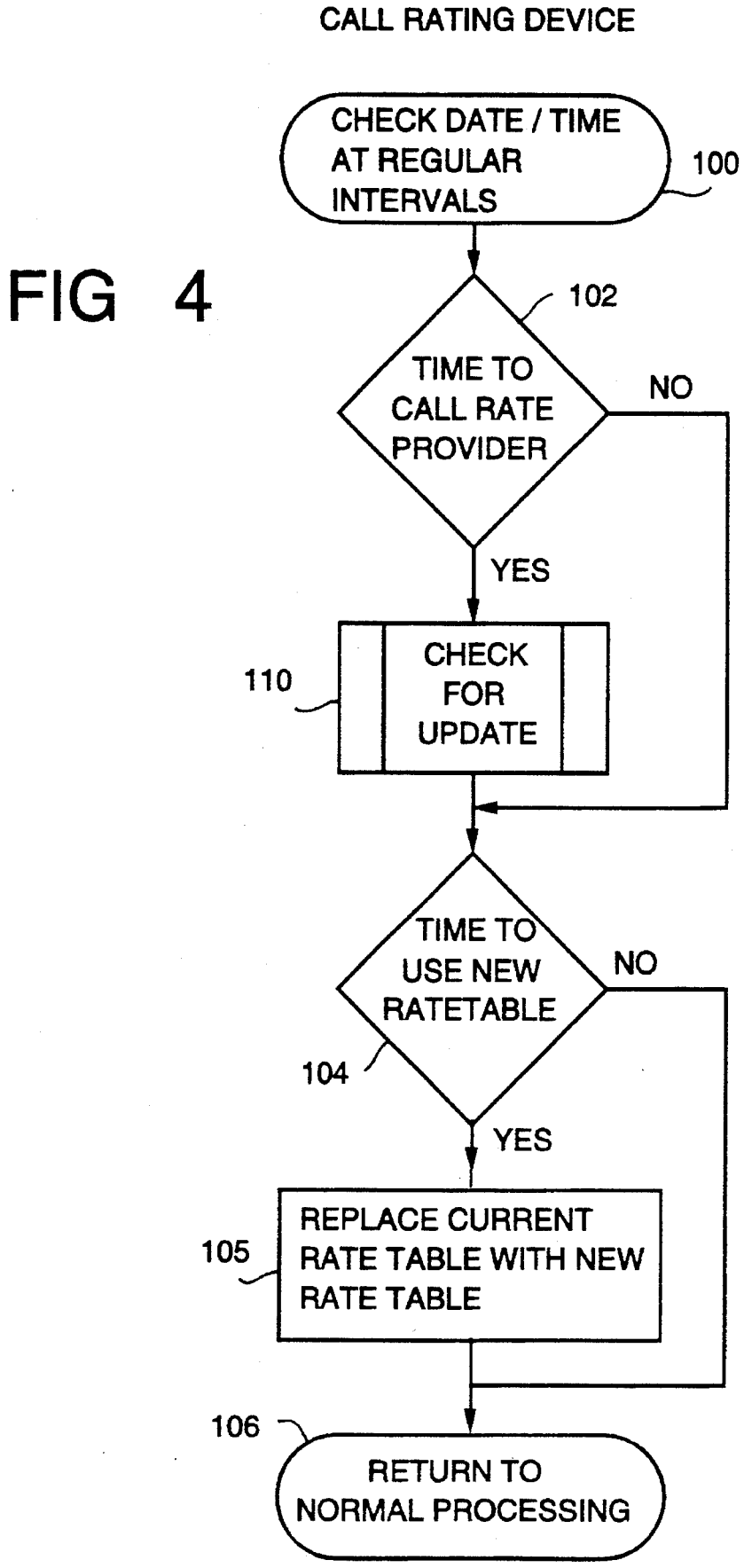
CALL RATING DEVICE
CHECK DATE / TIME AT REGULAR INTERVALS
100
102
TIME TO CALL RATE PROVIDER
NO
YES
110
CHECK FOR UPDATE
TIME TO USE NEW RATETABLE
NO
104
YES
105
REPLACE CURRENT RATE TABLE WITH NEW RATE TABLE
106
RETURN TO NORMAL PROCESSING

FIG 5

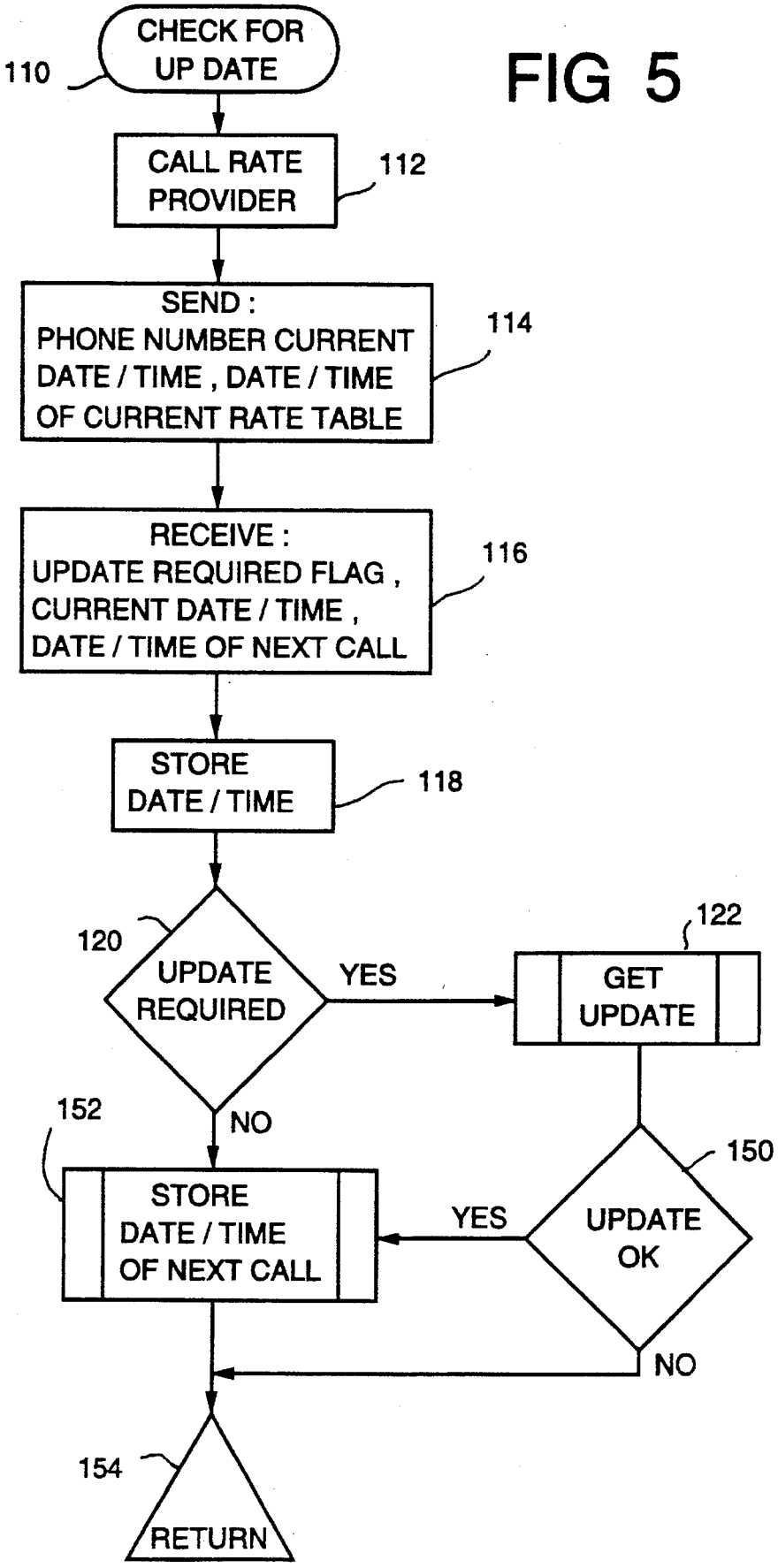
CHECK FOR UP DATE
110
CALL RATE PROVIDER
112
SEND : PHONE NUMBER CURRENT DATE / TIME , DATE / TIME OF CURRENT RATE TABLE
114
RECEIVE : UPDATE REQUIRED FLAG , CURRENT DATE / TIME , DATE / TIME OF NEXT CALL
116
STORE DATE / TIME
118
120
UPDATE REQUIRED
YES
122
GET UPDATE
NO
152
STORE DATE / TIME OF NEXT CALL
YES
150
UPDATE OK
NO
154
RETURN

FIG 6

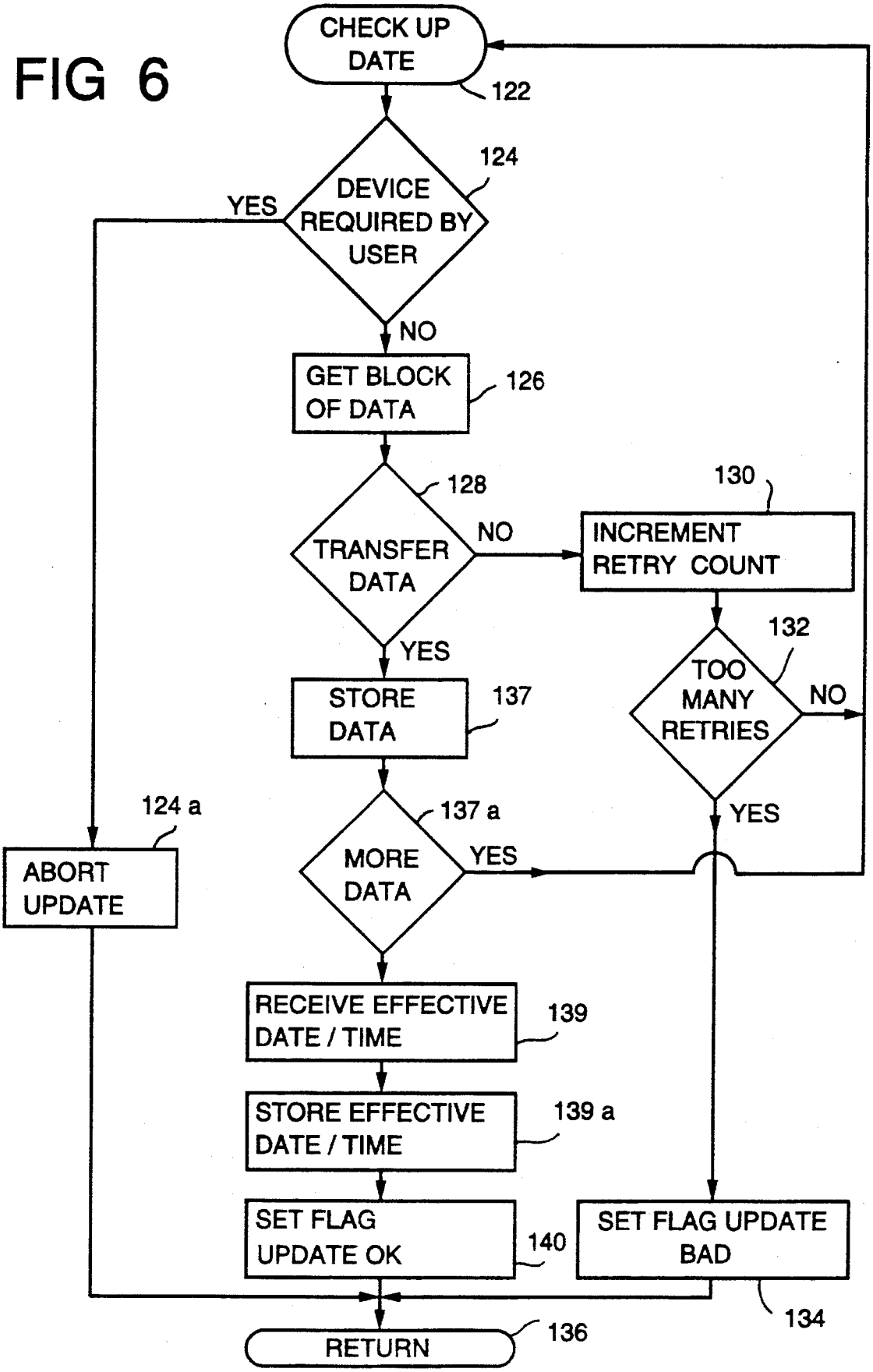
CHECK UP DATE
122
DEVICE REQUIRED BY USER
124
YES
NO
GET BLOCK OF DATA
126
TRANSFER DATA
128
NO
INCREMENT RETRY COUNT
130
YES
STORE DATA
137
TOO MANY RETRIES
132
NO
YES
MORE DATA
137 a
YES
ABORT UPDATE
124 a
RECEIVE EFFECTIVE DATE / TIME
139
STORE EFFECTIVE DATE / TIME
139 a
SET FLAG UPDATE OK
140
SET FLAG UPDATE BAD
134
RETURN
136

FIG 7

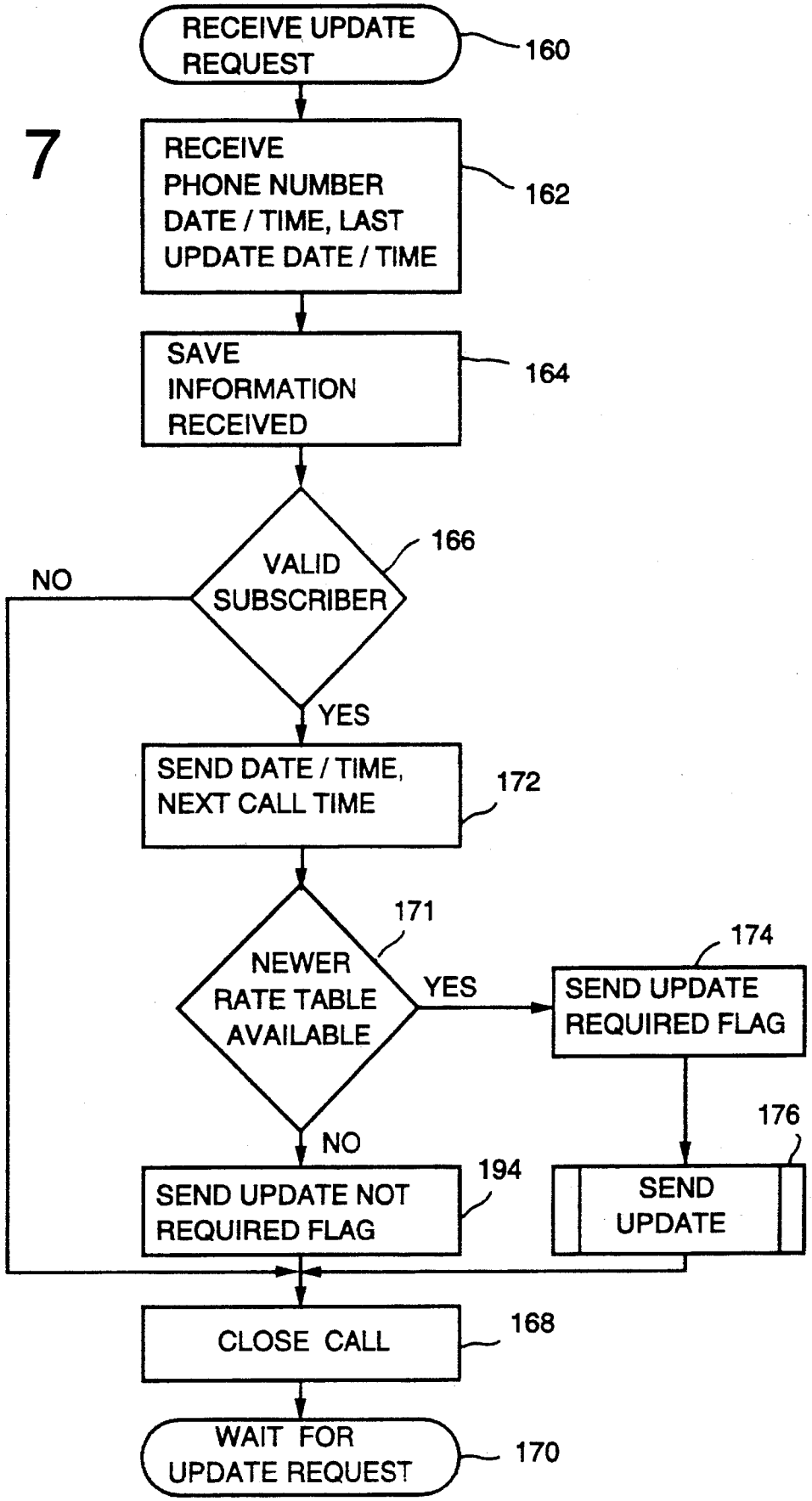
RECEIVE UPDATE REQUEST
160
RECEIVE PHONE NUMBER DATE / TIME, LAST UPDATE DATE / TIME
162
SAVE INFORMATION RECEIVED
164
VALID SUBSCRIBER
166
NO
YES
SEND DATE / TIME, NEXT CALL TIME
172
NEWER RATE TABLE AVAILABLE
171
YES
174
SEND UPDATE REQUIRED FLAG
176
NO
SEND UPDATE NOT REQUIRED FLAG
194
SEND UPDATE
CLOSE CALL
168
WAIT FOR UPDATE REQUEST
170

FIG 8

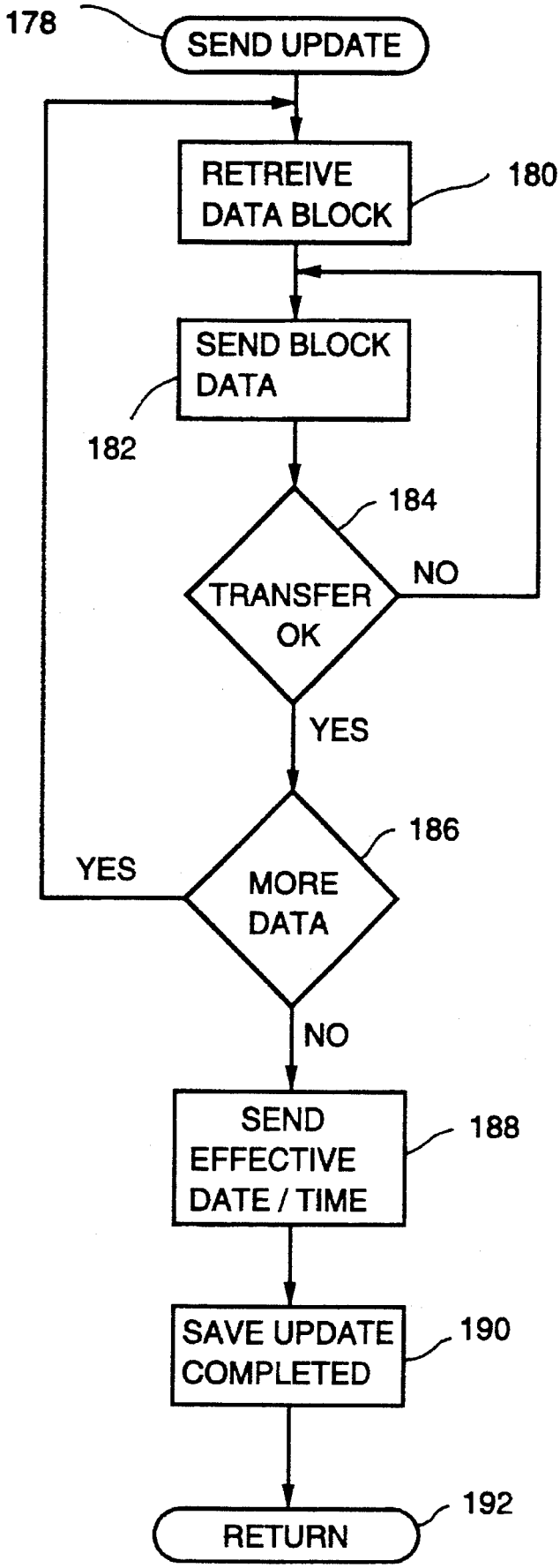
178
SEND UPDATE
RETREIVE DATA BLOCK
180
SEND BLOCK DATA
182
184
TRANSFER OK
NO
YES
186
MORE DATA
YES
NO
SEND EFFECTIVE DATE / TIME
188
SAVE UPDATE COMPLETED
190
RETURN
192

METHOD AND SYSTEM FOR UPDATING A CALL RATING DATABASE

FIELD OF THE INVENTION

This invention leads to a method and system for updating a database that stores billing rate parameters for a call rating device used in determining the cost of a telephone call.

BACKGROUND OF THE INVENTION

Competition among numerous local and long distance telephone carriers often results in many cost changes associated with placing both local and long distance telephone calls. Anticipated telephone services will probably include debit card calling from pay phones, as well sophisticated computer network hookup to the telephone network via pay telephones or other calling stations. In such circumstances, it is essential that any database storing a rate table used to cost such calls be accurate and current. The rates must be synchronized to current charges to maintain proper debiting of debit cards and cost charges on databases of cost accounting systems.

In copending patent application Ser. No. 08/210670, entitled "Least Cost Routing Device For Separate Connection Into Phone Line", filed Mar. 18, 1994, a device interconnects within the phone line of a first phone station such as in a residential household, and routes telephone calls along a least cost route originating from that telephone to a destination telephone via the telephone network. A database within the device stores billing rate parameters for determining various communication paths to different carriers based on parameters such as time and date of the call. A home purchaser of such device and service relies on the database to ensure that the least cost route is chosen. The database must be kept current, and updated with the latest rate changes, or the device's function does not consumer perform to expectations.

SUMMARY OF THE INVENTION

The advantages and features of the present invention now allows the database that stores billing rate parameters in a rate table for call rating devices to be updated. The call rating device is connected at a predetermined time and date via a data transfer line to a rate provider having billing rate parameters for a plurality of calling stations. Indicia identifying the call rating device and the date and time of the last update of the billing rate parameters is transmitted over the data transfer line to the rate provider. The rate provider verifies that the billing rate parameters should be updated, and it transmits to the call rating device the updated billing rate parameters when the rate provider determines that an update is required.

In one aspect of the invention, the data transfer line is a part of the telephone network. The call rating device is associated with a calling station and connects to the network via a modem. The rate provider includes a database stored in a personal computer, minicomputer or other similar device, which could connect to the network via a modem.

In one aspect of the invention, the data transfer between the call rating device and rate provider is terminated when the call rating device is used. Transfer of information should not interfere with the normal usage of the call rating device. This is advantageous such as when the call rating device is

incorporated within a pay telephone. If a customer desires to use the telephone, any pending rate transfer is terminated.

In another aspect of the invention, the call rating device stores the updated billing parameters in a separate database. When the telephone network switches to the new rates, the call rating device automatically substitutes the updated billing rate schedule into the old database. Typically, the rate provider sends the time and date when any call rating devices which are part of a rating network should call the rate provider to solicit rate information. The rate provider then sends a new billing rate schedule to respective call rating devices at different times. This is advantageous when many call rating devices are subscribers to the rate network. The rate provider will not be overloaded at one time with numerous "request for update" calls. During updating, the rate provider sends new times and dates when each respective call rating device should call for an updated database.

DESCRIPTION OF THE DRAWINGS

The foregoing advantages and features of the present invention will be appreciated more fully from the following description with reference to the accompanying drawings in which:

FIG. **1** is an environmental view showing the call rating device incorporated within a debit telephone connected via the telephone network to a rate provider in the form of a minicomputer.

FIG. **2** is a block diagram of the overall components of the call rating device and rate provider.

FIG. **3** is a block diagram showing basic components of a pay telephone and a call rating device in the form of a personal computer where modems connect to the telephone network.

FIG. **4** is a high level flow chart showing the basic processing for using and replacing a current rate table with a new rate table.

FIG. **5** is a flowchart showing the subroutine where the call rating device is checked for updates.

FIG. **6** is a flowchart showing the subroutine where the call rating device obtains the information from the rate provider.

FIG. **7** is a flowchart showing the routine where the rate provider receives an updated request from the call rating device.

FIG. **8** is a flowchart showing the routine where the rate provider sends an update to the call rating device.

DETAILED DESCRIPTION OF THE INVENTION

Referring now to FIG. **1**, there is illustrated the call rating device **10** of the present invention which is incorporated within a pay telephone **14**, which in the illustrated example is a debit telephone. Although the description proceeds in reference to the illustrated debit telephone **14**, it is understood that the call rating device **10** can be incorporated with the least cost rating device disclosed in U.S. patent application Ser. No. 08/210,670, entitled "Least Cost Routing Device For Separate Connection Into Phone Line, "filed", Mar. 18, 1994, the disclosure which is hereby incorporated by reference, and it can be incorporated with other telephones or personal computers connected to a LAN network.

In the illustrated embodiment, the debit telephone **14** includes a card slot **16** where a debit card **18** is inserted. The debit **18** card typically includes a dollar amount which will

be debited each minute as the phone is used. The phone includes an internal modem connection to allow data transfer along the phone network **20**. The phone network typically includes a central office **22** and a switched network **24**.

In the illustrated example, the rate provider **30** is a large capacity computer with a hard drive **32** for storing the rate information for various calling stations such as the debit telephone **14**. Although a minicomputer is illustrated as a rate provider, in smaller rate networks when not many subscribers use the system of the invention, a powerful personal computer will suffice.

In accordance with the present invention, the rate provider services numerous other subscribers to the updating service, and could include other debit telephones, household/residential telephones using plug devices as disclosed in the copending '670 application, or personal computers in cost management systems, LAN systems and other similar uses. The users form a rate network. Each user is a subscriber to the overall rate network. The billing rate parameters could include the rates for local and long distance calls, and the rates of various carriers in some instances.

As shown in FIG. **2**, the call rating device **10** would typically include a processing unit **40** such as a standard microprocessor unit. The current rate table storage **42** used for storing the billing rate parameters forming the rate table could be a static ram or any nonvolatile storage such as currently used with IBM Compatible PCs. An EEPROM has been found advantageous also. The new rate table storage **44** can be identical to the current rate table storage **42**, except that the new rate table storage will be substituted for the current rate table when an update is required. Miscellaneous storage **46** can also be static ram or other similar storage devices and will store such items as the phone number associated with the call rating device, the date and time in which to call the rate provider, as well as other miscellaneous information.

The amount of required storage capacity could be small, typically on the order of about 32K byte. Naturally, the amount of storage varies depending on the type of telephone or other device which is associated with the call rating device, and the end use of the device. The real time clock **48** maintains time over the processing unit and the movement of data between the various storage devices **42**, **44** and **46**. In the illustrated embodiment, the network interface for the call rating device is a modem which interfaces with the phone network. In some instances, however, the network interface could be associated with T1 lines and other communication paths.

The rate provider also includes a processing unit **60**. However, because of the larger database and processing demands placed upon the rate provider, the processing unit **60** typically is a larger unit such as associated with a minicomputer or high powered PC compatible computer. The rate table storage **62** can be a hard disc or any other type of large capacity data storage to keep track of all call rating device databases which subscribe to the rate network. The last modified storage **64** is a storage area where every modification to a database is stored to maintain a record of rate table modifications for each call rating device in the rate network.

The subscriber number storage **66** stores each telephone number associated with a call rating device, such as the telephone number associated with the debit telephone station illustrated in FIG. **1**. The transaction storage **68** maintains a record of which calling station has connected to the rate provider, and in conjunction with the processing unit **60**, verifies all transactions, tracks telephone numbers, and maintains records and information such as when respective call rating devices are scheduled to call the rate provider. A real time clock **70** properly synchronizes timing of the processing unit **60**. The rate provider also includes a network interface **72** such as a modem or (T1 lines in some instances) for communicating with the call rating device **10** via the phone network, or perhaps with leased modem or phone lines.

In accordance with the present invention, the call rating device may also communicate through a local area network, especially when the call rating device and rate provider are associated with personal computers. Two computers could be connected via a data transfer line and the call rating device updated. The personal computer associated with the call rating device could be used to input data to a private branch exchange or other similar exchange. Additionally, the call rating device could be associated with a call accounting system used with a LAN network.

In the illustrated aspect of the invention, the call rating device is associated with a calling station, the debit phone **14** of FIG. **1**, and connected by network interface **52** to the telephone network. The calling station at the appropriate predetermined time set by the rate provider calls a 900 number and connects to the rate provider. The calling station that calls the 900 number will automatically be billed, and the rate provider will obtain the funds back from the telephone company. Thus, the system can provide an automatic billing system, minimizing the amount of expensive and complex files that the rate provider would have to generate, such as those normally associated with "toll-free" 800 numbers.

FIG. **3** illustrates another block diagram where the debit phone is connected to a personal computer using modems for network interfaces.

Referring now to FIGS. **4–8**, there are illustrated flowcharts showing operation of the call rating device and the rate provider. In the description that follows, the call rating device is described with reference to the debit phone as illustrated in FIG. **1**. The rate provider is typically associated with a computer such as illustrated in FIG. **1**. The references for each block will be described starting from the numeral one hundred (**100**) and sequentially following with mainly even numbers.

As shown in FIG. **4**, in block **100**, the call rating device **10** at some frequent interval of time checks the date and time which are maintained by the real time clock **48**. Based on the data stored in miscellaneous storage **46**, the call rating device **10** in block **100** and **102** determines whether it is time to call the rate provider **30** to determine if an updated billing schedule is required. The frequency of calls made in block **100** and **102** can vary depending on the location of the call rating device and the type of associated equipment. If it is not time to call the rate provider, then the processor **40** checks to see whether it is time to use any new rate table (block **104**) which may be stored in the new rate table storage **44**. The rate table is replaced (block **105**) if changes are required. If changes to the new rate table (block **104**) are not required, the call rating device returns to normal processing (block **106**).

If it is time to call the rate provider, then the subroutine, "Check For Update " is followed (block **110**), and the rate provider is called (block **120**). Typically the modem is initialized and information is sent which includes: (1) the phone number associated with the calling station of the call rating device; (2) the current date and time; and (3) the date

and time when the current rate table was substituted for a previous autorate table or first used (block **114**).

The rate provider **30** receives the information sent by the call rating device **10**. An update flag is generated and signals the call rating device processor whether an update is required. The rate provider has the intelligent capability to determine when each call rating device associated with a calling station should make any calls so that the calls can be staggered. This is essential in a large network to prevent overloading the rate provider.

The block of information includes the current date and time and the date and time when the calling rating device should make the next call to the rate provider. In block **118**, the date and time of the next call is stored and the information received from the rate provider is checked to determine if the database stored in the call rating device should be updated. If the database should be updated, the subroutine "Get Update" is followed in block **122**.

In block **124** a determination is first made whether a device is required by a user before an update is requested or during transmission of any information between the call rating device and rate provider. For example, in the debit phone of FIG. **1**, if the customer requires use of the debit phone, and any data is being downloaded, then any data transfer is terminated so that the customer may use the phone (block **124***a*). If the call rating device is associated with a computer which must be used, the data transfer is terminated. In block **126** the data is received from the rate provider typically as a block of data or packet which can be transmitted over the telephone network. Typically, some protocol such as X modem, Y modem, Z modem could be used to insure accurate transfer.

In block **128**, if the transfer of information is not adequate, then a retry count is incremented (block **130**), and data transfer is retried once again. If there have been too many retries (block **132**) then a flag initiating termination of retries is established (block **134**) and return is made to normal processing (block **136**). The number of retries in block **132** can be set to a predetermined amount such as three or four retries. If the number of retries has not reached the maximum, the "Get Update" routine is initiated.

In block **137**, the transferred data is stored. If more data is required (block **137***a*), the "Get Update" subroutine is initiated. If more data is not required, the effective date and time is received (block **139**) and stored (block **139***a*). The processor initiates an "Update Okay" flag (block **140**) and return is made to the normal processing routine. If the update was not proper (FIG. **5**, block **150**), then the date and time of the next call is not changed. The call rating device will keep calling at the proper intervals of time until it receives an update. If the update is okay, then the date and time of the next call is stored (block **152**). After the date and time is stored in, normal processing occurs (block **154**).

Referring now to FIGS. **7** and **8**, the call processing routines for the rate provider **30** are illustrated. As shown in FIG. **7**, the rate provider receives the update request from the call rating device (block **160**). It receives 1) the calling station's phone number; 2) the date and time of the last update; and 3) the current date and time (block **162**). The rate provider saves that information (block **164**) and then determines if the calling station with associated call rating device is a valid subscriber to the rate network (block **166**). If the number is not a valid subscriber, the call is terminated (block **168**) and the rate provider then waits for the next update request from another calling station (block **170**).

If the number received is a number for a valid subscriber (block **166**), then the rate provider sends the date and time of the next call to be made by that particular calling station (block **172**). If a newer rate table is available, (block **173**), then an update flag is initiated by the processing unit of the rate provider (block **174**) and the update is sent, illustrated in the "Send Update" subroutine of FIG. **8**.

As shown in FIG. **8**, the block of data is retrieved such as from the hard disk (block **180**) and the block of data is sent over the telephone network (block **182**). If the data transfer is not proper (block **184**), such as if a pay phone has terminated data transfer, then the data block is sent again (block **182**). This loop may repeat for several instances.

If the data transfer is proper, then verification is made whether more data should be sent, (block **186**). If more data should be sent, then further data is retrieved and transferred (block **180**). If more data does not need to be transmitted, then the effective data and time is transmitted (block **188**) and the update information is saved (block **190**) and stored in the accounting or transactional database **68**. Processing then returns to normal routine (block **192**).

If a newer rate table is not available (block **174**), then an "Update Not Required" flag is initiated (block **194**) and the call is terminated. The rate provider then waits for the update request (block **170**) from another call rating device.

The method and system of the present invention is advantageous because the growing telephone network has seen the outgrowth of various options such as debit telephones and least cost routing devices, which house rate tables that can be updated. Use of the 900 service to call a rate provider will simplify billing procedures as compared to more complex 800 toll free services.

It is to be understood that the above description is only one embodiment of the invention. Numerous other arrangements may be devised by one skilled in the art without departing from the spirit and skill of the invention.

That which is claimed is:

1. A method for updating a database that stores billing rate parameters for a call rating device used for cost determinations for a calling station, comprising the steps of

connecting at a predetermined time and date via a data transfer line the call rating device to a rate provider having billing rate parameters for a plurality of calling stations,

transmitting over the data transfer line indicia identifying the call rating device and the date and time of the last update of the billing rate parameters,

verifying if billing rate parameters should be updated, and

transmitting from the rate provider to the call rating device the updated billing rate parameters when the rate provider determines that an update is required.

2. The method according to claim **1** wherein the step of connecting via a data transfer line includes the step of connecting the call rating device to a telephone network via a modem and calling the rate provider.

3. The method according to claim **2** wherein the call rating device comprises a pay telephone.

4. The method according to claim **3** including the step of terminating the transfer of information between the rate provider and the pay telephone when the pay telephone is to be used.

5. The method according to claim **1** including terminating any data transfer between the call rating device and the rate provider when the call rating device is to be used.

6. The method according to claim **1** including storing the updated billing rate parameters in the call rating device after receiving the billing rate parameters, and substituting the updated parameters into the database at a later predetermined time.

7. The method according to claim 1 including the step of reattempting data transfer from the rate provider to the call rating device if the initial rate data was not transferred properly, and terminating the reattempts to transfer data after a predetermined number of attempts to transfer data have been made.

8. The method according to claim 1 including the step or updating the time and date for connecting to the rate provider.

9. The method according to claim 1 including reattempting data transfer when the data has not transferred properly.

10. The method according to claim 1 wherein the connecting step of claim 1 includes the step of calling a 900 number.

11. A method for updating a database that stores billing rate parameters for a call rating device associated with a calling station operatively connected to a telephone network, comprising

calling at a predetermined date and time a rate provider having billing rate parameters for a plurality of calling stations so as to connect between the calling station with the associated call rating device and the rate provider,

transmitting over the telephone network to the rate provider the phone number of the calling station and the date and time of the last update of the billing rate parameters,

verifying if the billing rate parameters should be updated, and

transmitting over the telephone network to the calling station the updated billing rate parameters when the rate provider determines that a database update is required.

12. The method according to claim 11 including the step of calling the rate provider at regular intervals of time.

13. The method according to claim 11 including the step of receiving from the rate provider a calling station time schedule for calling the rate provider for updated billing rate information at a predetermined time.

14. The method according to claim 11 wherein the calling station comprises a pay telephone and including the step of terminating the transfer of information between the rate provider and the pay telephone when the pay telephone is to be used.

15. The method according to claim 11 including the step of verifying the accuracy of the transfer of information between the calling station and the rate provider.

16. The method according to claim 11 including the step of reattempting data transfer from the rate provider to the call rating device if the initial data was not transferred properly, and terminating the attempt to transfer data after a predetermined number of attempts to transfer data have been made.

17. The method according to claim 11 including the step of downloading the rate information to the database via a modem.

18. The method according to claim 11 wherein the call rating device comprises a least cost rating device.

19. The method according to claim 11 including storing the updated billing rate parameters in the call rating device after receiving the parameters, and substituting the updated parameters into the database at a later predetermined time.

20. The method according to claim 11 including the step of updating the time and date for connection to the rate provider.

21. The method according to claim 11 including reattempting data transfer when the data has not transferred properly.

22. The method according to claim 11 wherein the connecting step of claim 1 includes the step of calling a 900 number.

23. A method for updating subscriber databases that store billing rate parameters for call rate devices which are associated with respective subscriber calling stations operatively connected to a telephone network, comprising the steps of

each subscriber station calling at a scheduled time a rate provider having billing rate parameters for each calling station, wherein the scheduled time for each call is such that the calls from each calling station are substantially spaced apart in time from each other,

each station transmitting over the telephone network the respective phone number of its station and the date and time of the last update of the billing rate parameters,

verifying in the rate provider that an update is required, and

transmitting over the telephone network from the rate provider to the calling station the updated billing rate parameters when an update is required.

24. The method according to claim 23 including the step of calling the rate provider at regular intervals of time.

25. The method according to claim 23 including the step of receiving from the rate provider device a calling station time schedule for calling the rate provider for updated information.

26. The method according to claim 23 wherein the calling station comprises a pay telephone and including the step of terminating the transfer of information between the rate provider device and the pay telephone when the pay telephone is to be used.

27. The method according to claim 23 including the step of verifying the accuracy of the transfer of information between the calling station and the rate provider device.

28. The method according to claim 23 including the step of reattempting to transfer data from the rate provider to the calling station if the initial data was not transferred properly, and terminating the attempt to transfer data after a predetermined number of attempts to transfer data have been made.

29. The method according to claim 23 including the step of downloading the rate information to the database via a modem.

30. The method according to claim 23 including verifying that a calling party is a subscriber.

31. The method according to claim 23 including storing the updated billing rate parameters in the call rating device after receiving the update billing rate parameters, and substituting the updated billing rate parameters into the current database at a later predetermined time.

32. The method according to claim 23 including the step of updating the time and date for connecting to the rate provider.

33. The method according to claim 23 including the step of reattempting data transfer when the data has not transferred properly.

34. The method according to claim 23 wherein the connecting step of claim 24 includes the step of calling a 900 number.

35. A call rating updating system comprising

a call rating device, including a database that stores current updated billing rate parameters used for cost determinations for a calling station,

a data transfer line operatively connected to the call rating device,

means for transmitting over the data transfer line indicia information identifying the call rating device and update information identifying the last update of the billing rate parameters, and

a rate provider operatively connected to said data transfer line, said rate provider including

a) a database having updated billing rate parameters for a plurality of calling stations,

b) means for receiving the information from the call rating device,

c) means for verifying if billing rate parameters should be updated, and

d) means transmitting from the rate provider to the call rating device the updated billing rate parameters when the rate provider determines that an update is required.

36. The system according to claim **35** wherein said data transfer line comprises a switched communication path of a telephone network.

37. The system according to claim **35** wherein the call rating device comprises a pay telephone.

38. The system according to claim **35** including means for terminating the transfer of information between the rate provider and the call rating device when the device is to be used.

39. The system according to claim **35** wherein said call rating device comprises a least cost rating device.

40. The system according to claim **35** including modem means for connecting the call rating device and rate provider to the data transfer line.

41. The system according to claim **35** wherein said call rating device includes means for storing the updated billing rate parameters in the call rating device after receiving the updated billing rate parameters, and means for substituting the updated parameters into the current database at a later predetermined time.

42. The system according to claim **35** wherein the rate provider is connected via a 900 number.

43. A system for updating a database having billing rate parameters for determining the cost of telephone calls originating from a calling station to a destination calling station via a telephone network, comprising

a calling station operatively connected to the telephone network, and including database means associated with the calling station for storing billing rate parameters for determining the cost of the phone call, and including means for transmitting over the telephone network information identifying the phone number of the calling station and the date and time of the last update of the billing rate parameters,

rate providing means operatively connected to the phone network for storing billing rate parameters for calling stations, said rate providing means including means for receiving said information from the calling station, said rate providing means including:

a) control means for determining whether the calling party database should be updated, and

b) means for transmitting updated billing rate parameters to the calling party when an update is required.

44. The system according to claim **43** wherein the call rating device comprises a least cost rating device.

45. The system according to claim **43** wherein said means for transmitting information from the calling station includes a modem.

46. The system according to claim **43** wherein said means for transmitting updated billing rate parameters to the calling station includes a modem.

47. The system according to claim **43** wherein said calling station comprises a pay telephone, and including means for terminating any transfer of information between said pay telephone and said rate providing means when said pay telephone is to be used.

48. The system according to claim **43** wherein the rate provider is connected via a 900 number.

* * * * *

US005519769C1

(12) **REEXAMINATION CERTIFICATE** (4583rd)

United States Patent
Weinberger et al.

(10) **Number: US 5,519,769 C1**
(45) **Certificate Issued: May 28, 2002**

(54) **METHOD AND SYSTEM FOR UPDATING A CALL RATING DATABASE**

(75) Inventors: **Gerald J. Weinberger**, Smithtown; **Roger C. Lee**, Wading River, both of NY (US)

(73) Assignee: **Rates Technology Inc.**, Smithtown, NY (US)

Reexamination Request:
No. 90/005,473, Aug. 31, 1999

Reexamination Certificate for:
Patent No.: **5,519,769**
Issued: **May 21, 1996**
Appl. No.: **08/223,082**
Filed: **Apr. 4, 1994**

(51) **Int. Cl.**[7] **H04M 15/00**
(52) **U.S. Cl.** **379/112**; 379/111; 379/113; 379/114; 379/115; 379/130; 379/131; 379/132
(58) **Field of Search** 379/111, 112, 379/113, 114, 115, 116, 130, 131, 132, 88, 104, 105, 106

(56) **References Cited**

U.S. PATENT DOCUMENTS

5,161,109	A	11/1992	Keating et al.	364/464.02
5,212,789	A	5/1993	Rago	395/600
5,473,630	A	12/1995	Penzias et al.	375/114
5,515,425	A	5/1996	Penzias et al.	379/114
5,799,071	A	8/1998	Azar et al.	379/113

FOREIGN PATENT DOCUMENTS

EP	0 586 157 A2	3/1994	.....	G06F/15/403

OTHER PUBLICATIONS

Communiqué Telecommunications, Inc. (Ontario, California), "Customized Telemiser Selects Low–Cost Routing," *Computerworld,* vol. XVIII, No. 48, Nov. 28, 1983, p. 109 (plus cover page and contents page).
Communiqué Telecommunications, Inc. (Ontario, California), "Least–Cost Router," *Telecommunications,* vol. 18, No. 1, Jan., 1984, p. 92 (plus cover page and contents page).
Communiqué Telecommunications, Inc. (Ontario, California), "How to Make the Least of Your Long Distance Phone Bill," *Communications News,* vol. 21, No. 9, Sep. 1984, p. 171 (plus cover page).
Communiqué Telecommunications, Inc. (Ontario, California), "How to Make the Least of Your Long Distance Phone Bill," *Sports Illustrated,* Oct. 1, 1984, p. 113 (plus cover page).
CALLMISER Trademark File History (Registration No. 1725288; Registration Date Oct. 20, 1992; International Class 9).

Primary Examiner—Vijay Shankar

(57) **ABSTRACT**

A method and system for updating a database stores billing rate parameters for call rating devices associated with a calling station. The calling station calls at a predetermined date and time a rate provider, which includes billing rate parameters for a plurality of calling stations. The call rating device transmits over the telephone network to the rate provider the phone number of the calling station, and the date and time of the last updated database. The rate provider verifies that the billing rate parameters of the calling station should be updated, then transmits back over the telephone network to the calling station the updated database. The rate provider also sends data as to the new date and time for the call rating device to place a call to the rate provider.

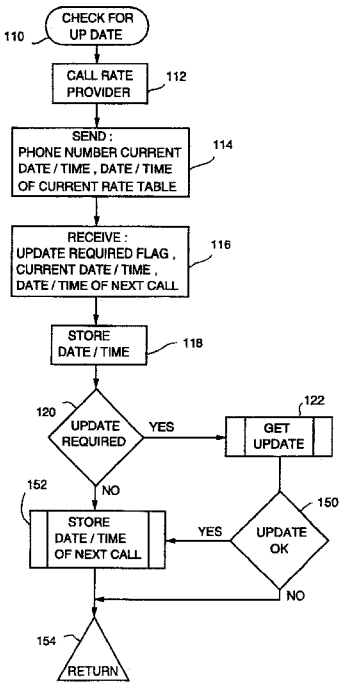

REEXAMINATION CERTIFICATE ISSUED UNDER 35 U.S.C. 307

THE PATENT IS HEREBY AMENDED AS INDICATED BELOW.

Matter enclosed in heavy brackets [ ] appeared in the patent, but has been deleted and is no longer a part of the patent; matter printed in italics indicates additions made to the patent.

AS A RESULT OF REEXAMINATION, IT HAS BEEN DETERMINED THAT:

The patentability of claims **1–48** is confirmed.

New claims **49–53** are added and determined to be patentable.

49. A method for updating a database that stores billing rate parameters for a call rating device used for cost determinations for a calling station, comprising the steps of

connecting at a predetermined time and date via a data transfer line the call rating device to a rate provider having billing rate parameters for a plurality of calling stations,

transmitting over the data transfer line indicia identifying the call rating device and the date and time of the last update of the billing rate parameters,

verifying if billing rate parameters should be updated based on said transmitted last update indicia, and

transmitting from the rate provider to the call rating device the updated billing rate parameters when the rate provider determines that an update is required.

50. A method for updating a database that stores billing rate parameters for a call rating device associated with a calling station operatively connected to a telephone network, comprising

calling at a predetermined date and time a rate provider having billing rate parameters for a plurality of calling stations so as to connect between the calling station with the associated call rating device and the rate provider,

transmitting over the telephone network to the rate provider the phone number of the calling station and the date and time of the last update of the billing rate provider,

verifying if the billing rate parameters should be updated based on said transmitted last update information, and

transmitting over the telephone network to the calling station the updated billing rate parameters when the rate provider determines that a database update is required.

51. A method for updating subscriber databases that store billing rate parameters for call rate devices which are associated with respective subscriber calling stations operatively connected to a telephone network, comprising the steps of

each subscriber station calling at a scheduled time a rate provider having billing rate parameters for each calling station, wherein the scheduled time for each call is such that the calls from each calling station are substantially spaced apart in time from each other,

each station transmitting over the telephone network the respective phone number of its station and the date and time of the last update of the billing rate parameters,

verifying in the rate provider that an update is required based on said transmitted last update information, and

transmitting over the telephone network from the rate provider to the calling station the updated billing rate parameters when an update is required.

52. A call rating updating system comprising

a call rating device, including a database that stores current updated billing rate parameters used for cost determination for a calling station,

a data transfer line operatively connected to the call rating device, means for transmitting over the data transfer line indicia information identifying the call rating device and update information identifying the last update of the billing rate parameters, and

a rate provider operatively connected to said data transfer line, said rate provider including

(a) a database having updated billing rate parameters for a plurality of calling stations,

(b) means for receiving the information from the call rating device,

(c) means for verifying if billing rate parameters should be updated based on said received last update information, and

(d) means transmitting from the rate provider to the call rating device the updated billing rate parameters when the rate provider determines that an update is required.

53. A system for updating a database having billing rate parameters for determining the cost of telephone calls originating from a calling station to a destination calling station via a telephone network, comprising

a calling station operatively connected to the telephone network, and including database means associated with the calling station for storing billing rate parameters for determining the cost of the phone call, and including means for transmitting over the telephone network information identifying the phone number of the calling station and the date and time of the last update of the billing rate parameters,

rate providing means operatively connected to the phone network for storing billing rate parameters for calling stations, said rate providing means including means for receiving said information from the calling station, said rate providing means including:

(a) control means for determining whether the calling party database should be updated based on said received last update information; and

(b) means for transmitting updated billing rate parameters to the calling party when an update is required.

* * * * *

Exhibit I

IN THE UNITED STATES DISTRICT COURT
FOR THE DISTRICT OF DELAWARE

RATES TECHNOLOGY INC., *Plaintiff,* v. QWEST COMMUNICATIONS CORPORATION, *Defendants.*	Civil Action No. 1:07-cv-00442-JJF Filed: September 28, 2007

DECLARATION OF JOE SCIVICQUE
IN SUPPORT OF QCC'S MOTION TO DISMISS PLAINTIFF'S COMPLAINT

I, Joseph A. Scivicque, state the following:

1. I am a Staff Engineer responsible for developing voice network architectures for Qwest Communications Corporation ("QCC"). In that capacity, I am responsible for defining network requirements and consulting with various network design, test and engineering organizations to implement and deploy new systems and services in the PSTN and VoIP Networks at QCC. I have been employed in this role for seven years.

2. I am familiar with QCC's systems for routing telephone calls and I am familiar with QCC's systems for determining the route that telephone calls follow using QCC's OneFlex® services.

3. QCC offers five different OneFlex® services -- OneFlex IP Long Distance, OneFlex IP Toll Free, OneFlex Hosted VoIP, OneFlex Integrated Access and OneFlex Managed IPC.

4. QCC uses a number of different systems for call routing. The five different OneFlex services do not all use the same call routing systems.

5. None of QCC's OneFlex® services use a database for storing billing rate parameters that is addressed for identifying communication switch paths.

6. None of QCC's OneFlex® services use a "call rating device" that employs any method for updating "billing rate parameters."

I swear under penalty of perjury that, to the best of my knowledge, the foregoing information is true and correct.

Dated: September 28, 2007

Joseph A. Scivicque