IN THE UNITED STATES DISTRICT COURT
FOR THE DISTRICT OF DELAWARE

INTERMEC TECHNOLOGIES CORP., a Delaware corporation,	)	
Plaintiff,	)	C. A. No. 07-272-SLR
v.	)	**JURY TRIAL DEMANDED**
PALM, INC., a Delaware corporation,	)	
Defendant.	)	

DEFENDANT PALM, INC.'S SECOND AMENDED ANSWER, DEFENSES, COUNTERCLAIMS, AND JURY DEMAND

Defendant Palm, Inc. ("Palm") answers the Complaint for Patent Infringement of Intermec Technologies Corp. ("Intermec") as follows:

JURISDICTION AND VENUE

1. Palm admits that this action arises under the Patent Laws of the United States, 35 U.S.C. § 101 et seq., and that there is subject matter jurisdiction under 28 U.S.C. § 1338(a).

2. Palm admits that venue is proper in this judicial district pursuant to 28 U.S.C. §§ 1391 and 1400(b).

THE PARTIES

3. Palm lacks information and belief as to Intermec's incorporation and principal place of business and denies the allegations in paragraph 3 upon that basis.

4. Palm admits the allegations in paragraph 4.

ASSERTED PATENTS

5. Palm admits that United States Patent No. 5,349,678 ("the '678 patent") is entitled "Versatile RF Data Capture System," and was issued by the United States Patent and Trademark Office on September 20, 1994. Palm admits that what purports to be a copy of the '678 patent is attached to Intermec's Complaint. With respect to the remainder of the allegations of paragraph 5, Palm lacks sufficient information on which to form a belief as to the truth of the allegations, and on that basis denies each and every such allegation.

6. Palm admits that United States Patent No. 5,568,645 ("the '645 patent") is entitled "Versatile RF Data Capture System," and was issued by the United States Patent and Trademark Office on October 22, 1996. Palm admits that what purports to be a copy of the '645 patent is attached to Intermec's Complaint. With respect to the remainder of the allegations of paragraph 6, Palm lacks sufficient information on which to form a belief as to the truth of the allegations, and on that basis denies each and every such allegation.

7. Palm admits that United States Patent No. 5,987,499 ("the '499 patent") is entitled "Versatile RF Data Capture System," and was issued by the United States Patent and Trademark Office on November 16, 1999. Palm admits that what purports to be a copy of the '499 patent is attached to Intermec's Complaint. With respect to the remainder of the allegations of paragraph 7, Palm lacks sufficient information on which to form a belief as to the truth of the allegations, and on that basis denies each and every such allegation.

8. Palm admits that United States Patent No. 5,468,947 ("the '947 patent") is entitled "Pocket Size Data Capture Unit With Processor and Shell Modules," and was issued by the United States Patent and Trademark Office on November 21, 1995. Palm admits that what

purports to be a copy of the '947 patent is attached to Intermec's Complaint. With respect to the remainder of the allegations of paragraph 8, Palm lacks sufficient information on which to form a belief as to the truth of the allegations, and on that basis denies each and every allegation.

9. Palm admits that United States Patent No. 5,892,971 ("the '971 patent") is entitled "Portable Data Processing Device Having An Indicia Reader And A Multi-Tasking Operating System Capable Of Executing Battery Monitoring Instructions While Concurrently Executing Application Programs," and was issued by the United States Patent and Trademark Office on April 6, 1999. Palm admits that what purports to be a copy of the '971 patent is attached to Intermec's Complaint. With respect to the remainder of the allegations of paragraph 9, Palm lacks sufficient information on which to form a belief as to the truth of the allegations, and on that basis denies each and every allegation.

10. Palm admits that it sells the Palm Treo 700w, Treo 700wx Treo 750 products. Palm denies that its products infringe the patents-in-suit, and on that basis denies all remaining allegations in paragraph 10.

FIRST CLAIM FOR RELIEF

11. Palm lacks information upon which to form a belief as to the truth of the allegations in paragraph 11, and on that basis denies each and every allegation in paragraph 11.

12. Palm denies that it has been and is infringing, inducing the infringement of, and/or contributing to the infringement of the '678 patent, and on that basis denies the allegations in paragraph 12.

13. Palm denies that it has caused Intermec any injury or damages, and further denies that Intermec is entitled to recover from Palm any damages or compensation, and on that basis denies the allegations in paragraph 13.

14. Palm denies that it has been and is willfully and deliberately infringing the '678 patent, and further denies that Intermec is entitled to any damages from Palm, and on that basis denies the allegations in paragraph 14.

15. Palm denies that it has caused Intermec irreparable injury and on that basis denies the allegations in paragraph 15.

SECOND CLAIM FOR RELIEF

16. Palm lacks information upon which to form a belief as to the truth of the allegations in paragraph 16, and on that basis denies each and every allegation in paragraph 16.

17. Palm denies that it has been and is infringing, inducing the infringement of, and/or contributing to the infringement of the '645 patent, and on that basis denies the allegations in paragraph 17.

18. Palm denies that it has caused Intermec any injury or damages, and further denies that Intermec is entitled to recover from Palm any damages or compensation, and on that basis denies the allegations in paragraph 18.

19. Palm denies that it has been and is willfully and deliberately infringing the '645 patent, and further denies that Intermec is entitled to any damages from Palm, and on that basis denies the allegations in paragraph 19.

20. Palm denies that it has caused Intermec irreparable injury and on that basis denies the allegations in paragraph 20.

THIRD CLAIM FOR RELIEF

21. Palm lacks information upon which to form a belief as to the truth of the allegations in paragraph 21, and on that basis denies each and every allegation in paragraph 21.

22. Palm denies that it has been and is infringing, inducing the infringement of, and/or contributing to the infringement of the '499 patent, and on that basis denies the allegations in paragraph 22.

23. Palm denies that it has caused Intermec any injury or damages, and further denies that Intermec is entitled to recover from Palm any damages or compensation, and on that basis denies the allegations in paragraph 23.

24. Palm denies that it has been and is willfully and deliberately infringing the '499 patent, and further denies that Intermec is entitled to any damages from Palm, and on that basis denies the allegations in paragraph 24.

25. Palm denies that it has caused Intermec irreparable injury and on that basis denies the allegations in paragraph 25.

FOURTH CLAIM FOR RELIEF

26. Palm lacks information upon which to form a belief as to the truth of the allegations in paragraph 26, and on that basis denies each and every allegation in paragraph 26.

27. Palm denies that it has been and is infringing, inducing the infringement of, and/or contributing to the infringement of the '947 patent, and on that basis denies the allegations in paragraph 27.

28. Palm denies that it has caused Intermec any injury or damages, and further denies that Intermec is entitled to recover from Palm any damages or compensation, and on that basis denies the allegations in paragraph 28.

29. Palm denies that it has been and is willfully and deliberately infringing the '947 patent, and further denies that Intermec is entitled to any damages from Palm, and on that basis denies the allegations in paragraph 29.

30. Palm denies that it has caused Intermec irreparable injury and on that basis denies the allegations in paragraph 30.

FIFTH CLAIM FOR RELIEF

31. Palm lacks information upon which to form a belief as to the truth of the allegations in paragraph 31, and on that basis denies each and every allegation in paragraph 31.

32. Palm denies that it has been and is infringing, inducing the infringement of, and/or contributing to the infringement of the '971 patent, and on that basis denies the allegations in paragraph 32.

33. Palm denies that it has caused Intermec any injury or damages, and further denies that Intermec is entitled to recover from Palm any damages or compensation, and on that basis denies the allegations in paragraph 33.

34. Palm denies that it has been and is willfully and deliberately infringing the '971 patent, and further denies that Intermec is entitled to any damages from Palm, and on that basis denies the allegations in paragraph 34.

35. Palm denies that it has caused Intermec irreparable injury and on that basis denies the allegations in paragraph 35.

DEFENSES

FIRST DEFENSE

36. Intermec's Complaint fails to state facts sufficient to state a cause of action and fails to state any claim upon which relief may be granted.

SECOND DEFENSE

37. One or more claims of U.S. Patent Nos. 5,349,678, 5,568,645, 5,987,499, 5,468,947, and 5,892,971 allegedly infringed by Palm are invalid for failure to comply with one or more of the requirements of 35 U.S.C. §§ 101, 102, 103, and 112.

THIRD DEFENSE

38. Defendant Palm's making, use or sale of its products, and the use of such products by Palm's customers, do not infringe any of the claims of U.S. Patent Nos. 5,349,678, 5,568,645, 5,987,499, 5,468,947, and 5,892,971 being asserted against Palm. Palm has not actively induced infringement of any claims of the patents being asserted against Palm, and Palm has not contributed to the infringement of any claims of the patents being asserted against Palm.

FOURTH DEFENSE

39. Prosecution history estoppel bars Intermec from proving infringement of the asserted claims under the doctrine of equivalents. Intermec is estopped from construing the

asserted claims of U.S. Patent Nos. 5,349,678, 5,568,645, 5,987,499, 5,468,947, and 5,892,971 in such a way as may cover Palm's activities by reason of statements made to the United States Patent and Trademark office during the prosecution of the applications that issued as the '678 patent, the '645 patent, the '499 patent, the '947 patent, and the '971 patent.

FIFTH DEFENSE

40. All claims of the '678 patent are void, invalid, and unenforceable by virtue of the failure of the patentee to act with the degree of candor and good faith required of persons who prepare or prosecute a patent application before the United States Patent and Trademark Office ("PTO"), including the failure to disclose material prior art and information known to the patentee and/or persons having substantial responsibility for the prosecution of the '678 patent.

41. On August 21, 1991, named inventors of the '678 patent and their agents associated with the prosecution of the application that resulted in the '678 patent – Michael D. Morris, Gregory Beggs, Richard Cederoth, James Dowdall, Robert Fieseler, Raymond Gable, Herbert Hart III, John Held Jr., John Leaheey, Van Lund, Timothy Malloy, Sidney Neuman, Arthur Olson, Jr., Donald Peterson, Philip Petti, Robert Ryan, Noel Smith, William Wesley, George Wheeler, and Fred Williams, among others (collectively the "'678 patentees") – filed U.S. Patent application no. 748,150 (the "'150 application") with the PTO and/or prosecuted the '150 application thereafter until it issued as the '678 patent.

42. At the time of the '150 application's filing on August 21, 1991, and during the prosecution of the '150 application, each of the '678 patentees had a continuing duty of candor and good faith to disclose to the PTO all information known to that individual that is material to patentability, pursuant to United States patent laws and regulation, including 37 C.F.R. §1.56.

43. Pursuant to 37 C.F.R. §§ 1.56, 1.97, and 1.98, the '678 patentees were required to file at least one Information Disclosure Statement ("IDS") with the PTO during the prosecution of the '150 application setting forth all patents, publications, applications, or other information known to be material to patentablility for consideration by the PTO.

44. One or more of the '678 patentees were also named inventors or agents associated with the prosecution of U.S. Patent application 06/904,496 (the "'496 application"), which was filed on September 15, 1986, almost 5 years prior to the filing of the '150 application. The '496 application was issued as U.S. Patent No. 4,972,463 (the "'463 patent") on November 20, 1990, less than a year prior to the filing of the '150 application.

45. One or more of the '678 patentees were also named inventors or agents associated with the prosecution of U.S. Patent application no. 07/486,521 (the "'521 application"), which was filed on June 26, 1992, less than a year after the '150 application was filed. The '521 application was issued as U.S. Patent No. 5,239,662 (the "'662 patent") on August 24, 1993, prior to the issuance of the '150 application as the '678 patent.

U.S. Patent No. 4,972,463

46. The '463 patent, entitled "In-Store Multiple Device Communications Unit And Centralized Data System Utilizing Same," identifies Arvin D. Danielson and Michael D. Morris as inventors. The '463 patent shares a common inventor with the '678 patent, Michael D. Morris.

47. The '463 patent discloses several of the elements of the claims of the '678 patent, including a data communications system consisting of a plurality of client data collection terminals, a server station with a mass memory means, communication means for

interconnecting the server station with the client terminals, and the server station operating on data in a second format style different from the first format style of the data terminal, as claimed in claim 1 of the '678 patent.

48. The '463 patent is material to patentability because there is a substantial likelihood that a reasonable examiner would have considered this preexisting, prior art information important in deciding whether to allow the '678 patent to issue. This is true because the specification of the '463 patent disclosed certain features of claim 1 and other claims in the '678 patent that were not disclosed in any other reference before the examiner who granted the '678 patent. For example, the claims of the '678 patent disclose in a terminal a "means operating on data formatted in a first style," and they disclose in a server a "means operating on data formatted in a second style different from said first style." ('678 patent col. 15:9-10, 15:17-18, claim 1) (hereinafter the "two data format feature"). This includes "translat[ing] the format" of data from a format used by the terminal to a format used by the server and vice versa. ('678 patent, col. 14:16-17, 14:31-32, claim 7).

49. In the Notice of Allowability for the '678 patent, the examiner emphasized that the prior art did not disclose the "two data format feature" by stating that "the prior art, either individually or in combination, does not teach a data capture system comprising portable data collection terminals with a first control means operating on data formatted in a first style and a server station with a second control means operating on data formatted in a second style." (Notice of Allowability mailed 9/23/93 at 2). The examiner had before him prior art that showed portable data collection terminals, but he did not have before him prior art that disclosed the "two data format feature."

50. The '463 patent discloses the "two data format" feature. For example, terminals that collect data ('463 patent col. 3:28-36, 3:18-19) operate on data using communication protocols specific to, for example, an A.T.M. network, a credit/debit network, or a point of sale network. (col. 3:21, 3:30, 3:32). The data is then transmitted to a server (col. 5:15-22), where an interface may "convert the device [i.e., terminal] protocols to a standard high level communications architecture, e.g., SDLC/SNA" (col. 5:43-46, col. 5:54-58). This process also takes place in reverse, when data received by the server in the SDLC/SNA format is converted into a format recognized by the terminal by adding any "needed control characters" before transmission to the terminal. (col. 6:14-24). The two different data "protocols" in the '463 patent qualify as two different "formats" of data, since each refers to a structure for the data that allows it to be processed by devices that comply with the given protocol (e.g., SDLC/SNA used at the server, or the proprietary communication protocol used at the given terminal).

51. The '678 patentees did not submit the '463 patent to the examiner through an IDS or otherwise in the '150 application, even though the '463 patent had been published before the '150 application was filed and shared an inventor and prosecuting agents with the '150 application.

52. The '678 patentees were aware of the Reason of Allowance stated by the examiner on September 22, 1993, and prosecution of the '150 application remained open three months later – as demonstrated by the post-issuance Amendment filed by the '678 patentees on December 23, 1993. The applicants were aware of the '463 patent at the time the Notice of Allowability was transmitted to them by the examiner. They nonetheless failed to disclose the '463 patent to the examiner, notwithstanding the fact that it disclosed the "two data format feature" that the examiner cited as missing from the art before him.

53. On information and belief, the '678 patentees, including Michael D. Morris, an inventor on both the '463 and '678 patents, were aware of the materiality of the '463 patent to the '150 patent application at the time the '150 application was filed and during its prosecution.

54. On information and belief, the '678 patentees' intent to mislead the PTO can be inferred by, among other things, the overwhelming materiality of the '463 patent to the '150 application, Mr. Morris's role as an inventor on both the '678 and the '463 patents, and the '678 patentees' awareness of the examiner's statements regarding the materiality of the "two data format feature."

U.S. Patent No. 5,239,662

55. U.S. Patent No. 5,239,662, entitled "System Including Multiple Device Communications Controller Which Coverts Data Received From Two Different Customer Transaction Devices Each Using Different Communications Protocols Into A Single Communications Protocol" identifies Arvin D. Danielson, Joseph J. Kubler, Dennis A. Durbin, Michael D. Morris, and Keith K. Cargin, Jr as inventors. It issued from U.S. Patent application no. 905,900, filed on June 26, 1992. The '900 application was a continuation of U.S. Patent application 486,521, filed on February 28, 1990, abandoned, which was a divisional of the '496 application. The '662 patent shares a common inventor with the '678 patent, Michael D. Morris.

56. The '662 patent discloses several of the elements of the claims of the '678 patent, including a data communications system consisting of a plurality of client data collection terminals, a server station with a mass memory means, communication means for interconnecting the server station with the client terminals, and the server station operating on

data in a second format style different from the first format style of the data terminal, as claimed in claim 1 of the '678 patent.

57. The '662 patent is material to patentability because there is a substantial likelihood that a reasonable examiner would have considered this preexisting, prior art information important in deciding whether to allow the '678 patent to issue. This is true because the specification of the '662 patent disclosed certain features of claim 1 and other claims in the '678 patent that were not disclosed in any other reference before the examiner who granted the '678 patent. For example, the claims of the '678 patent disclose in a terminal a "means operating on data formatted in a first style," and they disclose in a server a "means operating on data formatted in a second style different from said first style." ('678 patent col. 15:9-10, 15:17-18, claim 1) (hereinafter the "two data format feature"). This includes "translat[ing] the format" of data from a format used by the terminal to a format used by the server and vice versa. ('678 patent, col. 14:16-17, 14:31-32, claim 7).

58. In the Notice of Allowability for the '678 patent, the examiner emphasized that the prior art did not disclose the "two data format feature" by stating that "the prior art, either individually or in combination, does not teach a data capture system comprising portable data collection terminals with a first control means operating on data formatted in a first style and a server station with a second control means operating on data formatted in a second style." (Notice of Allowability mailed 9/23/93 at 2). The examiner had before him prior art that showed portable data collection terminals, but he did not have before him prior art that disclosed the "two data format feature."

59. The '662 patent discloses the "two data format" feature. For example, terminals that collect data ('662 patent col. 2:64-68, 2:54-55) operate on data using communication protocols specific to, for example, an A.T.M. network, a credit/debit network, or a point of sale network. (col. 2:57, 2:66, 3:2). The data is then transmitted to a server (col. 4:61-68), where an interface may "convert the device [i.e., terminal] protocols to a standard high level communications architecture, e.g., SDLC/SNA" (col. 5:13-16, col. 5:24-28). This process also takes place in reverse, when data received by the server in the SDLC/SNA format is converted into a format recognized by the terminal by adding any "needed control characters" before transmission to the terminal (col. 5:52-62). The two different data "protocols" in the '662 patent qualify as two different "formats" of data, since each refers to a structure for the data that allows it to be processed by devices that comply with the given protocol (e.g., SDLC/SNA used at the server, or the proprietary communication protocol used at the given terminal).

60. The '678 patentees did not submit the '662 patent to the examiner through an IDS or otherwise in the '150 application, even though the '662 patent had been issued merely one month prior to the date on which the examiner issued his Notice of Allowability on the '150 application, and despite the fact that the '662 patent shared an inventor and prosecuting agents with the '150 application.

61. The '678 patentees were aware of the Reason of Allowance stated by the examiner on September 22, 1993, and prosecution of the '150 application remained open three months later – as demonstrated by the post-issuance Amendment filed by the '678 patentees on December 23, 1993. The applicants were aware of the '662 patent at the time the Notice of Allowability was transmitted to them by the examiner. They nonetheless failed to disclose the

'662 patent to the examiner notwithstanding the fact that it disclosed the "two data format feature" that the examiner cited as missing from the art before him.

62. On information and belief, the '678 patentees, including Michael D. Morris, an inventor on both the '662 and '678 patents, were aware of the materiality of the '662 patent to the '150 patent application at the time the '150 application was filed and during its prosecution.

63. On information and belief, the '678 patentees' intent to mislead the PTO can be inferred by, among other things, the overwhelming materiality of the '662 patent to the '150 application, plus Mr. Morris's role as an inventor on both the '678 and the '662 patents, and the '678 patentees' awareness of the examiner's statements regarding the materiality of the "two data format feature."

SIXTH DEFENSE

64. The '645 and '499 patents are unenforceable based on the doctrine of infectious unenforceability.

65. On information and belief, the '645 and '499 patents have an immediate and necessary relation to the '678 patent. The '645 and '499 patents claim on their face that they are related to the '678 patent, and the '645 and '499 patents make claims of priority to the '678 patent. The '645 patent is a continuation of the '678 patent, and the '499 is a continuation of the '645 patent. The '645 and '499 patents are based on the same specification as the '678 patent, and large portions of the description of the invention are the same in both patents. Thus, the specification and claims of the '678 patent provide the foundation upon which the '645 and '499 patents are built.

66. On information and belief, Intermec's failure to disclose known material prior art to the PTO during prosecution of the '678 patent also renders unenforceable the '645 and '499 patents.

67. An immediate and necessary relationship exists between Intermec's conduct in the prosecution of the '678 patent and the prosecution of the '645 and '499 patents. Under the doctrine of infectious unenforceability, a patent which relates to, or is dependent upon, a patent procured through fraud and misrepresentation during prosecution in the PTO is likewise tainted in the same manner as the patent with respect to which the fraud occurred. Therefore, the '645 and '499 patents are unenforceable by reason of the doctrine of infectious unenforceability.

SEVENTH DEFENSE

68. Intermec's claims are barred by the equitable doctrines of laches, estoppel, waiver, implied license, and/or unclean hands.

EIGHTH DEFENSE

69. Defendant Palm reserves the right to amend its answer to assert further defenses based on future discovery in the lawsuit.

COUNTERCLAIMS

Pursuant to Federal Rule of Civil Procedure 13, Palm, Inc. hereby asserts the following counterclaims against Intermec Technologies Corp. and avers as follows:

NATURE AND BASIS OF ACTION

1. This is an action arising under the United States Patent Act, 35 U.S.C. § 1 *et seq.*

PARTIES

2. Counterclaim Defendant Intermec is, on information and belief, a corporation incorporated under the laws of the State of Delaware and has its principle place of business at 6001 36th Avenue West, Everett, WA 98803.

3. Counterclaimant Palm is a corporation organized and existing under the laws of Delaware, having a place of business at 950 West Maude Avenue, Sunnyvale, CA 94085.

JURISDICTION AND VENUE

4. This is an action for declaratory judgment of non-infringement and invalidity of U.S. Patent No. 5,349,678 ("the '678 patent"), U.S. Patent No. 5,568,645, ("the '645 patent), U.S. Patent No. 5,987,499 ("the '499 patent), U.S. Patent No. 5,468,947 ("the '947 patent), and U.S. Patent No. 5,892,971 ("the '971 patent). This is also an action for infringement of U.S. Patent No. 6,665,803 ("the '803 patent") (Ex. A hereto), and U.S. Patent No. 7,096,049 ("the '049 patent") (Ex. B hereto). This Court has subject matter jurisdiction over these claims pursuant to 28 U.S.C. §§ 1331, 1338(a), 2201, and 2202.

5. Venue is proper in this district under 28 U.S.C. §§ 1391(b) and (c).

GENERAL ALLEGATIONS

6. On May 18, 2007, Intermec filed suit against Palm, claiming infringement of the '678, '645, '499, '947 and '971 patents.

7. A justiciable controversy exists between Intermec and Palm concerning the infringement and validity of the '678, '645, '499, '947 and '971 patents.

FIRST COUNTERCLAIM

(NONINFRINGEMENT OF THE INTERMEC PATENTS-IN-SUIT)

8. Palm incorporates paragraphs 1-7 as if fully set forth herein.

9. Palm has not and is not now infringing, contributorily infringing, or inducing infringement of the claims of the '678 patent asserted by the plaintiff in this litigation ("the asserted '678 claims").

10. Palm is entitled to a declaratory judgment that Palm does not infringe the asserted '678 claims.

11. Palm has not and is not now infringing, contributorily infringing, or inducing infringement of the claims of the '645 patent asserted by the plaintiff in this litigation ("the asserted '645 claims").

12. Palm is entitled to a declaratory judgment that Palm does not infringe the asserted '645 claims.

13. Palm has not and is not now infringing, contributorily infringing, or inducing infringement of the claims of the '499 patent asserted by the plaintiff in this litigation ("the asserted '499 claims").

14. Palm is entitled to a declaratory judgment that Palm does not infringe the asserted '499 claims.

15. Palm has not and is not now infringing, contributorily infringing, or inducing infringement of the claims of the '947 patent asserted by the plaintiff in this litigation ("the asserted '947 claims").

16. Palm is entitled to a declaratory judgment that Palm does not infringe the asserted '947 claims.

17. Palm has not and is not now infringing, contributorily infringing, or inducing infringement of the claims of the '971 patent asserted by the plaintiff in this litigation ("the asserted '971 claims").

18. Palm is entitled to a declaratory judgment that Palm does not infringe the asserted '971 claims.

SECOND COUNTERCLAIM

(INVALIDITY OF THE INTERMEC PATENTS IN SUIT)

19. Palm incorporates paragraphs 1-18 as if fully set forth herein.

20. One or more claims of the '678 patent are invalid for failure to comply with one or more of the conditions and requirements of patentability set forth in the patent statutes, including 35 U.S.C. §§ 101, 102, 103 and/or 112.

21. Palm is entitled to declaratory judgment that one or more claims of the '678 patent are invalid.

22. One or more claims of the '645 patent are invalid for failure to comply with one or more of the conditions and requirements of patentability set forth in the patent statutes, including 35 U.S.C. §§ 101, 102, 103 and/or 112.

23. Palm is entitled to declaratory judgment that one or more claims of the '645 patent are invalid.

24. One or more claims of the '499 patent are invalid for failure to comply with one or more of the conditions and requirements of patentability set forth in the patent statutes, including 35 U.S.C. §§ 101, 102, 103 and/or 112.

25. Palm is entitled to declaratory judgment that one or more claims of the '499 patent are invalid.

26. One or more claims of the '947 patent are invalid for failure to comply with one or more of the conditions and requirements of patentability set forth in the patent statutes, including 35 U.S.C. §§ 101, 102, 103 and/or 112.

27. Palm is entitled to declaratory judgment that one or more claims of the '947 patent are invalid.

28. One or more claims of the '971 patent are invalid for failure to comply with one or more of the conditions and requirements of patentability set forth in the patent statutes, including 35 U.S.C. §§ 101, 102, 103 and/or 112.

29. Palm is entitled to declaratory judgment that one or more claims of the '971 patent are invalid.

THIRD COUNTERCLAIM

(INFRINGEMENT OF U.S. PATENT NO. 6,665,803)

30. Palm incorporates paragraphs 1-29 as if fully set forth herein.

31. On December 16, 2003, the United States Patent and Trademark Office duly and legally issued United States Patent No. 6,665,803 (the "'803 Patent") to Palm, Inc. for an

invention entitled "System and method for detection of an accessory device connection status." A true and correct copy of the '803 patent is attached hereto as Exhibit A.

32. Palm, Inc. is the sole holder of the entire right, title, and interest in the '803 Patent.

33. On information and belief, Intermec has been and is infringing, literally and/or under the doctrine of equivalents, contributing to the infringement of, and/or actively inducing the infringement of one or more claims of the '803 patent by making, using, offering for sale, selling, causing to be sold, and/or importing one or more products, including, without limitation the CN3 Mobile Computer (the "Accused Products").

34. By reason of Intermec's infringement of the '803 patent, Palm has suffered, is suffering, and will continue to suffer injury to its business and property rights, for which it is entitled to damages in an amount to be proven at trial.

35. By reason of Intermec's infringement of the '803 patent, Palm has suffered, is suffering, and will continue to suffer irreparable harm unless such acts are enjoined by the Court.

FOURTH COUNTERCLAIM

(INFRINGEMENT OF U.S. PATENT NO. 7,096,049)

36. Palm realleges and incorporates by reference Paragraphs 1-35 of this Counterclaim as if fully set forth herein.

37. On August 22, 2006 the United States Patent and Trademark Office duly and legally issued United States Patent No. 7,096,049 (the "'049 Patent") to Palm, Inc. for an

invention entitled "Wireless transaction enabled handheld computer system and method." A true and correct copy of the '049 patent is attached hereto as Exhibit B.

38. Palm, Inc. is the sole holder of the entire right, title, and interest in the '049 Patent.

39. On information and belief, Intermec has been and is infringing, literally and/or under the doctrine of equivalents, contributing to the infringement of, and/or actively inducing the infringement of one or more claims of the '049 patent by making, using, offering for sale, selling, causing to be sold, and/or importing one or more products, including, without limitation the CN3 Mobile Computer (the "Accused Products").

40. By reason of Intermec's infringement of the '049 patent, Palm has suffered, is suffering, and will continue to suffer injury to its business and property rights, for which it is entitled to damages in an amount to be proven at trial.

41. By reason of Intermec's infringement of the '049 patent, Palm has suffered, is suffering, and will continue to suffer irreparable harm unless such acts are enjoined by the Court.

REQUEST FOR RELIEF

WHEREFORE, Palm prays for judgment that:

A. Intermec's Complaint is dismissed in its entirety with prejudice;

B. Intermec is not entitled to the relief prayed for in its Complaint, or to any relief whatsoever;

C. U.S. Patent No. 5,349,678 is invalid and void against Palm;

D. U.S. Patent No. 5,349,678 has never been, and is not now, infringed by Palm or by any other person using Palm's products in this judicial district or anywhere in the United States;

E. U.S. Patent No. 5,349,678 is unenforceable against Palm;

F. U.S. Patent No. 5,568,645 is invalid and void against Palm;

G. U.S. Patent No. 5,568,645 has never been, and is not now, infringed by Palm or by any other person using Palm's products in this judicial district or anywhere in the United States;

H. U.S. Patent No. 5,568,645 is unenforceable against Palm;

I. U.S. Patent No. 5,987,499 is invalid and void against Palm;

J. U.S. Patent No. 5,987,499 has never been, and is not now, infringed by Palm or by any other person using Palm's products in this judicial district or anywhere in the United States;

K. U.S. Patent No. 5,987,499 is unenforceable against Palm;

L. U.S. Patent No. 5,468,947 is invalid and void against Palm;

M. U.S. Patent No. 5,468,947 has never been, and is not now, infringed by Palm or by any other person using Palm's products in this judicial district or anywhere in the United States;

N. U.S. Patent No. 5,892,971 is invalid and void against Palm;

O. U.S. Patent No. 5,892,971 has never been, and is not now, infringed by Palm or by any other person using Palm's products in this judicial district or anywhere in the United States;

P. No damages or royalties are due or owing by Palm for any of the acts alleged by Intermec in its Complaint; and

Q. Intermec has been and is infringing, directly or indirectly, one or more claims of the '803 Patent;

R. Intermec has been and is infringing, directly or indirectly, one or more claims of the '049 Patent;

S. Intermec, and all persons acting in concert or participation with Intermec, are permanently enjoined, pursuant to 35 U.S.C. § 283, from any further acts of infringement, contributory infringement, or inducement of infringement of the '803 and '049 Patents;

T. An accounting for damages resulting from Intermec's infringement of the '803 and '049 Patents shall be made;

U. Palm is awarded, pursuant to 35 U.S.C. § 284, damages adequate to compensate Palm for Intermec's infringement of the '803 and '049 Patents, but in no event less than a reasonable royalty, together with pre-judgment and post-judgment interest;

V. This case is an exceptional case pursuant to 35 U.S.C. § 285, and Palm is accordingly awarded its reasonable attorneys' fees incurred in this action;

W. Palm is awarded its costs (including expert fees), disbursements, and reasonable attorneys' fees pursuant to 35 U.S.C. § 285; and

X. Palm is awarded such other relief as the Court may deem appropriate, just and proper under the circumstances.

DEMAND FOR JURY TRIAL

In accordance with Fed. R. Civ. P. 38(b), Palm demands a trial by jury on all issues so triable.

OF COUNSEL:

Robert T. Haslam
Nitin Subhedar
Jaideep Venkatesan
HELLER EHRMAN LLP
275 Middlefield Road
Menlo Park, California 94025
Tel: (650) 324-7000

Robert D. Fram
Michael M. Markman
Robert J. Williams
HELLER EHRMAN LLP
333 Bush Street
San Francisco, CA 94104-2878
Tel: (415) 772-6000

POTTER ANDERSON & CORROON LLP

By: */s/ David E. Moore*
Richard L. Horwitz (#2246)
David E. Moore (#3983)
Hercules Plaza, 6th Floor
1313 North Market Street
Wilmington, DE 19801
Tel: (302) 984-6000
rhorwitz@potteranderson.com
dmoore@potteranderson.com

Attorneys for Defendant Palm, Inc.

Dated: August 10, 2007
812095 / 31950

IN THE UNITED STATES DISTRICT COURT
FOR THE DISTRICT OF DELAWARE

CERTIFICATE OF SERVICE

I, David E. Moore, hereby certify that on August 10, 2007, the attached document was electronically filed with the Clerk of the Court using CM/ECF which will send notification to the registered attorney(s) of record that the document has been filed and is available for viewing and downloading.

I further certify that on August 10, 2007, I have Electronically Mailed the documents to the following person(s):

Jack B. Blumenfeld
Rodger D. Smith, II
Morris, Nichols, Arsht & Tunnell LLP
1201 N. Market Street
Wilmington, DE 19899
JBlumenfeld@MNAT.com
rdsefiling@mnat.com

Carson P. Veach
Leland W. Hutchinson, Jr.
Jacob D. Koering
Freeborn & Peters LLP
311 South Wacker Drive, Suite 3000
Chicago, IL 60606
cveach@freebornpeters.com
lhutchinson@freebornpeters.com
jkoering@freebornpeters.com

By: */s/ David E. Moore*
Richard L. Horwitz
David E. Moore
Hercules Plaza, 6th Floor
1313 N. Market Street
Wilmington, Delaware 19899-0951
Tel: (302) 984-6000
rhorwitz@potteranderson.com
dmoore@potteranderson.com

EXHIBIT A

US006665803B2

(12) **United States Patent**
Lunsford et al.

(10) **Patent No.: US 6,665,803 B2**
(45) **Date of Patent: Dec. 16, 2003**

(54) **SYSTEM AND METHOD FOR DETECTION OF AN ACCESSORY DEVICE CONNECTION STATUS**

(75) Inventors: **Eric M. Lunsford**, San Carlos, CA (US); **Steven C. Lemke**, Sunnyvale, CA (US); **Neal A. Osborn**, Milpitas, CA (US); **Francis J. Canova, Jr.**, Fremont, CA (US); **Scott R. Johnson**, Sunnyvale, CA (US)

(73) Assignee: **Palm, Inc.**, Milpitas, CA (US)

(*) Notice: Subject to any disclaimer, the term of this patent is extended or adjusted under 35 U.S.C. 154(b) by 0 days.

(21) Appl. No.: **10/287,990**

(22) Filed: **Nov. 4, 2002**

(65) **Prior Publication Data**

US 2003/0061525 A1 Mar. 27, 2003

Related U.S. Application Data

(63) Continuation of application No. 09/298,113, filed on Apr. 23, 1999.

(51) **Int. Cl.**[7] **G06F 1/32**
(52) **U.S. Cl.** **713/320**
(58) **Field of Search** 713/320, 323, 713/340

(56) **References Cited**

U.S. PATENT DOCUMENTS

5,463,261	A	*	10/1995	Skarda et al.	307/131
5,652,891	A	*	7/1997	Kitamura et al.	713/324
5,754,436	A	*	5/1998	Walsh et al.	700/286
5,832,286	A	*	11/1998	Yoshida	307/31
5,859,970	A	*	1/1999	Pleso	370/338
6,038,457	A	*	3/2000	Barkat	455/556

* cited by examiner

Primary Examiner—Xuan M. Thai
(74) *Attorney, Agent, or Firm*—Shemwell, Gregory & Courtney LLP; Van Mahamedi

(57) **ABSTRACT**

Embodiments of this invention provide for a portable computer that determines whether an accessory device is actively connected to it. In one embodiment, the portable computer may include a signal line accessible through an output of the portable computing device. The signal line may be connected to a communication device such as a communication cradle. The portable computer may detect a signal on the signal line to determine whether the communication device is actively connected to the portable computer. If the communication device is actively connected, the portable computer suspends implementation of a time-out feature that would otherwise reduce power consumption of the portable computer.

30 Claims, 7 Drawing Sheets

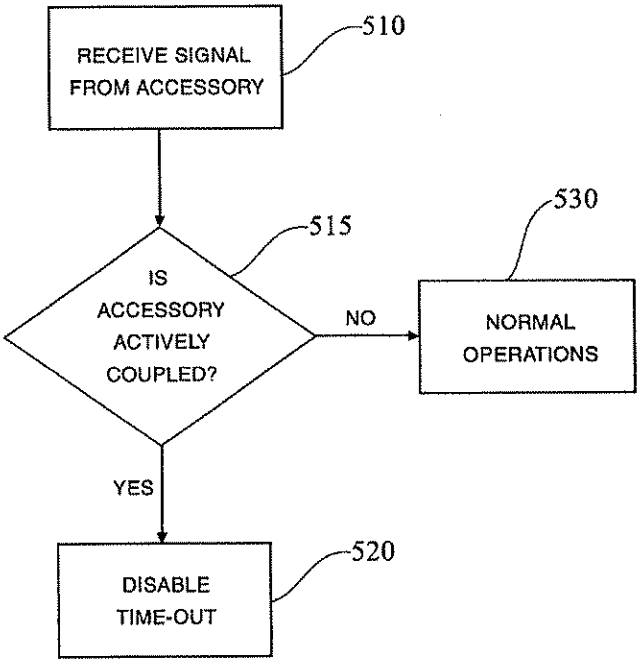

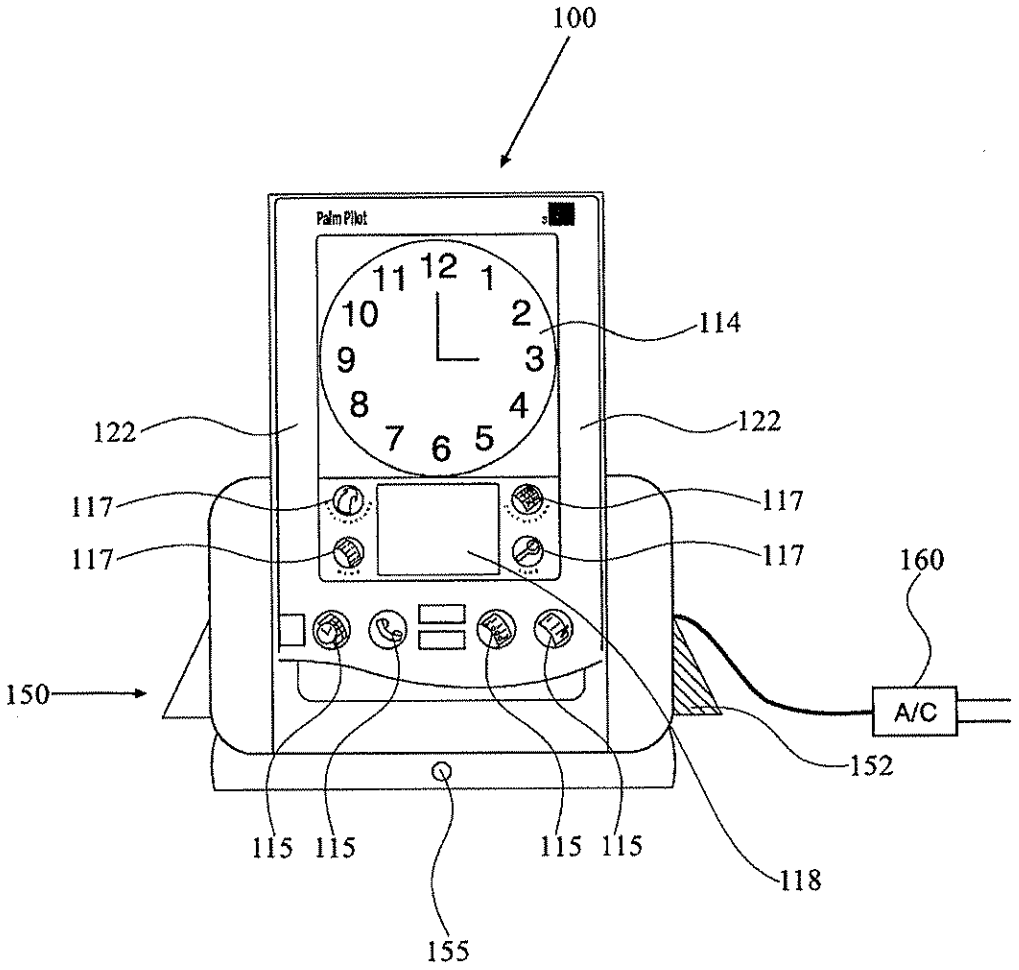
100
Palm Pilot
12
1
2
3
4
5
6
7
8
9
10
11
114
122
122
117
117
117
117
160
150
A/C
152
115
115
115
115
118
155

FIG. 1

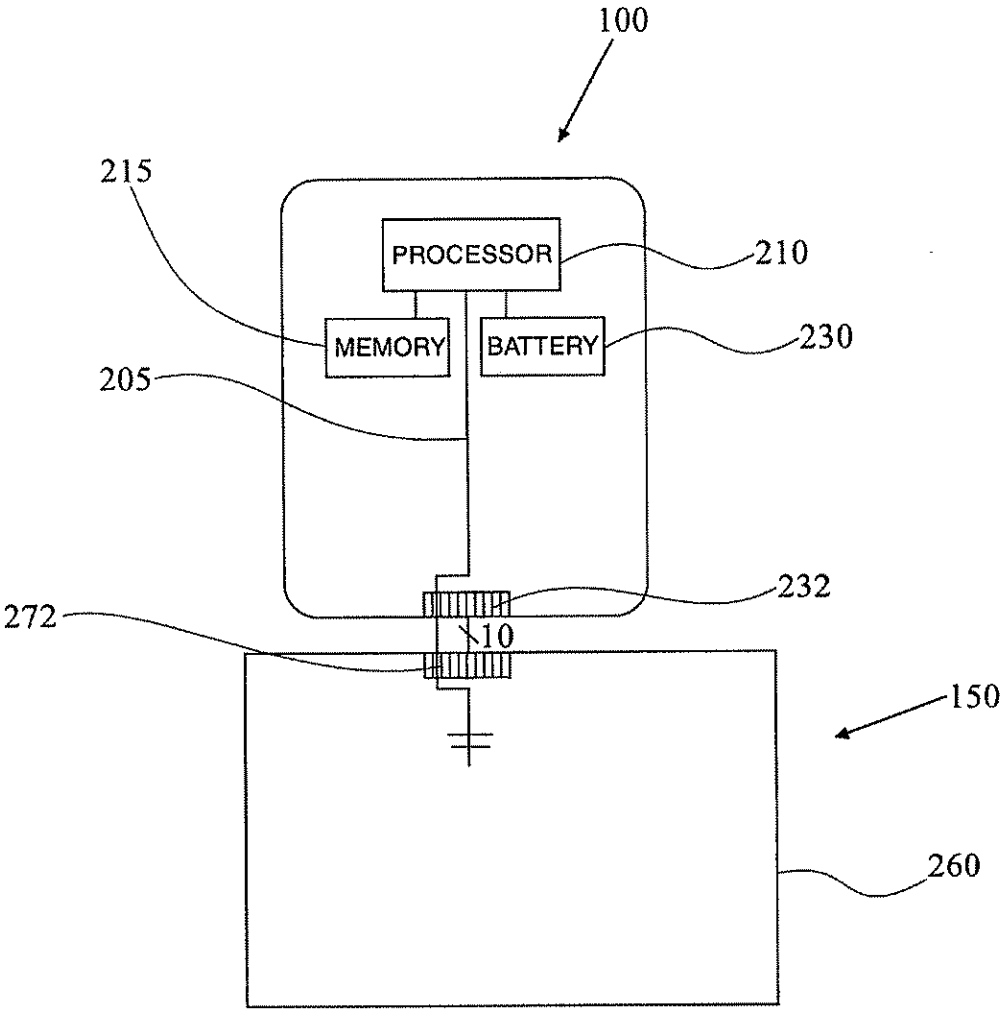
100
215
PROCESSOR
210
MEMORY
BATTERY
230
205
232
272
10
150
260

FIG. 2

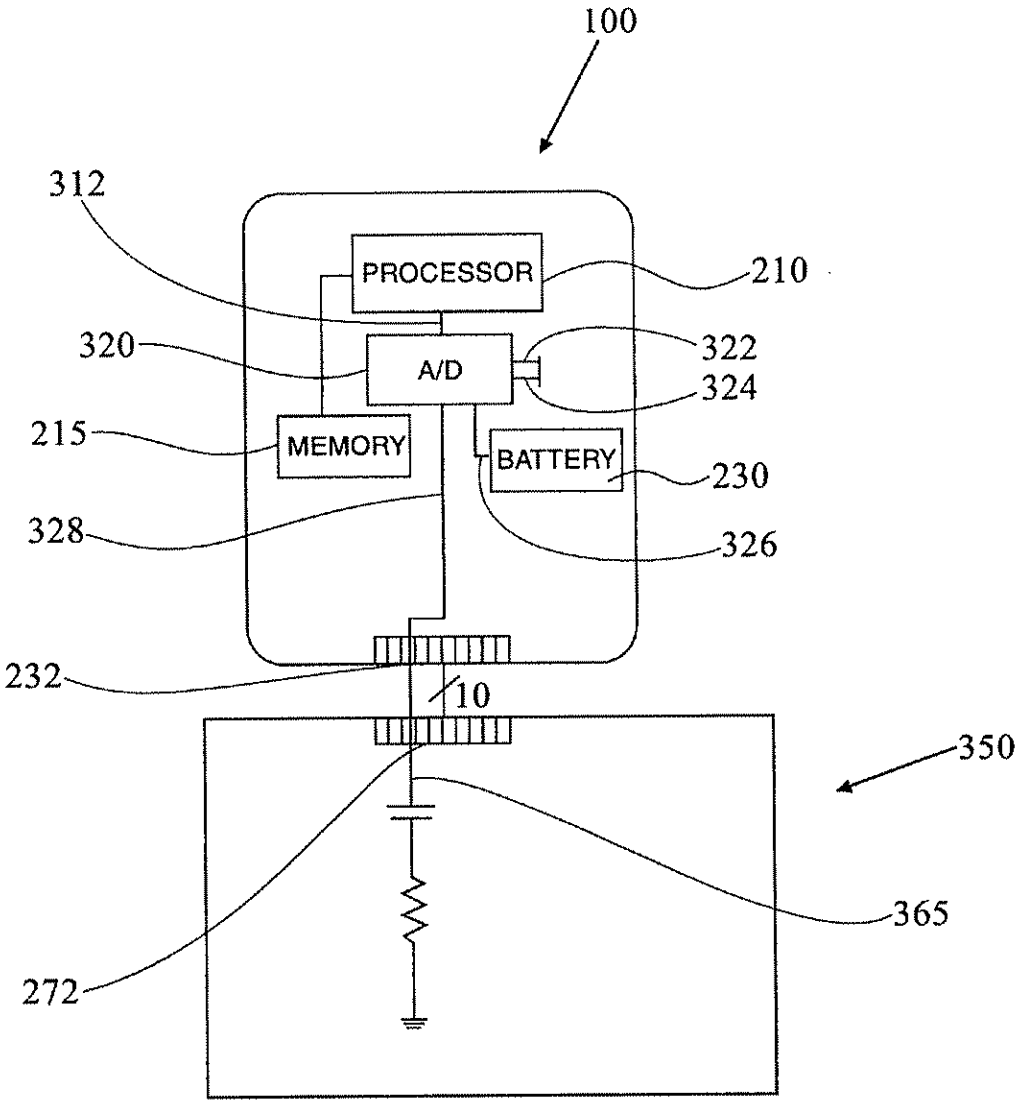
100
312
PROCESSOR
210
320
A/D
322
324
215
MEMORY
BATTERY
230
328
326
232
10
350
365
272

FIG. 3

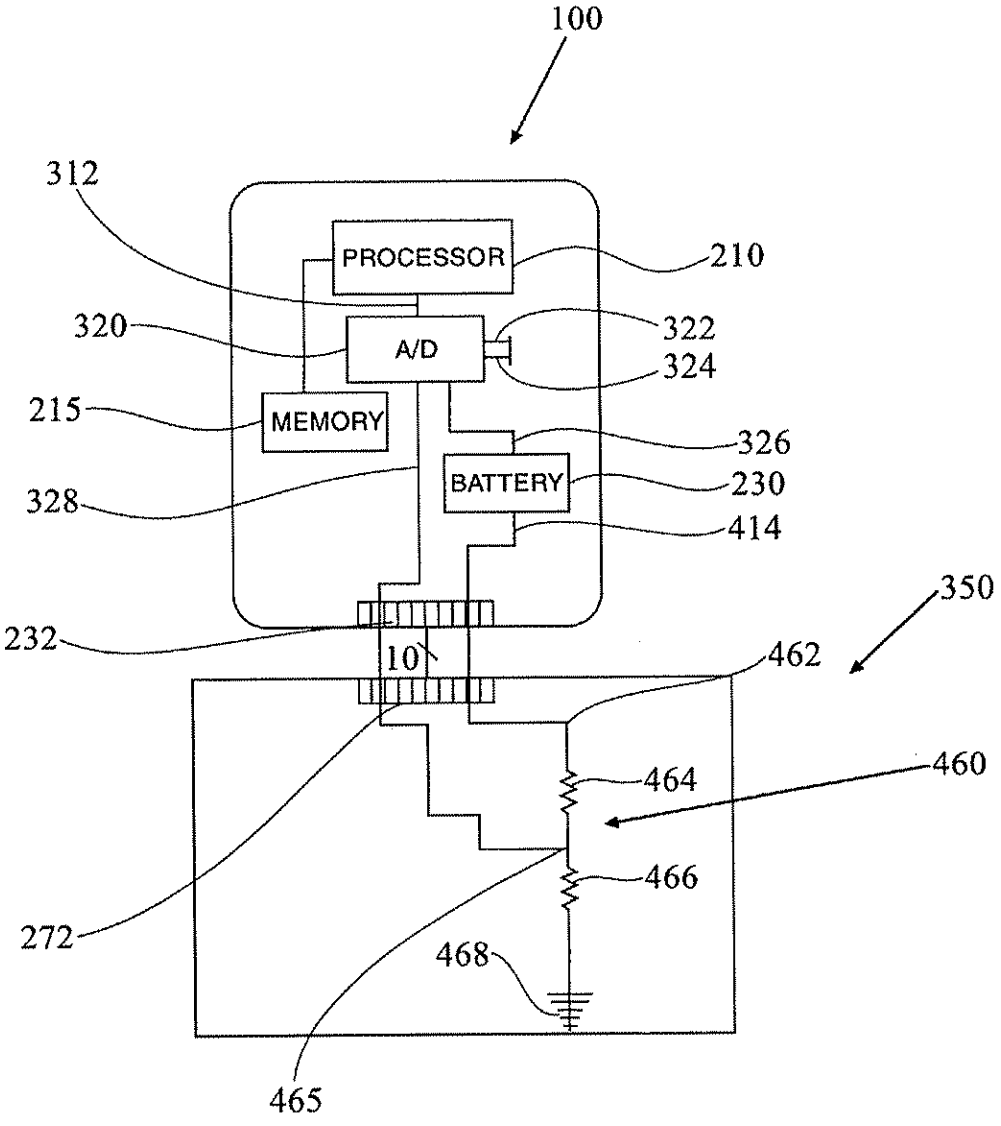
100
312
PROCESSOR
210
320
A/D
322
324
215
MEMORY
326
BATTERY
230
328
414
350
232
10
462
460
464
466
272
468
465

FIG. 4A

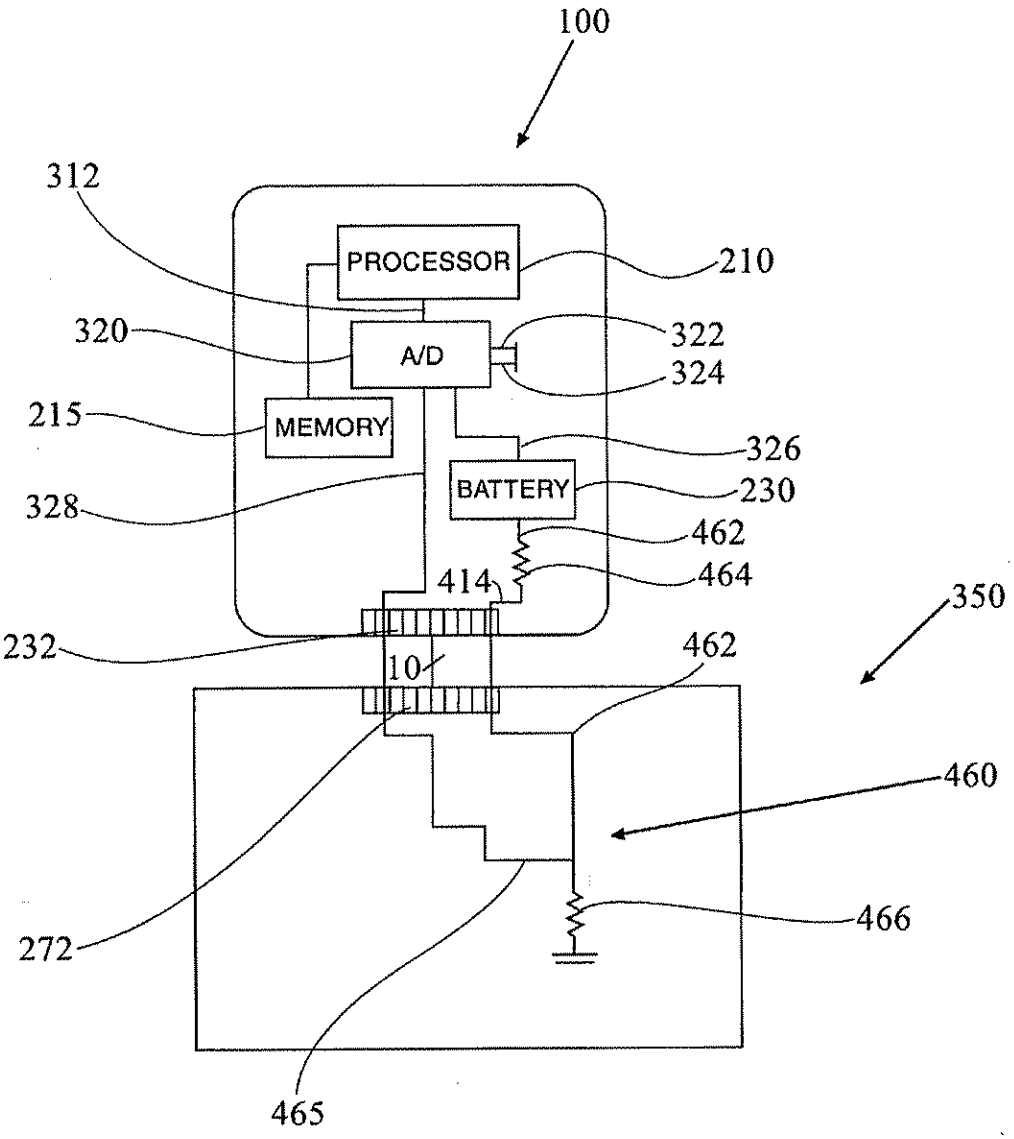
100
312
PROCESSOR
210
320
A/D
322
324
215
MEMORY
326
BATTERY
230
328
462
464
414
350
232
10
462
460
272
466
465

FIG. 4B

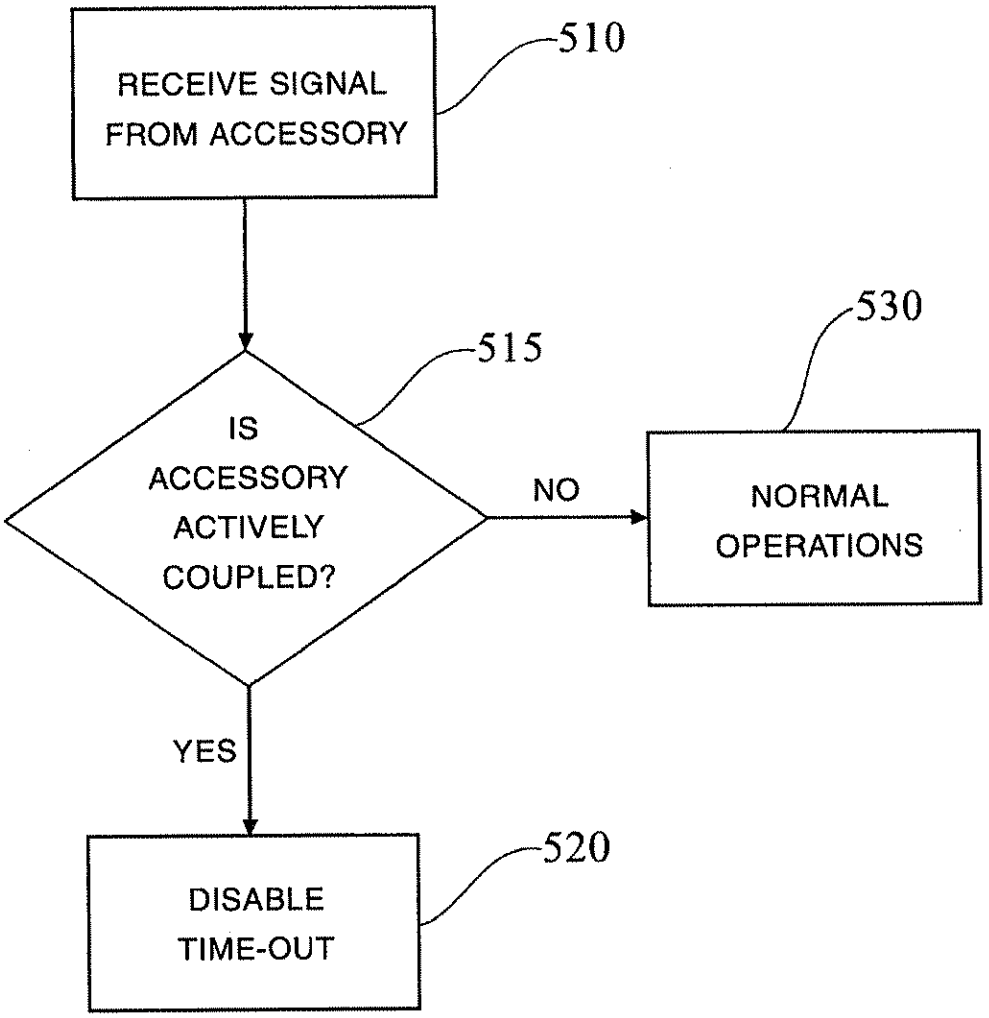
RECEIVE SIGNAL FROM ACCESSORY
510
IS ACCESSORY ACTIVELY COUPLED?
515
NO
530
NORMAL OPERATIONS
YES
DISABLE TIME-OUT
520

FIG. 5

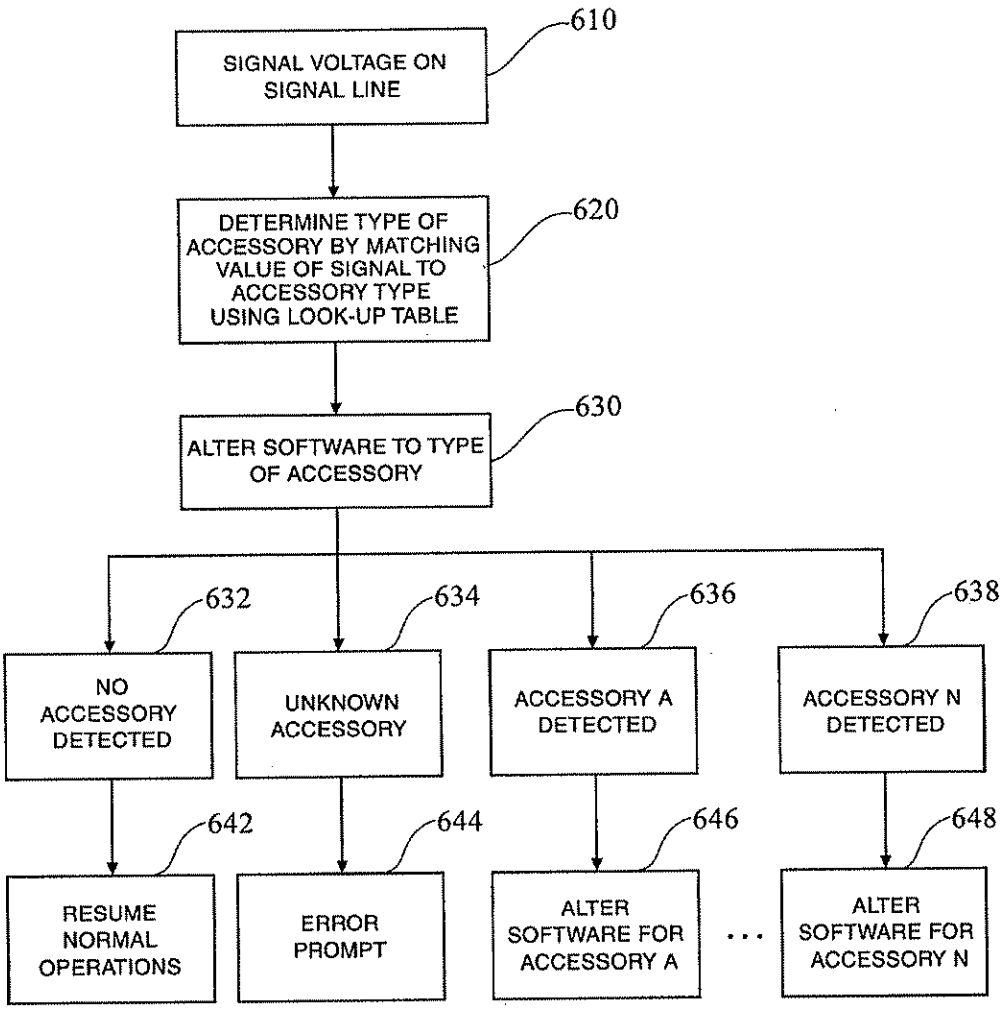
610
SIGNAL VOLTAGE ON SIGNAL LINE
620
DETERMINE TYPE OF ACCESSORY BY MATCHING VALUE OF SIGNAL TO ACCESSORY TYPE USING LOOK-UP TABLE
630
ALTER SOFTWARE TO TYPE OF ACCESSORY
632
634
636
638
NO ACCESSORY DETECTED
UNKNOWN ACCESSORY
ACCESSORY A DETECTED
ACCESSORY N DETECTED
642
644
646
648
RESUME NORMAL OPERATIONS
ERROR PROMPT
ALTER SOFTWARE FOR ACCESSORY A
...
ALTER SOFTWARE FOR ACCESSORY N

FIG. 6

SYSTEM AND METHOD FOR DETECTION OF AN ACCESSORY DEVICE CONNECTION STATUS

This application is a continuation application of Ser. No. 09/298,113, filed Apr. 23, 1999, entitled SYSTEM AND DETECTION OF AN ACCESSORY DEVICE CONNECTION, and is incorporated herein by reference in its entirety.

BACKGROUND OF THE INVENTION

1. Field of the Invention

This invention pertains to a portable computing device. More specifically, embodiments of this invention provide for detecting and/or determining a type of an accessory device connected to a portable computing device.

2. Description of the Related Art

Portable computers such as laptop and handheld computers may be provided with additional capabilities through the use of accessory devices. The accessory devices may electrically couple to a processor of the portable computer to provide communication capabilities and external power. Accessory devices in general have been used to add functions and resources to portable computers to compensate for inherent limitations arising from their size and mobility. Previous accessory devices have been used to provide, among other things, an alternating current (A/C) supply, serial and parallel ports, modems, additional memory, and universal serial ports. The portable computer may use accessory devices to communicate with larger computers and data networks.

Portable computers are typically equipped with a time-out feature that turns the computer off after a predetermined duration of inactivity. The time-out feature is designed to preserve battery life. While the time-out feature may be necessary when the portable computer is operating from an internal battery source, accessory devices may supply an A/C converter to the portable computer to eliminate the need for the time-out feature. However, previous portable computers provide for the time-out feature to be enabled so that the portable computer switches off after a period of inactivity, even if the accessory device is supplying external power. Still, other portable computers, such as Zaurus™ personal digital assistant manufactured by the Sharp Corp. and PalmPilot™ organizers manufactured by the 3Com Corp., disable the time-out feature only when an A/C power adapter is supplied to a power terminal of the portable computer.

These devices do not disable the time-out feature when an accessory device such as a communication cradle is connected to the portable computer through a communications port. In such instances, the time-out feature can be limiting and a nuisance to the user by precluding, for example, use of programs that require minimal user interaction. Therefore, there is a need for enabling the portable computer to detect whether an accessory device supplying external power is actively connected to the portable computer.

Furthermore, a number of different types of accessories are available for use with portable computers. However, previous portable computers are not equipped to automatically determine the type of accessory device that is actively connected to the portable computer. Without this ability, the user is required to perform additional software functions to identify the particular accessory device for the portable computer. In addition, the portable computer may accidentally execute an application for an accessory device other than the one being used. In certain applications, this can be harmful to the portable computer and/or the accessory device. For example, the PalmPilot III™ may access a modem accessory device by executing a software application configured only for modem devices. In some instances, the software application may be damaging if the accessory device connected to the portable computer is erroneously identified as a modem device. Therefore, there is a need for enabling the portable computer to automatically determine the type of the accessory actively connected to it.

These and other shortcomings of previous portable computers will be addressed by various embodiments of this invention.

SUMMARY OF THE INVENTION

Embodiments of this invention provide for a portable computer that determines whether an accessory device is actively connected to it. In one embodiment, the portable computer may include a signal line accessible through an output of the portable computing device. The signal line may be connected to a communication device such as a communication cradle. The portable computer may detect a signal on the signal line to determine whether the communication device is actively connected to the portable computer. If the communication device is actively connected, the portable computer suspends implementation of a time-out feature that would otherwise reduce power consumption of the portable computer.

Embodiments of this invention eliminate time constraints present in previous devices that require the user to periodically interact with the portable computer in order to sustain its operation. As a result, the portable computer may operate programs continuously by connecting to an accessory device such as a communications cradle through a communications or output port. In this way, when the portable computer is connected to the communication device, the portable computer may continuously display, for example, a clock, photographs, or calendars.

BRIEF DESCRIPTION OF THE FIGURES

FIG. **1** illustrates a portable computing device that may incorporate an embodiment of the invention.

FIG. **2** is a schematic of an embodiment of this invention for detecting an accessory device actively connected to a portable computing device.

FIG. **3** is an embodiment of this invention for detecting a type of an accessory device connected to the portable computing device.

FIG. **4A** is another embodiment of this invention for detecting a type of an accessory device connected to the portable computing device.

FIG. **4B** is another embodiment of this invention for detecting a type of an accessory device connected to the portable computing device.

FIG. **5** is a flowchart of an algorithm for detecting a communication device actively connected to the portable computing device.

FIG. **6** is a flowchart of another algorithm for determining a type of an accessory connected to the portable computing device.

DETAILED DESCRIPTION

An embodiment of this invention provides for detecting a type of accessory device connected to a portable computer.

The portable computer then implements software to accommodate the specific accessory device detected. Another embodiment of this invention provides for detecting whether a communication accessory, such as a communication cradle, is actively connected to the portable computer. The portable computer then suspends a time-out feature, as the communication device supplies external power to the portable computer.

This disclosure initially describes a portable computer and accessory device for use with various embodiments of the invention, including user features of the portable computer that may be affected or altered. In FIG. **2** and accompanying text, the disclosure describes hardware for detecting whether an accessory device is connected to the portable computer. In FIGS. **3**, **4A**, and **4B** and text accompanying these figures, the disclosure describes embodiments for detecting the type of accessory device connected to the portable computer. In FIG. **5** and accompanying text, an algorithm is presented for detecting whether the accessory device is actively connected to the portable computer. In FIG. **6** and accompanying text, an algorithm is described for detecting an accessory type connected to the portable computer.

In an embodiment of this invention, the portable computer includes three modes of operation. For purpose of this disclosure, an "on-mode" is a mode in which a processor of the portable computer is fully operational. A "doze-mode" is a mode in which a processor is operating fewer functions to conserve energy. For example, in the doze-mode, a display may be on, but a user may experience a pause between the time an input in entered and processed. In the "sleep-mode", the portable computer is in its lowest state of power consumption, where the display is off and a processor is performing minimal functions such as time-keeping.

For purposes of this description, a computer is a combination of a processor and a memory. A portable computer is a computer having a portable energy resource. Handheld computers are portable computers designed to be held with one hand.

Portable Computer and Accessory Device

With reference to FIG. **1** an embodiment of this invention includes a portable computer **100** and an accessory device. Preferably, the portable computer **100** has interactive hardware and software that perform functions such as maintaining calendars and phone lists. The portable computer **100** shown in FIG. **1** includes a plurality of input functions keys **115** and a display **114** having graphic user interface features. The display **114** may be provided with an interface that allows the user to select and alter displayed content using a pointer such as a stylus. In an embodiment, the display **114** also includes a Graffiti™ writing section **118** for tracing alphanumeric characters as input. A plurality of application buttons **117** for performing automated or pre-programmed functions may be provided on a portion of the display **114**. The portable computer **100** may also include an antenna for receiving wireless communications. An example of a suitable portable computer **100** for use with embodiments of this invention include handheld computers such as PalmPilot™, Palm III™, Palm IV™, Palm V™ organizers, manufactured by the 3Com Corporation. Other embodiments of the invention can include Windows CE™ portable computers, or other handheld computers and personal digital assistants.

The stylus for inputting information onto the display **114** may slideably mount to a rail (not shown) on one of the lateral sides **122** of the portable computer **100**. In an embodiment, the rail may be provided with logic and electromechanical switches to perform functions based on the movement and position of the stylus. The rail may provide an "on/off" function, where removal of the stylus activates the portable computer **100** for user operation. For example, removal of the stylus may actuate a switch (not shown) implemented with the rail to activate the portable computer **100**. The switch may be formed from an electromagnetic coupling between a metal stylus and a conductive element on the rail, where removal of the stylus forces a current. In another embodiment, a spring having a conductive surface may biasly obstruct the path of the stylus along the rail, so that removal of the stylus alters the length of the spring to close the switch.

As will be further described, the accessory device may include a plug-in communication cradle **150** having a parallel port for data transfer with a data network or another computer. Other embodiments may provide for another type of accessory device that equips the portable computer **100** with, for example, serial communication abilities as provided by a modem device or Universal Serial Bus (USB) cradle. The communication cradle **150** includes a stand **152**, and an A/C adapter **160** that extends electricity from an external socket to power the portable computer **100**. The communication cradle **150** also includes one or more ports for parallel and/or serial data transfer with other computers or data networks. The portable computer **100** may use the communication cradle **150** for the purpose of downloading and uploading software, and for synchronizing data on the portable computer **100** with a personal computer (not shown, but may be included or used with some embodiments of the invention). The communication cradle **150** couples to the portable computer **100** through a connector (see FIGS. **2–4**) of the stand **152**. A button **155** may effectuate an electrical connection between the communication cradle **150** and the portable computer **100** when the two are connected.

In an embodiment, the portable computer **100** includes hardware and/or software to detect whether the communication cradle **150** is actively connected to the portable computer **100**. One advantage provided by this embodiment is that software on the portable computer **100** may be altered and/or reconfigured to optimize functions of the portable computer **100** according to whether the accessory device is actively connected. In this way, the portable computer **100** may launch programs that are practical only when external power is available. FIG. **1** shows that the portable computer **100** may, for example, run a program to continuously display a world-clock on the display **114** when the communication cradle **150** is detected. Importantly, in this example, the type of accessory device indicates that the power is being supplied from an external source so leaving the portable computer **100** does not drain the battery.

The portable computer **100** also accommodates alternative types of accessory devices, such as a modem port or a USB cradle. An embodiment of the portable computer **100** under this invention may include resources to detect a type of accessory, and may further alter or reconfigure software to accommodate the specific accessory type without requiring user input. This feature safeguards against the portable computer **100** being prompted to execute an application for the wrong accessory device. For some accessory devices such as USB cradles, the accessory device may be damaged if the portable computer executes an application for another type of accessory device such as a modem port. This invention provides that the portable computer **100** will run the correct application for a particular accessory type. For example, the portable computer **100** will not execute the modem application if the accessory device is a USB device or cradle. In this manner, the portable computer **100** may implement software for a particular accessory type with

minimal user attention, while precluding the possibility of running a program for the wrong accessory device.

Detecting an Accessory Device

FIG. **2** is an illustrative block diagram showing additional details of an embodiment of the portable computer **100** connected to communicate with an exemplary accessory device. In the embodiment shown by FIG. **2**, the accessory device is the plug-in communication cradle **150** having a parallel communication port for coupling the portable computer **100** to an external processor. The communication cradle includes an integrated A/C adapter for operating the portable computer **100** independent of an internal battery source.

With further reference to the embodiment of FIG. **2**, the portable computer **100** includes a processor **210**, a memory, and a battery source **230**. Preferably, the processor **210** is a Motorola EZ Dragonball **328**™ processor, and the memory **215** is a separate component that provides Random Access Memory (RAM). The battery source **230** internally powers the processor **210** and memory **215**, as well as other electrical components within the portable computer **100**. The battery source **230** may be standard disposable batteries, or rechargeable such as Lithium-ion batteries. The portable computer **100** also includes a communication port **232** having a pin connector for coupling to a mating pin connector accessible in an output port **272** of the communication cradle **150**.

The processor **210** extends a signal line **205** to a pin element of the pin connector of the output port **272**. The portable computer **100** and communication cradle **150** may electrically connect using only some of the pin elements of the respective pin connectors. For example, the communication port **232** may include a ten pin male connector, where nine pins are designated for functions such as parallel data transfer, parity, and "hot sync" functions for coupling the portable computer **100** with another computer. One remaining pin is available for coupling without affecting the remaining pins. The example shown in FIG. **2** couples the available pin to the signal line **205**. In one configuration, the signal line **205** and the available pin are initially pulled high using a pull-up resistor. When the pin connector is mated to electrically connect with the communication cradle **150**, the pin and signal line **205** are pulled low. The change in voltage on the signal line **205** signals the processor **210** that an electrical connection between the communication cradle **150** and portable computer **100** is established. The processor **210** may then execute a program based on the accessory device being actively connected to the portable computer **100**.

The programs executed by the processor **210** include certain software applications that preserve battery resources. The portable computer **100** may have a time-out feature designed to significantly reduce the power consumption of the device when the portable computer is inactive or not in use. In general, the time-out feature operates by switching the portable computer **100** from a state of high power consumption to a state of low power consumption when the portable computer detects inactivity for a predetermined duration of time.

Portable computers typically use some power at all times for the purpose of maintaining a clock, memory etc. Therefore, the portable computer **100** may include multiple states of power consumption, rather than just the "on" and "off" mode. The states of the portable computer may include the "doze-mode" in which the display **114** is powered, but some resources within the portable computer **100** have stopped. The states of the portable computer **100** may also typically include a "sleep-mode", where the portable computer **100** is consuming significantly less power, but performing a few limited functions such as maintaining the clock.

The time-out feature provides that the portable computer **100** enters a state of low power consumption such as the sleep-mode if the processor **210** is substantially inactive after a predetermined time-period. For example, the known art provides that the portable computer **100** may time-out into the sleep-mode when user activity ceases for more than two minutes. In devices such as PalmPilot™ organizers, the time-out feature may be programmed by the user to vary between one and three minutes.

In an embodiment of the invention, a change in voltage on the signal line **205** may signal the processor **210** to alter a portion of a program and execute code for suspending or prolonging the occurrence of the time-out feature. In one embodiment of this invention, the portable computer **100** has a switch to alternatively allow the user to selectively override the normal behavior of the time-out function when the communication cradle **150** is active. The portable computer **100** may also detect the change in the voltage on the signal line **205** for the purpose of informing the user that the communication cradle **150** is actively connected.

One advantage of suspending the time-out feature includes allowing the user to continually access the portable computer **100** without having to switch it on.

Disabling the time-out feature, or otherwise modifying the time-out feature, also allows the portable computer **100** to be optimized for certain software applications that either require minimal user interface or require proportionately greater amounts of power. Examples of such applications include energy intensive software programs that have functions outside traditional function such as of maintaining a calendar and phone numbers. For example, the portable computer **100** may include software for displaying digital photographs. Suspending the time-out feature enables the portable computer **100** to be used as a picture frame. Other examples of software applications that may be launched when the portable computer **100** has access to plug-in power include games, a world clock display, or a computer desktop companion. Suspending the time-out feature may also be used to execute applications that continuously communicate with and/or display information from a data network. Such applications may be used to display information such as a stock market ticker.

In another embodiment of the invention, the change in voltage on the signal line **205** resulting from coupling the communication cradle **150** may signal the processor **210** to alter a portion of a program for suspending or prolonging a time-out for a backlight display. Previous portable computers provide for the software control program to turn the backlight off to conserve battery power. In this embodiment, the backlight may be continuously powered when the processor **210** detects the communication cradle **150**. Alternatively, the backlight can be selectively turned on or off independent of the display screen when the processor **210** determines that the communication cradle **150** is electrically connected to the portable computer **100**.

By detecting whether an accessory device is actively connected, the processor **210** may also alter or reconfigure software to provide an alternative software arrangement for routine uses of the portable computer **100**. For example, the processor **210** may be programmed to interpret the presence of an actively connected communication cradle **150** as representing a "home" position. In response to detecting an actively connected communication cradle **150**, the processor **210** may alter or reconfigure the software to more readily

accommodate a home default position. The software may, for example, be altered to redisplay a database in a new order. Accordingly, the portable computer **100** may list personal phone numbers as a default file in a menu, and list home finances as a default in a spreadsheet application, and display only "to-do" tasks such as household chores. Then, when the portable computer **100** and the accessory device are not electrically connected the processor may run software for a professional setting, including listing professional numbers and calendar items.

Detecting a Type of an Accessory Connected to the Portable Computer

FIG. **3** is a block diagram schematic of another embodiment of this invention where a portable computer is equipped to distinguish different types of accessories. In this embodiment, the portable computer **100** includes the processor **210**, analog-digital (A/D) converter **320**, and the battery source **230**. The portable computer **100** also includes a memory **215** connected to the processor **210**. The processor **210** is preferably a Motorola EZ Dragonball **328**™ that is connected to the A/D converter **320** via an 8-bit connection **312**. The A/D converter **320** preferably includes four channels. A first and second channel **322** and **324** of the A/D converter **320** are dedicated for display operations. A third channel **326** couples to the battery source **230**. In this embodiment, a fourth channel of the A/D converter **320** is used as a signal line **328** to extend to a communication port **232** of the portable computer **100**. The A/D converter **320** couples to the battery source **230** via the third channel **326** to receive a reference voltage for a comparator (not shown) incorporated within the A/D converter **320**. The communication port **232** may include a male pin connector for coupling and electrically connecting with an accessory device.

In the embodiment of FIG. **3**, an accessory device **350** provides a constant voltage on an output node **365**. The accessory device may be one of several devices, including the communication cradle (shown by numeral **150** in FIG. **1**), modem devices and USB cradles. The output node **365** of the accessory device **350** is accessed through an output port **272** to the pin connector for the communication port **232**. Previous systems provide for coupling the portable computer **100** and accessory device **350** using only some of the pin elements of the **10**-pin connector. As mentioned in the embodiment of FIG. **2**, the communication port **232** provides a male pin connector with nine pins designated for functions such as parallel data transfer and parity, and one pin being left available for alternative uses. Each type of accessory device may be assumed to have a unique constant voltage on a corresponding output node that is accessible by the portable computer **100** through the communication port **232**. Therefore, one improvement provided by some embodiments of this invention includes coupling the available pin between the A/D converter **320** and the output node of an accessory device for the purpose of detecting and distinguishing accessory devices from each other.

In an embodiment, the A/D converter **320** receives a reference voltage from the battery source **230**, and an input signal from the signal line **328** extending through the available pin of the communication port **232**. The A/D converter **320** may then (1) determine whether an accessory device is actively connected to the portable computer **100** via the communication port **232**, as described in FIG. **2**; and/or (2) determine the type of accessory device being electrically connected to it.

The portable computer **100** and the accessory device **350** may be connected so that the signal line **328** electrically contacts a mating pin in the output port **272** of the accessory device **350**. When the accessory device **350** is powered, a voltage is provided on the output node **365** and to the signal line **328**. The voltage on the signal line **328** is detected by the A/D converter **320**. A comparator within the A/D converter **320** compares the voltage on the signal line **328** with the reference voltage supplied from the battery source **230** via the third channel **326**. The A/D converter **320** can signal the memory **215** for the purpose of matching the voltage on the signal line **328** with a type of accessory. The voltages on the output node **365** of each type of accessory device may be predetermined and stored in a look-up table of the memory **215**. Therefore, the look up may list accessory types according to the voltage on a corresponding output node of each accessory type. Once the memory **215** is signaled, the processor **210** may execute software to match the voltage on the signal line **328** with a type of accessory using the look-up table. For example, a modem port may provide a voltage on an output node that is distinguishable from a voltage on an output node of a communication cradle, such as the one shown in FIG. **1**. Similarly, a USB cradle or device provides an output node having a distinguishable voltage from the modem port or cradle.

Distinguishing between accessory devices in this manner enables the portable computer **100** to select or alter programming to accommodate one device over another in a quick and cost efficient manner. For example, the portable computer **100** can immediately detect the presence of the USB cradle and alter software to accommodate the USB cradle. This alteration to the software can be done when the portable computer is in a doze-mode, so that the user has quicker access to functions available from coupling the USB device. In another example, the portable computer **100** may be used to preclude inadvertent detection of a modem port, because transmitting or altering programs for a modem port that is not existent can be damaging to the system.

FIG. **4A** is a block diagram schematic of another embodiment in which a portable computer **100** is equipped to determine the type of accessory actively connected to it. In this embodiment, the portable computer **100** includes a processor **210**, a memory **215**, an analog-digital (A/D) converter **320**, and a battery source **230**. As with the previous embodiment, the processor **210** is preferably a Motorola EZ Dragonball™ **328** that is connected to the A/D converter **320** using an 8-bit connection **312**. The memory **215** may store a look-up table similar to the embodiment of FIG. **3**. The A/D converter **320** preferably includes four channels. A first and second channel **322** and **324** of the A/D converter **320** are dedicated for display operations. A third channel **326** couples to the battery source **230**. A fourth channel of the A/D converter **320** is used as a signal line **328** to extend to a communication port **232** of the portable computer **100**. The A/D converter **320** couples to the battery source **230** via the third channel **326** to receive a reference voltage for a comparator (not shown) incorporated within the A/D converter **320**. The communication port **232** also a male pin connector for coupling and electrically connecting with the accessory device **350**.

The accessory device **350** includes a voltage divider **460**, and an output port **272** for mating with the portable computer **100**. As with previous embodiments, the accessory device **350** may include one of many devices, including a communication cradle **150**, modem device, or USB cradle. The output port **272** includes a mating pin connector for the communication port **232**. The voltage divider **460** includes an input node **462**, a first resistor series **464**, and a second resistor series **466**. One end of the second resistor **466** series

is tied to ground **468**. An output node **465** is extended between the first resistor series **464** and the second resistor series **466**. The output node **465** extends a voltage to a corresponding pin slot on the output port **272**. In this embodiment, a voltage of the input node **462** is tied to the battery source **230** of the portable computer **100** via a line **429**.

The embodiment of FIG. **4**A provides that the battery source **230** to feed the reference voltage to both the A/D converter **320** and to the input of the voltage divider **460**. In this way, the voltage on the output node **465** may be adjusted to account for fluctuations to the reference voltage supplied to the A/D converter **320**. This enables the A/D converter **320** to more accurately detect the voltage on the output node **465**. Additional precision in determining the voltage in turn allows for a larger and more accurate match between detected voltages and corresponding device types. In this manner, the embodiment of FIG. **4**A may be employed to distinguish among different accessory types similar to previous embodiments, but more accurately matches the voltage on the signal line **328** with the matching accessory type. Employing an 8-bit A/D converter **320** in this manner allows for up to 256 different accessory types to be matched to a distinct voltage on the signal line **328**.

FIG. **4**B is an embodiment similar to FIG. **4**A except that the voltage divider **460** is now distributed between the portable computer **100** and the accessory device **350**. In this embodiment, the voltage of the output node **465** may be determined based on a resistor series contained within the accessory device **350** that is tied to ground. The input node **462** and the first resistor series **464** couple to the battery source **230** within the portable computer **100**. A voltage line **414** passes from the first resistor series **464** through the communications port **232**, the output port **272** and into the accessory device **350**. The voltage line **414** couples with a second resistor series **464** connected to ground **468** that forms the voltage divider **460**. The voltage line **414** may be passed through one of the pin elements of the pin connectors used to couple the portable computer **100** and accessory device **350**, such as the second pin shown in FIG. **2**. FIG. **4**B represents an alternative configuration in which the accessory device supplies a voltage from the battery source to produce a distinguishable voltage on the output node **465**. Since the input voltage provided to the accessory device **350** is the same as the reference voltage to the A/D converter **320**, the A/D converter is able to better distinguish between voltages on the output node **465**.

Algorithm for Detecting an Accessory Device

FIG. **5** is a flowchart showing the steps by which a portable computer device such as the one shown in FIG. **2** operates depending on whether an accessory device such as the communication cradle **150** is actively connected to it. In an embodiment of this invention, the algorithm described herein may be implemented with the portable computer **100** and the communication cradle **150** supplying the portable computer **100**. The communication cradle **150** described with this embodiment is intended to only be an exemplary accessory device that provides communication abilities and external power to the portable computer **100**.

In step **510**, the portable computer **100** receives a signal from the communication cradle **150**. This step may be accomplished by signaling to the processor **210** the voltage on the signal line **205**. In step **515**, the processor **210** determines whether the communication cradle **150** is actively connected to the portable computer **100**. This is preferably determined by a voltage on the signal line **205** being either high or low. In a corresponding embodiment, the signal line **205** floats high and is pulled low when actively connected. Under this configuration, the processor **210** determines that the communication cradle **150** is actively connected when the voltage on the signal line **205** is low.

If an accessory is detected, the portable computer **100** in step **520** alters programming of the software to disable the time-out. To accomplish this step, the processor **210** may execute programming to suspend or delay the time-out feature from turning the portable computer to a state of reduced power consumption. If an accessory is not detected, step **530** shows that the processor **210** will resume normal operations, in which case the portable computer **100** turns off after a pre-programmed duration in which the time-out feature becomes effective.

Algorithm for Detecting a Type of an Accessory Device

FIG. **6** is a flowchart showing the steps by which a portable computer device such as the one shown in FIGS. **3**–**4** determines the type of accessory device that is actively connected to it. For descriptive purposes, components used to describe the flowchart may be referenced with respect to the assembly shown by FIG. **4**, so that the algorithm may be implemented with the portable computer **100** and any one of the accessory devices disclosed herein, including the communication cradle **150**, modem device, and USB cradle.

In step **610**, the signal from the accessory device is measured. This may be accomplished using the A/D converter **320** to measure the voltage value of the signal on the signal line **328**.

In step **620**, the algorithm determines the type of accessory by matching the signal value to the accessory type, by for example, using a look-up table. The A/D converter **320** may determine the voltage in counts, and the processor **210** then compares the counts to values stored in the look-up table. The look-up table is preferably stored in the memory **215**. In step **620**, the processor **210** performs steps of a program according to the type of accessory being connected to the portable computer **100**. For example, the comparator will run a modem application if a modem is detected by the signal line **328**, or disable the time-out feature if the communicator cradle **150** is detected.

The portable computer **100** may detect any one of n accessory types, where n represents the number of voltage counts that the A/D converter can detect. With an 8 bit connection between the A/D converter **320** and the processor **210**, the A/D converter may be used to detect up to 256 different types of accessories. Other "types" of accessories that may be recognized by the portable computer **100** include "no accessory", and an "unknown accessory". A possible step **632** shows, for example, that if the voltage count is 0, then no accessory is detected. The portable computer then resumes normal operations in step **642**, which assumes battery operation with no accessory device.

The processor **210** may alternatively execute step **634**, which shows an "unknown" type of accessory for when the voltage determined by the A/D does not match to a corresponding type of accessory in the look-up table. Subsequently, step **644** shows that an error message is then displayed to notify the user that the accessory device does not match the portable computer **100**.

The processor may determine, in step **636**, that a first type of accessory device is actively connected to the portable computer **100**. As shown by step **646**, the processor **210** in step **646** alters the software by performing steps that accommodate the particular type of accessory. In possible steps **638** and **648**, the processor **210** detects from one of other types of accessories, and program the portable computer to accommodate the particular accessory.

This invention is intended to encompass an embodiment combining the steps shown in FIGS. **5** and **6**. Therefore, under an embodiment of this invention, a portable computer may determine first whether an accessory device is connected to it, and next determine the type of accessory device that is connected.

Alternative Embodiments

Several variations and additional features may be incorporated in embodiments of this invention.

For setting software depending on whether an accessory device such as a communication cradle is actively connected to the portable computer, a switch may be provided that switches the voltage on the signal line from high to low or vice versa. The switch may be used to set a software arrangement for routine uses of the portable computer. In an embodiment, the switch may be used to distinguish between identical communication cradles, where one of the communication cradles is used for a first operational environment, and another of the communication cradles is used for another operational environment. Therefore, a user may assign one of the communication cradles to represent the "home" position, where data is arranged to prioritize personal information over professional information. Similarly, the switch may distinguish the other communication cradle to represent a "work" position, where the data arrangement prioritizes professional information.

In an embodiment of the invention, software on the portable computer **100** may be configured or set to accommodate a particular type of accessory device connected to the portable computer **100** even when the portable computer is a sleep-mode. For example, a modem device may be connected to the portable computer **100** in a sleep-mode. The portable computer **100** detects the voltage on the signal line and sets a data value based on the modem device. When the portable computer **100** is subsequently switched to an "on" or "doze" mode, the portable computer immediately makes the modem device available. Minimizing access time in this manner may provide significant advantages to portable computer s incorporating this embodiment of the invention, in that use of the portable computer is often intermittent and for relatively short durations.

Conclusion

The foregoing description of various embodiments of the invention have been presented for purposes of illustration and description. It is not intended to limit the invention to the precise forms disclosed. Many modifications and equivalent arrangements will be apparent.

What is claimed is:

1. A method for operating a portable computing device, the method comprising:

coupling a signal line accessible through an outlet of the portable computing device to a communication device;

detecting a signal on the signal line to determine whether the communication device is actively connected to a portable computing device; and

suspending execution of a programmed event that was to occur at a subsequent moment in time in order to reduce power consumption of the portable computing device.

2. The method of claim **1**, wherein the programmed event corresponds to execution of a time-out feature, and wherein the step of suspending execution of a programmed event includes suspending a future occurrence of the timeout feature, wherein the time-out feature significantly reduces power consumption of the portable computing device.

3. The method of claim **2**, including sending communications from the portable computing device using the communication device when the communication device is actively connected to the portable computing device.

4. The method of claim **2**, wherein suspending a future occurrence of the timeout feature includes disabling the time-out feature while the communication device is actively coupled to the portable computing device.

5. The method of claim **2**, further comprising the step of launching a program that is downloaded to the portable computing device through the communication device once the occurrence of the time-out feature is suspended.

6. The method of claim **2**, further comprising the step of launching a program once the occurrence of the time-out feature is suspended, the program providing a display images selected from a group of display images consisting of a world clock, a digital image stored from a digital camera device, and a display of real-time information provided by a data network.

7. The method of claim **1**, wherein coupling a signal line includes extending the signal line to a pin element of a pin connector forming the outlet.

8. The method of claim **2**, wherein suspending a future occurrence of the timeout feature includes selectively suspending the occurrence of the time-out feature when the communication device is actively coupled to the portable computing device.

9. The method of claim **1**, wherein detecting the signal includes measuring a voltage level of the signal in order to identify the communication device as being of a particular set of one or more communication devices.

10. The method of claim **1**, wherein detecting a signal from the communication device includes coupling the portable computing device to the communication device using a pin connector, and wherein one pin in the pin connector extends to the signal line.

11. The method of claim **1**, wherein suspending execution of at least a portion of a program for reducing power consumption of the portable computing device includes determining that a programmable backlight of a display is selected to be operational, and then suspending a time-out feature for switching off the programmable backlight while the communication device is actively coupled to the portable computing device.

12. A detachable assembly, comprising:

a communication device; and

a portable computing device adapted that is detachably coupleable to the communication device, the portable computing device including:

a signal line that is adapted to couple to an output node of the communication device; and

a processor coupled to the signal line, wherein the processor is configured to determine when the communication device is actively connected to the portable computing device;

wherein the processor is programmed to suspend execution of a programmed event that would have otherwise occurred at a susbequent moment in time in order to reduce power consumption of the portable computing device.

13. The detachable assembly of claim **12**, wherein the communication device includes an alternating current adapter for supplying power to the portable computing device.

14. The detachable assembly of claim **12**, wherein the programmed event corresponds to a time-out feature that switches the portable computing device into a low-power mode, and wherein the processor is configured to suspend a future occurrence of the timeout feature in response to determining that the communication device is coupled to the portable computing device.

15. The detachable assembly of claim 14, wherein the signal line extends to a pin element of a pin connector forming the outlet.

16. The detachable assembly of claim 14, wherein the processor is configured to selectively suspend the future occurrence of the time-out feature.

17. The detachable assembly of claim 14, wherein the portable computing device downloads a program using the communication device once the occurrence of the time-out feature is suspended.

18. The detachable assembly of claim 17, wherein the processor executes the program once the occurrence of the time-out feature is suspended, wherein the program provides a display content selected from a group of displays consisting of a clock, a digital image, and a display of real-time information provided by a data network.

19. The detachable assembly of claim 12, wherein the signal line is carries a voltage level provided by the output node of the communication device when the communication device is coupled to the processor, and wherein the processor detects the voltage level in order to determine that the communication device is actively coupled to the portable computing device.

20. The detachable assembly of claim 12, wherein the portable computing device couples to the communication device using a pin connector, and wherein one pin in the pin connector extends into the signal line.

21. The detachable assembly of claim 12, wherein the processor suspends execution of the programmed event by suspending a time-out feature for switching off a backlight of a display while the communication device is coupled to the portable computing device.

22. The portable computing device of claim 21, wherein the processor executes the program once the occurrence of the time-out feature is suspended, wherein the program provides a display content selected from a group of displays consisting of a clock, a digital image, and a display of real-time information provided by a data network.

23. A portable computing device, comprising:

a signal line accessible through an outlet of the portable computing device to a communication device;

a processor counted to the signal line, wherein the processor is configured to determine when the communication device is actively connected to the portable computing device; and

wherein the processor is configured to suspend execution of a programmed event that would have otherwise occurred at a subsequent moment in time.

24. The portable computing device of claim 23, wherein the programmed event corresponds to a time-out feature that switches the portable computing device into a low-power mode, and wherein the processor is configured to suspend a future occurrence of the timeout feature in response to determining that the communication device is coupled to the portable computing device.

25. The portable computing device of claim 24, wherein the portable computing device downloads a program using the communication device once the occurrence of the time-out feature is suspended.

26. The portable computing device of claim 23, wherein the signal line extends to a pin element of a pin connector forming the outlet.

27. The portable computing device of claim 24, wherein the processor is configured to selectively suspend the future occurrence of the time-out feature.

28. The portable computing device of claim 23, wherein the signal line carries a voltage level provided by the output node of the communication device when the communication device is coupled to the processor, and wherein the processor detects the voltage level in order to determine that the communication device is actively coupled to the portable computing device.

29. The portable computing device of claim 23, wherein the portable computing device couples to the communication device using a pin connector, and wherein one pin in the pin connector extends into the signal line.

30. The portable computing device of claim 23, wherein the processor suspends execution of the programmed event by suspending a time-out feature for switching off a backlight of a display while the communication device is coupled to the portable computing device.

* * * * *

EXHIBIT B



(12) **United States Patent**
Skinner et al.

(10) **Patent No.: US 7,096,049 B2**
(45) **Date of Patent: Aug. 22, 2006**

(54) **WIRELESS TRANSACTION ENABLED HANDHELD COMPUTER SYSTEM AND METHOD**

(75) Inventors: **Craig S. Skinner**, Snohomish, WA (US); **David Mai**, Shoreline, WA (US); **Edward Joseph Vertatschitsch**, Bellevue, WA (US)

(73) Assignee: **Palm, Inc.**, Santa Clara, CA (US)

(*) Notice: Subject to any disclaimer, the term of this patent is extended or adjusted under 35 U.S.C. 154(b) by 483 days.

(21) Appl. No.: **09/865,657**

(22) Filed: **May 25, 2001**

(65) **Prior Publication Data**

US 2002/0177473 A1 Nov. 28, 2002

(51) **Int. Cl.**
H04Q 7/32 (2006.01)

(52) **U.S. Cl.** **455/573**; 455/572; 455/550.1; 455/556.1; 455/557; 455/556.2; 455/343.1; 320/114; 320/115; 320/113; 320/108

(58) **Field of Classification Search** 455/556.1, 455/556.2, 557, 550.1, 575.1, 572, 573, 569.1, 455/569.2, 403, 412.1, 412.2, 414.1, 422.1, 455/343, 552.1, 344, 347, 349, 351, 517, 455/343.1, 500; 320/125, 160, 107, 108, 320/113, 114, 115; 709/250, 218, 217, 201, 709/219, 227, 252
See application file for complete search history.

(56) **References Cited**

U.S. PATENT DOCUMENTS

4,684,870 A * 8/1987 George et al. 320/140
5,444,867 A * 8/1995 Marui et al. 455/573
5,771,471 A * 6/1998 Alberth, Jr. et al. 455/573
5,949,216 A * 9/1999 Miller 320/125
6,256,518 B1 * 7/2001 Buhrmann 455/572
6,323,775 B1 * 11/2001 Hansson 340/636.1
2002/0078248 A1 * 6/2002 Janik et al. 709/252
2002/0133565 A1 * 9/2002 Huat 709/218
2002/0163778 A1 * 11/2002 Hazzard et al. 361/683
2002/0193152 A1 * 12/2002 Soini et al. 455/569

OTHER PUBLICATIONS

Installation and Getting Started Guide, Blackberry Enterprise Edition (Last revised Jan. 26, 2001), ©Research In Motion Limited, 295 Phillip Street, Waterloo, Ontario, Canada N2L 3W8, pp. 21-31.

* cited by examiner

Primary Examiner—Keith Ferguson
(74) *Attorney, Agent, or Firm*—Foley & Lardner LLP

(57) **ABSTRACT**

A handheld computer system is disclosed. The handheld computer system includes a housing, a display supported by the housing, and a processor coupled to the display. The handheld computer system also includes a rechargeable battery configured to power the processor and the display. Further, the handheld computer system includes a recharging connector coupled to the rechargeable battery. Further still, the handheld computer system includes a recharger coupled to the recharging connector. Yet further still, the handheld computer system includes a radio frequency transceiver coupled to the processor and powerable by the battery when the battery has a charge above a predetermined low level, the transceiver configured to send and receive data while the battery charge is below the low level and the charger provides charge to the rechargeable battery and to the transceiver.

20 Claims, 2 Drawing Sheets

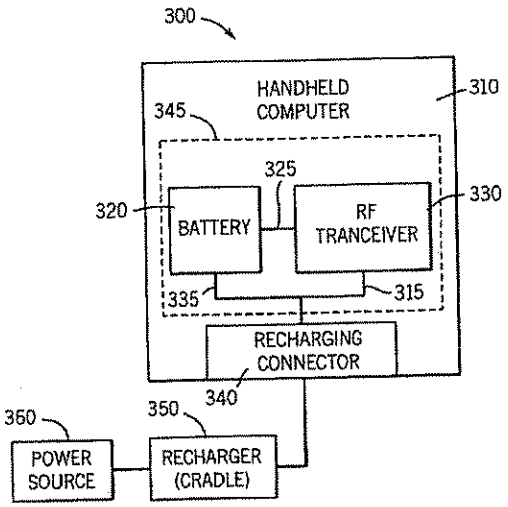

FIG. 1

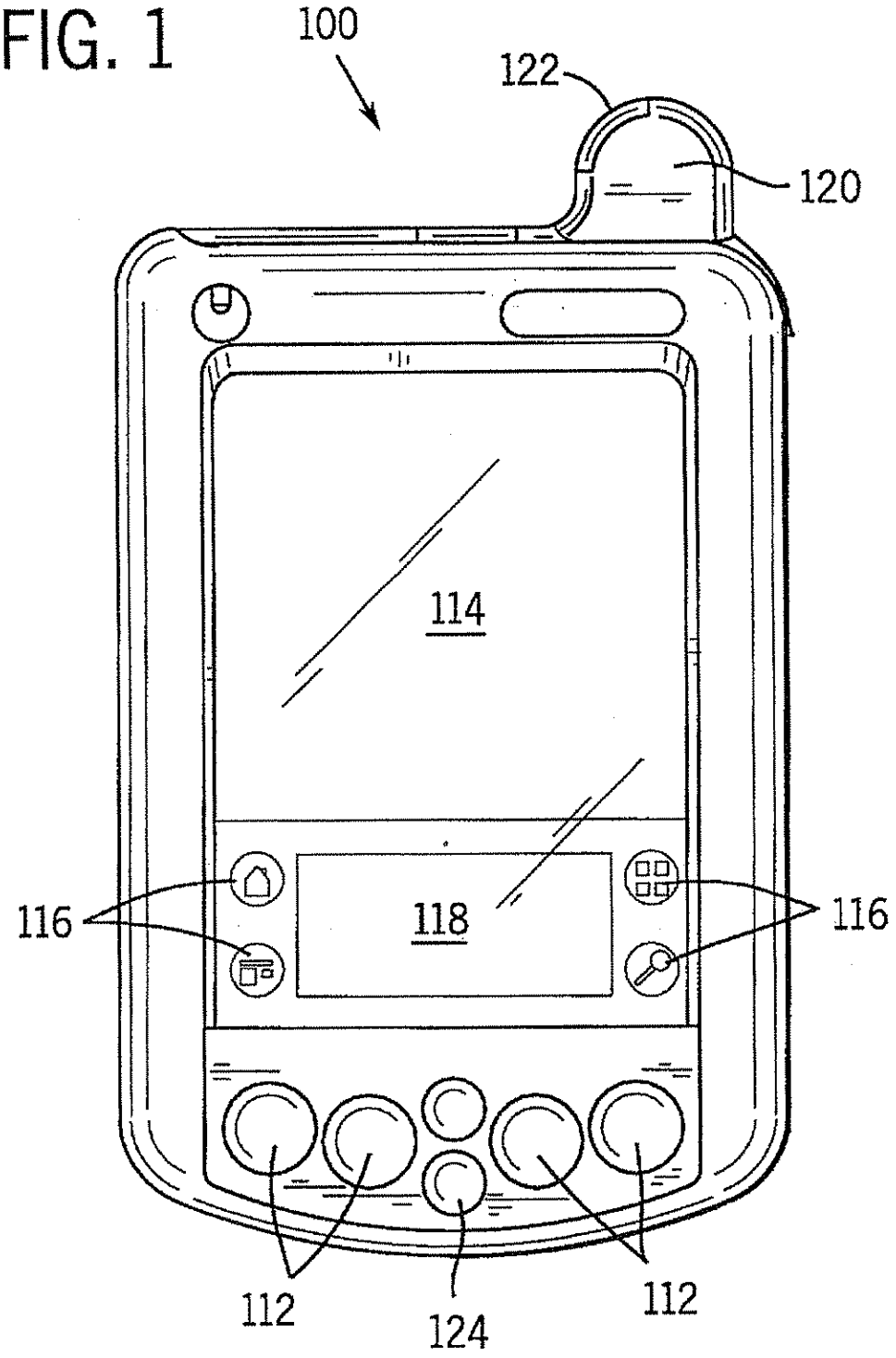

FIG. 2

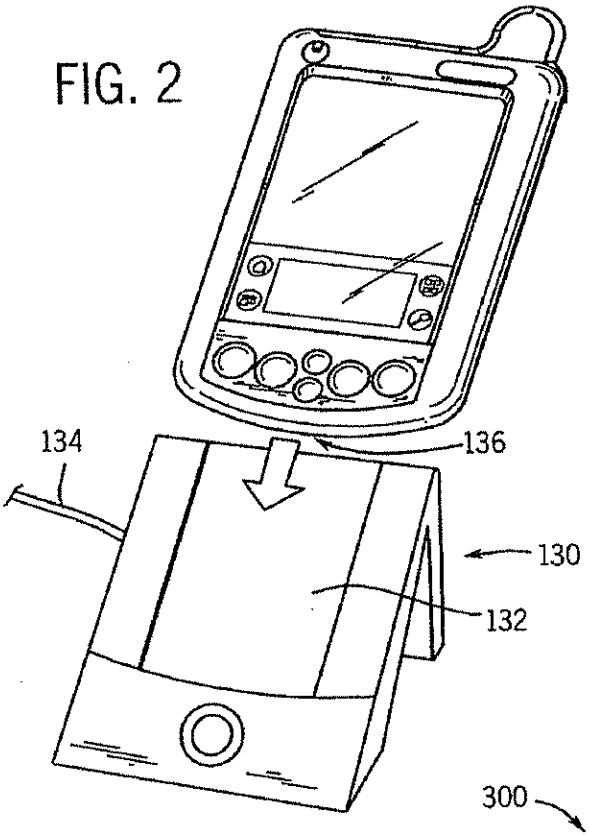
100
134
136
130
132

FIG. 3

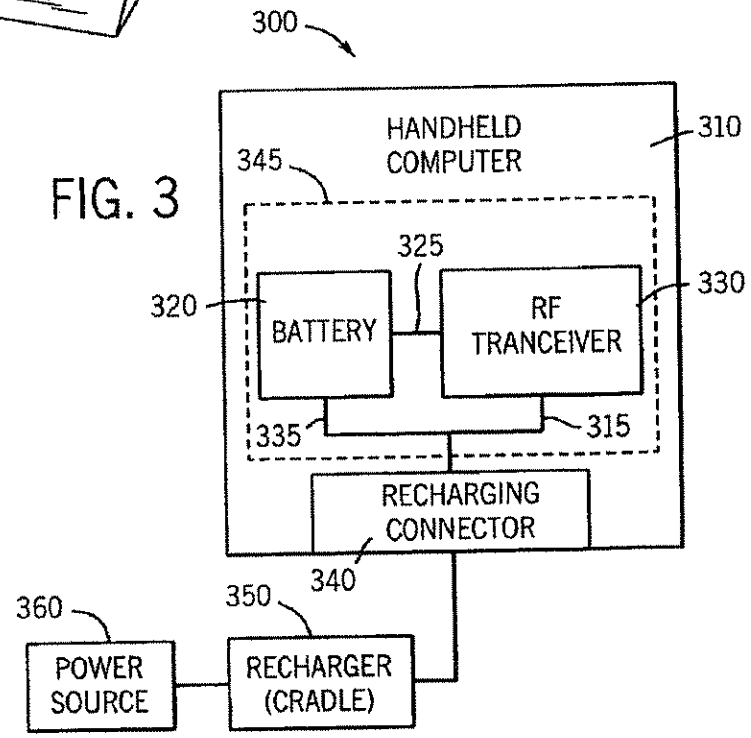
300
HANDHELD COMPUTER
310
345
325
320
BATTERY
RF TRANCEIVER
330
335
315
RECHARGING CONNECTOR
340
360
350
POWER SOURCE
RECHARGER (CRADLE)

WIRELESS TRANSACTION ENABLED HANDHELD COMPUTER SYSTEM AND METHOD

BACKGROUND

Handheld computing devices, "palmtops," "palmhelds," personal digital assistants (PDAs), or handheld computers typically weigh less than a pound and fit in a pocket. These handhelds generally provide some combination of personal information management, database functions, word processing, and spreadsheets as well as voice memo recording, wireless e-mail, and wireless telephony functions. Because of the small size and portability of handhelds, strict adherence to hardware constraints such as battery hardware constraints must be maintained. It is conventional to include a rechargeable battery in the handheld unit and further to include a recharging connector that is coupleable to a power source to enable battery recharging.

Handheld computing devices may include rechargeable batteries used to power the handheld computer and other on-board devices such as a wireless phone or wireless transceiver. The user must periodically recharge the rechargeable batteries by plugging the unit directly into a battery recharger or by placing the handheld computing device into a synchronization cradle that also functions as a battery charger.

Handheld computing devices that utilize radio frequency (RF) connections for data or voice communications require power for the RF transceiver modules that require substantial signal amplification for transmission and further require transceiver power for reception. Conventionally, handheld computing devices do not allow receiving of RF transmissions and/or the performance of RF transmissions when the battery has a charge that is below a minimum level. Accordingly, when a battery charge falls below a low minimum level communications are disabled. In such a case where the battery charge is too low for wireless communications, a user may plug the battery and/or the device into a recharger. The rechargeable battery will be charged during the time in which the handheld computer is connected to the recharger, but the wireless communications will be disabled during the charging period.

Accordingly, there is a need for a handheld computer in which wireless communications are enabled when the computer battery is below a low minimum charge level and when the handheld computer is receiving power from a power source for battery recharging, at least some of the power being used to power the RF transceiver. Further, there is a need for a handheld computer that allows RF transceiver operations when the handheld computer battery is being recharged.

The teachings herein below extend to those embodiments that fall within the scope of the appended claims, regardless of whether they accomplish one or more of the above-mentioned needs.

SUMMARY

An exemplary embodiment relates to a handheld computer system. The handheld computer system includes a housing, a display supported by the housing, and a processor coupled to the display. The handheld computer system also includes a rechargeable battery configured to power the processor and the display. Further, the handheld computer system includes a recharging connector coupled to the rechargeable battery. Further still, the handheld computer system includes a recharger coupled to the recharging connector. Yet further still, the handheld computer system includes a radio frequency transceiver coupled to the processor and powerable by the battery when the battery has a charge above a predetermined low level, the transceiver configured to send and receive data while the battery charge is below the low level and the charger provides charge to the rechargeable battery and to the transceiver.

Another exemplary embodiment relates to a method of transmitting data over a radio frequency (RF) link from a handheld computer having a low battery charge. The method includes providing the handheld computer with a rechargeable battery having a relatively low charge. The method also includes coupling the handheld computer to a recharger. Further, the method includes providing power from the charger to a transceiver of the handheld computer while the handheld computer is coupled to the recharger. Further still, the method includes establishing an RF link using the transceiver.

Yet another exemplary embodiment relates to a handheld computer. The handheld computer includes a housing, a display supported by the housing, a processor coupled to the display, and a rechargeable battery configured to power the processor and the display. The handheld computer also includes a recharging connector coupled to the rechargeable battery. Further the handheld computer includes a radio frequency (RF) transceiver coupled to the processor and powerable by the battery when the battery has a charge above a predetermined low level, the transceiver configured to send and receive data while the battery charge is below the low level and the charging connector receives power from a power source and provides power to the rechargeable battery and to the transceiver.

Yet still another exemplary embodiment relates to a handheld computer. The handheld computer includes an expansion module including a rechargeable battery and a radio frequency (RF) transceiver, the battery configured to power the transceiver when the battery has a charge above a predetermined low level. The handheld computer also includes a processor, a display, and a module connector configured to couple to the expansion module. The RF transceiver is configured to send and receive data while the battery charge is below the low level and the module receives power from a power source and provides power to the rechargeable battery and to the transceiver.

BRIEF DESCRIPTION OF THE DRAWINGS

The invention will become more fully understood from the following detailed description, taken in conjunction with the accompanying drawings, wherein like reference numerals refer to like elements, in which:

FIG. **1** is an exemplary front elevation view of a handheld computer;

FIG. **2** is a perspective view of a handheld computer and a battery charging cradle; and

FIG. **3** is a block diagram of a handheld computer and recharging system.

DETAILED DESCRIPTION OF THE PREFERRED EMBODIMENTS

Referring to FIG. **1**, a handheld computer **100** is depicted according to an exemplary embodiment. Handheld computer **100** may include Palm style computers manufactured by Palm, Inc., of Santa Clara, Calif. Other exemplary embodiments may include Windows CE handheld computers, or

other handheld computers and personal digital assistants, as well as mobile telephones, and other mobile computing devices.

Preferably, handheld computer **100** includes interactive hardware and software that performs functions such as maintaining calendars, phone lists, task lists, note pads, calculator applications, spreadsheets, games, and other applications capable of running on a computing device. Further, handheld computer **100** may be configured for such functions as voice memo recording and playback as well as communications network connectivity, internet connectivity, wireless messaging, e-mail, always-on e-mail, and wireless telephony.

Handheld computer **100**, depicted in FIG. **1** includes a plurality of input function keys **112** and a display **114** having graphical user interface features. Display **114** may be provided with a touch screen interface that allows a user to select and alter displayed content using a pointer, such as but not limited to a stylus, a pen tip, a fingertip, or other pointing devices.

Referring again to FIG. **1**, in an exemplary embodiment, display **114** also includes a Graffiti™ (or other handwriting recognition software) writing section **118** for tracing alphanumeric characters as input. A plurality of input icons **116** for performing automated or preprogrammed functions may be provided on a portion of display **114**.

In an exemplary embodiment, handheld computer **100** may include an integrated antenna **120** configured to transmit and receive wireless communication signals, such as, but not limited to, cellular telephone communication signals and other radio frequency (RF) communications signals using an RF transceiver. Antenna **120** may further include an indicator light **122** integrated into antenna **120** for indicating the transmission and reception of wireless communication signals. Further, light **122** may be used to indicate other states of handheld computer **100**.

In an exemplary embodiment, handheld computer **100** also includes navigation buttons **124** that may be utilized for navigating or scrolling of information displayed on display **114**. Further, navigation buttons **124** may be programmed for other uses depending on the application running on handheld computer **100**. Handheld computer **100** may be used for any of a variety of wireless communications, including, but not limited to, communications with the World Wide Web, mobile telephone communications, e-mail communications, etc.

Referring to FIG. **2**, in an exemplary embodiment, handheld computer **100** may be coupled to a cradle, such as a synchronization cradle **130**. Cradle **130** may include a platform **132** configured to receive handheld computer **100**, and a power or data cord **134** (which, in an exemplary embodiment may be, but is not limited to a universal serial bus (USB) cord) that may be coupled to a personal computer and a wall outlet to supply power to cradle **130** (alternatively, cradle **130** may draw power through the data cord from the personal computer).

Handheld computer **100** further includes a battery used to power the various features of handheld computer **100**. The battery may be a rechargeable lithium polymer battery, lithium ion battery, or any other type of battery applicable to a handheld device that requires periodic charging from an external power source. In an exemplary embodiment the battery may have a maximum voltage of 4.2V and provide power to an RF transceiver of handheld computer **100** when the charge is in the range of 3.6V to 4.2V, however, any applicable maximum and minimum voltages may be applied depending on the hardware and design specifications.

Handheld computer **100** may be electrically coupled to cradle **130** via any of a variety of connectors, including but not limited to a universal connector (which may be a pinned connector, in an exemplary embodiment located adjacent the bottom edge of handheld computer **100**) in an exemplary embodiment. When handheld computer **100** is electrically connected to cradle **130**, the battery may be charged. In a further exemplary embodiment, the battery may be charged when handheld computer **100** is coupled to an AC power cord that functions as a battery charger.

Referring now to FIG. **3**, an exemplary block diagram **300** of a handheld computer **310** and charging system is depicted. Handheld computer **310** includes a battery **320**, an RF transceiver **330**, and a recharging connector **340**. Recharging connector **340** is selectively coupled to a recharger **350** (or multipurpose cradle such as but not limited to a synchronization and recharging cradle). Recharger **350** receives power, and optionally data, from a power source **360**, which may be but is not limited to a personal computer or an electrical outlet.

When the user desires to charge the battery of handheld computer **310**, handheld computer **310** may be connected to recharger **350**, which will permit the charging of the battery. Conventionally, when handheld computer **310** has a low battery status, or when the battery charge has dropped below a low minimum level, RF transceiver **330** is unable to or is not permitted to function. Accordingly, any data intended for handheld computer **310** is not received by RF transceiver **330** and any requests for transmission of data by the user of handheld computer **310** are denied.

In a conventional application a user would couple handheld computer **310** to recharger **350** and begin the charging process, all the while the RF transceiver remained disabled.

In an exemplary embodiment, handheld computer **310** includes a connection, such as but not limited to connection **315** that is configured to provide power to RF transceiver **330** while battery **320** is charging. Accordingly, because of a power connection, such as connection **315**, a user of handheld computer **310** is able to transmit information while battery **320** is charging. Further, handheld computer **310** and transceiver **330** are configured to receive data while battery **320** is charging because charger **315** includes connection **315** which supplies power to RF transceiver **330**. In an alternative embodiment, a power supply connection **325** may be provided from battery **320**, in which case power delivered to battery **320** over connection **335** may be provided to RF transceiver **330** via battery **320**, while battery **320** is charging. Accordingly, a user may utilize RF transceiver **330** while charging battery **320**, even if battery **320** has a charge below a low minimum level. Further, as may be desired, for example, in a device configured for an "always-on" e-mail application, RF transceiver **330** will continue to receive e-mail or be enabled to provide other types of RF communications while battery **320** is being charged.

In another exemplary embodiment the battery, such as battery **320** may be a rechargeable battery for an optional expansion module **345** utilizing an RF transceiver. Such an expansion module may be, but is not limited to a cell phone expansion module, a wireless networking module, and the like. Accordingly, the RF transceiver of expansion module **345** having a rechargeable battery may be enabled when drawing power from a charger, even when the battery of expansion module **345** has a charge below a minimum level.

While the detailed drawings, specific examples and particular formulations given describe exemplary embodiments, they serve the purpose of illustration only. The hardware and software configurations shown and described

may differ depending on the chosen performance characteristics and physical characteristics of the computing devices. The systems shown and described are not limited to the precise details and conditions disclosed. Furthermore, other substitutions, modifications, changes, and omissions may be made in the design, operating conditions, and arrangement of the exemplary embodiments without departing from the scope of the invention as expressed in the appended claims.

What is claimed is:

1. A handheld computer system, comprising:

a housing;

a display supported by the housing;

a processor coupled to the display;

a rechargeable battery configured to power the processor and the display;

a recharging connector coupled to the rechargeable battery;

a recharger coupled to the recharging connector; and

a radio frequency transceiver coupled to the processor and powerable by the battery when the battery has a charge above a low level, the transceiver configured to send and receive data while the battery charge is below the low level and the recharger provides charge to the rechargeable battery and to the transceiver, the low level being a level at which the battery is unable to power the transceiver when the charge is below the low level.

2. The handheld computer system of claim 1, wherein the recharger is a recharging cradle.

3. The handheld computer system of claim 1, wherein the recharger includes a recharger connector configured to couple to the recharging connector.

4. The handheld computer system of claim 1, wherein the recharger is also a synchronization cradle.

5. The handheld computer of claim 4, wherein the synchronization cradle includes an electrical connector that is configured to couple to the recharging connector.

6. The handheld computer system of claim 5, wherein the electrical connector is configured to couple to a data connector on the handheld computer.

7. A method of transmitting data over a radio frequency (RF) link from a handheld computer having a low battery charge, comprising:

providing the handheld computer wit a rechargeable battery having a relatively low charge, the relatively low charges being too low to transmit information using a transceiver of the handheld computer;

coupling the handheld computer to a recharger;

providing power from the recharger to the transceiver of the handheld computer and the battery while the handheld computer is coupled to the recharger;

establishing an RF link using the transceiver while the battery has a relatively low charge and the handheld computer is coupled to the recharger.

8. The method of claim 7, further comprising:

providing power from the rechargeable battery to the transceiver.

9. The method of claim 7, further comprising:

coupling the handheld computer to a synchronization cradle, the synchronization cradle having a charger connector.

10. The method of claim 7, further comprising:

providing data across the RF link.

11. The method of claim 7, further comprising:

draining the rechargeable battery to a charge level at which the transceiver is unable to establish an RF link.

12. The method of claim 7, further comprising:

receiving an e-mail message.

13. The method of claim 7, further comprising:

receiving a cellular telephone call.

14. A handheld computer, comprising:

a housing;

a display supported byte housing;

a processor coupled to the display;

a rechargeable battery configured to power the processor and the display;

a recharging connector coupled to the rechargeable battery; and

a radio frequency (RF) transceiver coupled to the processor and powerable by the battery when the battery has a charge above a low level, the transceiver configured to send and receive data while the bakery charge is below the low level and the recharging connector receives power from a power source and provides power to the rechargeable battery and to the transceiver, the low level being a level at which the battery is unable to power the transceiver when the charge is below the low level.

15. The handheld computer of claim 14, further comprising:

a computer program running on the processor, the computer program configured to request access to the RF transceiver.

16. The handheld computer of claim 15, wherein the computer program is an e-mail program.

17. The handheld computer of claim 15, wherein the computer program is an always-on e-mail program.

18. The handheld computer of claim 14, further comprising:

an expansion connector coupled to the processor, the expansion connector configured to couple to input/output devices.

19. The handheld computer of claim 18, wherein the RF transceiver is coupled to the expansion connector.

20. A handheld computer, comprising:

an expansion module including a rechargeable battery and a radio frequency (RF) transceiver, the battery configured to power the transceiver when the battery has a charge above a low level;

a processor

a display; and

a module connector configured to couple to the expansion module,

wherein the RF transceiver is configured to send and receive data while the battery charge is below the low level and the module receives power from a power source and provides power to the rechargeable battery and to the transceiver, the low level being a level at which the battery is unable to power the transceiver when the charge is below the low level.

* * * * *