IN THE UNITED STATES DISTRICT COURT
FOR THE DISTRICT OF DELAWARE

SAMSUNG TELECOMMUNICATIONS AMERICA LLP and SAMSUNG ELECTRONICS CO., LTD., Plaintiffs, v. INTERDIGITAL COMMUNICATIONS CORPORATION, INTERDIGITAL TECHNOLOGY CORPORATION, and TANTIVY COMMUNICATIONS, INC., Defendants.	Civil Action No. _____

COMPLAINT AND DEMAND FOR JURY TRIAL

Plaintiffs Samsung Telecommunications America LLP ("Samsung Telecom") and Samsung Electronics Co., Ltd. ("Samsung Electronics") (collectively, "Samsung"), through their undersigned attorneys, allege the following as and for their complaint against Defendants InterDigital Communications Corporation, InterDigital Technology Corporation, and Tantivy Communications, Inc. (collectively, "InterDigital").

Nature and Basis of Action

1. This is an action arising under the Declaratory Judgment Act, 28 U.S.C. §§ 2201 and 2202, the United States Patent Laws, 35 U.S.C. § 1 *et seq.*, and the laws of several states, including Delaware and California. Samsung Electronics seeks damages and injunctive relief for InterDigital's refusal to comply with its contractual obligations to be prepared to license its patents on fair, reasonable, and nondiscriminatory ("FRAND") terms. Samsung Telecom and Samsung Electronics further request declarations that (i) that InterDigital's refusal to provide FRAND licenses, despite its contractual obligations to do so, constitutes an unfair business practice; (ii) that Samsung Telecom and Samsung Electronics have a right to InterDigital's patents by virtue of their relationship with Qualcomm; (iii) that the claims of various patents

allegedly owned by InterDigital are unenforceable; (iv) that the claims of various patents allegedly owned by InterDigital are invalid; and/or (v) that the claims of various patents allegedly owned by InterDigital are not infringed by Samsung Telecom or Samsung Electronics.

Parties

2. Plaintiff Samsung Telecommunications America LLP ("Samsung Telecom") is organized and existing under the laws of the State of Delaware, having its principal place of business at 1301 East Lookout Drive, Richardson, Texas 75082, USA. Plaintiff Samsung Telecom researches, develops and markets a variety of personal and business communications products throughout North America, including handheld wireless phones, wireless communications infrastructure systems, fiber optics and enterprise communication systems, all under the brand name SAMSUNG.

3. Plaintiff Samsung Electronics Co., Ltd. ("Samsung Electronics") is a Korean corporation with its principle place of business at 250, 2-Ka, Taepying-Ro, Chung-Ku, Seoul, Korea. Plaintiff Samsung Electronics researches, develops, and markets various electronic consumer devices, including DVD players, big-screen televisions, and digital cameras; computers, color monitors, LCD panels, and printers; semiconductors such as DRAMs, SRAMs, and flash memory; and communications devices ranging from wireless phones to networking switches, all under the brand name SAMSUNG.

4. Defendant InterDigital Communications Corporation ("IDC") is a corporation organized and existing under the laws of the State of Pennsylvania, with offices at 781 Third Avenue, King of Prussia, Pennsylvania, 19406, USA. Upon information and belief, Defendant IDC develops circuitry designs, software, and other technology using wireless

telecommunications standards. InterDigital also develops semiconductors and software to enable voice and data transmissions in mobile phones and portable computing devices.

5. Defendant InterDigital Technology Corporation ("ITC") is a corporation organized and existing under the laws of the State of Delaware, with offices at 300 Delaware Avenue, Suite 527, Wilmington, Delaware, 19801, USA. Upon information and belief, Defendant ITC is a wholly owned subsidiary of IDC and licenses the technology developed by Defendant IDC.

6. Defendant Tantivy Communications, Inc. ("Tantivy") is a corporation organized and existing under the laws of the State of Delaware, with offices at 300 Delaware Avenue, Suite 527, Wilmington, Delaware, 19801, USA. Upon information and belief, Defendant Tantivy is a wholly owned subsidiary of IDC.

Jurisdiction and Venue

7. Plaintiff Samsung Telecom is a party solely to the declaratory judgment claims asserted under the patent statute and is not a party to the state-law claims asserted solely by Samsung Electronics.

8. This Court has jurisdiction over the subject matter of this action under 28 U.S.C. §§ 1331 and 1338, and the Declaratory Judgment Act, 28 U.S.C. §§ 2201 and 2202 based on federal question jurisdiction.

9. This Court has supplemental jurisdiction over the state-law claims asserted in this action under 28 U.S.C. § 1367. The federal and state law claims asserted in this action arise from a common nucleus of operative facts. Alternatively, this Court has subject matter jurisdiction over the state-law claims asserted in this action under 28 U.S.C. § 1332 because

there is complete diversity between the parties to the state-law claims and because the amount in controversy exceeds the value of $75,000, exclusive of interests and costs.

10. This Court has personal jurisdiction over InterDigital under the laws of the State of Delaware, including the Delaware long-arm statute, 10 Del. Code § 3104.

11. Venue is proper in this District under 28 U.S.C. § 1391.

Facts Giving Rise to this Action

12. This case is about InterDigital's anticompetitive and illegal conduct in the cellular telephone industry and particularly in its dealings with Samsung. Over a number of years and on a number of occasions, InterDigital has successfully induced standards development organizations ("SDOs") to incorporate InterDigital's patented technology into third-generation ("3G") cellular telecommunications standards by committing to provide licenses to its 3G intellectual property on fair, reasonable, and nondiscriminatory terms. But now, with the standards in place, InterDigital refuses to provide Samsung with a license on FRAND terms.

13. InterDigital's refusal to negotiate reasonable terms with Samsung is nothing new. In 1995, Samsung and InterDigital entered into a license agreement that covered second-generation ("2G") technology. The parties are presently arbitrating the effect of the variable royalty terms provided under Samsung's most-favored-licensee clause in that agreement and, in particular, InterDigital's refusal to grant Samsung its contractual right to pay royalties on "equal footing" with Nokia, another InterDigital licensee. But the claims at issue in this case are wholly unrelated to that arbitration. Here, Samsung's claims relate exclusively to 3G technology, which is not presently covered by any existing Samsung–InterDigital license.

The Cellular Telecommunications Industry

14. The wireless telecommunications industry is heavily regulated by technical standards developed and maintained by SDOs. The first generation ("1G") of technology used analog signals. The move to digital, and the second generation ("2G"), came in the 1990s, with two dominant technical standards capturing the market: Global System for Mobility ("GSM") and Code Division Multiple Access ("CDMA"). Today, most wireless service providers operate on either the GSM platform or the CDMA platform, and the two are incompatible. For instance, Cingular Wireless and T-Mobile operate on the GSM network, while Verizon Wireless and Sprint/Nextel use CDMA.

15. The next generation of wireless technology (i.e., 3G) has long been anticipated for its promised capabilities to deliver multimedia and internet connectivity to cellular handsets. And 3G has been promised as a convergent standard that will join historically disparate 2G networks in the future along upgrade paths directed to a single global telecommunications standard. But for a decade, the widespread adoption of 3G and investment in 3G infrastructure by service providers like Cingular and Verizon has been hampered by complex issues relating to ownership of the intellectual property rights that cover 3G technology. The stakes are high, and recently the situation has boiled over. Cellular handset and chipset manufacturers faced with InterDigital's unreasonable royalty demands and license terms for its 3G intellectual property rights have sought relief through the courts.

The Role of Standards Development Organizations in the Cellular Industry

16. At the core of this case is the role that SDOs play in the evolution of wireless technology and the rules by which SDOs must operate and regulate industry participants like InterDigital and Samsung. SDOs evaluate technology and are supposed to generate (usually by a

vote of the SDO membership) a public standard representing the best technological solution that can be used to promote compatibility and enhance competition.

17. Without certain rules, however, SDOs would be illegal trusts because SDOs are a forum in which competitors essentially negotiate to determine which products they will and will not make. The payoff for owners of patents that are incorporated into the standard is substantial because the entire industry will need a license to the patents essential to the standard in order to make products designed to operate according to the standard. To prevent patent owners from imposing monopolistic royalties and to mitigate the threat of a single patent owner holding up the industry, SDOs condition the standardization of proprietary technology upon the patent owner's promise to make the technology available to the public royalty-free or on fair, reasonable, and nondiscriminatory terms. Securing a promise from an intellectual property owner that it will provide FRAND license terms permits the SDOs to set industry standards despite antitrust laws because industry standards as a whole can have procompetitive benefits, lowering barriers to market entry and making more products available at lower prices.

18. Unfortunately, for the same reason—avoiding antitrust scrutiny—SDOs refrain from setting any commercial license terms or attempting to articulate what terms would satisfy the FRAND standard, leaving the door open for monopolistic opportunists, like InterDigital, to either extract unreasonable terms and conditions or claim that FRAND is too vague to enforce, which is precisely what InterDigital did in the Telecommunications Industry Association.

InterDigital's Commitments to Standards Development Organizations

19. InterDigital champions its participation in SDOs. For instance, InterDigital notes that "[t]hrough active participation in both the principal wireless 3G standards and IEEE 802 working groups of the worldwide standards bodies, InterDigital is engaged in helping the

industry define the next generation of wireless technologies." Contributing to Industry Standards, INTERDIGITAL.COM, *at* http://www.interdigital.com/tech_products_contributing.shtml (last visited Feb. 16, 2007).

20. InterDigital has announced to the world that it participates in several SDOs, including:

(a) the European Telecommunications Standards Institute ("ETSI");

(b) the Alliance for Telecommunications Industry Solutions ("ATIS");

(c) the Telecommunications Industry Association ("TIA");

(d) the Association of Radio Industries and Business ("ARIB"); and

(e) the International Telecommunications Union Radio Sector ("ITU")

(hereinafter, collectively, "the wireless telecom SDOs").

21. Each of the wireless telecom SDOs has a policy for handling intellectual property rights ("IPR"). Generally, each IPR policy requires every member of the SDO to inform the SDO of any IPR that the member contends is essential or potentially essential to practice a proposed standard. Prior to incorporating a member's technology into a standard, each SDO requests that the member provide an undertaking or declaration stating that it is prepared to grant irrevocable licenses under its patented technology on fair, reasonable, and nondiscriminatory terms and conditions. Put another way, in exchange for having its technology included in the standard, for having the SDO promote the standards worldwide, and for having the industry directed to use its patented technology, each member trades away the right to refuse to license its intellectual property to anyone willing to pay FRAND terms. In short, the promise of FRAND licenses is the *quid pro quo* of the bargain struck between the SDO and the intellectual property owner.

22. On information and belief, InterDigital has struck a bargain with each of the wireless telecom SDOs, committing irrevocably to provide its 3G intellectual property allegedly essential to practice 3G standards on FRAND terms to all interested licensees.

InterDigital's Refusal to Provide Samsung FRAND License Terms

23. Over the course of several months, Samsung and InterDigital have been engaged in comprehensive negotiations regarding Samsung's desire for a license on FRAND terms to InterDigital's 3G technology. InterDigital's 3G technology allegedly covers a variety of United States Patents, including, but not necessarily limited to, the following:

- U.S. Patent No. 5,093,840, entitled "Adaptive Power Control for a Spread Spectrum Transmitter," attached hereto as Exhibit A.
- U.S. Patent No. 5,799,010, entitled "Code Division Multiple Access (CDMA) Communication System," attached hereto as Exhibit B.
- U.S. Patent No. 6,075,792, entitled "CDMA Communication System Which Selectively Allocates Bandwidth Upon Demand," attached hereto as Exhibit C.
- U.S. Patent No. 6,151,332, entitled "Protocol, Conversion and Bandwidth Reduction Technique Providing Multiple NB+D ISDN Basic Rate Interface Links Over a Wireless Code Division Multiple Access Communication System," attached hereto as Exhibit D.
- U.S. Patent No. 6,181,949, entitled "Method of Controlling Initial Power Ramp-Up in CDMA Systems by Using Short Codes," attached hereto as Exhibit E.
- U.S. Patent No. 6,215,778, entitled "Bearer Channel Modification System for a Code Division Multiple Access (CDMA) Communication System," attached hereto as Exhibit F.
- U.S. Patent No. 6,289,004, entitled "Adaptive Cancellation of Fixed Interferers," attached hereto as Exhibit G.
- U.S. Patent No. 6,545,990, entitled "Method and Apparatus for a Spectrally Compliant Cellular Communication System," attached hereto as Exhibit H.
- U.S. Patent No. 6,614,776, entitled "Forward Error Correction Scheme for High Rate Data Exchange in a Wireless System," attached hereto as

Exhibit I.

(hereinafter, collectively, "the patents-in-suit").

24. Throughout the negotiations, Samsung has repeatedly sought from InterDigital a license on FRAND terms based on InterDigital's express promises to the wireless telecom SDOs that InterDigital would provide its intellectual property, including the patents-in-suit, allegedly essential for the practice of 3G wireless telecommunication standards on FRAND terms.

25. Throughout the negotiations, InterDigital has maintained that Samsung would infringe InterDigital's 3G intellectual property, including the patents-in-suit, if Samsung manufactured a product that complied with the 3G wireless standards.

26. Throughout the negotiations, InterDigital explicitly or implicitly threatened Samsung with patent infringement litigation if Samsung did not accept InterDigital's terms for a license—terms which were substantially out of line with InterDigital's FRAND obligations.

27. InterDigital refused to negotiate any further, maintaining its insistence upon terms substantially in excess of FRAND terms, and thereby failing to comply with its obligations to Samsung based on InterDigital's bargain with the wireless telecom SDOs.

28. In light of the litigation currently pending between InterDigital and Samsung regarding 2G technology, the explicit or implicit threats of litigation by InterDigital during licensing negotiations, and the fact that InterDigital has now terminated any further negotiations over FRAND licensing, Samsung has a reasonable apprehension of imminently being sued for infringement of InterDigital's 3G patents, including the patents-in-suit.

COUNT I.
Breach of Contract (the ETSI IPR Policy)

29. Samsung Electronics incorporates and re-alleges all of the averments contained in paragraphs 1 through 28 as if set forth fully herein.

30. As set forth above, the European Telecommunications Standards Institute ("ETSI") is an SDO responsible for, among other things, the development of 3G wireless telecommunications standards.

31. Both Samsung Electronics and InterDigital are members of ETSI. As members of ETSI, Samsung Electronics and InterDigital entered into an actual or implied contract to comply with ETSI's governing documents, including, but not limited to, ETSI's Intellectual Property Rights Policy.

32. Under the terms of the ETSI IPR Policy, prior to the approval of a proposed standard, ETSI requests that members commit that they are "prepared to grant irrevocable licenses on fair, reasonable, and nondiscriminatory terms and conditions."

33. On information and belief, InterDigital has declared to ETSI that InterDigital owns IPR allegedly essential to practicing 3G standards. With InterDigital's declarations to ETSI, InterDigital made a binding and irrevocable promise that, as a condition to ETSI adopting standards that allegedly require InterDigital's IPR to implement, InterDigital would negotiate licenses in good faith and would be prepared to grant FRAND terms to all potential licensees.

34. InterDigital breached its contractual obligations to Samsung Electronics when InterDigital refused to negotiate licenses in good faith and when it failed to provide FRAND terms.

35. As a result of InterDigital's breaches, Samsung Electronics has been injured in its business or property through the loss of past, present, and future profits, by the loss of customers

and potential customers, by the loss of goodwill and product image, and by the prospective damage to its handset business.

36. As a result of Samsung Electronics' injuries, Samsung Electronics seeks damages in an amount to be proven at trial.

37. As a result of Samsung Electronics' injuries, Samsung Electronics further seeks specific performance of InterDigital's contractual obligations to negotiate licenses in good faith and to provide FRAND terms.

COUNT II.
Breach of Contract (the ETSI IPR Policy),
with Samsung as an Intended, Third-Party Beneficiary

38. Samsung Electronics incorporates and re-alleges all of the averments contained in paragraphs 1 through 37 as if set forth fully herein.

39. Alternatively, InterDigital, as a member of ETSI, entered into an actual or implied contract with ETSI to comply with ETSI's governing documents, including, but not limited to, ETSI's IPR Policy.

40. InterDigital's contract with ETSI created contractual rights in third parties, including Samsung as a potential licensee of InterDigital's intellectual property allegedly essential for practicing 3G standards. InterDigital was on notice when it joined ETSI, when it agreed to comply with the ETSI IPR Policy, and when it submitted "IPR Licensing Declarations" to ETSI identifying intellectual property allegedly essential to the 3G standards. As a result, Samsung Electronics is an intended, third-party beneficiary of InterDigital's contract with ETSI, and Samsung Electronics can enforce InterDigital's promise to be prepared to grant FRAND licenses.

41. Under the terms of the ETSI IPR Policy, prior to the approval of a proposed standard, ETSI requests that members commit that they are "prepared to grant irrevocable licenses on fair, reasonable, and nondiscriminatory terms and conditions."

42. On information and belief, InterDigital has declared to ETSI that InterDigital owns IPR allegedly essential to practicing 3G standards. With InterDigital's declarations to ETSI, InterDigital made a binding and irrevocable promise that, as a condition to ETSI adopting standards that allegedly require InterDigital's IPR to implement, InterDigital would negotiate licenses in good faith and would be prepared to grant FRAND terms to all potential licensees.

43. InterDigital breached its contractual obligations to Samsung Electronics when InterDigital refused to negotiate licenses in good faith and when it failed to provide FRAND terms.

44. As a result of InterDigital's breaches, Samsung Electronics has been injured in its business or property through the loss of past, present, and future profits, by the loss of customers and potential customers, by the loss of goodwill and product image, and by the prospective damage to its handset business.

45. As a result of Samsung Electronics' injuries, Samsung Electronics seeks damages in an amount to be proven at trial.

46. As a result of Samsung Electronics' injuries, Samsung Electronics further seeks specific performance of InterDigital's contractual obligations to negotiate licenses in good faith and to provide FRAND terms.

COUNT III.
Breach of Contract (the ATIS IPR Policy)

47. Samsung Electronics incorporates and re-alleges all of the averments contained in paragraphs 1 through 46 as if set forth fully herein.

48. As set forth above, the Alliance for Telecommunications Industry Solutions ("ATIS") is an SDO responsible for, among other things, the development of 3G wireless telecommunications standards.

49. Both Samsung Electronics and InterDigital are members of ATIS. As members of ATIS, Samsung Electronics and InterDigital entered into an actual or implied contract to comply with ATIS's governing documents, including, but not limited to, ATIS's Intellectual Property Rights Policy.

50. Under the terms of the ATIS IPR Policy, prior to the approval of a proposed standard, ATIS requests assurance from IPR holders that they are prepared to make available licenses to applicants "under reasonable terms and conditions that are demonstrably free of any unfair discrimination."

51. On information and belief, InterDigital has made assurances to ATIS that InterDigital owned IPR allegedly essential to practicing 3G standards. With InterDigital's assurances to ATIS, InterDigital made a binding and irrevocable promise that, as a condition to ATIS adopting standards that allegedly required InterDigital's IPR to implement, InterDigital would negotiate licenses in good faith and would be prepared to grant FRAND terms to all potential licensees.

52. InterDigital breached its contractual obligations to Samsung Electronics when InterDigital refused to negotiate licenses in good faith and when it failed to provide FRAND terms.

53. As a result of InterDigital's breaches, Samsung Electronics has been injured in its business or property through the loss of past, present, and future profits, by the loss of customers

and potential customers, by the loss of goodwill and product image, and by the prospective damage to its handset business.

54. As a result of Samsung Electronics' injuries, Samsung Electronics seeks damages in an amount to be proven at trial.

55. As a result of Samsung Electronics' injuries, Samsung Electronics further seeks specific performance of InterDigital's contractual obligations to negotiate licenses in good faith and to provide FRAND terms.

COUNT IV.
Breach of Contract (the ATIS IPR Policy),
with Samsung as an Intended, Third-Party Beneficiary

56. Samsung Electronics incorporates and re-alleges all of the averments contained in paragraphs 1 through 55 as if set forth fully herein.

57. Alternatively, InterDigital, as a member of ATIS, entered into an actual or implied contract with ATIS to comply with ATIS's governing documents, including, but not limited to, ATIS's IPR Policy.

58. InterDigital's contract with ATIS created contractual rights in third parties, including Samsung Electronics as a potential licensee of InterDigital's intellectual property allegedly essential for practicing 3G standards. InterDigital was on notice when it joined ATIS, when it agreed to comply with the ATIS IPR Policy, and when it made assurances to ATIS identifying IPR allegedly essential to the 3G standards. As a result, Samsung Electronics is an intended, third-party beneficiary of InterDigital's contract with ATIS, and Samsung Electronics can enforce InterDigital's promise to be prepared to grant FRAND licenses.

59. Under the terms of the ATIS IPR Policy, prior to the approval of a proposed standard, ATIS requests assurance from IPR holders that they are prepared to make available

licenses to applicants "under reasonable terms and conditions that are demonstrably free of any unfair discrimination."

60. On information and belief, InterDigital has made assurances to ATIS that InterDigital owned IPR allegedly essential to practicing 3G standards. With InterDigital's assurances to ATIS, InterDigital made a binding and irrevocable promise that, as a condition to ATIS adopting standards that allegedly required InterDigital's IPR to implement, InterDigital would negotiate licenses in good faith and would be prepared to grant FRAND terms to all potential licensees.

61. InterDigital breached its contractual obligations to Samsung Electronics when InterDigital refused to negotiate licenses in good faith and when it failed to provide FRAND terms.

62. As a result of InterDigital's breaches, Samsung Electronics has been injured in its business or property through the loss of past, present, and future profits, by the loss of customers and potential customers, by the loss of goodwill and product image, and by the prospective damage to its handset business.

63. As a result of Samsung Electronics' injuries, Samsung Electronics seeks damages in an amount to be proven at trial.

64. As a result of Samsung Electronics' injuries, Samsung Electronics further seeks specific performance of InterDigital's contractual obligations to negotiate licenses in good faith and to provide FRAND terms.

COUNT V.
Breach of Contract (the TIA IPR Policy)

65. Samsung Electronics incorporates and re-alleges all of the averments contained in paragraphs 1 through 64 as if set forth fully herein.

66. As set forth above, the Telecommunications Industry Association ("TIA") is an SDO responsible for, among other things, the development of 3G wireless telecommunications standards.

67. Both Samsung Electronics and InterDigital are members of TIA. As members of TIA, Samsung Electronics and InterDigital entered into an actual or implied contract to comply with TIA's governing documents, including, but not limited to, TIA's Intellectual Property Rights Policy.

68. Under the terms of the TIA IPR Policy, prior to the approval of a proposed standard, TIA must receive an effective "Patent Holder Statement" in the form of a document contained in "Annex H," which is included in TIA's "Engineering Manual" (i.e., TIA's bylaws). Among other things, the "Patent Holder Statement" requests that the IPR holder irrevocably commit to making available licenses "to all applicants under terms and conditions that are reasonable and non-discriminatory."

69. On information and belief, InterDigital has filed "Patent Holder Statements" with TIA declaring that InterDigital allegedly owns IPR essential to practicing 3G standards. With InterDigital's statements to TIA, InterDigital made a binding and irrevocable promise that, as a condition to TIA adopting standards that allegedly required InterDigital's IPR to implement, InterDigital would negotiate licenses in good faith and would be prepared to grant FRAND terms to all potential licensees.

70. InterDigital breached its contractual obligations to Samsung Electronics when InterDigital refused to negotiate licenses in good faith and when it failed to make available FRAND terms.

71. As a result of InterDigital's breaches, Samsung Electronics has been injured in its business or property through the loss of past, present, and future profits, by the loss of customers and potential customers, by the loss of goodwill and product image, and by the prospective damage to its handset business.

72. As a result of Samsung Electronics' injuries, Samsung Electronics seeks damages in an amount to be proven at trial.

73. As a result of Samsung Electronics' injuries, Samsung Electronics further seeks specific performance of InterDigital's contractual obligations to negotiate licenses in good faith and to provide FRAND terms.

COUNT VI.
Breach of Contract (the TIA IPR Policy),
with Samsung as an Intended, Third-Party Beneficiary

74. Samsung Electronics incorporates and re-alleges all of the averments contained in paragraphs 1 through 73 as if set forth fully herein.

75. Alternatively, InterDigital, as a member of TIA, entered into an actual or implied contract with TIA to comply with TIA's governing documents, including, but not limited to, TIA's IPR Policy.

76. InterDigital's contract with TIA created contractual rights in third parties, including Samsung Electronics as a potential licensee of InterDigital's intellectual property allegedly essential for practicing 3G standards. InterDigital was on notice when it joined TIA, when it agreed to comply with the TIA IPR Policy, and when it made assurances to TIA identifying IPR allegedly essential to the 3G standards. As a result, Samsung Electronics is an intended, third-party beneficiary of InterDigital's contract with TIA, and Samsung can enforce InterDigital's promise to be prepared to grant FRAND licenses.

77. Under the terms of the TIA IPR Policy, prior to the approval of a proposed standard, TIA must receive an effective "Patent Holder Statement" in the form of a document contained in "Annex H," which is included in TIA's "Engineering Manual" (i.e., TIA's bylaws). Among other things, the "Patent Holder Statement" requests that the IPR holder irrevocably commit to making available licenses "to all applicants under terms and conditions that are reasonable and non-discriminatory."

78. On information and belief, InterDigital has filed "Patent Holder Statements" with TIA declaring that InterDigital allegedly owns IPR essential to practicing 3G standards. With InterDigital's statements to TIA, InterDigital made a binding and irrevocable promise that, as a condition to TIA adopting standards that allegedly required InterDigital's IPR to implement, InterDigital would negotiate licenses in good faith and would be prepared to grant FRAND terms to all potential licensees.

79. InterDigital breached its contractual obligations to Samsung Electronics when InterDigital refused to negotiate licenses in good faith and when it failed to make available FRAND terms.

80. As a result of InterDigital's breaches, Samsung Electronics has been injured in its business or property through the loss of past, present, and future profits, by the loss of customers and potential customers, by the loss of goodwill and product image, and by the prospective damage to its handset business.

81. As a result of Samsung Electronics' injuries, Samsung Electronics seeks damages in an amount to be proven at trial.

82. As a result of Samsung Electronics' injuries, Samsung Electronics further seeks specific performance of InterDigital's contractual obligations to negotiate licenses in good faith and to provide FRAND terms.

COUNT VII.
Breach of Contract (the ARIB IPR Policy)

83. Samsung Electronics incorporates and re-alleges all of the averments contained in paragraphs 1 through 82 as if set forth fully herein.

84. As set forth above, the Association of Radio Industries and Businesses ("ARIB") is an SDO responsible for, among other things, the development of 3G wireless telecommunications standards.

85. Both Samsung Electronics and InterDigital are members of ARIB. As members of ARIB, Samsung Electronics and InterDigital entered into an actual or implied contract to comply with ARIB's governing documents, including, but not limited to, ARIB's Intellectual Property Rights Policy.

86. Under the terms of the ARIB IPR Policy, prior to the approval of a proposed standard, ARIB requests that members submit an effective statement that declares their willingness to "grant a non-exclusive and non-discriminatory license to the use of such Essential IPR on reasonable terms and conditions to anyone who uses such an ARIB Standard."

87. On information and belief, InterDigital has made statements to ARIB that InterDigital owned IPR allegedly essential to practicing 3G standards. With InterDigital's statements to ARIB, InterDigital made a binding and irrevocable promise that, as a condition to ARIB adopting standards that allegedly required InterDigital's IPR to implement, InterDigital would negotiate licenses in good faith and would be prepared to grant FRAND terms to all potential licensees.

88. InterDigital breached its contractual obligations to Samsung Electronics when InterDigital refused to negotiate licenses in good faith and when it failed to provide FRAND terms.

89. As a result of InterDigital's breaches, Samsung Electronics has been injured in its business or property through the loss of past, present, and future profits, by the loss of customers and potential customers, by the loss of goodwill and product image, and by the prospective damage to its handset business.

90. As a result of Samsung Electronics' injuries, Samsung Electronics seeks damages in an amount to be proven at trial.

91. As a result of Samsung Electronics' injuries, Samsung Electronics further seeks specific performance of InterDigital's contractual obligations to negotiate licenses in good faith and to provide FRAND terms.

COUNT VIII.
Breach of Contract (the ARIB IPR Policy),
with Samsung as an Intended, Third-Party Beneficiary

92. Samsung Electronics incorporates and re-alleges all of the averments contained in paragraphs 1 through 91 as if set forth fully herein.

93. Alternatively, InterDigital, as a member of ARIB, entered into an actual or implied contract with ARIB to comply with ARIB's governing documents, including, but not limited to, ARIB's IPR Policy.

94. InterDigital's contract with ARIB created contractual rights in third parties, including Samsung Electronics as a potential licensee of InterDigital's intellectual property allegedly essential for practicing 3G standards. InterDigital was on notice when it joined ARIB, when it agreed to comply with the ARIB IPR Policy, and when it made statements to ARIB

identifying IPR allegedly essential to the 3G standards. As a result, Samsung Electronics is an intended, third-party beneficiary of InterDigital's contract with ARIB, and Samsung can enforce InterDigital's promise to be prepared to grant FRAND licenses.

95. Under the terms of the ARIB IPR Policy, prior to the approval of a proposed standard, ARIB requests that members submit an effective statement that declares their willingness to "grant a non-exclusive and non-discriminatory license to the use of such Essential IPR on reasonable terms and conditions to anyone who uses such an ARIB Standard."

96. On information and belief, InterDigital has made statements to ARIB that InterDigital owned IPR allegedly essential to practicing 3G standards. With InterDigital's statements to ARIB, InterDigital made a binding and irrevocable promise that, as a condition to ARIB adopting standards that allegedly required InterDigital's IPR to implement, InterDigital would negotiate licenses in good faith and would be prepared to grant FRAND terms to all potential licensees.

97. InterDigital breached its contractual obligations to Samsung Electronics when InterDigital refused to negotiate licenses in good faith and when it failed to make available FRAND terms.

98. As a result of InterDigital's breaches, Samsung Electronics has been injured in its business or property through the loss of past, present, and future profits, by the loss of customers and potential customers, by the loss of goodwill and product image, and by the prospective damage to its handset business.

99. As a result of Samsung Electronics' injuries, Samsung Electronics seeks damages in an amount to be proven at trial.

100. As a result of Samsung Electronics' injuries, Samsung Electronics further seeks specific performance of InterDigital's contractual obligations to negotiate licenses in good faith and to provide FRAND terms.

COUNT IX.
Breach of Contract (the ITU IPR Policy)

101. Samsung Electronics incorporates and re-alleges all of the averments contained in paragraphs 1 through 100 as if set forth fully herein.

102. As set forth above, the International Telecommunications Union ("ITU") is an SDO responsible for, among other things, the development of 3G wireless telecommunications standards.

103. Both Samsung Electronics and InterDigital are members of ITU. As members of ITU, Samsung Electronics and InterDigital entered into an actual or implied contract to comply with ITU's governing documents, including, but not limited to, ITU's Intellectual Property Rights Policy.

104. Under the terms of the ITU IPR Policy, prior to the approval of a proposed standard, ITU requests that IPR holders submit written statements declaring their willingness to "negotiate licenses with other parties on a non-discriminatory basis on reasonable terms and conditions."

105. On information and belief, InterDigital has made written statements to ITU that InterDigital owned IPR allegedly essential to practicing 3G standards. With InterDigital's statements to ITU, InterDigital made a binding and irrevocable promise that, as a condition to ITU adopting standards that allegedly required InterDigital's IPR to implement, InterDigital would negotiate licenses in good faith and would be prepared to grant FRAND terms to all potential licensees.

106. InterDigital breached its contractual obligations to Samsung Electronics when InterDigital refused to negotiate licenses in good faith and when it failed to provide FRAND terms.

107. As a result of InterDigital's breaches, Samsung Electronics has been injured in its business or property through the loss of past, present, and future profits, by the loss of customers and potential customers, by the loss of goodwill and product image, and by the prospective damage to its handset business.

108. As a result of Samsung Electronics' injuries, Samsung Electronics seeks damages in an amount to be proven at trial.

109. As a result of Samsung Electronics' injuries, Samsung Electronics further seeks specific performance of InterDigital's contractual obligations to negotiate licenses in good faith and to provide FRAND terms.

COUNT X.
Breach of Contract (the ITU IPR Policy),
with Samsung as an Intended, Third-Party Beneficiary

110. Samsung Electronics incorporates and re-alleges all of the averments contained in paragraphs 1 through 109 as if set forth fully herein.

111. Alternatively, InterDigital, as a member of ITU, entered into an actual or implied contract with ITU to comply with ITU's governing documents, including, but not limited to, ITU's IPR Policy.

112. InterDigital's contract with ITU created contractual rights in third parties, including Samsung Electronics as a potential licensee of InterDigital's intellectual property allegedly essential for practicing 3G standards. InterDigital was on notice when it joined ITU, when it agreed to comply with the ITU IPR Policy, and when it made written statements to ITU

identifying IPR allegedly essential to the 3G standards. As a result, Samsung Electronics is an intended, third-party beneficiary of InterDigital's contract with ITU, and Samsung Electronics can enforce InterDigital's promise to be prepared to grant FRAND licenses.

113. Under the terms of the ITU IPR Policy, prior to the approval of a proposed standard, ITU requests that IPR holders submit written statements declaring their willingness to "negotiate licenses with other parties on a non-discriminatory basis on reasonable terms and conditions."

114. On information and belief, InterDigital has made written statements to ITU that InterDigital owned IPR allegedly essential to practicing 3G standards. With InterDigital's statements to ITU, InterDigital made a binding and irrevocable promise that, as a condition to ITU adopting standards that allegedly required InterDigital's IPR to implement, InterDigital would negotiate licenses in good faith and would be prepared to grant FRAND terms to all potential licensees.

115. InterDigital breached its contractual obligations to Samsung Electronics when InterDigital refused to negotiate licenses in good faith and when it failed to provide FRAND terms.

116. As a result of InterDigital's breaches, Samsung Electronics has been injured in its business or property through the loss of past, present, and future profits, by the loss of customers and potential customers, by the loss of goodwill and product image, and by the prospective damage to its handset business.

117. As a result of Samsung Electronics' injuries, Samsung Electronics seeks damages in an amount to be proven at trial.

118. As a result of Samsung Electronics' injuries, Samsung Electronics further seeks specific performance of InterDigital's contractual obligations to negotiate licenses in good faith and to provide FRAND terms.

COUNT XI.
Promissory Estoppel

119. Samsung Electronics incorporates and re-alleges all of the averments contained in paragraphs 1 through 118 as if set forth fully herein.

120. In the alternative to its breach-of-contract claims set forth above, InterDigital expressly promised the wireless telecom SDOs, including ETSI, ATIS, TIA, ARIB, and ITU, all members of each of the wireless telecom SDOs, and any potential licensee of technology allegedly essential for compliance with the respective 3G wireless telecommunications standards, that InterDigital would be prepared to grant irrevocable licenses to its 3G IPR on FRAND terms.

121. Consistent with the purposes of standardization, InterDigital knew or reasonably should have expected that its promises to the wireless telecom SDOs would induce potential licensees, like Samsung Electronics, to take or refrain from taking certain actions.

122. In reliance on InterDigital's promises to license on FRAND terms its IPR allegedly essential for practicing 3G wireless standards, Samsung Electronics has taken substantial action to develop new products.

123. As set forth above, InterDigital has repeatedly failed to live up to its promises to provide licenses to its 3G IPR on FRAND terms.

124. As a result of Samsung Electronics' foreseeable, reasonable, and justifiable reliance on InterDigital's promises to the wireless telecom SDOs—promises that have not been fulfilled by InterDigital—Samsung Electronics has been injured.

125. Injustice to Samsung Electronics can only be avoided by enforcing InterDigital's promises completely.

126. As a result of InterDigital's failure to perform, Samsung Electronics seeks specific performance of InterDigital's promises to negotiate licenses to its 3G IPR allegedly essential to practice the 3G wireless standards in good faith and to provide FRAND license terms.

COUNT XII.
Unfair Business Practices

127. Samsung Electronics incorporates and re-alleges all of the averments contained in paragraphs 1 through 126 as if set forth fully herein.

128. As set forth above, InterDigital's anticompetitive and illegal conduct has injured and continues to injure Samsung Electronics and substantially injures California consumers of cellular handsets by raising prices, controlling output, and stemming innovation, all in violation of California Business & Professional Code § 17200 *et seq*.

129. In particular, in breach of its contractual commitments to the wireless telecom SDOs, InterDigital's refusal to license on FRAND terms its intellectual property allegedly essential to practicing 3G wireless telecommunications standards has injured Samsung Electronics by erecting an economically insurmountable barrier to entry into the handset market.

COUNT XIII.
Declaratory Judgment of Unenforceability

130. Samsung Electronics incorporates and re-alleges all of the averments contained in paragraphs 1 through 129 as if set forth fully herein.

131. On information and belief, InterDigital has declared to the wireless telecom SDOs that it allegedly owns patents and patent applications that are allegedly essential to practice 3G

wireless telecommunications standards. With each declaration that a patent or patent application is allegedly essential to practice a 3G standard, InterDigital irrevocably committed to provide licenses to each patent or patent application on FRAND terms.

132. InterDigital now refuses to provide a license to its allegedly essential 3G intellectual property on FRAND terms and has unilaterally decided to terminate license negotiations with Samsung unless it receives an offer from Samsung Electronics that is in the range of the amount sought by InterDigital in its earlier offers. None of InterDigital's earlier offers was on FRAND terms.

133. Samsung Electronics requests that this Court declare that InterDigital is estopped from, has waived, and is otherwise barred from enforcement of each and every patent or patent application that InterDigital has declared as allegedly essential to practicing any 3G wireless telecommunications standard promulgated by the wireless telecom SDOs as a result of InterDigital's refusal to honor its commitments to the SDOs and to potential licensees, like Samsung Electronics.

COUNT XIV.
Declaration of Express License, Patent Exhaustion and/or Implied License Under Qualcomm–IDC License Agreement

134. Samsung Electronics incorporates and re-alleges all of the averments contained in paragraphs 1 through 133 as if set forth fully herein.

135. On information and belief, InterDigital entered into a license agreement with Qualcomm Incorporated ("Qualcomm"), a nonparty to this action, in which InterDigital granted a license to Qualcomm to InterDigital's 3G patents and patent applications ("the Qualcomm–InterDigital License Agreement"). On information and belief, the Qualcomm–InterDigital License Agreement granted Qualcomm the contractual right to sublicense InterDigital's 3G patents and patent applications.

136. Samsung Electronics purchases chipsets from Qualcomm for use in Samsung Electronic's 3G handsets. Along with such purchase, Qualcomm has agreed to grant Samsung a sublicense to InterDigital's patents and patent applications ("the Qualcomm–Samsung Electronics Sublicense").

137. By authorizing Qualcomm's manufacture and sale of chipsets pursuant to the Qualcomm–InterDigital License Agreement, InterDigital has exhausted and/or impliedly licensed all rights in each and every patent falling under the Qualcomm–InterDigital License Agreement.

138. Samsung Electronics requests that this Court declare that Samsung Electronics is licensed to all of InterDigital's 3G patents and patent applications that are covered under the Qualcomm–InterDigital License Agreement as a result of Qualcomm's sublicense to Samsung Electronics in the Qualcomm–Samsung Electronics Sublicense, that the sale of Qualcomm's chipsets to Samsung exhausts all rights in each and every InterDigital patent falling under the Qualcomm–InterDigital License Agreement, and/or that Samsung Electronics has an implied license to all rights in each and every InterDigital patent falling under the Qualcomm–InterDigital License Agreement.

COUNT XV.
Declaration of Noninfringement and/or Invalidity of U.S. Patent No. 5,093,840

139. Samsung Electronics and Samsung Telecom incorporate and re-allege all of the averments contained in paragraphs 1 through 138 as if set forth fully herein.

140. This is an action for declaratory judgment of noninfringement and/or invalidity of U.S. Patent No. 5,093,840 ("the '840 patent"). A copy of the '840 patent is attached hereto as Exhibit A.

141. Samsung Electronics and Samsung Telecom's handsets do not infringe the '840 patent, either directly or indirectly, and/or the '840 patent is invalid for failure to comply with one or more requirements of Title 35, United State Code, including but not limited to 35 U.S.C. §§ 101, 102, 103, and 112.

142. There is an actual controversy, within the meaning of 28 U.S.C. §§ 2201 and 2202, between Samsung Electronics and Samsung Telecom and InterDigital as to (a) whether Samsung infringes the '840 patent and/or (b) whether the '840 patent is valid.

143. Samsung Electronics and Samsung Telecom desire and request a judicial determination and declaration of the respective rights and duties of the parties on the disputes recited in paragraphs 139 through 142 above. Such a determination and declaration are necessary and appropriate at this time so the parties may ascertain their respective rights and duties regarding the '840 patent.

COUNT XVI.
Declaration of Noninfringement and/or Invalidity of U.S. Patent No. 5,799,010

144. Samsung Electronics and Samsung Telecom incorporate and re-allege all of the averments contained in paragraphs 1 through 143 as if set forth fully herein.

145. This is an action for declaratory judgment of noninfringement and/or invalidity of U.S. Patent No. 5,799,010 ("the '010 patent"). A copy of the '010 patent is attached hereto as Exhibit B.

146. Samsung Electronics and Samsung Telecom's handsets do not infringe the '010 patent, either directly or indirectly, and/or the '010 patent is invalid for failure to comply with one or more requirements of Title 35, United State Code, including but not limited to 35 U.S.C. §§ 101, 102, 103, and 112.

147. There is an actual controversy, within the meaning of 28 U.S.C. §§ 2201 and

2202, between Samsung Electronics and Samsung Telecom and InterDigital as to (a) whether Samsung infringes the '010 patent and/or (b) whether the '010 patent is valid.

148. Samsung Electronics and Samsung Telecom desire and request a judicial determination and declaration of the respective rights and duties of the parties on the disputes recited in paragraphs 144 through 147 above. Such a determination and declaration are necessary and appropriate at this time so the parties may ascertain their respective rights and duties regarding the '010 patent.

COUNT XVII.
Declaration of Noninfringement and/or Invalidity of U.S. Patent No. 6,075,792

149. Samsung Electronics and Samsung Telecom incorporate and re-allege all of the averments contained in paragraphs 1 through 148 as if set forth fully herein.

150. This is an action for declaratory judgment of noninfringement and/or invalidity of U.S. Patent No. 6,075,792 ("the '792 patent"). A copy of the '792 patent is attached here to as Exhibit C.

151. Samsung Electronics and Samsung Telecom's handsets do not infringe the '792 patent, either directly or indirectly, and/or the '792 patent is invalid for failure to comply with one or more requirements of Title 35, United State Code, including but not limited to 35 U.S.C. §§ 101, 102, 103, and 112.

152. There is an actual controversy, within the meaning of 28 U.S.C. §§ 2201 and 2202, between Samsung Electronics and Samsung Telecom and InterDigital as to (a) whether Samsung infringes the '792 patent and/or (b) whether the '792 patent is valid.

153. Samsung Electronics and Samsung Telecom desire and request a judicial determination and declaration of the respective rights and duties of the parties on the disputes recited in paragraphs 149 through 152 above. Such a determination and declaration are

necessary and appropriate at this time so the parties may ascertain their respective rights and duties regarding the '792 patent.

COUNT XVIII.
Declaration of Noninfringement and/or Invalidity of U.S. Patent No. 6,151,332

154. Samsung Electronics and Samsung Telecom incorporate and re-allege all of the averments contained in paragraphs 1 through 153 as if set forth fully herein.

155. This is an action for declaratory judgment of noninfringement and/or invalidity of U.S. Patent No. 6,151,332 ("the '332 patent"). A copy of the '332 patent is attached here to as Exhibit D.

156. Samsung Electronics and Samsung Telecom's handsets do not infringe the '332 patent, either directly or indirectly, and/or the '332 patent is invalid for failure to comply with one or more requirements of Title 35, United State Code, including but not limited to 35 U.S.C. §§ 101, 102, 103, and 112.

157. There is an actual controversy, within the meaning of 28 U.S.C. §§ 2201 and 2202, between Samsung Electronics and Samsung Telecom and InterDigital as to (a) whether Samsung infringes the '332 patent and/or (b) whether the '332 patent is valid.

158. Samsung Electronics and Samsung Telecom desire and request a judicial determination and declaration of the respective rights and duties of the parties on the disputes recited in paragraphs 154 through 157 above. Such a determination and declaration are necessary and appropriate at this time so the parties may ascertain their respective rights and duties regarding the '332 patent.

COUNT XIX.
Declaration of Noninfringement and/or Invalidity of U.S. Patent No. 6,181,949

159. Samsung Electronics and Samsung Telecom incorporate and re-allege all of the averments contained in paragraphs 1 through 158 as if set forth fully herein.

160. This is an action for declaratory judgment of noninfringement and/or invalidity of U.S. Patent No. 6,181,949 ("the '949 patent"). A copy of the '949 patent is attached here to as Exhibit E.

161. Samsung Electronics and Samsung Telecom's handsets do not infringe the '949 patent, either directly or indirectly, and/or the '949 patent is invalid for failure to comply with one or more requirements of Title 35, United State Code, including but not limited to 35 U.S.C. §§ 101, 102, 103, and 112.

162. There is an actual controversy, within the meaning of 28 U.S.C. §§ 2201 and 2202, between Samsung Electronics and Samsung Telecom and InterDigital as to (a) whether Samsung infringes the '949 patent and/or (b) whether the '949 patent is valid.

163. Samsung Electronics and Samsung Telecom desire and request a judicial determination and declaration of the respective rights and duties of the parties on the disputes recited in paragraphs 159 through 162 above. Such a determination and declaration are necessary and appropriate at this time so the parties may ascertain their respective rights and duties regarding the '949 patent.

COUNT XX.
Declaration of Noninfringement and/or Invalidity of U.S. Patent No. 6,215,778

164. Samsung Electronics and Samsung Telecom incorporate and re-allege all of the averments contained in paragraphs 1 through 163 as if set forth fully herein.

165. This is an action for declaratory judgment of noninfringement and/or invalidity of U.S. Patent No. 6,215,778 ("the '778 patent"). A copy of the '778 patent is attached here to as Exhibit F.

166. Samsung Electronics and Samsung Telecom's handsets do not infringe the '778 patent, either directly or indirectly, and/or the '778 patent is invalid for failure to comply with

one or more requirements of Title 35, United State Code, including but not limited to 35 U.S.C. §§ 101, 102, 103, and 112.

167. There is an actual controversy, within the meaning of 28 U.S.C. §§ 2201 and 2202, between Samsung Electronics and Samsung Telecom and InterDigital as to (a) whether Samsung infringes the '778 patent and/or (b) whether '778 patent is valid.

168. Samsung Electronics and Samsung Telecom desire and request a judicial determination and declaration of the respective rights and duties of the parties on the disputes recited in paragraphs 164 through 167 above. Such a determination and declaration are necessary and appropriate at this time so the parties may ascertain their respective rights and duties regarding the '778 patent.

COUNT XXI.
Declaration of Noninfringement and/or Invalidity of U.S. Patent No. 6,289,004

169. Samsung Electronics and Samsung Telecom incorporate and re-allege all of the averments contained in paragraphs 1 through 168 as if set forth fully herein.

170. This is an action for declaratory judgment of noninfringement and/or invalidity of U.S. Patent No. 6,289,004 ("the '004 patent"). A copy of the '004 patent is attached here to as Exhibit G.

171. Samsung Electronics and Samsung Telecom's handsets do not infringe the '004 patent, either directly or indirectly, and/or the '004 patent is invalid for failure to comply with one or more requirements of Title 35, United State Code, including but not limited to 35 U.S.C. §§ 101, 102, 103, and 112.

172. There is an actual controversy, within the meaning of 28 U.S.C. §§ 2201 and 2202, between Samsung Electronics and Samsung Telecom and InterDigital as to (a) whether Samsung infringes the '004 patent and/or (b) whether the '004 patent is valid.

173. Samsung Electronics and Samsung Telecom desire and request a judicial determination and declaration of the respective rights and duties of the parties on the disputes recited in paragraphs 169 through 172 above. Such a determination and declaration are necessary and appropriate at this time so the parties may ascertain their respective rights and duties regarding the '004 patent.

COUNT XXII.
Declaration of Noninfringement and/or Invalidity of U.S. Patent No. 6,545,990

174. Samsung Electronics and Samsung Telecom incorporate and re-allege all of the averments contained in paragraphs 1 through 173 as if set forth fully herein.

175. This is an action for declaratory judgment of noninfringement and/or invalidity of U.S. Patent No. 6,545,990 ("the '990 patent"). A copy of the '990 patent is attached here to as Exhibit H.

176. Samsung Electronics and Samsung Telecom's handsets do not infringe the '990 patent, either directly or indirectly, and/or the '990 patent is invalid for failure to comply with one or more requirements of Title 35, United State Code, including but not limited to 35 U.S.C. §§ 101, 102, 103, and 112.

177. There is an actual controversy, within the meaning of 28 U.S.C. §§ 2201 and 2202, between Samsung Electronics and Samsung Telecom and InterDigital as to (a) whether Samsung infringes the '990 patent and/or (b) whether the '990 patent is valid.

178. Samsung Electronics and Samsung Telecom desire and request a judicial determination and declaration of the respective rights and duties of the parties on the disputes recited in paragraphs 174 through 177 above. Such a determination and declaration are necessary and appropriate at this time so the parties may ascertain their respective rights and duties regarding the '990 patent.

COUNT XXIII.
Declaration of Noninfringement and/or Invalidity of U.S. Patent No. 6,614,776

179. Samsung Electronics and Samsung Telecom incorporate and re-allege all of the averments contained in paragraphs 1 through 178 as if set forth fully herein.

180. This is an action for declaratory judgment of noninfringement and/or invalidity of U.S. Patent No. 6,614,776 ("the '776 patent"). A copy of the '776 patent is attached here to as Exhibit I.

181. Samsung Electronics and Samsung Telecom's handsets do not infringe the '776 patent, either directly or indirectly, and/or the '776 patent is invalid for failure to comply with one or more requirements of Title 35, United State Code, including but not limited to 35 U.S.C. §§ 101, 102, 103, and 112.

182. There is an actual controversy, within the meaning of 28 U.S.C. §§ 2201 and 2202, between Samsung Electronics and Samsung Telecom and InterDigital as to (a) whether Samsung infringes the '776 patent and/or (b) whether '776 patent is valid.

183. Samsung Electronics and Samsung Telecom desire and request a judicial determination and declaration of the respective rights and duties of the parties on the disputes recited in paragraphs 179 through 182 above. Such a determination and declaration are necessary and appropriate at this time so the parties may ascertain their respective rights and duties regarding the '776 patent.

Jury Demand

Samsung hereby respectfully requests a trial by jury on all issues so triable.

Prayer for Relief

WHEREFORE, Samsung respectfully requests that the Court enter judgment:

A. that Samsung Electronics is entitled to damages in an amount to be determined at

trial for Samsung's loss;

B. that each and every patent or patent application promoted by InterDigital to the wireless telecom SDOs is unenforceable as to Samsung Electronics due to unfair business practices and/or equitable estoppel;

C. that Samsung Electronics has a right to practice InterDigital's intellectual property incorporated into products purchased from Qualcomm;

D. that Samsung Electronics and Samsung Telecom do not infringe the '840, '010, '792, '332, '949, '778, '004, '990, and '776 patents;

E. that the '840, '010, '792, '332, '949, '778, '004, '990, and '776 patents are invalid;

F. that InterDigital must offer Samsung Electronics a license on FRAND terms for any patent claim that InterDigital contends or has alleged in any context is necessary to implement a standard adopted by an industry standard-setting group;

G. that Samsung is entitled to its costs and expenses of litigation, including attorneys' fees and expert witness fees; and

H. that Samsung is entitled to such other and further relief as the Court deems just and proper.

ASHBY & GEDDES

/s/ *Steven J. Balick*

Steven J. Balick (I.D. #2114)
John G. Day (I.D. #2403)
Lauren E. Maguire (I.D. #4261)
500 Delaware Avenue, 8th Floor
P.O. Box 1150
Wilmington, DE 19899
Telephone: (302) 654-1888
Facsimile: (302) 654-2067
sbalick@ashby-geddes.com
jday@ashby-geddes.com
lmaguire@ashby-geddes.com

Attorneys for Plaintiffs Samsung Telecommunications America LLP and Samsung Electronics Co., Ltd.

Of Counsel:

David J. Healey
J. Nicholas Bunch
WEIL, GOTSHAL & MANGES LLP
700 Louisiana Street, Suite 1600
Houston, Texas 77002
Telephone: (713) 546-5000
Facsimile: (713) 224-9511

David C. Radulescu
Charan Sandhu
WEIL, GOTSHAL & MANGES LLP
767 Fifth Avenue
New York, New York 10153
Telephone: (212) 310-8000
Facsimile: (212) 310-8007

Cabrach Connor
WEIL, GOTSHAL & MANGES LLP
8911 Capital of Texas Highway, Suite 1350
Austin, Texas 78758
Telephone: (512) 349-1930
Facsimile: (512) 527-0798

Dated: March 23, 2007
179151.1

EXHIBIT A

US005093840A

United States Patent [19]

Schilling

[11] Patent Number: 5,093,840

[45] Date of Patent: Mar. 3, 1992

[54] **ADAPTIVE POWER CONTROL FOR A SPREAD SPECTRUM TRANSMITTER**

[75] Inventor: **Donald L. Schilling**, Sands Point, N.Y.

[73] Assignee: **SCS Mobilecom, Inc.**, Port Washington, N.Y.

[21] Appl. No.: **614,816**

[22] Filed: **Nov. 16, 1990**

[51] **Int. Cl.**[5] **H04K 1/00**

[52] **U.S. Cl.** **375/1**; 455/33; 379/59; 380/34

[58] **Field of Search** 375/1, 102; 380/33, 380/34, 39, 40; 455/33, 59, 61, 103, 191, 212, 213, 224, 225; 379/59, 63

[56] **References Cited**

U.S. PATENT DOCUMENTS

3,838,342	9/1974	Bjorkman	375/1
4,189,677	2/1980	Cooper	375/1 X
4,285,060	8/1981	Cobb et al.	375/1 X
4,538,280	8/1985	Mosler, Jr. et al.	375/1
4,958,359	9/1990	Kato	375/1

Primary Examiner—Thomas H. Tarcza
Assistant Examiner—Tod Swann
Attorney, Agent, or Firm—David B. Newman, Jr. & Associates

[57] **ABSTRACT**

An apparatus for adaptive-power control of a spread-spectrum transmitter of a mobile station operating in a cellular-communications network using spread-spectrum modulation. A base station transmits a generic spread-spectrum signal and an APC-data signal. A mobile station has an acquisition circuit for acquiring and decoding the generic spread-spectrum signal, a detector for detecting a received power level of the generic spread-spectrum signal, a decoder for decoding the APC-data signal as a threshold, a differential amplifier for generating a comparison signal by comparing the received power level to the threshold, a transmitter for transmitting a transmitter spread-spectrum signal, an antenna, and a variable-gain device responsive to the comparison signal indicating an increase or decrease for adjusting a transmitter-power level of the transmitter spread-spectrum signal.

8 Claims, 3 Drawing Sheets

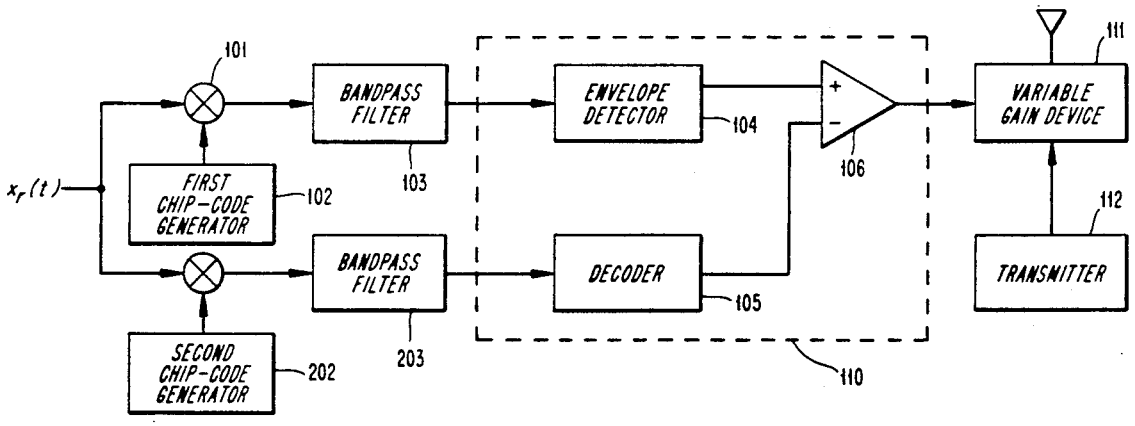

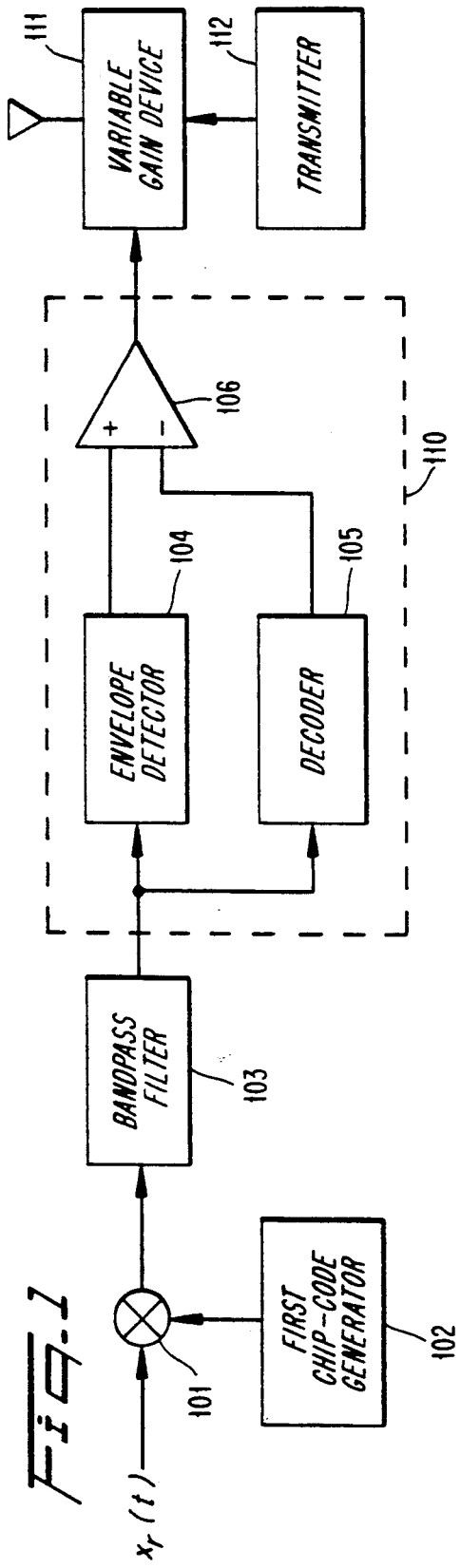
111
VARIABLE GAIN DEVICE
112
TRANSMITTER
106
110
104
105
ENVELOPE DETECTOR
DECODER
BANDPASS FILTER
103
FIRST CHIP-CODE GENERATOR
102
101
$x_r(t)$

Fig. 1

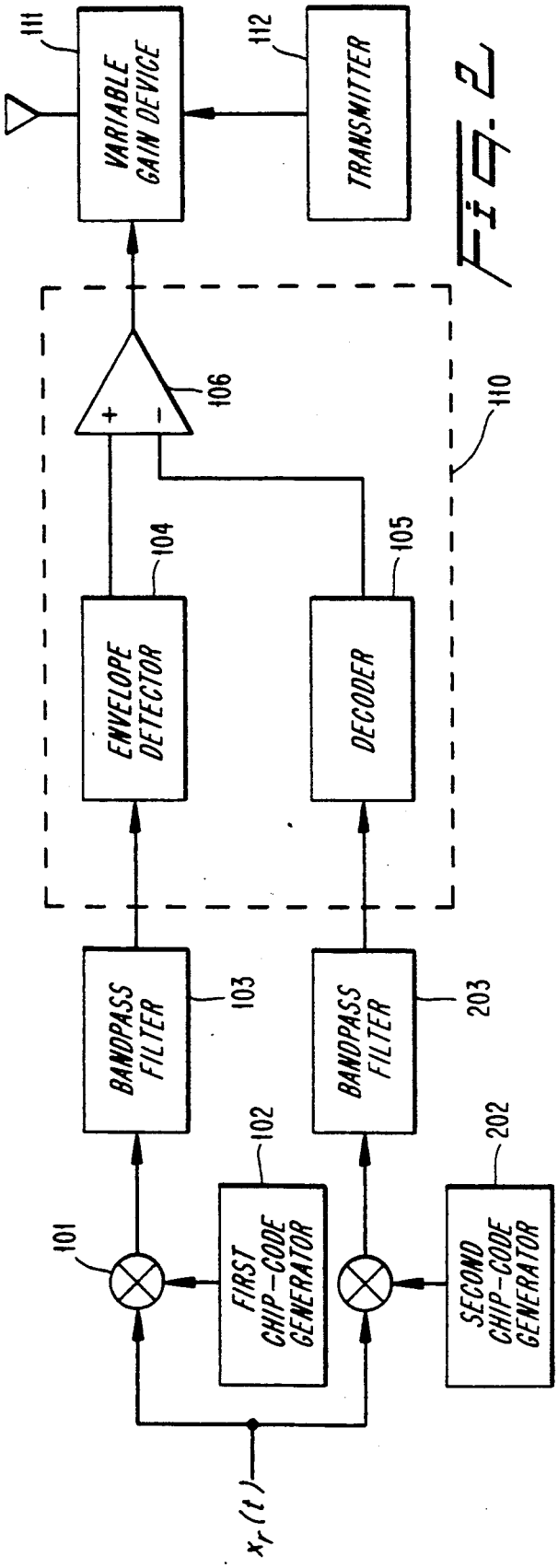
111
VARIABLE GAIN DEVICE
112
TRANSMITTER
106
110
104
105
ENVELOPE DETECTOR
DECODER
BANDPASS FILTER
103
BANDPASS FILTER
203
FIRST CHIP-CODE GENERATOR
102
SECOND CHIP-CODE GENERATOR
202
101
$x_r(t)$

Fig. 2

Fig. 3

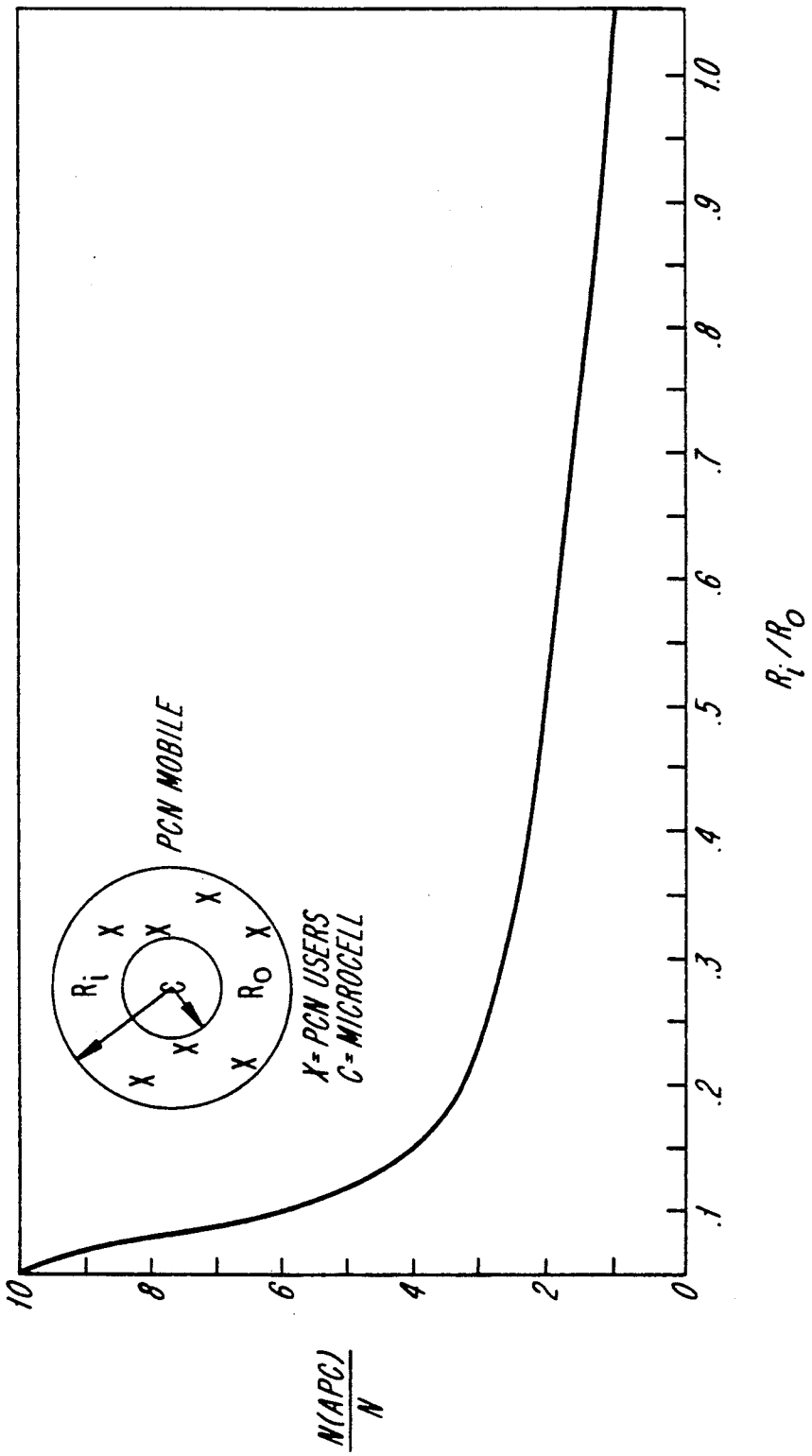
PCN MOBILE
X= PCN USERS
C= MICROCELL
R_i
R_o
C
X
10
8
6
4
2
0
.1
.2
.3
.4
.5
.6
.7
.8
.9
1.0
R_i/R_o
N(APC)/N

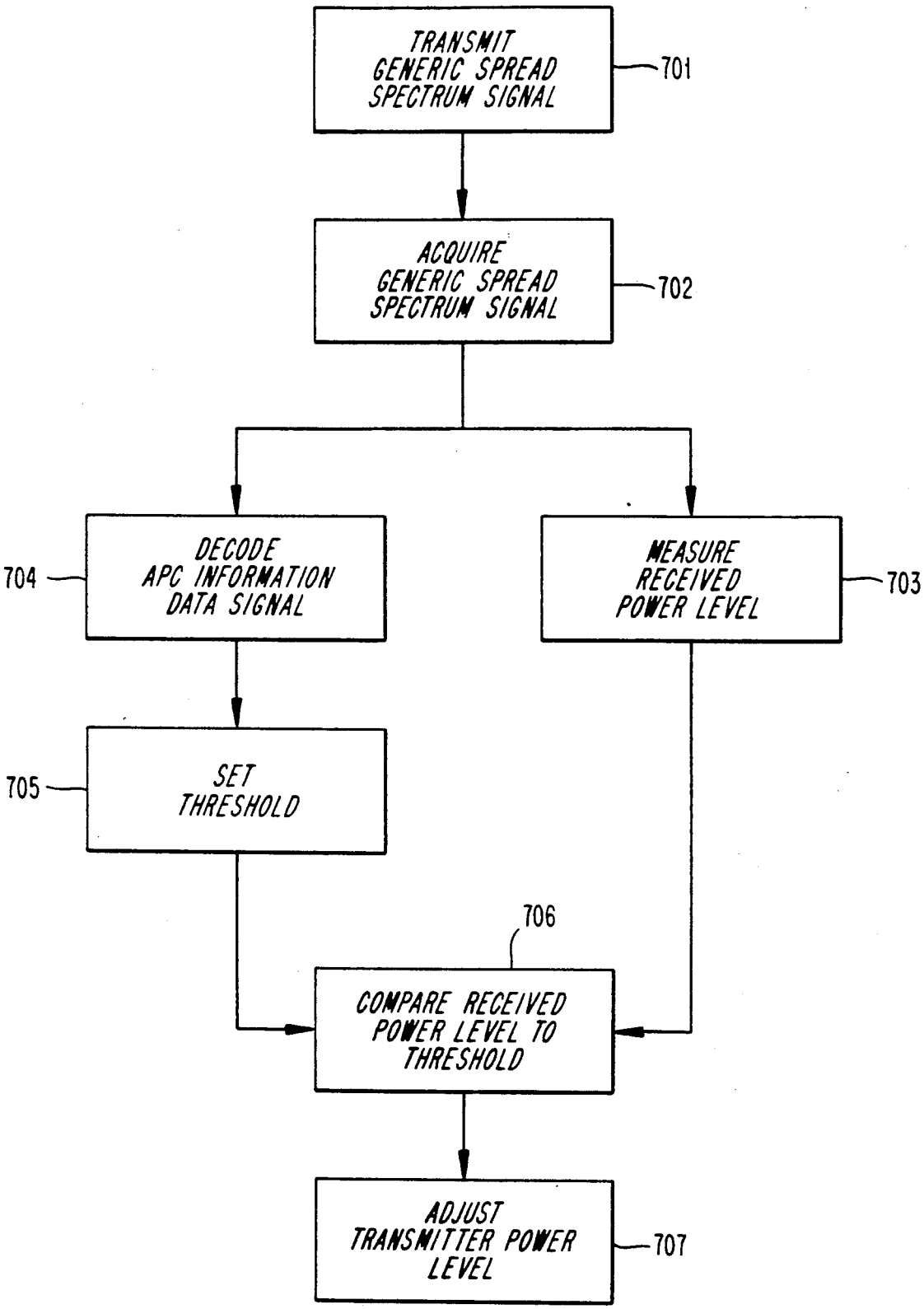
TRANSMIT GENERIC SPREAD SPECTRUM SIGNAL
701
ACQUIRE GENERIC SPREAD SPECTRUM SIGNAL
702
DECODE APC INFORMATION DATA SIGNAL
704
MEASURE RECEIVED POWER LEVEL
703
SET THRESHOLD
705
706
COMPARE RECEIVED POWER LEVEL TO THRESHOLD
ADJUST TRANSMITTER POWER LEVEL
707

Fig. 4

ADAPTIVE POWER CONTROL FOR A SPREAD SPECTRUM TRANSMITTER

BACKGROUND OF THE INVENTION

This invention relates to spread spectrum communications, and more particularly to an apparatus and method for adaptive power control of a spread-spectrum signal in a cellular, personal communications environment.

DESCRIPTION OF THE PRIOR ART

A spread-spectrum signal typically is generated by modulating an information-data signal with a chip-code signal. The information-data signal may come from a data device such as a computer, or an analog device which outputs an analog signal which has been digitized to an information-data signal, such as voice or video. The chip-code signal is generated by a chip-code where the time duration, T_c, of each chip is substantially less than a data bit or data symbol.

Spread spectrum provides a means for communicating in which a spread-spectrum signal occupies a bandwidth in excess of the minimum bandwidth necessary to send the same information. The band spread is accomplished using a chip code which is independent of an information-data signal. A synchronized reception with the chip-code at a receiver is used for despreading the spread-spectrum signal and subsequent recovery of data from the spread-spectrum signal.

Spread-spectrum modulation offers may advantages as a communications system for an office or urban environment. These advantages include reducing intentional and unintentional interference, combating multipath problems, and providing multiple access to a communications system shared by multiple users. Commercially, these applications include, but are not limited to, local area networks for computers and personal communications networks for telephone, as well as other data applications.

A cellular communications network using spread spectrum modulation for communicating between a base station and a multiplicity of users, requires control of the power level of a particular mobile user station. Within a particular cell, a mobile station near the base station of the cell may be required to transmit with a power level less than that when the mobile station is near an outer perimeter of the cell. This is done to ensure a constant power level at the base station, received from each mobile station.

In a first geographical region, such as an urban environment, the cellular architecture within the first geographical region may have small cells which are close to each other, requiring a low power level from each mobile user. In a second geographical region, such as a rural environment, the cellular architecture within the region may have large cells which are spread apart, requiring a relatively high power level from each mobile user. A mobile user who moves from the first geographical region to the second geographical region must adjust the power level of his transmitter, for meeting the requirements of a particular geographic region. Otherwise, if the mobile user travels from a sparsely populated region with fewand spread out cells using the relatively higher power level with his spread spectrum transmitter, to a densely populated region with many cells without reducing the power level of his spread spectrum transmitter, his spread spectrum transmitter

may cause undesirable interference within the cell in which he is located and/or to adjacent cells.

Accordingly, there is a need to have a spread spectrum apparatus and method for automatically controlling a mobile user's spread spectrum transmitter power level when operating in a cellular communications network.

OBJECTS OF THE INVENTION

An object of the invention is to provide an apparatus and method which controls the power level of a mobile station so that the power level received at the base station of each cell is the same for each mobile station.

Another object of the invention is to provide an apparatus and method for automatically and adaptively controlling the power level of a mobile user in a cellular communications network.

Another object of the invention is to provide a spread-spectrum apparatus and method which will allow operating a spread spectrum transmitter in different geographic regions, wherein each geographic region has a multiplicity of cells, and cells within a geographic region may have different size cells and transmitter power requirements.

A further object of the invention is a spread-spectrum apparatus and method which allows a large number of mobile users to interactively operate in a mobile cellular environment having different size cells and transmitter power requirements.

A still further object of the invention is a spread-spectrum apparatus and method which controls a power level of a mobile user in a cellular communications network using a simple circuit.

An additional object of the invention is an apparatus and method for automatically controlling a power level of a mobile user which is easy to implement.

SUMMARY OF THE INVENTION

According to the present invention, as embodied and broadly described herein, an apparatus for adaptive-power control (APC) of a spread-spectrum transmitter is provided. A plurality of mobile stations operate in a cellular-communications network using spread-spectrum modulation. A base station transmits a generic spread-spectrum signal and an APC-data signal. The APC-data signal may be transmitted with or separate from the generic spread-spectrum signal. Each mobile station comprises acquisition means, detector means, decoder means, difference means, transmitter means, an antenna, and variable-gain means. The detector means is coupled to the acquisition means. The decoder means is coupled to the acquisition means for decoding the APC-data signal as a threshold. The difference means is coupled to the detector means and the decoder means. The antenna is coupled to the transmitter means. The variable-gain means is coupled to the difference means and between the transmitter means and the antenna.

The acquisition means acquires the generic spread-spectrum signal transmitted from the base station. The detector means detects a received power level of the generic spread-spectrum signal. The decoder means decodes the APC-data signal as a threshold. The difference means generates a comparison signal by comparing the received power level to the threshold. The comparison signal may be an analog or digital data signal. The transmitter means transmits a transmitter spread-spectrum signal. The variable-gain means uses the com-

parison signal as a basis for adjusting a transmitter-power level of the transmitter spread-spectrum signal from the transmitter means.

The present invention also includes a method for automatic-power control of a spread-spectrum transmitter for a mobile station operating in a cellular-communications network using spread-spectrum modulation. A base station transmits a generic spread-spectrum signal and an APC-data signal. The APC-data signal typically is a spread-spectrum signal. Each mobile base station performs the steps of acquiring the generic spread-spectrum signal transmitted from the base station, and detecting a received power level of the generic spread-spectrum signal. The steps also include decoding the APC-data signal as a threshold, from the generic spread-spectrum signal, or from a signal or channel separate from the generic spread-spectrum signal. The method further includes comparing the received power level to the threshold, and adjusting a transmitter power level of a transmitter spread-spectrum signal in response to the comparison.

Additional objects and advantages of the invention will be set forth in part in the description which follows, and in part will be obvious from the description, or may be learned by practice of the invention. The objects and advantages of the invention also may be realized and attained by means of the instrumentalities and combinations particularly pointed out in the appended claims.

BRIEF DESCRIPTION OF THE DRAWINGS

The accompanying drawings, which are incorporated in and constitute a part of the specification, illustrate preferred embodiments of the invention, and together with the description serve to explain the principles of the invention.

FIG. **1** shows an adaptive power control receiver and transmitter according to the present invention;

FIG. **2** shows an adaptive power control receiver and transmitter according to the present invention;

FIG. **3** shows the relative effect of a multiplicity of users communicating with spread spectrum in a cellular environment with and without using adaptive power control; and

FIG. **4** is a flow chart of the method of the present invention.

DETAILED DESCRIPTION OF THE PREFERRED EMBODIMENTS

Reference will now be made in detail to the present preferred embodiments of the invention, examples of which are illustrated in the accompanying drawings, wherein like reference numerals indicate like elements throughout the several views.

The present invention assumes that a plurality of mobile stations operate in a cellular-communications network using spread-spectrum modulation. The cellular communications network has a plurality of geographical regions, with a multiplicity of cells within a geographical region. The size of the cells in a first geographical region may differ from the size of the cells in a second geographical region. In a first geographical region such as an urban environment, a cellular architecture within the region may have large cells which are close to each other. In a second geographical region such as a rural environment, a cellular architecture within the region may have small cells which are spread apart.

A mobile station while in the first geographical region may be required to transmit a higher power level than while in the second geographical region. This requirement might be due to an increased range of the mobile station from the base station. Within a particular cell, a mobile station near the base station of the cell may be required to transmit with a power level less than that when the mobile station is near an outer perimeter of the cell. This is done to ensure a constant power level at the base station, received from each mobile station.

In the present invention, a base station within a particular cell transmits a generic spread-spectrum signal and an APC-data signal. The APC-data signal may be transmitted with or separate from the generic spread-spectrum signal. For example, a spread-spectrum signal using a first chip code may be considered a first channel having the generic spread-spectrum signal, and a spread-spectrum signal using a second chip code may be considered a second channel. The APC-data signal may be transmitted in the same channel, i.e. the first channel, as the generic spread-spectrum signal, or in a second channel which is different from the generic spread-spectrum signal.

In the exemplary arrangement shown in FIG. **1**, an apparatus for adaptive-power control of a spread-spectrum transmitter is provided. Each mobile station comprises acquisition means, detector means, decoder means, difference means, transmitter means, an antenna, and variable-gain means. The apparatus, by way of example, may have the acquisition means embodied as a first product device **101**, a first chip-code generator **102**, and a bandpass filter **103**. The detector means may be embodied as envelope detector **104**. Other type detectors may be used with the present invention, such as square law detectors or coherent detectors, as is well known in the art. The decoder means may be embodied as decoder **105**. The difference means may be embodied as differential amplifier **106**, the transmitter means as transmitter **112** and the variable gain means as variable-gain device **111**. The variable-gain device **111** may be a variable-gain amplifier, a variable-gain attenuator or any device which performs the same function as the variable-gain device **111** and described herein.

The first product device **101** is coupled to the first chip-code generator **102** and to the bandpass filter **103**. The envelope detector **104** is coupled between the bandpass filter **103** and the differential amplifier **106**. The decoder **105** is coupled between the bandpass filter **103** and the differential amplifier **106**. The decoder **105** alternatively may be coupled to the output of the envelope detector **104**. The variable-gain device **111** is coupled to the differential amplifier **106** and between the transmitter **112** and antenna.

The decoder **105**, as illustratively shown in FIG. **2**, alternatively may be coupled between a second bandpass filter **203** and differential amplifier **106**. In this particular embodiment, the second bandpass filter **203** is coupled to a second product device **201**. The second product device **201** is connected to a second chip-code generator **202**. The embodiment of FIG. **2** could be used where the APC-data signal is transmitted over the second channel simultaneously while the generic spread-spectrum signal is transmitted over the first channel. The second channel uses a spread-spectrum signal with a second chip code, and the second chip-code generator **202** generates a second chip-code signal using the second chip code.

The product device **101**, FIGS. **1** or **2**, using a first chip-code signal from the first chip-code generator **102** acquires the generic spread-spectrum signal transmitted from the base station. The first chip-code signal has the same chip code as the generic spread-spectrum signal. The envelope detector **104** detects a received power level of the generic spread-spectrum signal. The received power level may be measured at the detector.

The decoder **105** decodes the APC-data signal from the generic spread-spectrum signal as a threshold. More particularly, data which establishes or sets the threshold for differential amplifier **106** is sent with the APC-data signal.

The differential amplifier **106** generates a comparison signal by comparing the received power level of the generic spread-spectrum signal to the threshold. The differential amplifier **106** may employ a differential amplifier or other circuits for performing the comparison function.

The transmitter **112** transmits a transmitter spread-spectrum signal. The variable-gain device **111** using the comparison signal, adjusts a transmitter-power level of the transmitter spread-spectrum signal from the transmitter. The variable-gain device **111** may be realized with a variable-gain amplifier, a variable-gain attenuator, or an equivalent device which can adjusts the power level of the transmitter spread-spectrum signal.

In operation, a base station in a cell may transmit the generic spread-spectrum signal on a continuous basis or on a repetitive periodic basis. Mobile stations within the cell receive the generic spread-spectrum signal. The received generic spread-spectrum signal is acquired and despread with the first chip-code signal from first chip-code generator **102** and first product device **101**. The despread generic spread-spectrum signal is filtered through bandpass filter **103**. The mobile station detects the despread generic spread-spectrum signal using envelope detector **104**, and measures the received power level of the generic spread-spectrum signal.

The APC-data signal may be transmitted on the same channel as the generic spread-spectrum signal using the same chip code as the generic spread-spectrum signal. In this case, the APC-data signal is transmitted at a different time interval from when the generic spread-spectrum signal is transmitted. This format allows the mobile station to acquire synchronization with the first chip-code, using the generic spread-spectrum signal.

As an alternative, the APC-data signal may be transmitted on a different coded channel using a second chip code. In the latter case, the second spread-spectrum signal having the APC-data signal would be acquired by the second chip-code generator **202** and second product device **201**. In either case, the APC-data signal is decoded using decoder **105**. Further, the APC-data signal may be time division multiplexed or frequency division multiplexed with the generic spread-spectrum signal.

The decoder **105** decodes from the APC-data signal the value of the threshold for use by differential amplifier **106**. For example, if there were eight levels for which to set the threshold level, then at minimum, a three bit word may be used with the APC-data signal to transmit the threshold to the mobile station. The threshold is used to adjust and or set the threshold of the differential amplifier **106**. Accordingly, the received power level from envelope detector **104** is compared to the threshold of the differential amplifier **106**.

If the received power level is greater than the threshold, then the variable-gain device **111** would decrement or decrease the transmitter spread-spectrum power level. If the received power level is less than the threshold at differential amplifier **106**, then the variable-gain device **111** increases the transmitter spread-spectrum power.

The APC circuit **110** of FIGS. **1** and **2** may be built on a digital signal processor chip. An analog to digital converter located at the output of the bandpass filter **103** would convert the received signal to a data signal. The envelope detector **104**, decoder **105** and differential amplifier **106** may be implemented as part of digital signal processing functions on the digital signal processor (DSP) chip. The analog to digital converters may be included on the DSP chip.

FIG. **3** shows the advantage of using an adaptive power control apparatus with a mobile station in a personal communications network. The number of adaptive power control mobile stations, N(APC), versus the number of mobile stations which can be used in a similar region, N, is plotted with respect to an inner radius, R_i, and an outer radius, R_o. When the inner radius goes to zero, using spread spectrum as code division multiplex, the number of users with adaptive power control who can operate within a cell, is approximately ten times the number of users without adaptive power control who can operate within the cell.

The present invention also includes a method for automatic-power control of a spread-spectrum transmitter for a mobile station operating in a cellular-communications network using spread-spectrum modulation. Referring to FIG. **4**, a base station transmits **701** a generic spread-spectrum signal and an APC information-data signal. Each mobile base station performs the steps of acquiring **702** the generic spread-spectrum signal transmitted from the base station, and detecting **703** a received power level of the generic spread-spectrum signal. The steps also include decoding **704** the APC-data signal as a threshold, from the generic spread-spectrum signal, or from a separate signal from the generic spread-spectrum signal. A threshold is set **705** from the APC-data signal. The method further includes comparing **706** the received power level to the threshold, and adjusting **707** a transmitter power level of a transmitter spread-spectrum signal in response to the comparison.

It will be apparent to those skilled in the art that various can be made to the method and apparatus for adaptively controlling a power level of a spread spectrum signal in a cellular environment of the instant invention with out departing from the scope or spirit of the invention, and it is intended that the present invention cover modifications and variations of the method and apparatus for adaptively controlling a power level of a spread spectrum signal in a cellular environment provided they come in the scope of the appended claims and their equivalents.

I claim:

1. An apparatus for adaptive-power control of a spread-spectrum transmitter of a mobile station operating in a cellular-communications network using spread-spectrum modulation, comprising:

a base station for transmitting a generic spread-spectrum signal and an APC-data signal;

a multiplicity of said mobile stations, each mobile station having

an acquisition circuit for acquiring and decoding the generic spread-spectrum signal;

a detector coupled to said acquisition circuit for detecting a received power level of the generic spread-spectrum signal;

a decoder coupled to said acquisition circuit for decoding the APC-data signal as a threshold;

a differential amplifier coupled to said detector and said decoder for generating a comparison signal by comparing the received power level to said threshold;

a transmitter for transmitting a transmitter spread-spectrum signal;

an antenna coupled to said transmitter; and

a variable-gain device coupled to said differential amplifier and between said transmitter and said antenna, responsive to said comparison signal indicating an increase or decrease for adjusting a transmitter-power level of the transmitter spread-spectrum signal from said transmitter.

2. An apparatus for adaptive-power control of a spread-spectrum transmitter of a plurality of mobile stations operating in a cellular-communications network using spread-spectrum modulation, wherein a base station transmits a generic spread-spectrum signal and an APC-data signal, each mobile station comprising:

acquisition means for acquiring and decoding the generic spread-spectrum signal;

detector means for detecting a received power level of the generic spread-spectrum signal;

decoder means for decoding the APC-data signal as a threshold;

differential means for generating a comparison signal by comparing the received power level to said threshold;

transmitter means for transmitting a transmitter spread-spectrum signal;

an antenna; and

variable-gain means responsive to said comparison signal for adjusting a transmitter-power level of the transmitter spread-spectrum signal from said transmitter.

3. The apparatus as set forth in claim 2 wherein said acquisition means includes:

a first chip-code generator;

a first bandpass filter; and

a first product device coupled to said first chip code generator and said bandpass filter.

4. The apparatus as set forth in claim 2 wherein said differential means includes:

a differential amplifier.

5. The apparatus as set forth in claim 2 wherein said decoder means includes:

a data demodulator.

6. The apparatus as set forth in claim 2 wherein said variable-gain means includes:

a variable-gain attenuator.

7. The apparatus as set forth in claim 2 wherein said variable-gain means includes:

a variable-gain amplifier.

8. A method for adaptive-power control of a spread-spectrum transmitter of a plurality of mobile stations operating in a cellular-communication network using spread-spectrum modulating, wherein a base station transmits a generic spread-spectrum signal and an APC-data signal, said method comprising the steps at each mobile station, of:

acquiring and decoding the generic spread-spectrum signal;

detecting a received power level of the generic spread-spectrum signal;

decoding the APC-data signal as a threshold;

generating a comparison signal by comparing the received power level to said threshold;

transmitting a transmitter spread-spectrum signal; and

adjusting a transmitter-power level of the transmitter spread-spectrum signal from said transmitter using said comparison signal.

* * * * *

EXHIBIT B

US005799010A

United States Patent [19]

Lomp et al.

[11] Patent Number: 5,799,010

[45] Date of Patent: Aug. 25, 1998

[54] **CODE DIVISION MULTIPLE ACCESS (CDMA) COMMUNICATION SYSTEM**

[75] Inventors: **Gary Lomp**, Centerpot; **John Kowalski**, Hempstead; **Fatih Ozluturk**, Port Washington; **Avi Silverberg**, Commack; **Robert Regis**, Huntington; **Michael Luddy**, Sea Cliff, all of N.Y.; **Alexander Marra**, Hoboken, N.J.; **Alexander Jacques**, Mineola, N.Y.

[73] Assignee: **Interdigital Technology Corporation**, Wilmington, Del.

[21] Appl. No.: **669,775**

[22] Filed: **Jun. 27, 1996**

Related U.S. Application Data

[60] Provisional application No. 60/000,775 Jun. 30, 1995.

[51] **Int. Cl.**[6] **H04J 13/02**; H04B 7/216

[52] **U.S. Cl.** **370/335**; 370/342; 375/208

[58] **Field of Search** 370/203, 208, 370/209, 320, 328, 329, 335, 342, 441, 479; 375/200, 206, 208, 354, 362, 365, 367; 455/31.1, 33.1, 38.1, 53.1, 54.1, 67.1, 226.1, 422, 507, 517

[56] **References Cited**

U.S. PATENT DOCUMENTS

4,901,307	2/1990	Gilhousen et al.	370/320
5,022,049	6/1991	Abrahamson et al.	375/200

(List continued on next page.)

FOREIGN PATENT DOCUMENTS

0464839A2	1/1992	European Pat. Off. .
0526106A2	2/1993	European Pat. Off. .
0654913A2	5/1995	European Pat. Off. .
0656716A1	6/1995	European Pat. Off. .
0668662A1	8/1995	European Pat. Off. .
3743731A1	7/1989	Germany .

(List continued on next page.)

OTHER PUBLICATIONS

"Code Division Multiple Access (CDMA)", Franz Josef Hagmanns, Volker Hespelt, 8273 ANT Nachrichtentechnische Berichte (1993) Aug., No. 10, Backnang, DE, pp. 64–71.

(List continued on next page.)

Primary Examiner—Alpus H. Hsu
Assistant Examiner—Kwang B. Yao
Attorney, Agent, or Firm—Ratner & Prestia

[57] **ABSTRACT**

A multiple access, spread-spectrum communication system processes a plurality of information signals received by a Radio Carrier Station (RCS) over telecommunication lines for simultaneous transmission over a radio frequency (RF) channel as a code-division-multiplexed (CDM) signal to a group of Subscriber Units (SUs). The RCS receives a call request signal that corresponds to a telecommunication line information signal, and a user identification signal that identifies a user to receive the call. The RCS includes a plurality of Code Division Multiple Access (CDMA) modems, one of which provides a global pilot code signal. The modems provide message code signals synchronized to the global pilot signal. Each modem combines an information signal with a message code signal to provide a CDM processed signal. The RCS includes a system channel controller is coupled to receive a remote call. An RF transmitter is connected to all of the modems to combine the CDM processed signals with the global pilot code signal to generate a CDM signal. The RF transmitter also modulates a carrier signal with the CDM signal and transmits the modulated carrier signal through an RF communication channel to the SUs. Each SU includes a CDMA modem which is also synchronized to the global pilot signal. The CDMA modem despreads the CDM signal and provides a despread information signal to the user. The system includes a closed loop power control system for maintaining a minimum system transmit power level for the RCS and the SUs, and system capacity management for maintaining a maximum number of active SUs for improved system performance.

9 Claims, 35 Drawing Sheets

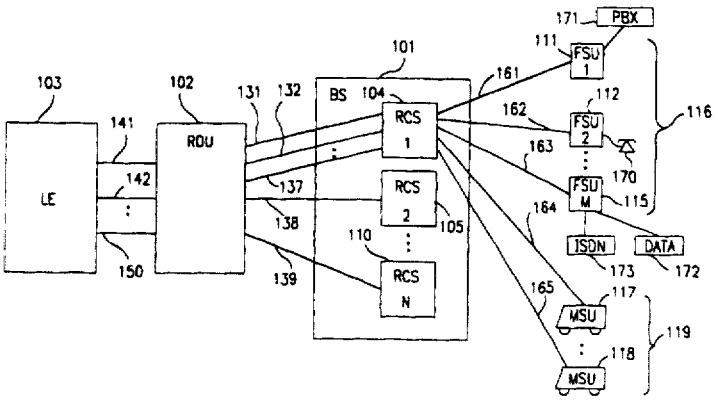

U.S. PATENT DOCUMENTS

5,084,900	1/1992	Taylor	370/320
5,093,840	3/1992	Schilling	375/200
5,103,459	4/1992	Gilhousen et al.	370/209
5,109,390	4/1992	Gilhousen et al.	370/335
5,166,951	11/1992	Schilling	375/200
5,193,094	3/1993	Viterbi	371/43.7
5,204,876	4/1993	Bruckert et al.	375/200
5,228,054	7/1993	Rueth et al.	370/479
5,228,056	7/1993	Schilling	375/200
5,237,586	8/1993	Bottomley	370/206
5,241,690	8/1993	Larsson et al.	455/522
5,245,629	9/1993	Hall	375/200
5,253,268	10/1993	Omura et al.	375/200
5,257,283	10/1993	Gilhousen et al.	375/200
5,260,967	11/1993	Schilling	370/342
5,265,119	11/1993	Gilhoussen et al.	370/335
5,267,262	11/1993	Wheatley, III	375/200
5,283,536	2/1994	Wheatley, III et al.	330/279
5,295,152	3/1994	Gudmundson et al.	370/342
5,299,226	3/1994	Schilling	375/200
5,299,228	3/1994	Hall	370/335
5,309,474	5/1994	Gilhousen et al.	370/209
5,327,455	7/1994	DeGaudenzi et al.	370/207
5,327,467	7/1994	DeGaudenzi et al.	375/356
5,329,547	7/1994	Ling	375/342
5,341,396	8/1994	Higgins et al.	375/206
5,345,598	9/1994	Dent	455/522
5,347,536	9/1994	Meehan	375/210
5,349,606	9/1994	Lovell et al.	375/206
5,373,502	12/1994	Turban	370/441
5,377,183	12/1994	Dent	370/335
5,392,287	2/1995	Tiedemann, Jr. et al.	370/311
5,396,516	3/1995	Padovani et al.	375/225
5,404,376	4/1995	Dent	375/200
5,414,728	5/1995	Zehavi	375/200
5,414,729	5/1995	Fenton	375/209
5,416,797	5/1995	Gilhousen et al.	370/209
5,420,896	5/1995	Schilling	370/479
5,430,760	7/1995	Dent	375/200
5,440,597	8/1995	Chung et al.	375/200
5,442,662	8/1995	Fukasawa et al.	370/342
5,488,629	1/1996	Takahashi et al.	375/206
5,519,736	5/1996	Ishida	375/367
5,528,624	6/1996	Kaku et al.	375/206
5,559,790	9/1996	Yano et al.	370/342

FOREIGN PATENT DOCUMENTS

3743732A1	7/1989	Germany .
WO93/07702	4/1993	WIPO .
WO95/03652	2/1995	WIPO .
WO97/02665	1/1997	WIPO .

OTHER PUBLICATIONS

"CDMA and ATM–zwei Technologien, ein Ziel", 2323 Telcom Report (Siemens) 18(1995) Maerz/Apr., No. 2, Munchen, DE, pp. 60–63.
Search Report, Apr. 10, 1997.
Search Report, Apr. 15, 1997.
Search Report, Apr. 17, 1997.
Search Report, Apr. 29, 1997.
Search Report, Mar. 5, 1997.
International Search Report, Jan. 14, 1997.

FIG. 1

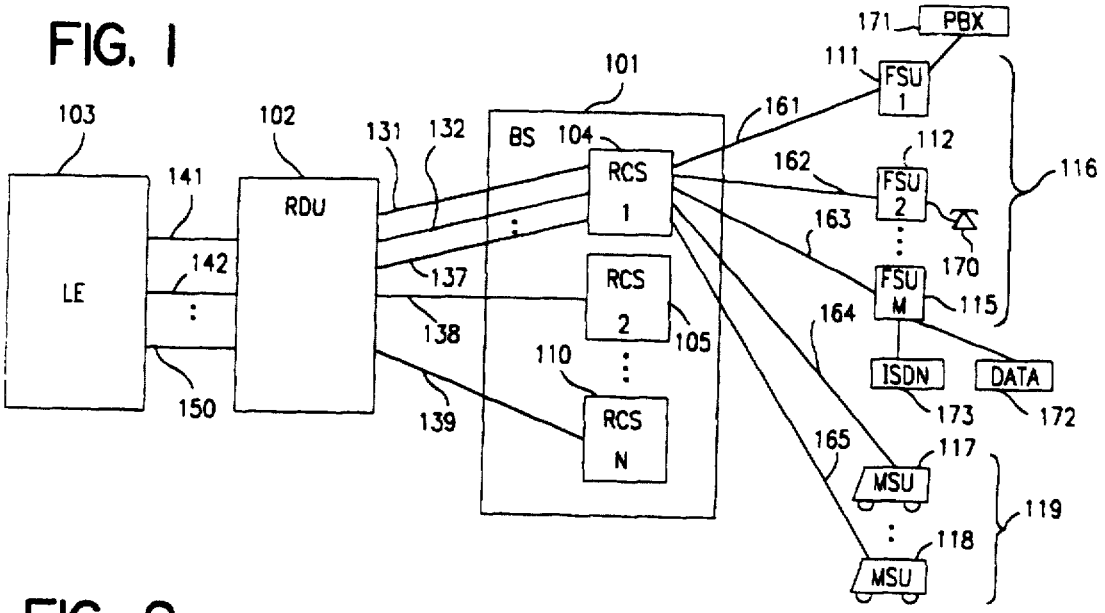

FIG. 2a

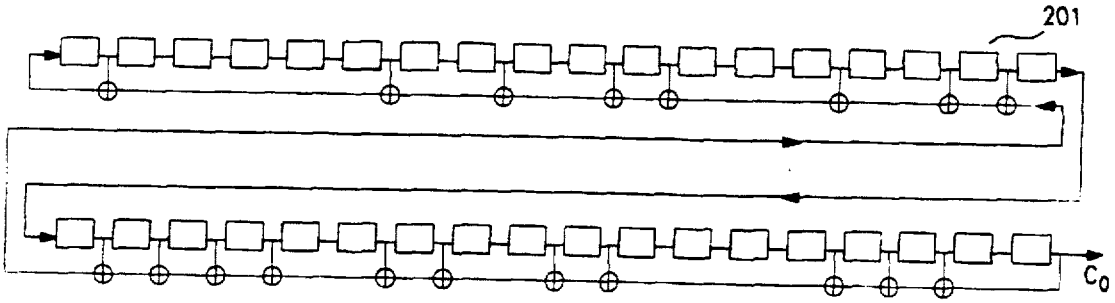

FIG. 2b

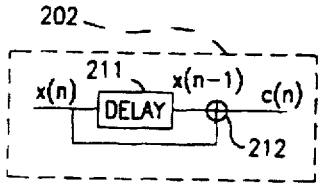

FIG. 2c

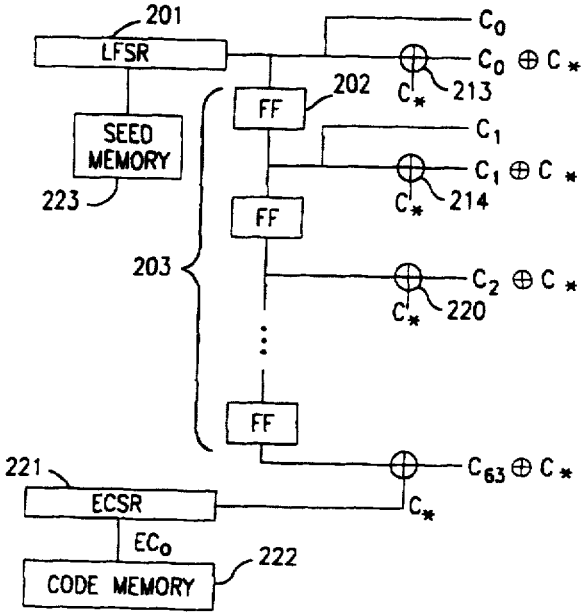

FIG.2d

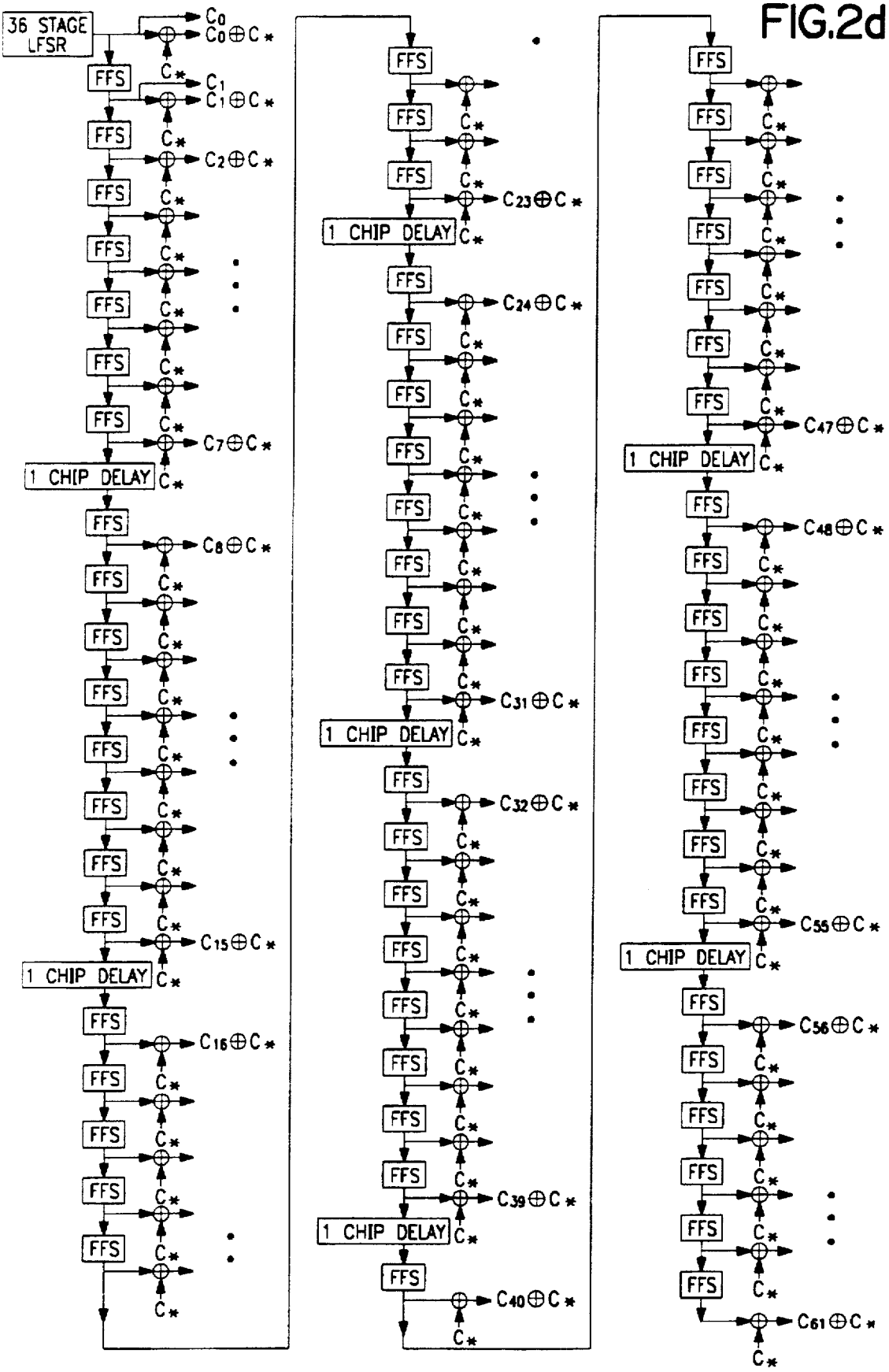
36 STAGE LFSR
FFS
1 CHIP DELAY
C*
C0
C0⊕C*
C1
C1⊕C*
C2⊕C*
C7⊕C*
C8⊕C*
C15⊕C*
C16⊕C*
C23⊕C*
C24⊕C*
C31⊕C*
C32⊕C*
C39⊕C*
C40⊕C*
C47⊕C*
C48⊕C*
C55⊕C*
C56⊕C*
C61⊕C*

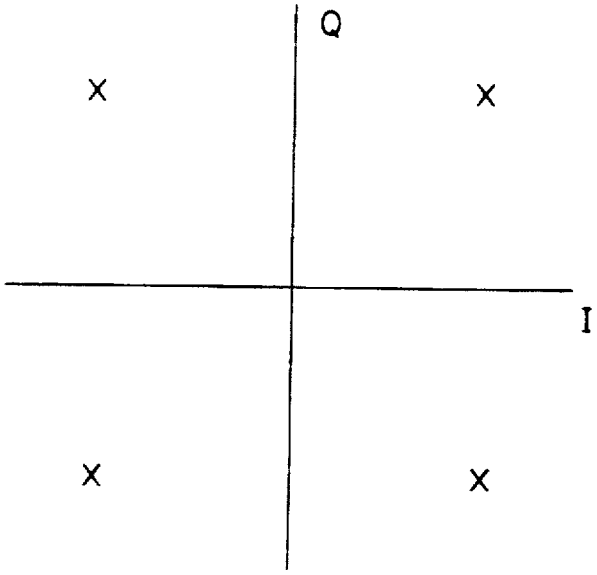

FIG. 3a

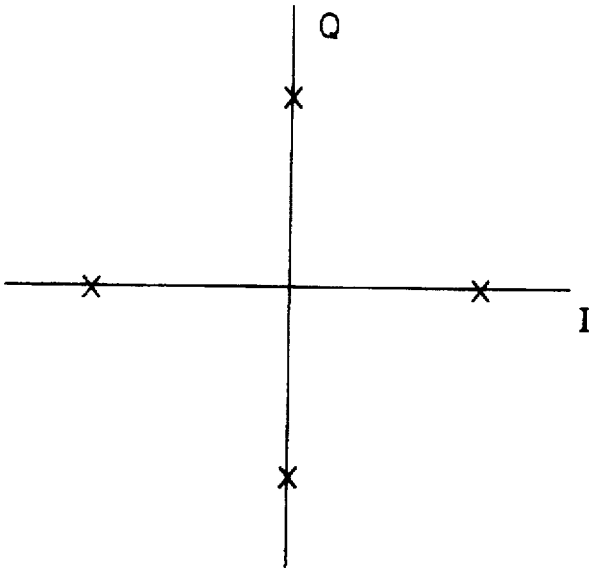

FIG. 3b

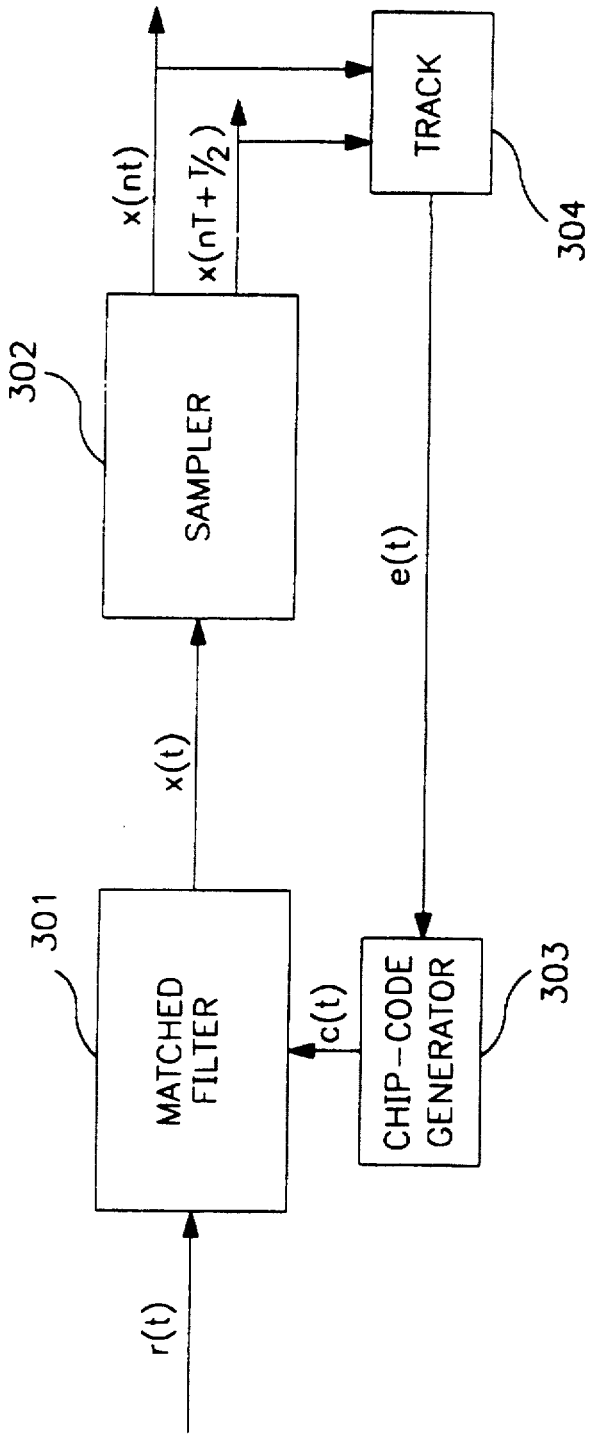
TRACK
304
x(nt)
x(nT+T/2)
302
SAMPLER
e(t)
x(t)
301
MATCHED FILTER
c(t)
CHIP-CODE GENERATOR
303
r(t)

FIG. 3c

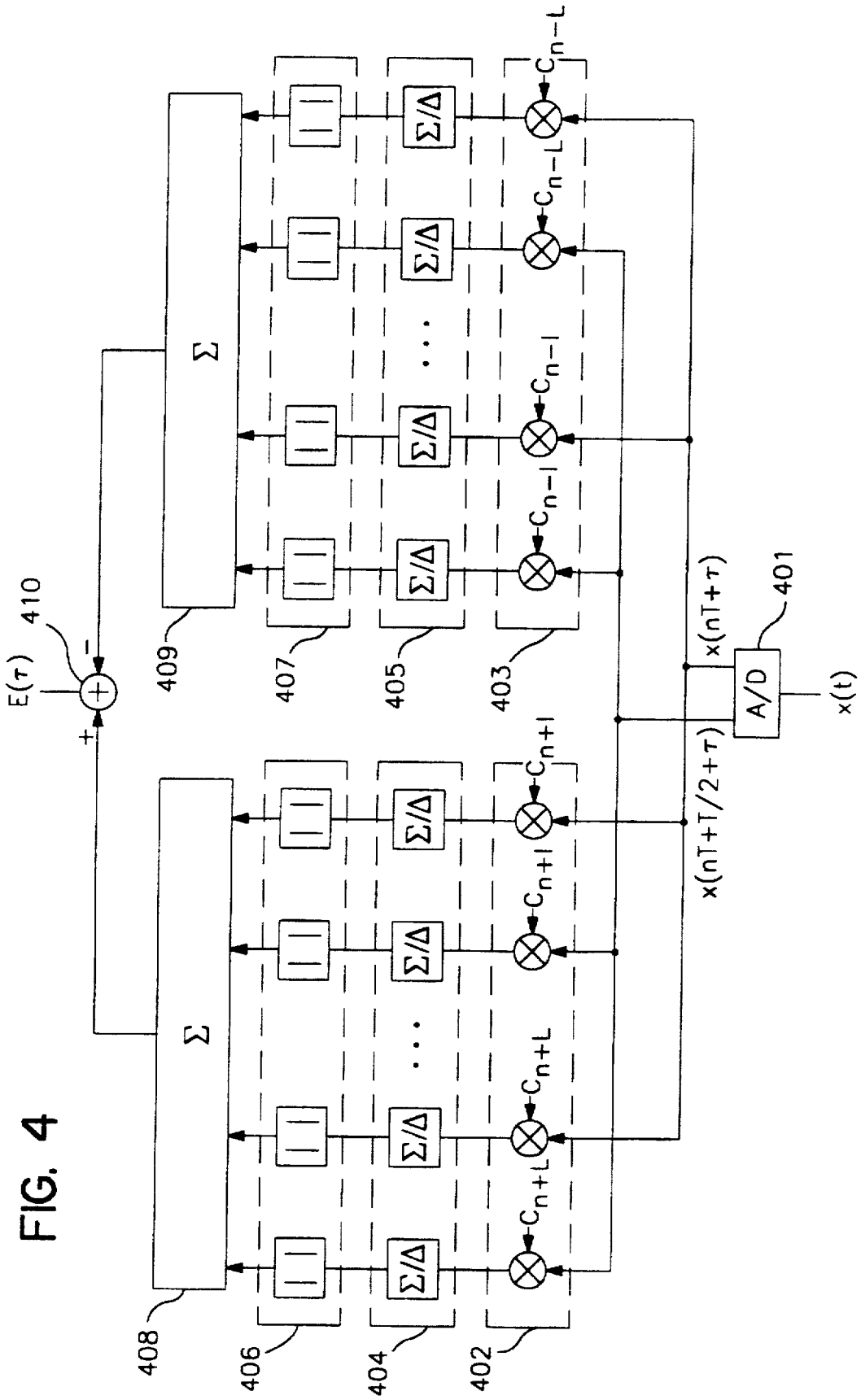
C_{n-L}
C_{n-L}
C_{n-1}
C_{n-1}
C_{n+1}
C_{n+1}
C_{n+L}
C_{n+L}
Σ/Δ
Σ
A/D
401
410
E(τ)
x(nT+τ)
x(nT+T/2+τ)
x(t)
403
405
407
409
402
404
406
408

FIG. 4

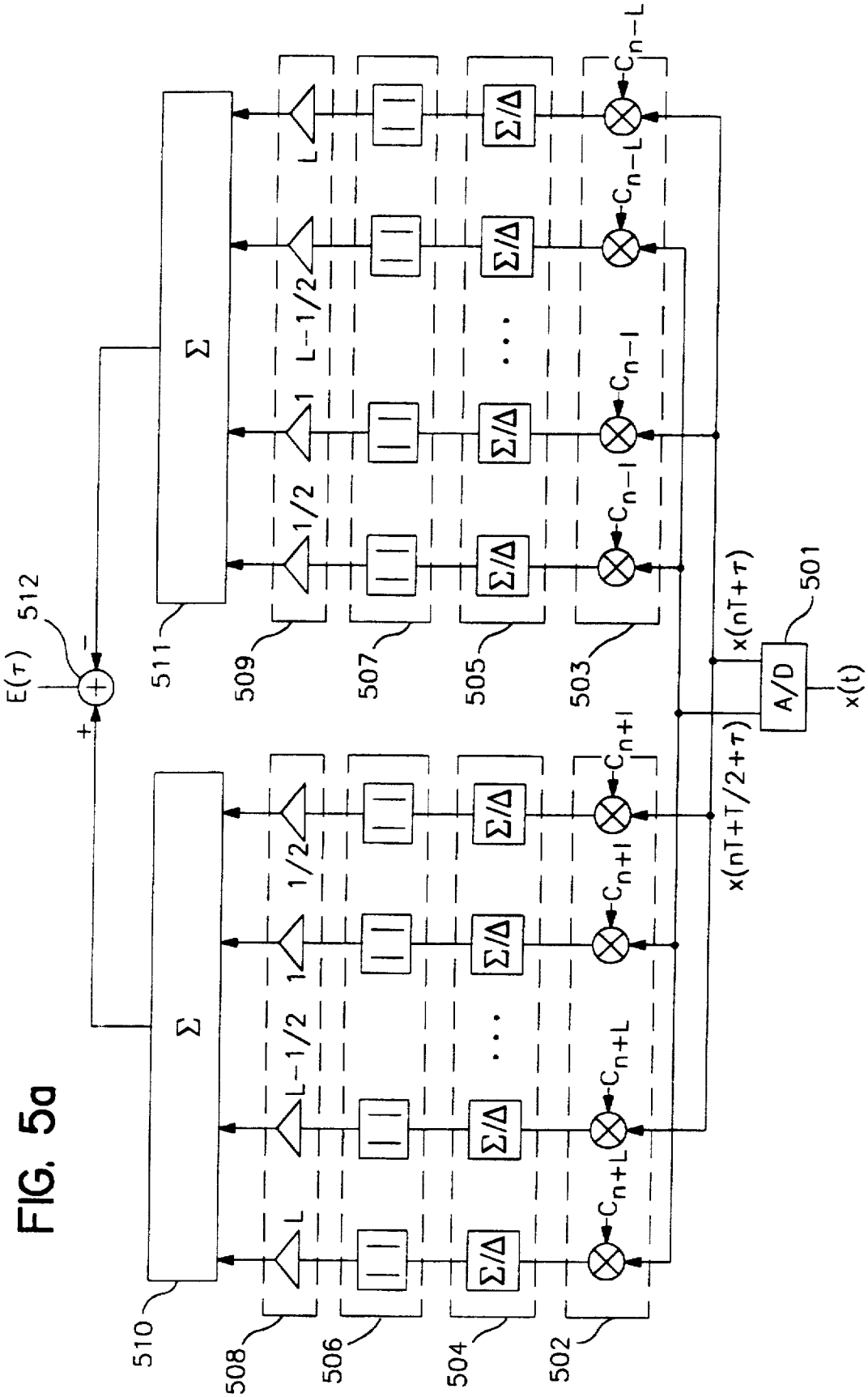
E(τ)
512
+
−
Σ
511
L
L-1/2
1
1/2
Σ/Δ
509
507
505
503
C_{n-L}
C_{n-L}
C_{n-1}
C_{n-1}
x(nT+τ)
501
A/D
x(t)
x(nT+T/2+τ)
C_{n+1}
C_{n+1}
C_{n+L}
C_{n+L}
Σ
510
508
506
504
502

FIG. 5a

FIG. 5b

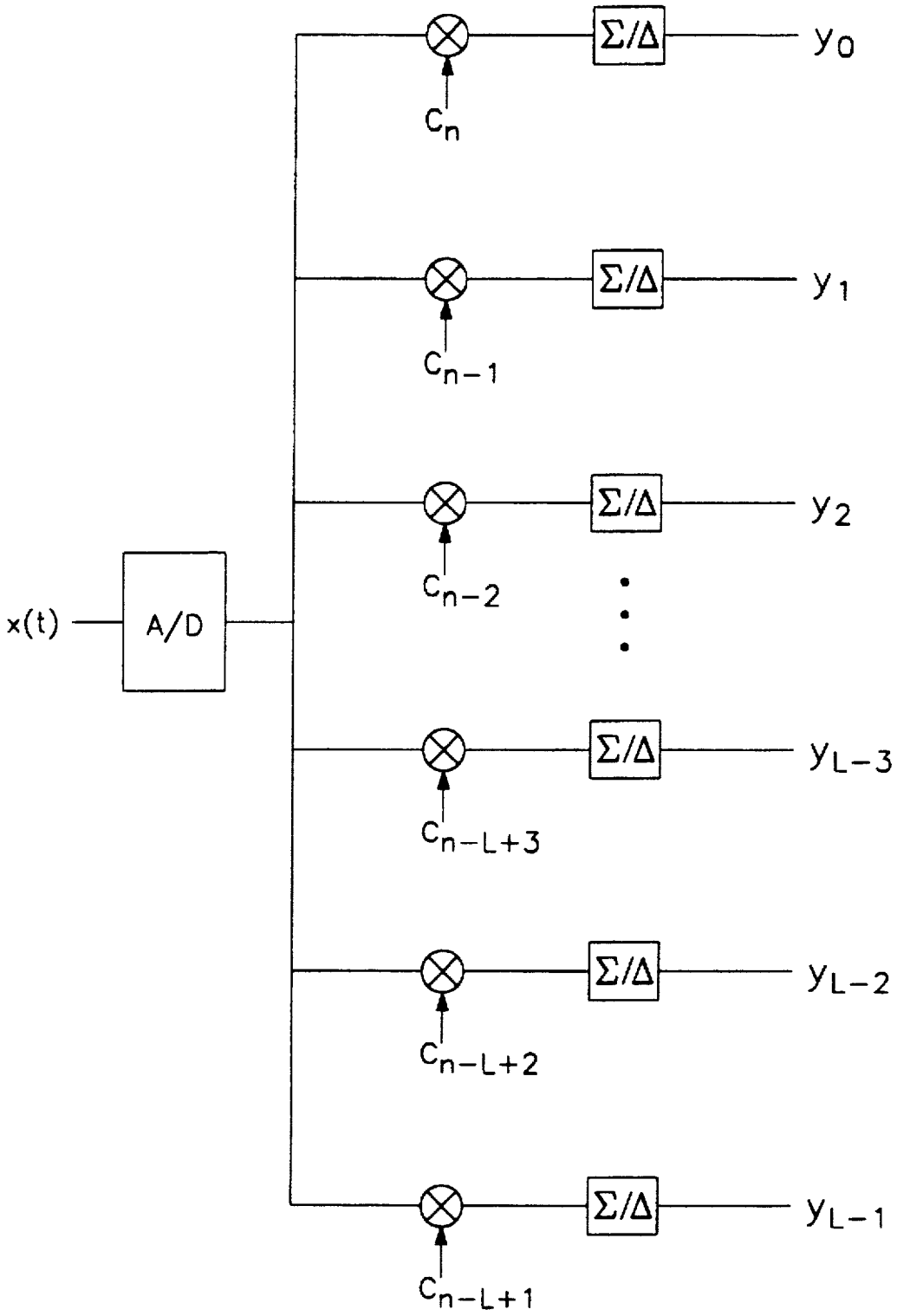
x(t)
A/D
Σ/Δ
Σ/Δ
Σ/Δ
Σ/Δ
Σ/Δ
Σ/Δ
y_0
y_1
y_2
y_{L-3}
y_{L-2}
y_{L-1}
c_n
c_{n-1}
c_{n-2}
c_{n-L+3}
c_{n-L+2}
c_{n-L+1}

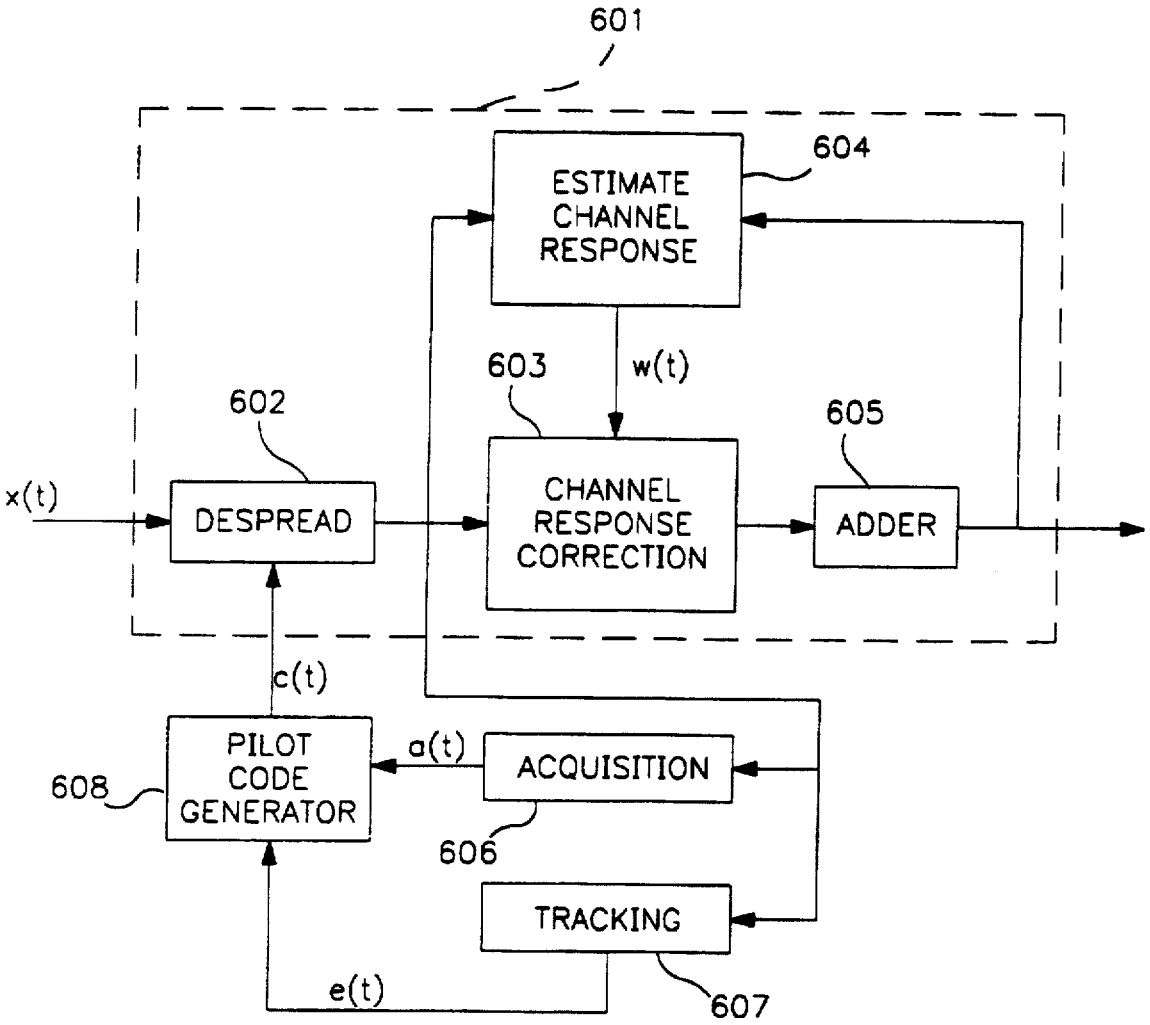
601
604
ESTIMATE CHANNEL RESPONSE
603
w(t)
602
605
x(t)
DESPREAD
CHANNEL RESPONSE CORRECTION
ADDER
c(t)
PILOT CODE GENERATOR
608
a(t)
ACQUISITION
606
TRACKING
e(t)
607

FIG. 6

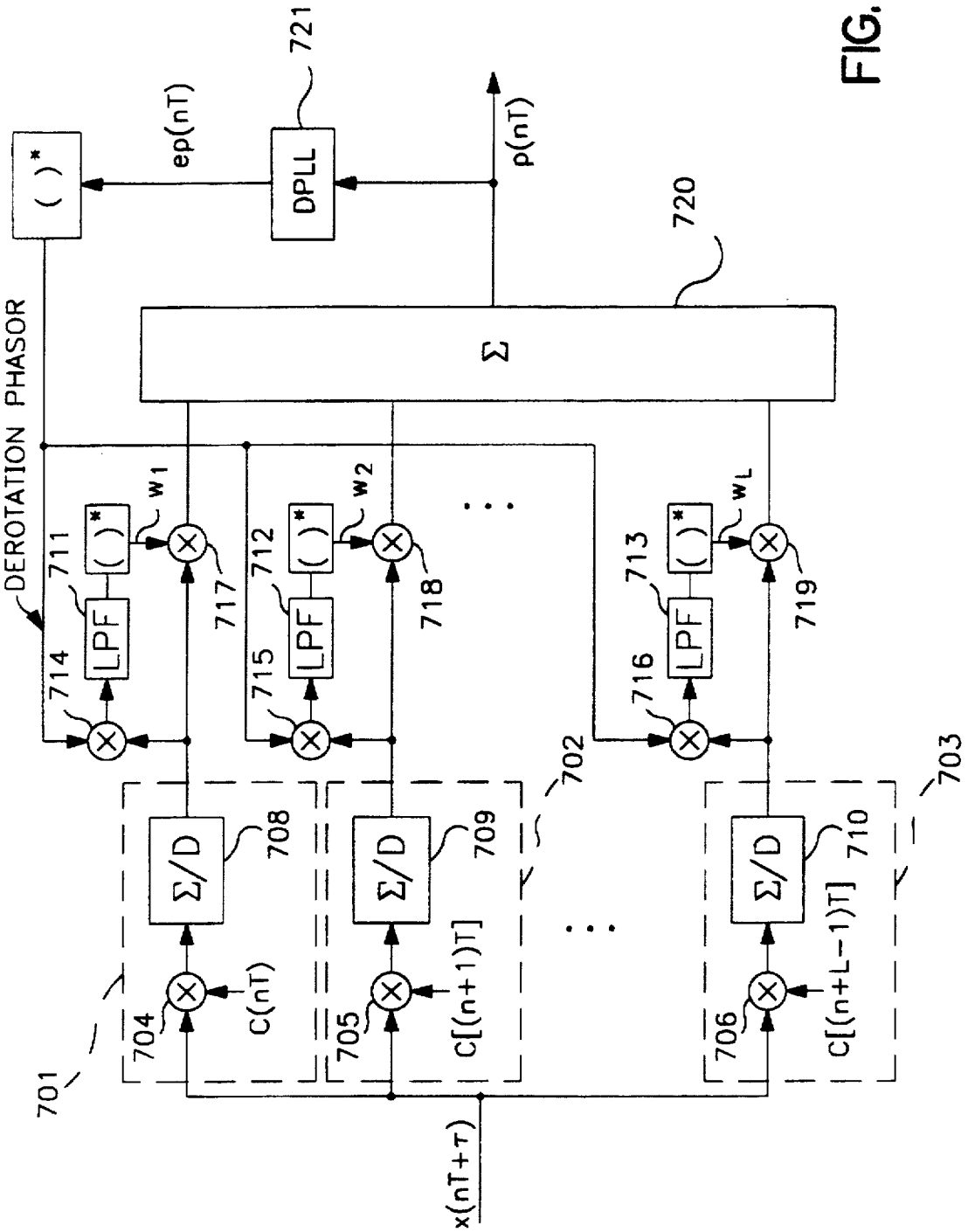
DEROTATION PHASOR
( )*
ep(nT)
DPLL
p(nT)
721
720
Σ
711
712
713
714
715
716
LPF
w1
w2
wL
717
718
719
Σ/D
708
709
710
702
703
701
704
705
706
C(nT)
C[(n+1)T]
C[(n+L-1)T]
x(nT+τ)

FIG. 7

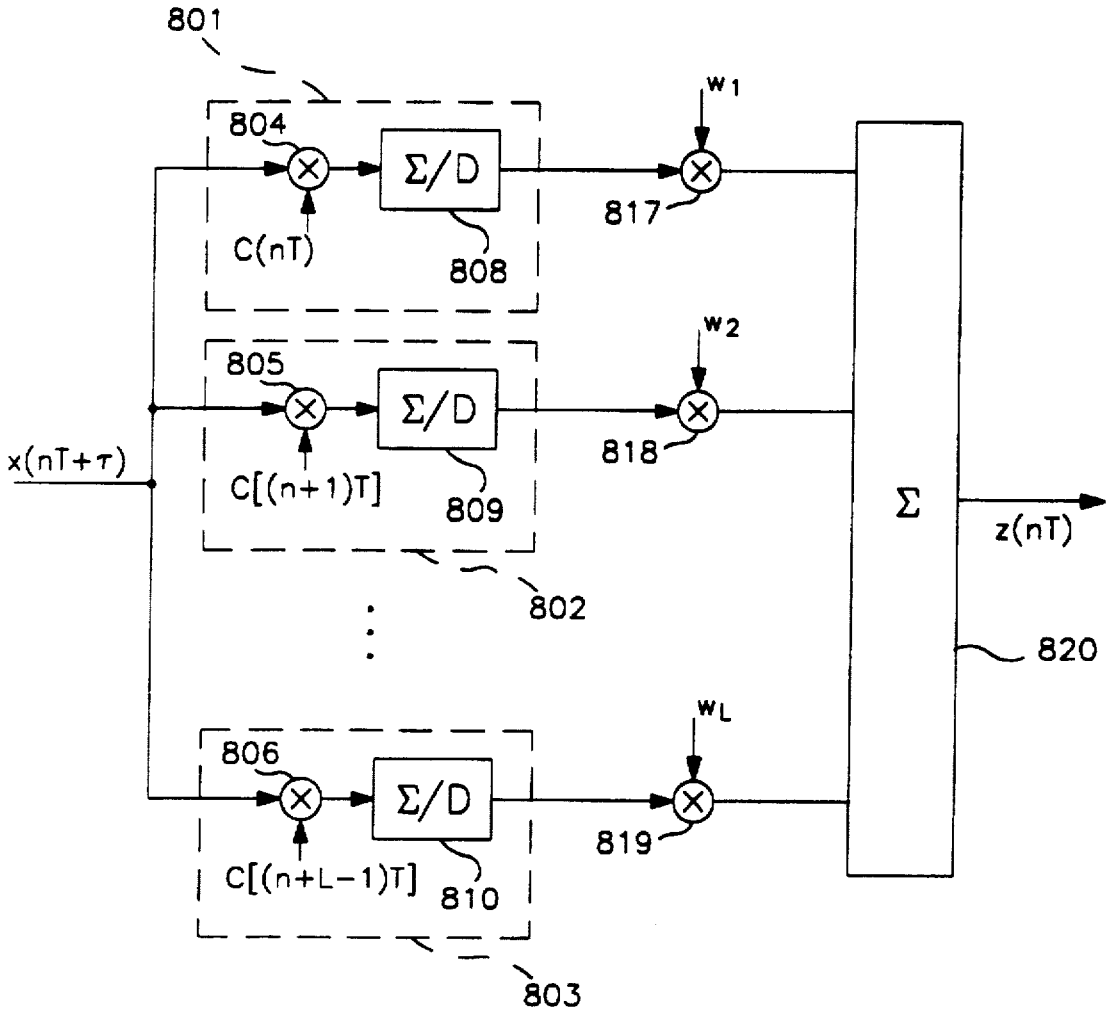
801
804
Σ/D
C(nT)
808
817
w1
805
Σ/D
C[(n+1)T]
809
818
w2
x(nT+τ)
802
Σ
z(nT)
820
806
Σ/D
C[(n+L−1)T]
810
819
wL
803

FIG. 8a

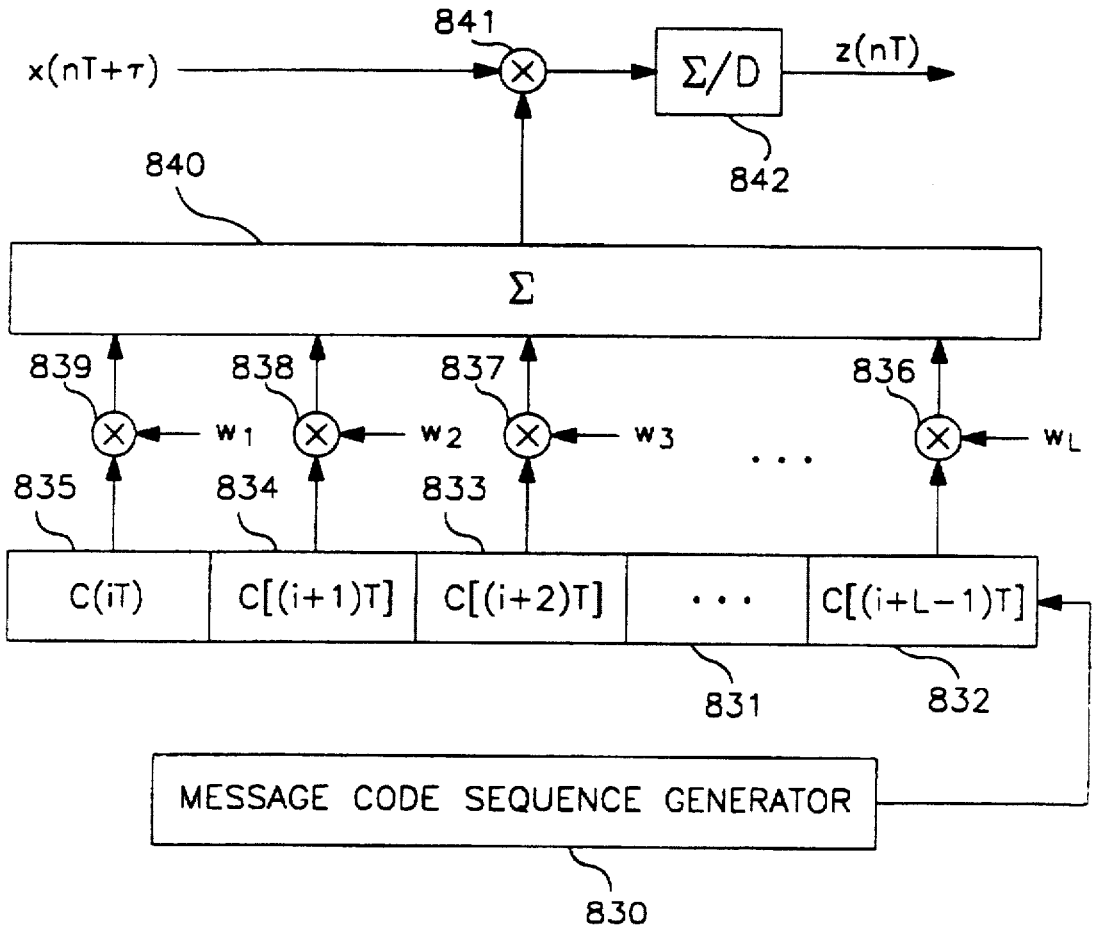
841
x(nT+τ)
Σ/D
z(nT)
842
840
Σ
839
838
837
836
w1
w2
w3
wL
835
834
833
C(iT)
C[(i+1)T]
C[(i+2)T]
C[(i+L−1)T]
831
832
MESSAGE CODE SEQUENCE GENERATOR
830

FIG. 8b

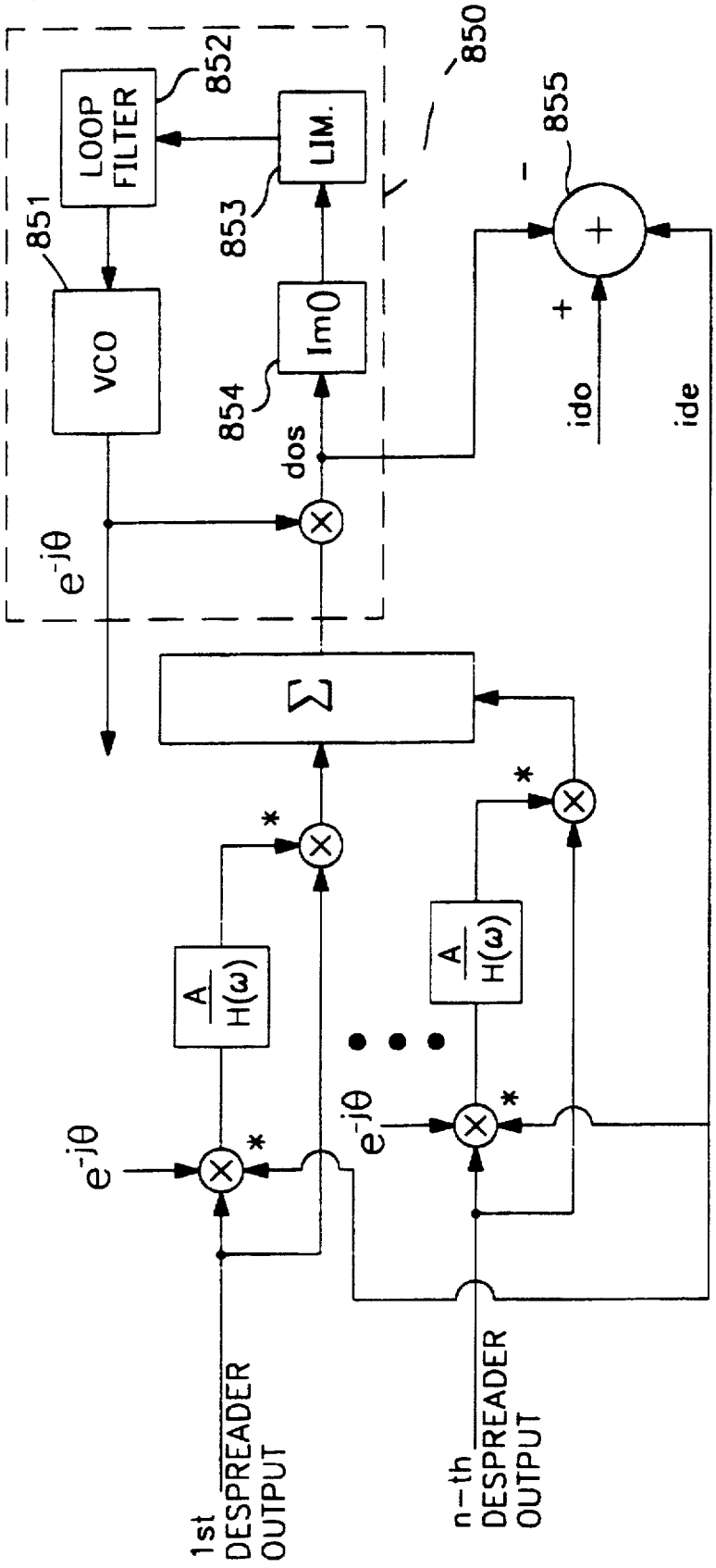
850
852
LOOP FILTER
LIM.
853
851
VCO
Im()
854
dos
855
-
+
ido
ide
$e^{-j\theta}$
Σ
*
$\frac{A}{H(\omega)}$
1st DESPREADER OUTPUT
n-th DESPREADER OUTPUT

FIG. 8c

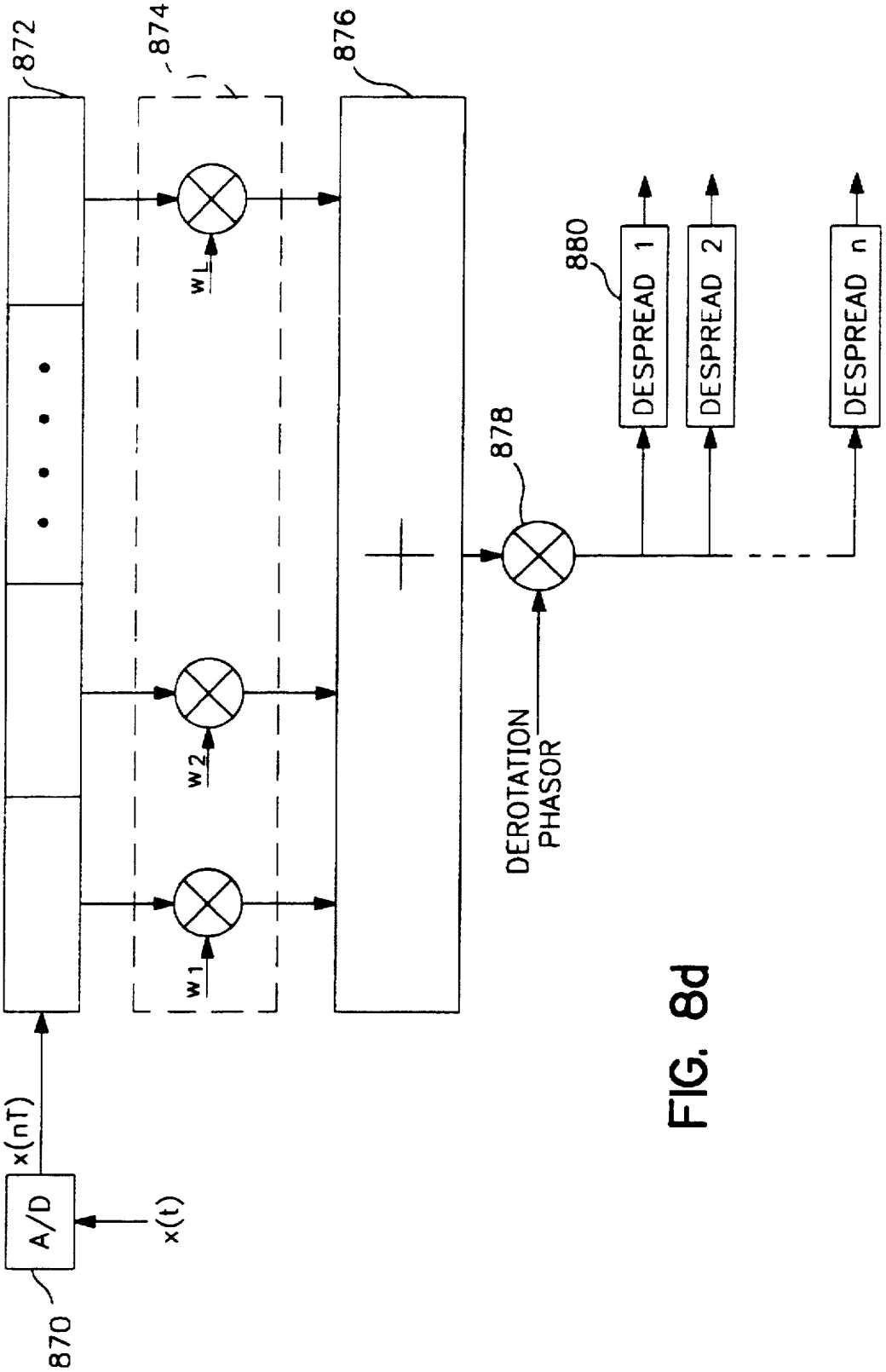
872
874
876
880
DESPREAD 1
DESPREAD 2
DESPREAD n
878
DEROTATION PHASOR
W L
W 2
W 1
x(nT)
A/D
x(t)
870

FIG. 8d

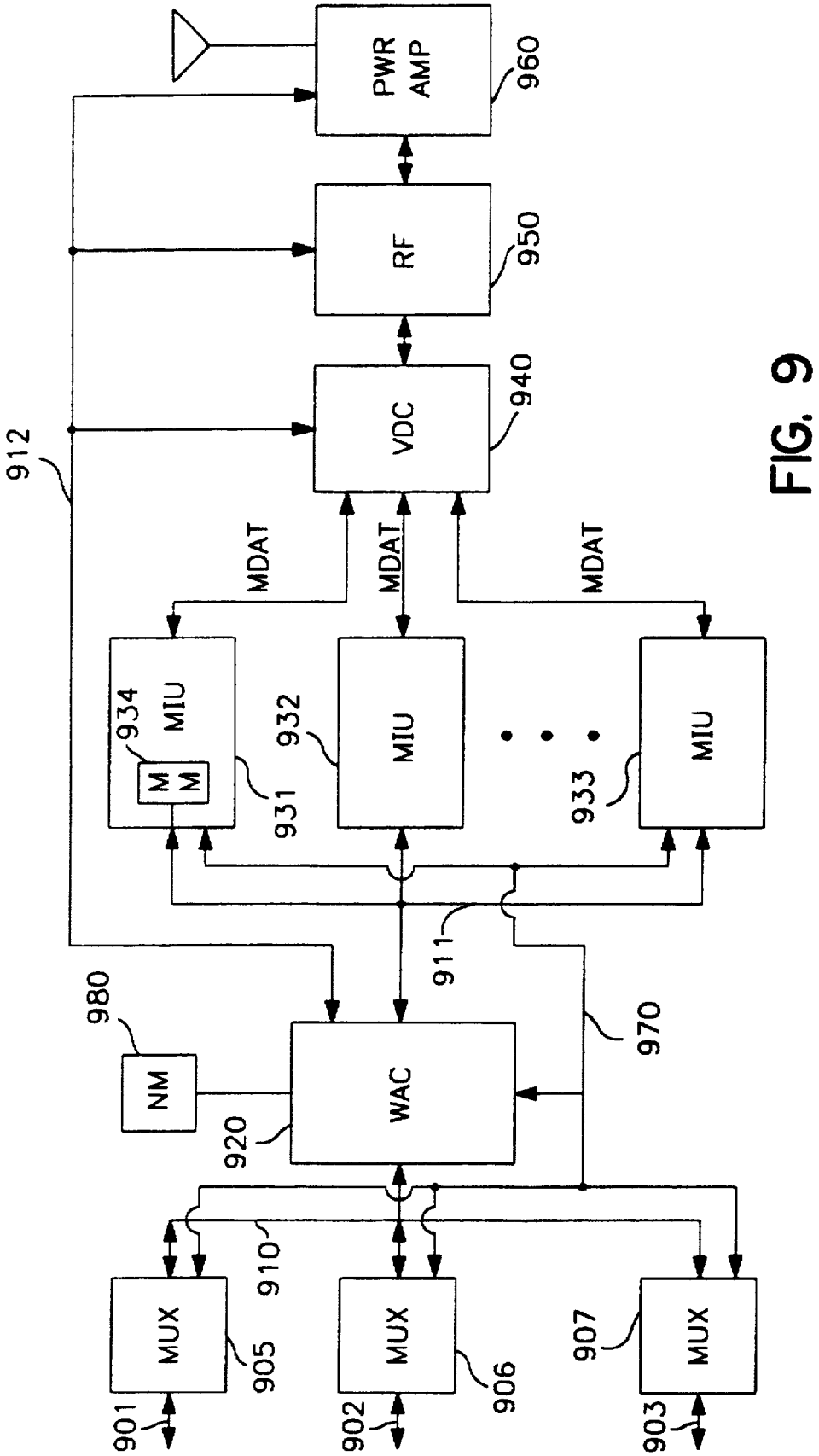
PWR AMP
960
RF
950
VDC
940
912
MDAT
MDAT
MDAT
MIU
934
M M
931
MIU
932
MIU
933
911
980
NM
WAC
920
970
MUX
905
MUX
906
MUX
907
910
901
902
903

FIG. 9

FIG. 10

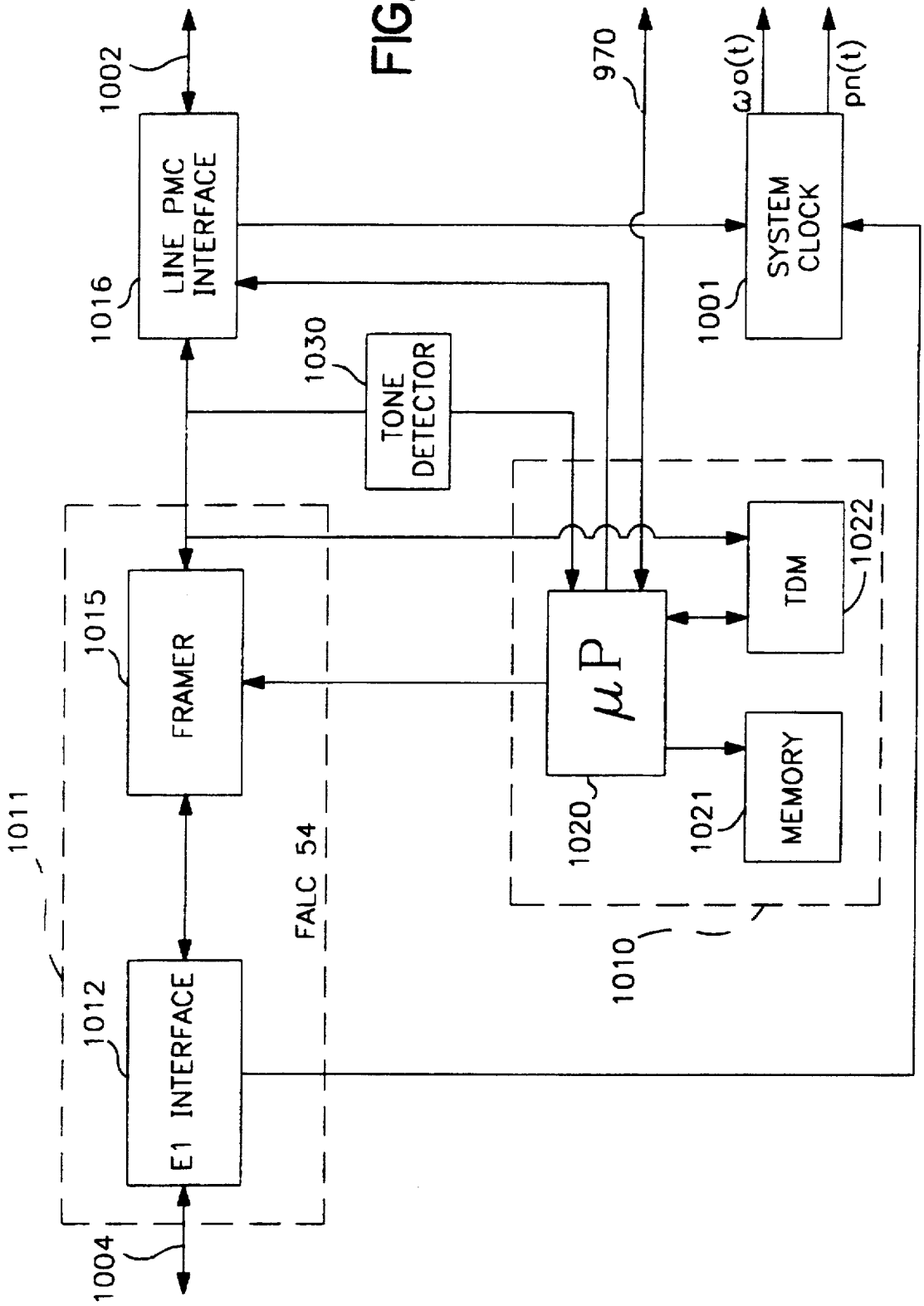
1002
LINE PMC INTERFACE
1016
1030
TONE DETECTOR
970
ωo(t)
pn(t)
SYSTEM CLOCK
1001
1022
TDM
1015
FRAMER
μP
1020
1021
MEMORY
1011
FALC 54
1010
1012
E1 INTERFACE
1004

FIG. 11

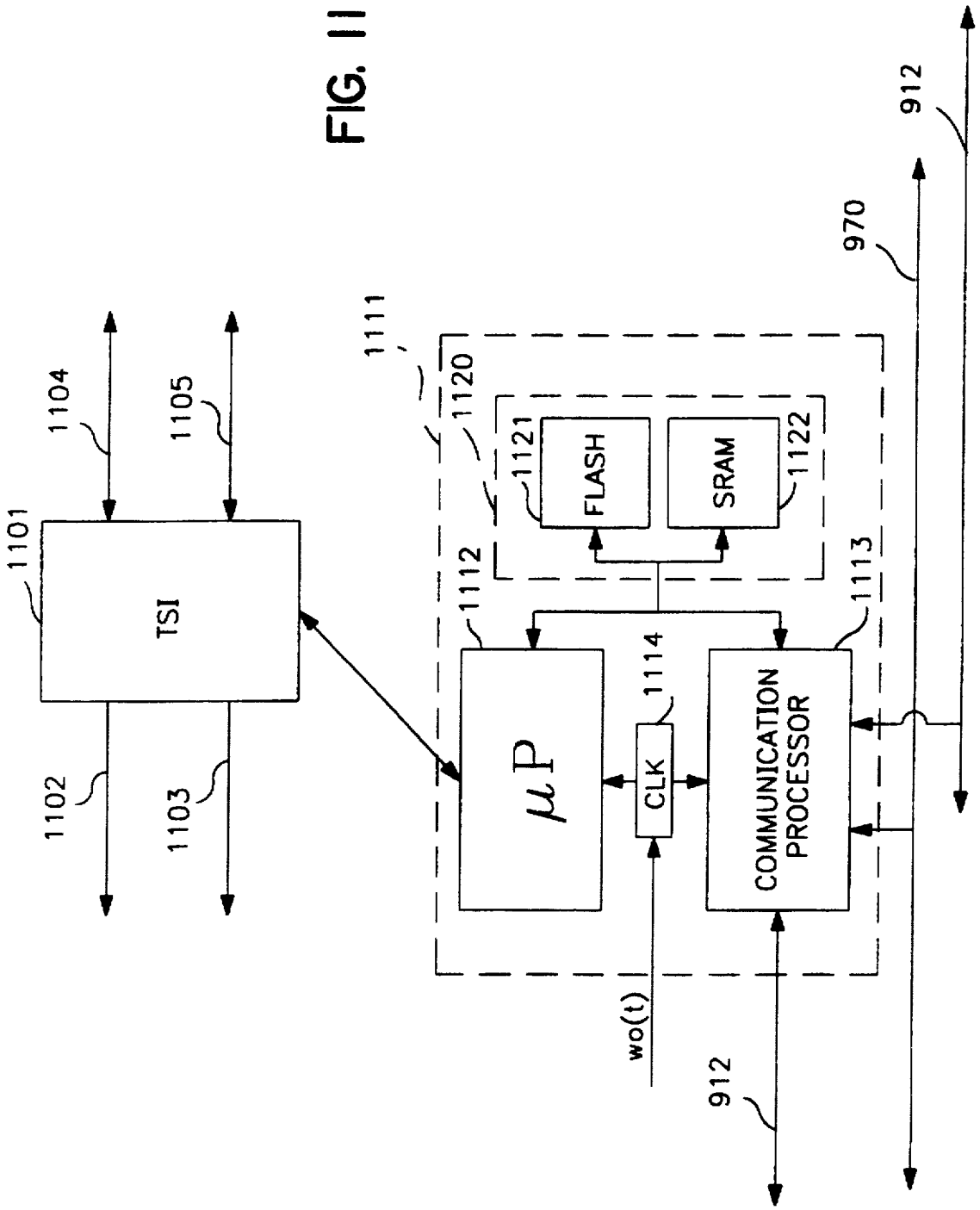
912
970
1111
1120
1104
1105
1121
FLASH
SRAM
1122
1101
TSI
1112
1113
1114
μP
CLK
COMMUNICATION PROCESSOR
1102
1103
wo(t)
912

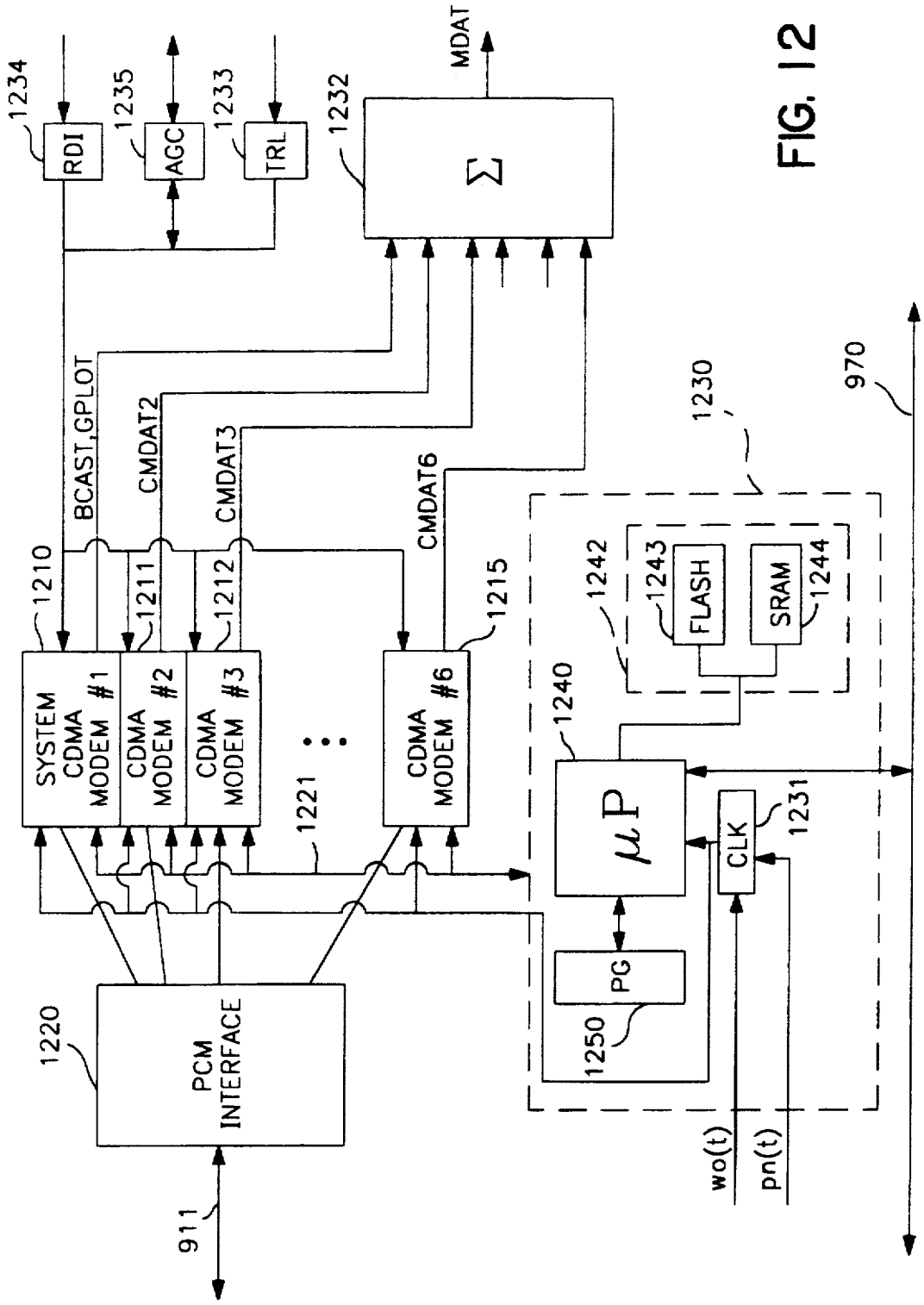
1234
RDI
1235
AGC
1233
TRL
1232
Σ
MDAT
BCAST,GPLOT
CMDAT2
CMDAT3
CMDAT6
1210
1211
1212
1215
SYSTEM CDMA MODEM #1
CDMA MODEM #2
CDMA MODEM #3
CDMA MODEM #6
1221
1230
970
1242
1243
FLASH
SRAM
1244
1240
μP
CLK
1231
PG
1250
1220
PCM INTERFACE
911
wo(t)
pn(t)

FIG. 12

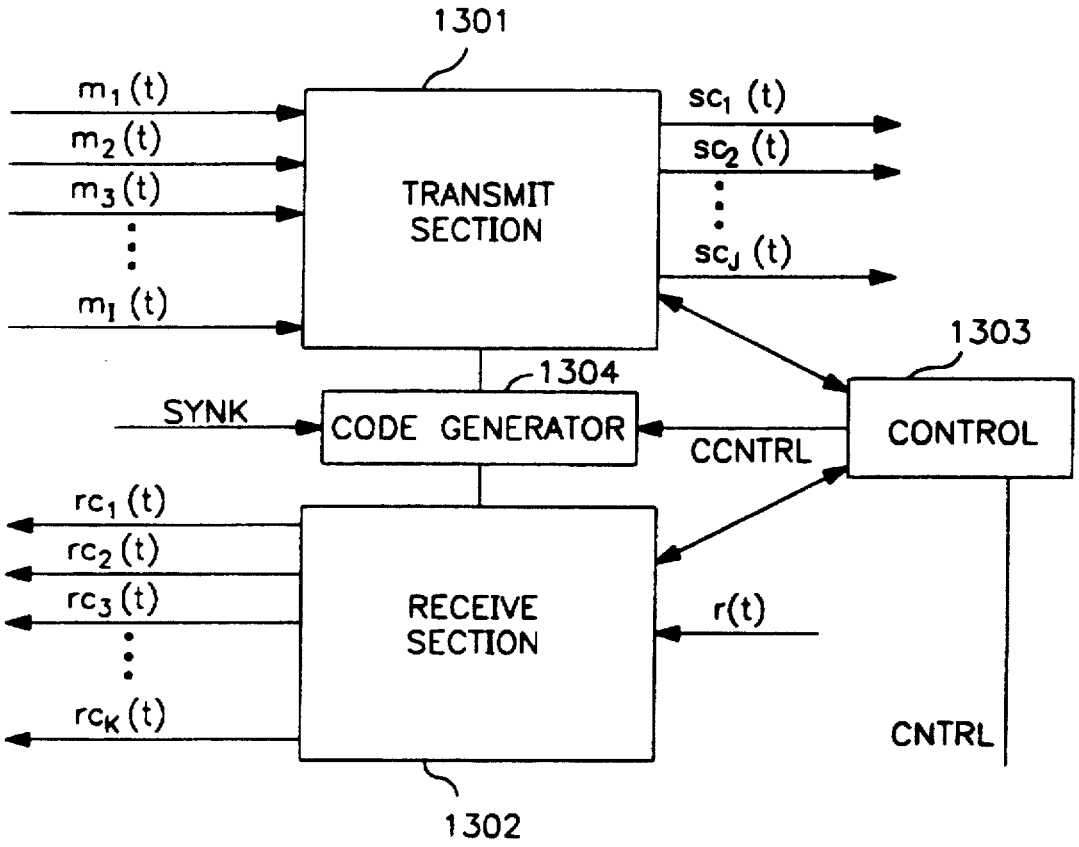
1301
$m_1(t)$
$m_2(t)$
$m_3(t)$
$m_I(t)$
TRANSMIT SECTION
$sc_1(t)$
$sc_2(t)$
$sc_J(t)$
1303
1304
SYNK
CODE GENERATOR
CCNTRL
CONTROL
$rc_1(t)$
$rc_2(t)$
$rc_3(t)$
$rc_K(t)$
RECEIVE SECTION
r(t)
CNTRL
1302

FIG. 13

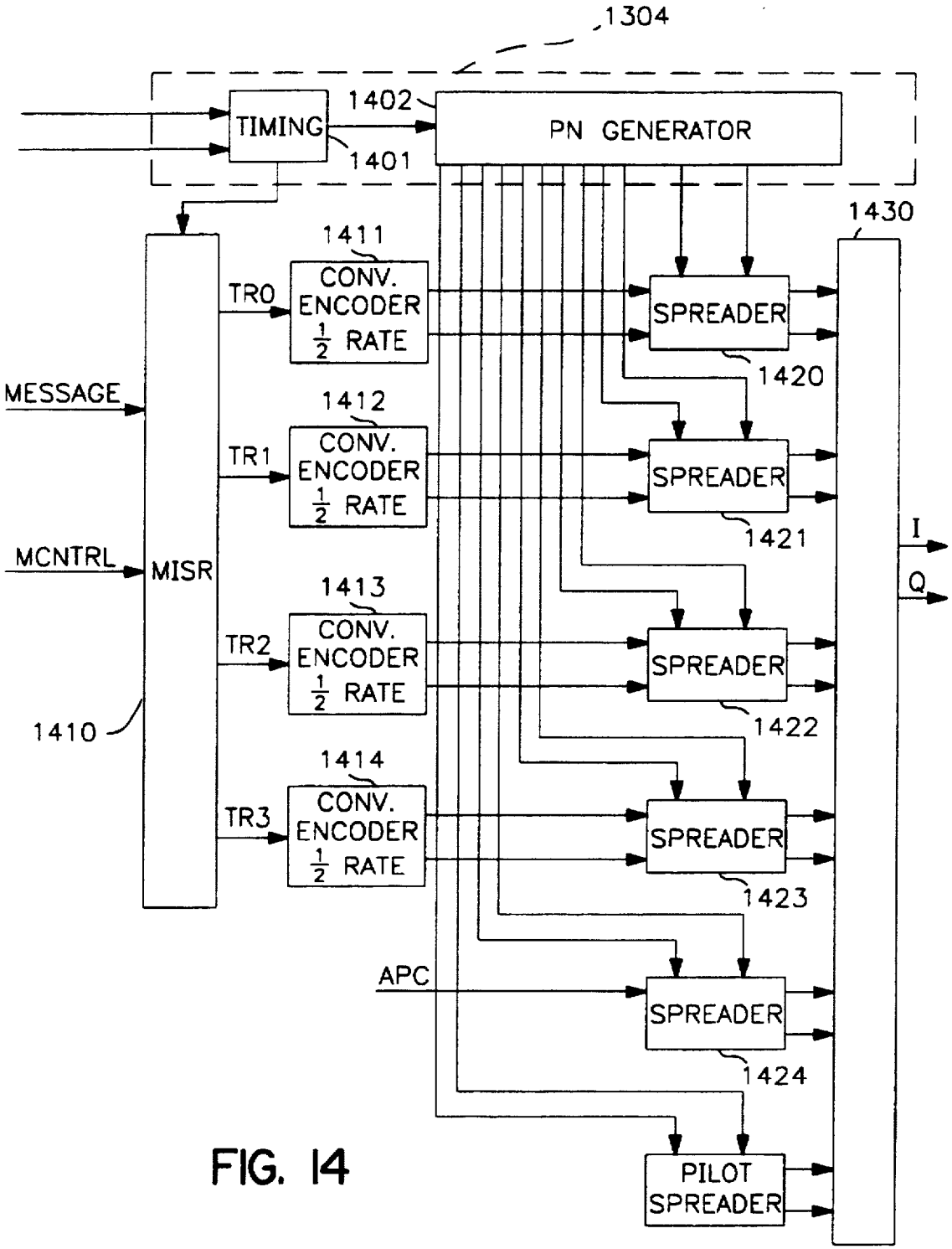
1304
TIMING
1402
1401
PN GENERATOR
1430
1411
CONV. ENCODER ½ RATE
TR0
SPREADER
1420
MESSAGE
1412
CONV. ENCODER ½ RATE
TR1
SPREADER
1421
I
MCNTRL
MISR
Q
1413
CONV. ENCODER ½ RATE
TR2
SPREADER
1422
1410
1414
CONV. ENCODER ½ RATE
TR3
SPREADER
1423
APC
SPREADER
1424
PILOT SPREADER

FIG. 14

FIG. 15

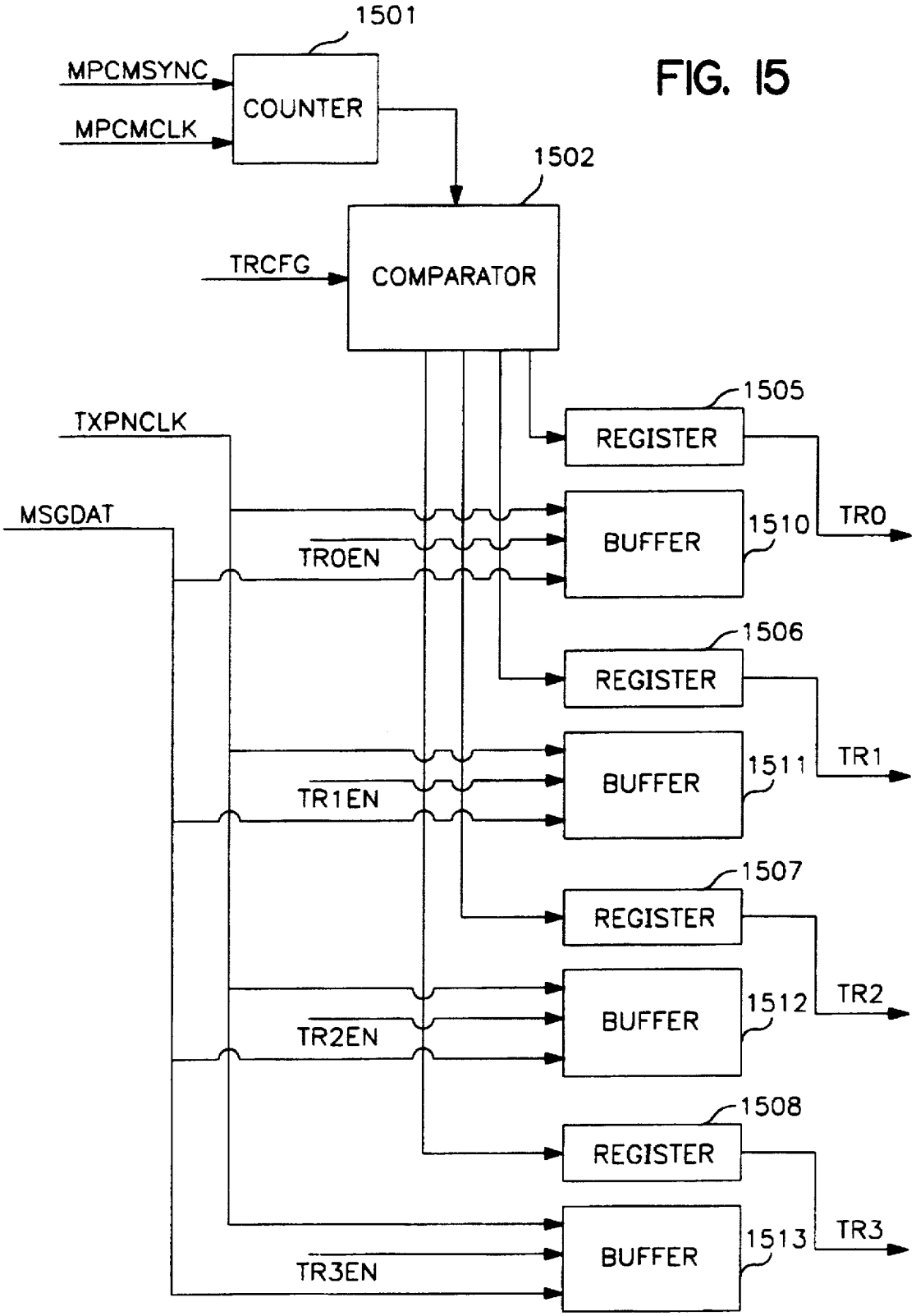
1501
MPCMSYNC
MPCMCLK
COUNTER
1502
TRCFG
COMPARATOR
TXPNCLK
MSGDAT
1505
REGISTER
BUFFER
1510
TR0
TR0EN
1506
REGISTER
BUFFER
1511
TR1
TR1EN
1507
REGISTER
BUFFER
1512
TR2
TR2EN
1508
REGISTER
BUFFER
1513
TR3
TR3EN

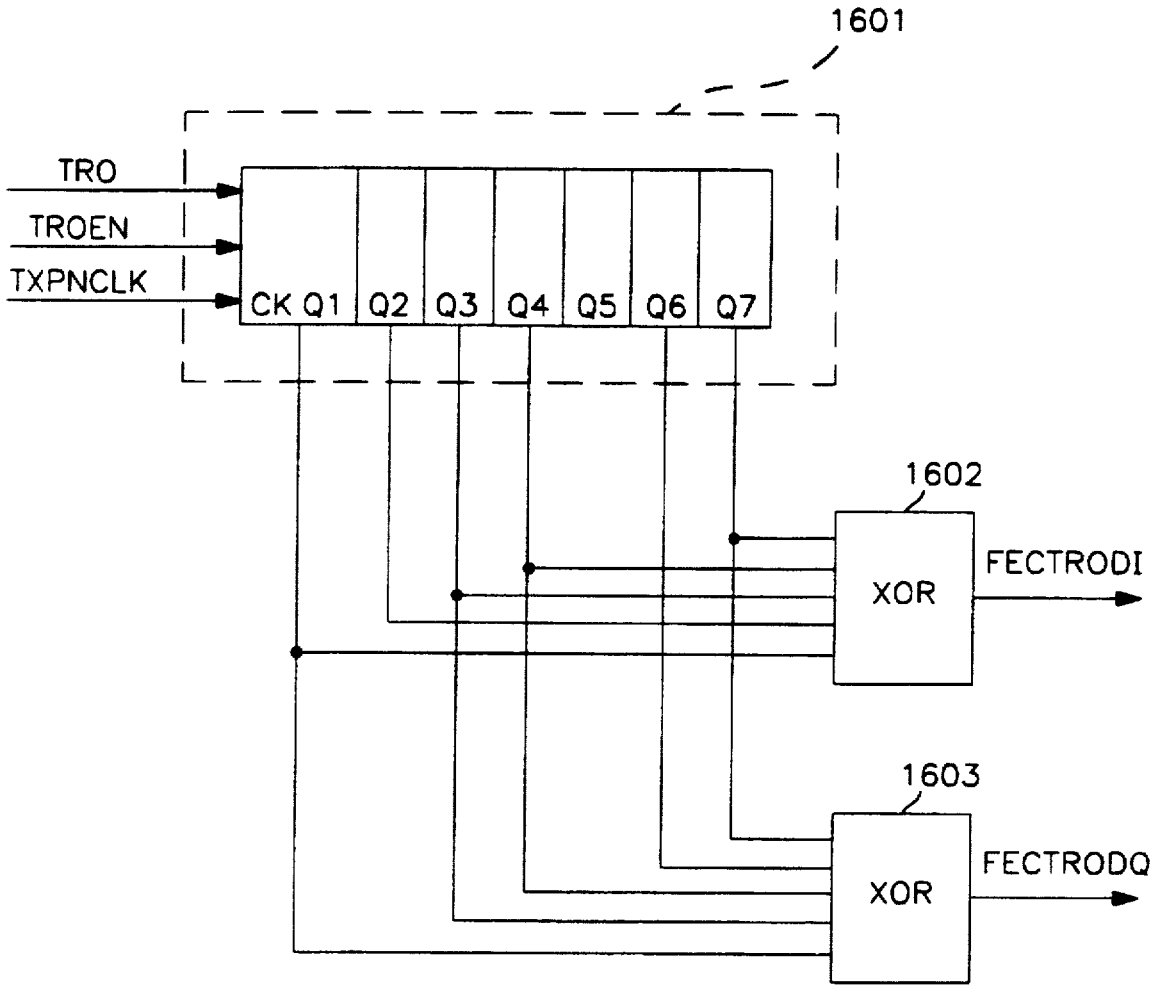
1601
TRO
TROEN
TXPNCLK
CK Q1
Q2
Q3
Q4
Q5
Q6
Q7
1602
XOR
FECTRODI
1603
XOR
FECTRODQ

FIG. 16

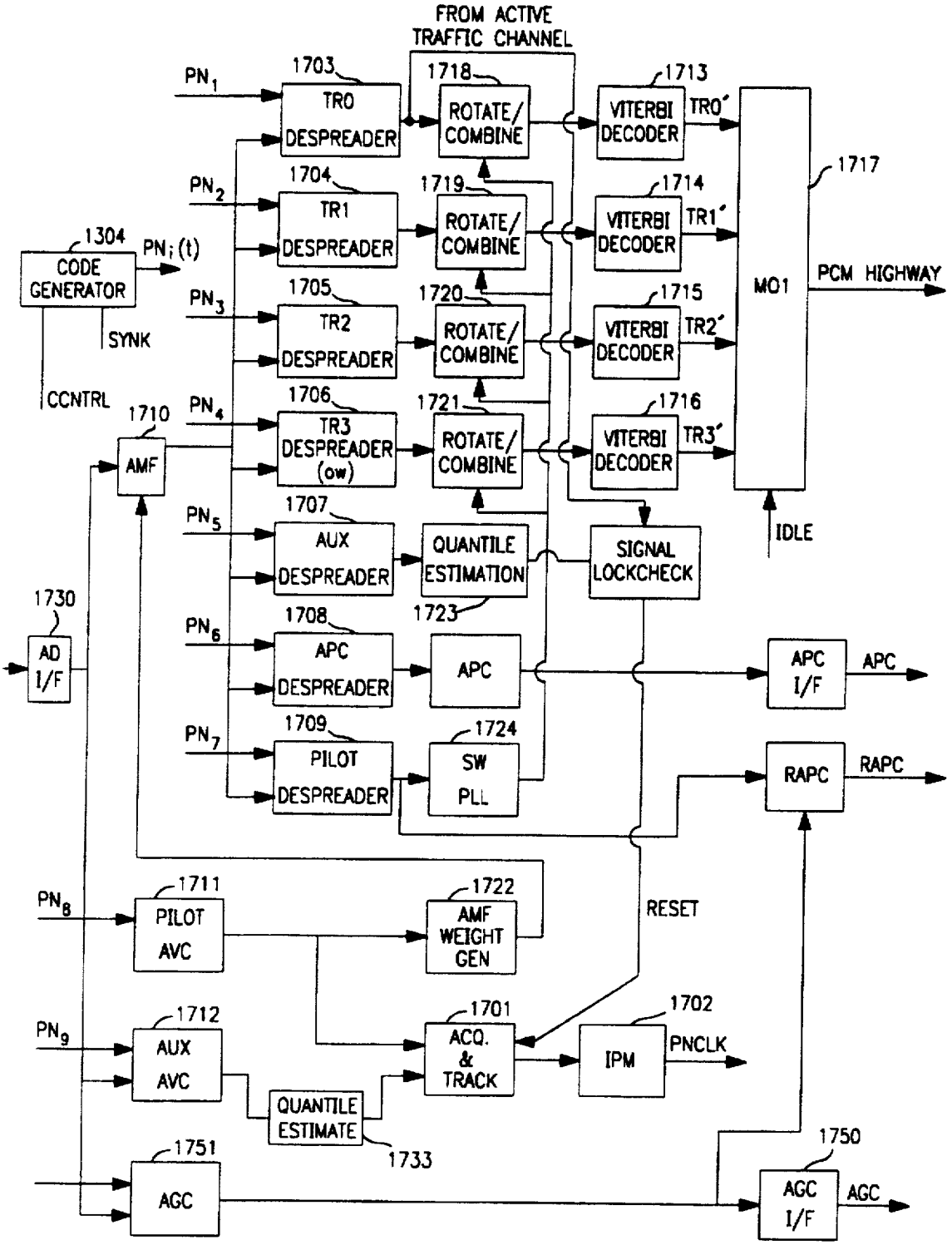
FROM ACTIVE TRAFFIC CHANNEL
PN1
1703
TR0 DESPREADER
1718
ROTATE/ COMBINE
1713
VITERBI DECODER
TR0'
PN2
1704
TR1 DESPREADER
1719
ROTATE/ COMBINE
1714
VITERBI DECODER
TR1'
1717
1304
CODE GENERATOR
PNi(t)
SYNK
CCNTRL
PN3
1705
TR2 DESPREADER
1720
ROTATE/ COMBINE
1715
VITERBI DECODER
TR2'
MO1
PCM HIGHWAY
PN4
1706
TR3 DESPREADER (ow)
1721
ROTATE/ COMBINE
1716
VITERBI DECODER
TR3'
1710
AMF
IDLE
PN5
1707
AUX DESPREADER
QUANTILE ESTIMATION
SIGNAL LOCKCHECK
1730
AD I/F
1723
PN6
1708
APC DESPREADER
APC
APC I/F
APC
PN7
1709
PILOT DESPREADER
1724
SW PLL
RAPC
RAPC
PN8
1711
PILOT AVC
1722
AMF WEIGHT GEN
RESET
PN9
1712
AUX AVC
1701
ACQ. & TRACK
1702
IPM
PNCLK
QUANTILE ESTIMATE
1733
1751
AGC
1750
AGC I/F
AGC

FIG. 17

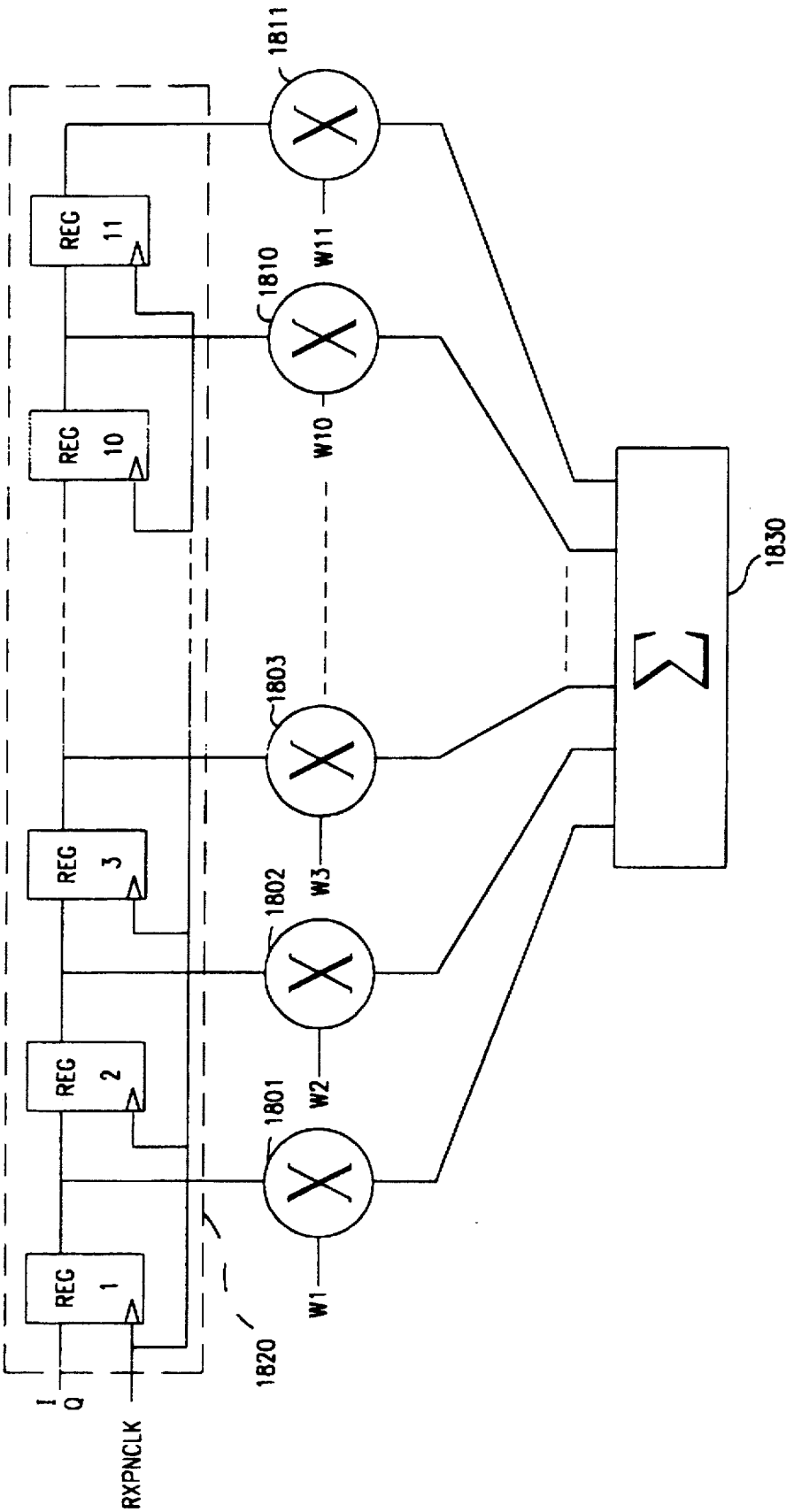
1811
1810
1803
1802
1801
REG 11
REG 10
REG 3
REG 2
REG 1
W11
W10
W3
W2
W1
1830
1820
I
Q
RXPNCLK

FIG. 18

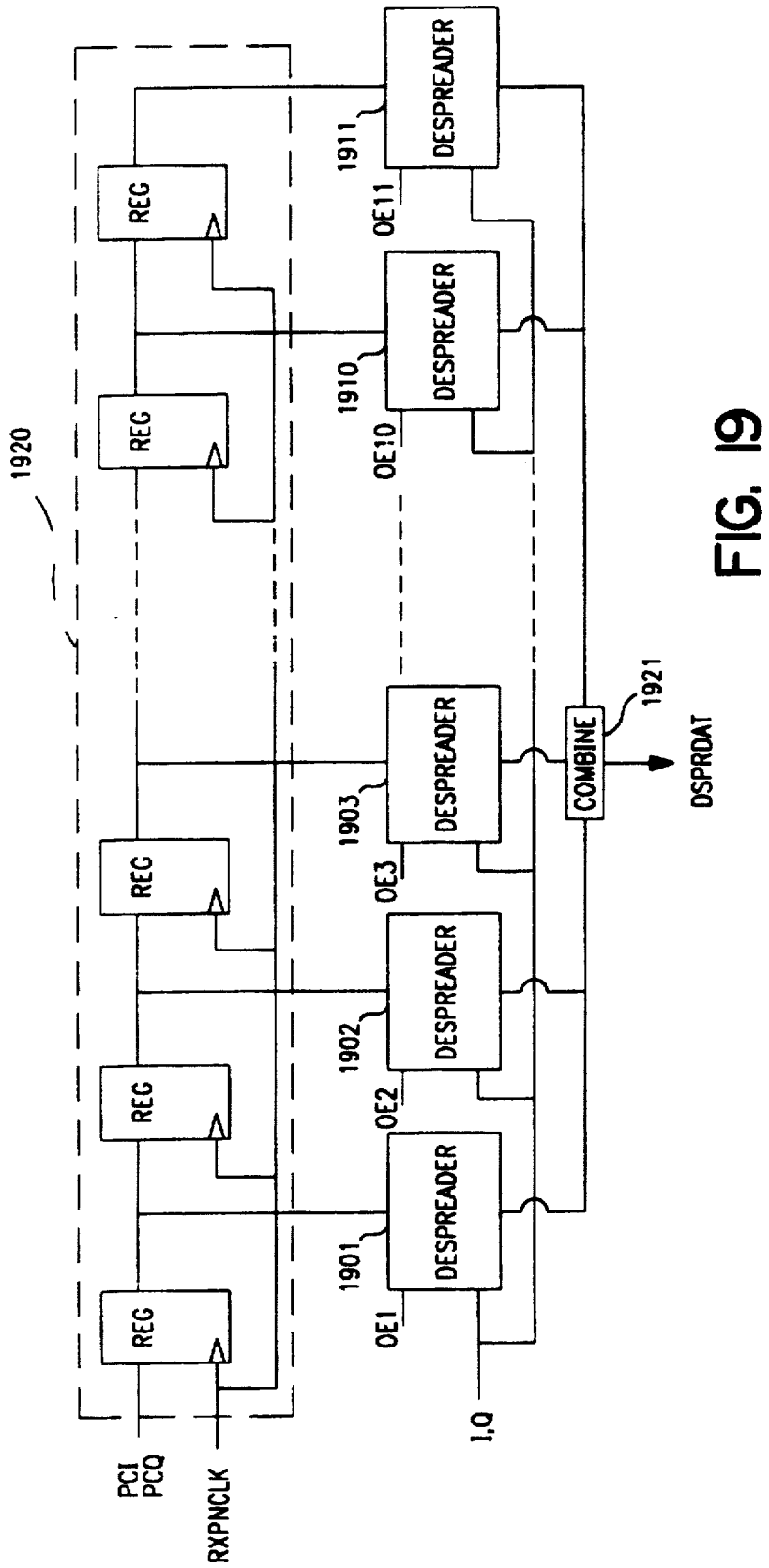
1920
REG
REG
REG
REG
REG
PCI
PCQ
RXPNCLK
1911
DESPREADER
OE11
1910
DESPREADER
OE10
1903
DESPREADER
OE3
1902
DESPREADER
OE2
1901
DESPREADER
OE1
I,Q
COMBINE
1921
DSPRDAT

FIG. 19

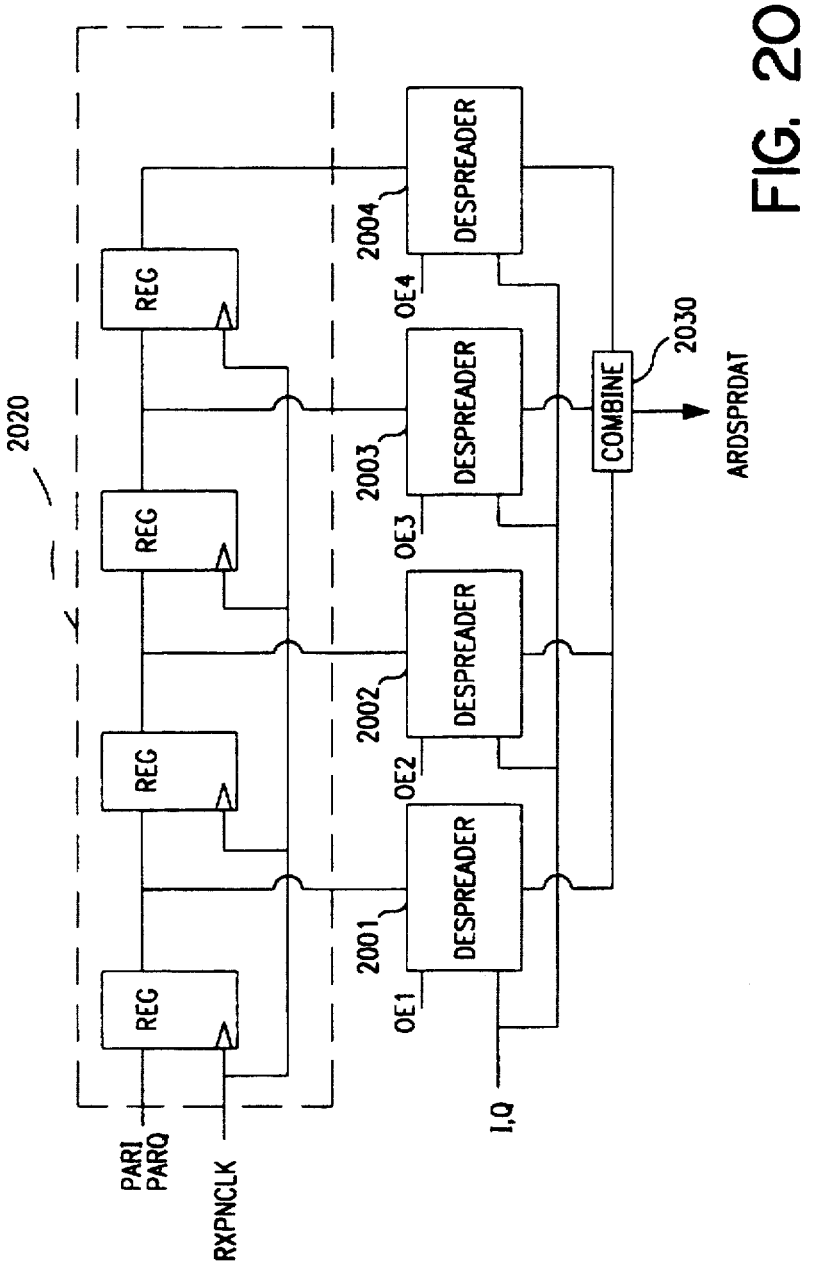
2020
REG
REG
REG
REG
PARI
PARQ
RXPNCLK
2004
2003
2002
2001
OE4
OE3
OE2
OE1
DESPREADER
DESPREADER
DESPREADER
DESPREADER
I,Q
COMBINE
2030
ARDSPRDAT

FIG. 20

FIG. 21

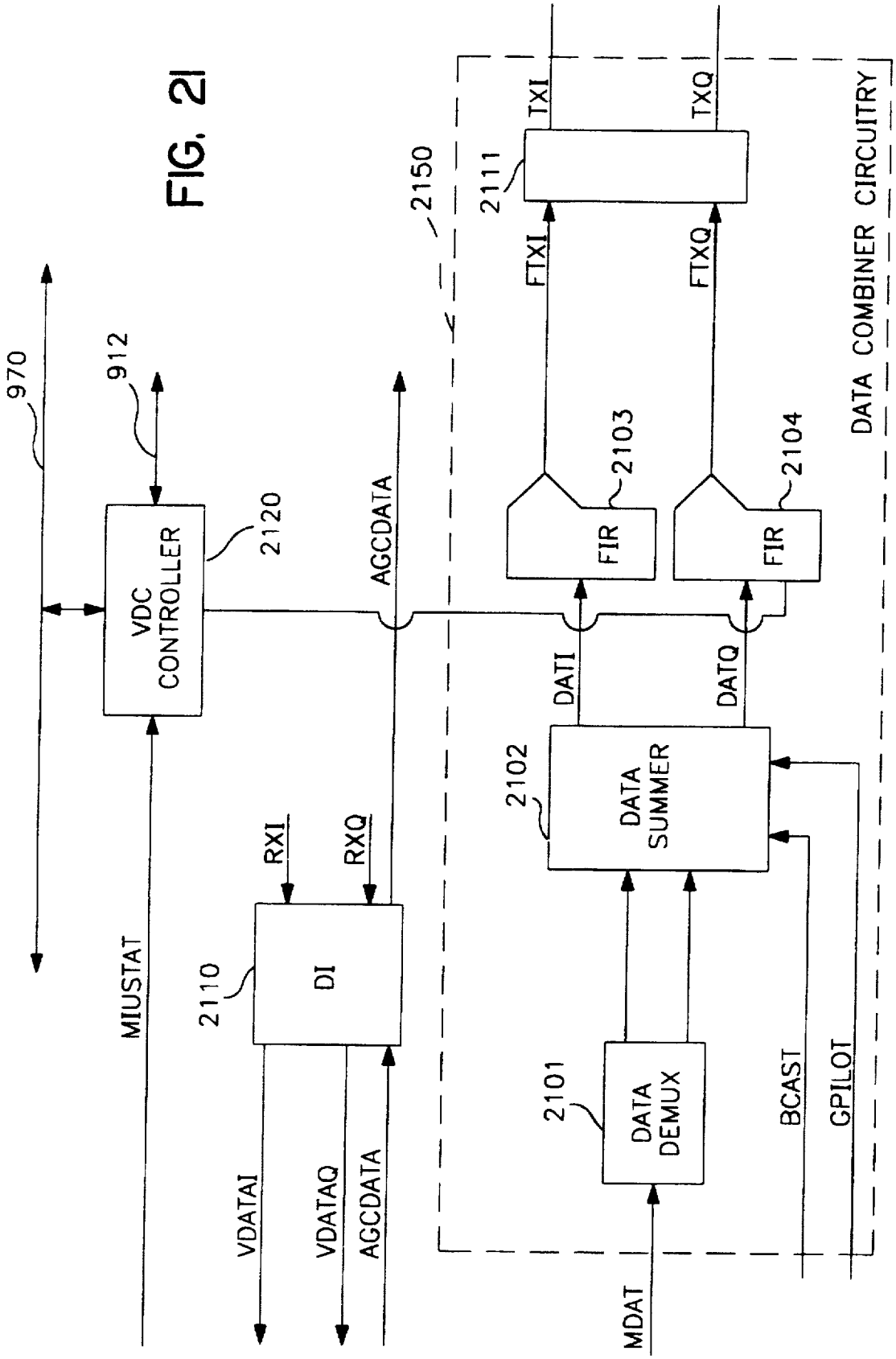
970
912
VDC CONTROLLER
2120
AGCDATA
2150
DATA COMBINER CIRCUITRY
2111
TXI
TXQ
FTXI
FTXQ
2103
2104
FIR
FIR
DATI
DATQ
2102
DATA SUMMER
RXI
RXQ
MIUSTAT
2110
DI
2101
DATA DEMUX
BCAST
GPILOT
VDATAI
VDATAQ
AGCDATA
MDAT

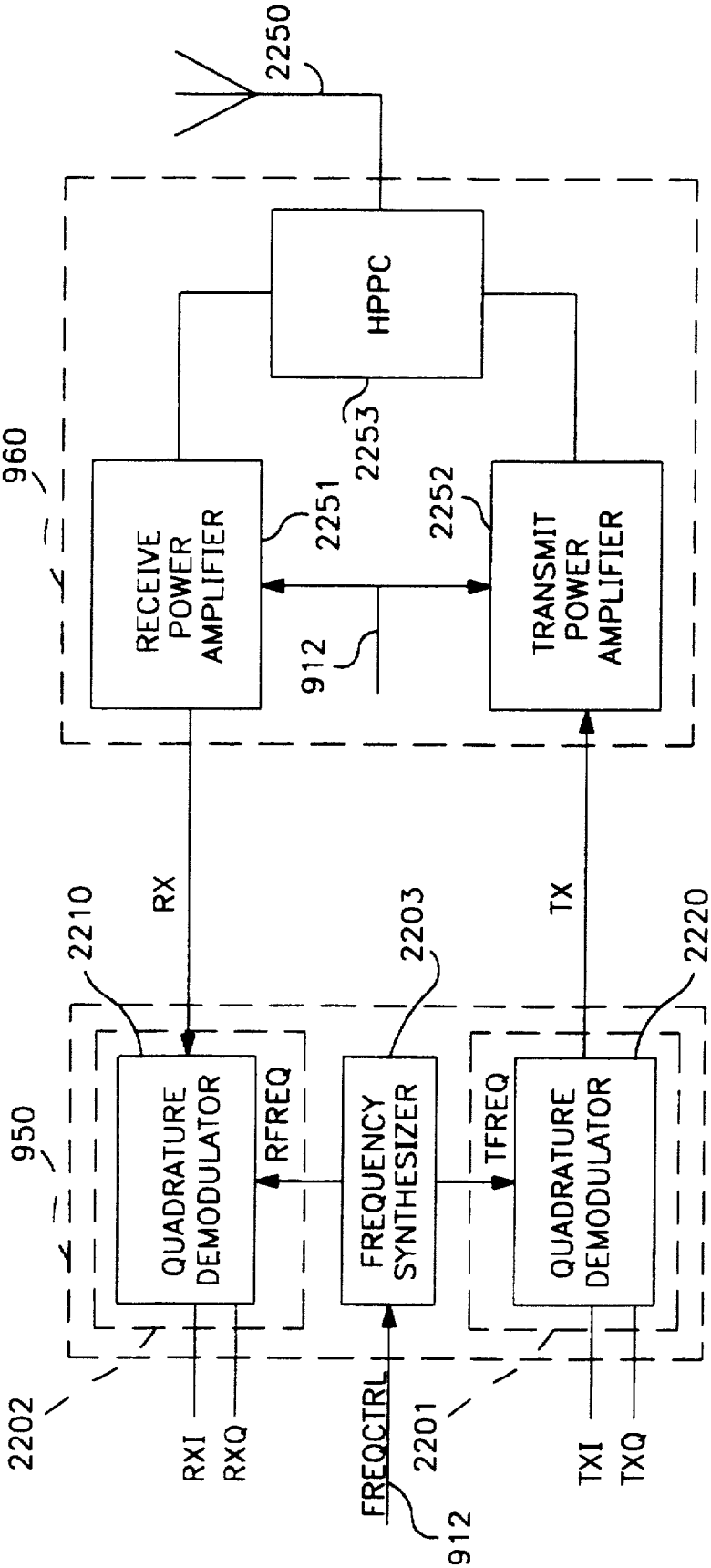
2250
HPPC
960
2253
2251
2252
RECEIVE POWER AMPLIFIER
TRANSMIT POWER AMPLIFIER
912
RX
TX
2210
2203
2220
950
QUADRATURE DEMODULATOR
RFREQ
FREQUENCY SYNTHESIZER
TFREQ
QUADRATURE DEMODULATOR
2202
2201
RXI
RXQ
FREQCTRL
912
TXI
TXQ

FIG. 22

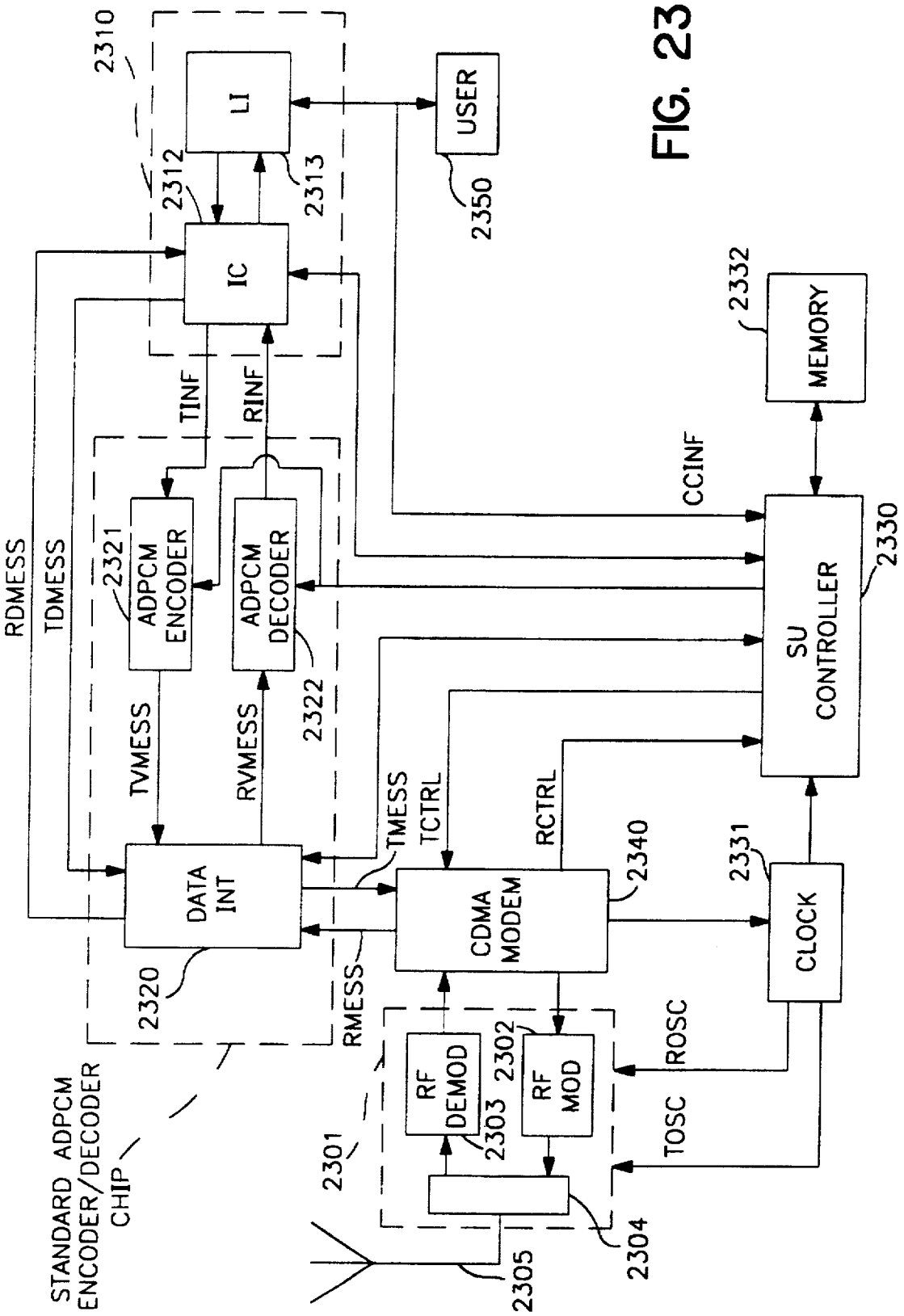
2310
LI
USER
2312
2313
2350
IC
2332
MEMORY
TINF
RINF
CCINF
RDMESS
TDMESS
2321
ADPCM ENCODER
ADPCM DECODER
2330
SU CONTROLLER
TVMESS
RVMESS
2322
TMESS
TCTRL
RCTRL
2340
2331
DATA INT
CDMA MODEM
CLOCK
2320
RMESS
RF DEMOD
2303
2302
RF MOD
ROSC
TOSC
2301
2304
2305
STANDARD ADPCM ENCODER/DECODER CHIP

FIG. 23

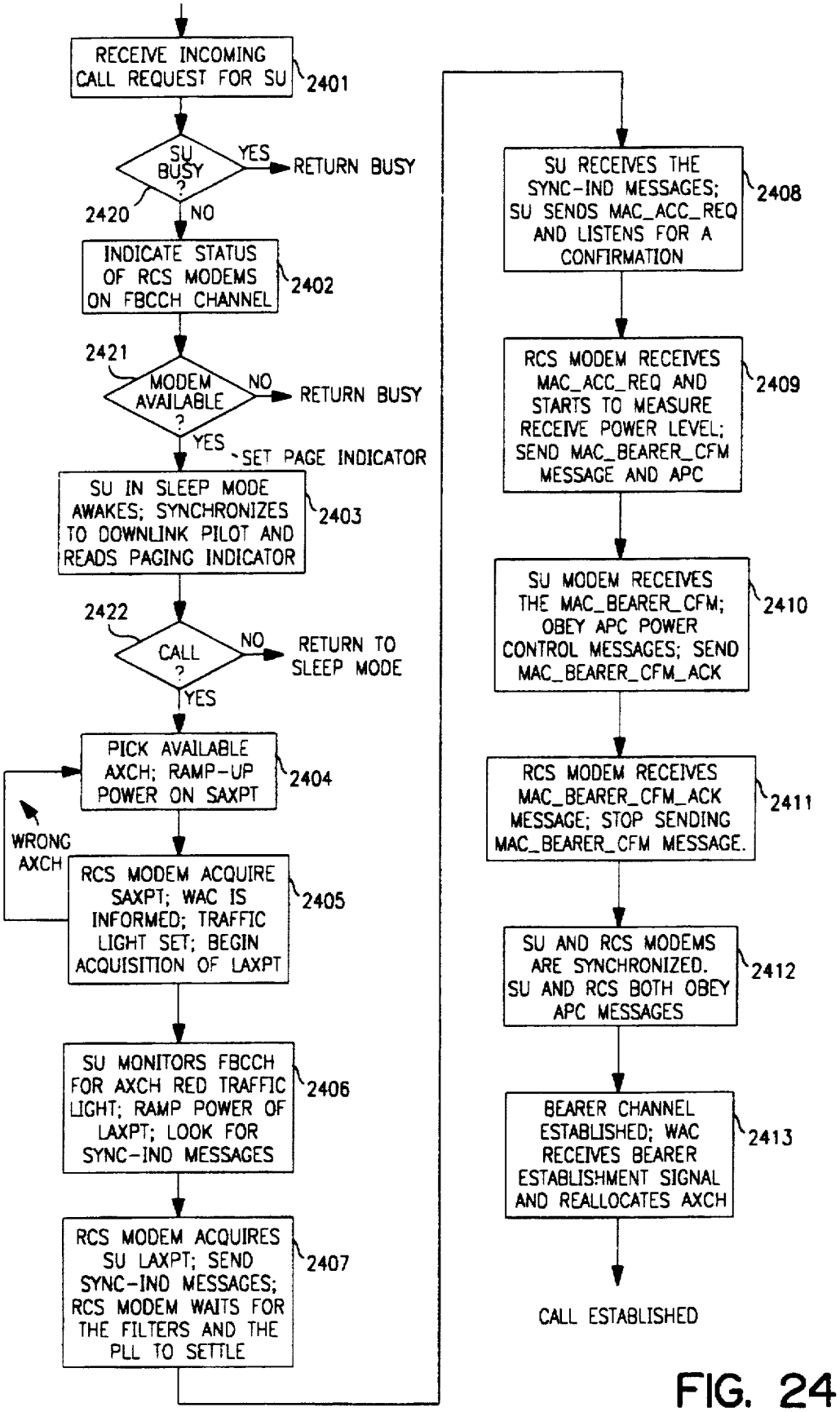
RECEIVE INCOMING CALL REQUEST FOR SU
2401
SU BUSY ?
YES
RETURN BUSY
2420
NO
INDICATE STATUS OF RCS MODEMS ON FBCCH CHANNEL
2402
2421
MODEM AVAILABLE ?
NO
RETURN BUSY
YES
SET PAGE INDICATOR
SU IN SLEEP MODE AWAKES; SYNCHRONIZES TO DOWNLINK PILOT AND READS PAGING INDICATOR
2403
2422
CALL ?
NO
RETURN TO SLEEP MODE
YES
PICK AVAILABLE AXCH; RAMP-UP POWER ON SAXPT
2404
WRONG AXCH
RCS MODEM ACQUIRE SAXPT; WAC IS INFORMED; TRAFFIC LIGHT SET; BEGIN ACQUISITION OF LAXPT
2405
SU MONITORS FBCCH FOR AXCH RED TRAFFIC LIGHT; RAMP POWER OF LAXPT; LOOK FOR SYNC-IND MESSAGES
2406
RCS MODEM ACQUIRES SU LAXPT; SEND SYNC-IND MESSAGES; RCS MODEM WAITS FOR THE FILTERS AND THE PLL TO SETTLE
2407
SU RECEIVES THE SYNC-IND MESSAGES; SU SENDS MAC_ACC_REQ AND LISTENS FOR A CONFIRMATION
2408
RCS MODEM RECEIVES MAC_ACC_REQ AND STARTS TO MEASURE RECEIVE POWER LEVEL; SEND MAC_BEARER_CFM MESSAGE AND APC
2409
SU MODEM RECEIVES THE MAC_BEARER_CFM; OBEY APC POWER CONTROL MESSAGES; SEND MAC_BEARER_CFM_ACK
2410
RCS MODEM RECEIVES MAC_BEARER_CFM_ACK MESSAGE; STOP SENDING MAC_BEARER_CFM MESSAGE.
2411
SU AND RCS MODEMS ARE SYNCHRONIZED. SU AND RCS BOTH OBEY APC MESSAGES
2412
BEARER CHANNEL ESTABLISHED; WAC RECEIVES BEARER ESTABLISHMENT SIGNAL AND REALLOCATES AXCH
2413
CALL ESTABLISHED

FIG. 24

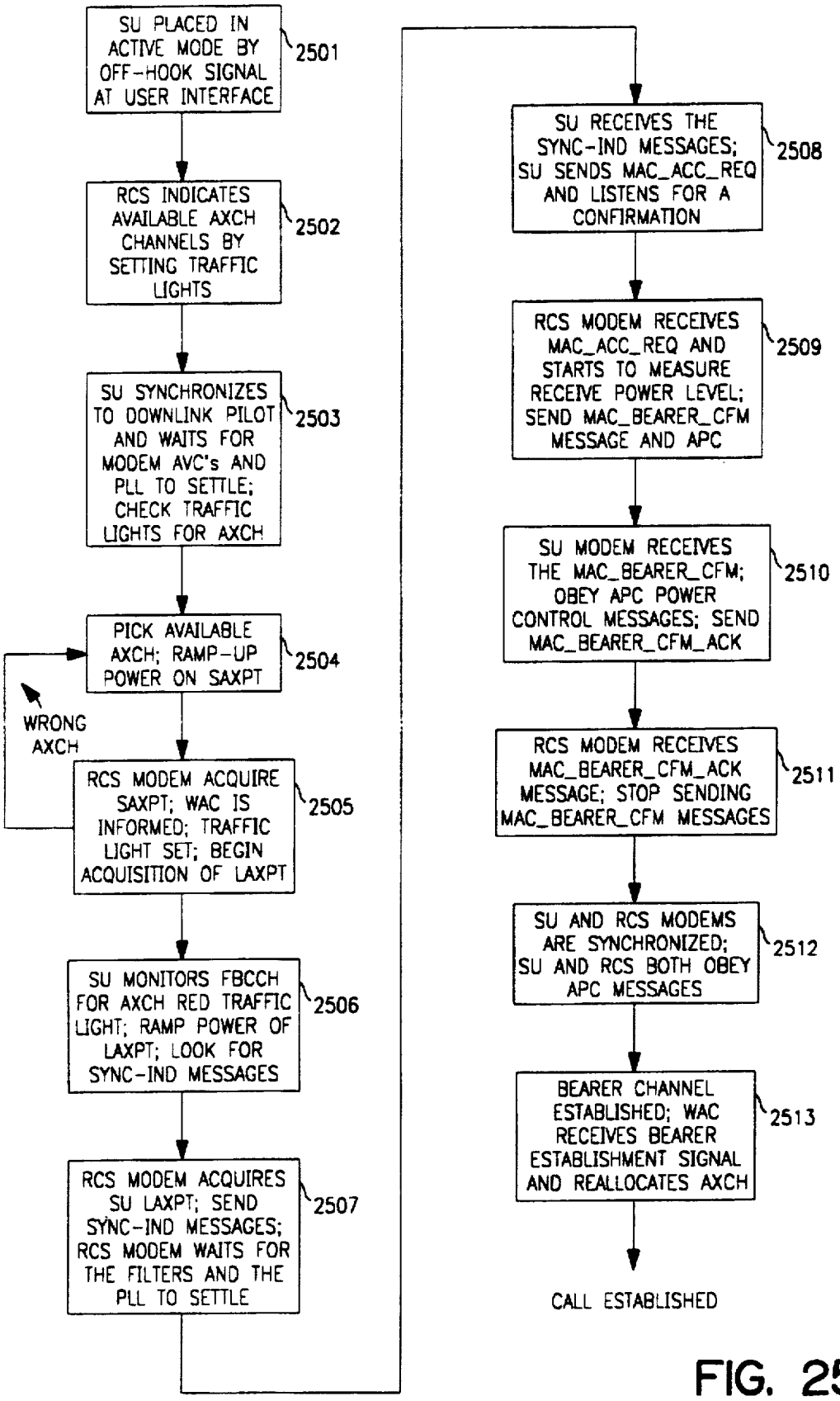
SU PLACED IN ACTIVE MODE BY OFF-HOOK SIGNAL AT USER INTERFACE
2501
RCS INDICATES AVAILABLE AXCH CHANNELS BY SETTING TRAFFIC LIGHTS
2502
SU SYNCHRONIZES TO DOWNLINK PILOT AND WAITS FOR MODEM AVC's AND PLL TO SETTLE; CHECK TRAFFIC LIGHTS FOR AXCH
2503
PICK AVAILABLE AXCH; RAMP-UP POWER ON SAXPT
2504
WRONG AXCH
RCS MODEM ACQUIRE SAXPT; WAC IS INFORMED; TRAFFIC LIGHT SET; BEGIN ACQUISITION OF LAXPT
2505
SU MONITORS FBCCH FOR AXCH RED TRAFFIC LIGHT; RAMP POWER OF LAXPT; LOOK FOR SYNC-IND MESSAGES
2506
RCS MODEM ACQUIRES SU LAXPT; SEND SYNC-IND MESSAGES; RCS MODEM WAITS FOR THE FILTERS AND THE PLL TO SETTLE
2507
SU RECEIVES THE SYNC-IND MESSAGES; SU SENDS MAC_ACC_REQ AND LISTENS FOR A CONFIRMATION
2508
RCS MODEM RECEIVES MAC_ACC_REQ AND STARTS TO MEASURE RECEIVE POWER LEVEL; SEND MAC_BEARER_CFM MESSAGE AND APC
2509
SU MODEM RECEIVES THE MAC_BEARER_CFM; OBEY APC POWER CONTROL MESSAGES; SEND MAC_BEARER_CFM_ACK
2510
RCS MODEM RECEIVES MAC_BEARER_CFM_ACK MESSAGE; STOP SENDING MAC_BEARER_CFM MESSAGES
2511
SU AND RCS MODEMS ARE SYNCHRONIZED; SU AND RCS BOTH OBEY APC MESSAGES
2512
BEARER CHANNEL ESTABLISHED; WAC RECEIVES BEARER ESTABLISHMENT SIGNAL AND REALLOCATES AXCH
2513
CALL ESTABLISHED

FIG. 25

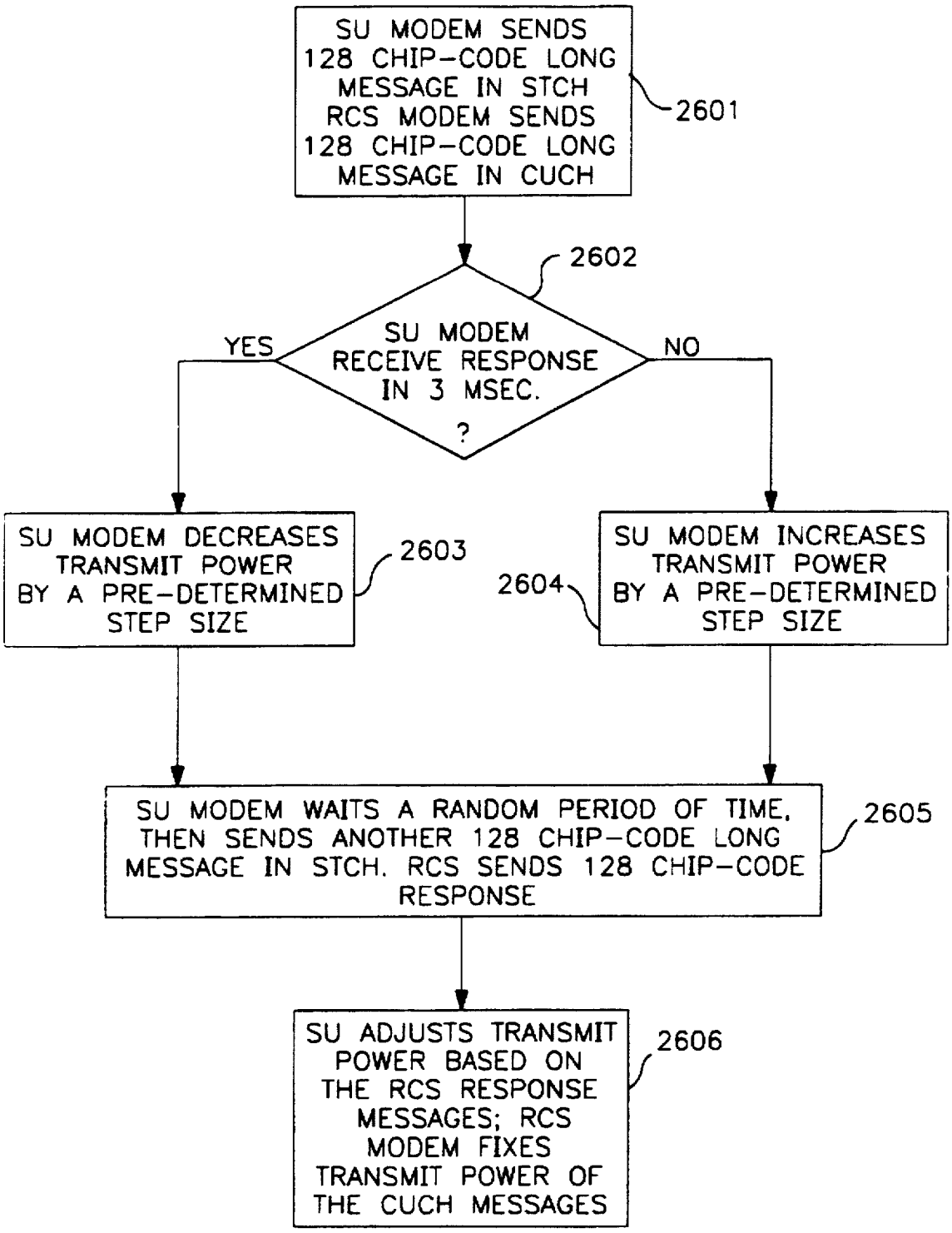
SU MODEM SENDS 128 CHIP-CODE LONG MESSAGE IN STCH RCS MODEM SENDS 128 CHIP-CODE LONG MESSAGE IN CUCH
2601
2602
SU MODEM RECEIVE RESPONSE IN 3 MSEC. ?
YES
NO
SU MODEM DECREASES TRANSMIT POWER BY A PRE-DETERMINED STEP SIZE
2603
SU MODEM INCREASES TRANSMIT POWER BY A PRE-DETERMINED STEP SIZE
2604
SU MODEM WAITS A RANDOM PERIOD OF TIME, THEN SENDS ANOTHER 128 CHIP-CODE LONG MESSAGE IN STCH. RCS SENDS 128 CHIP-CODE RESPONSE
2605
SU ADJUSTS TRANSMIT POWER BASED ON THE RCS RESPONSE MESSAGES; RCS MODEM FIXES TRANSMIT POWER OF THE CUCH MESSAGES
2606

FIG. 26

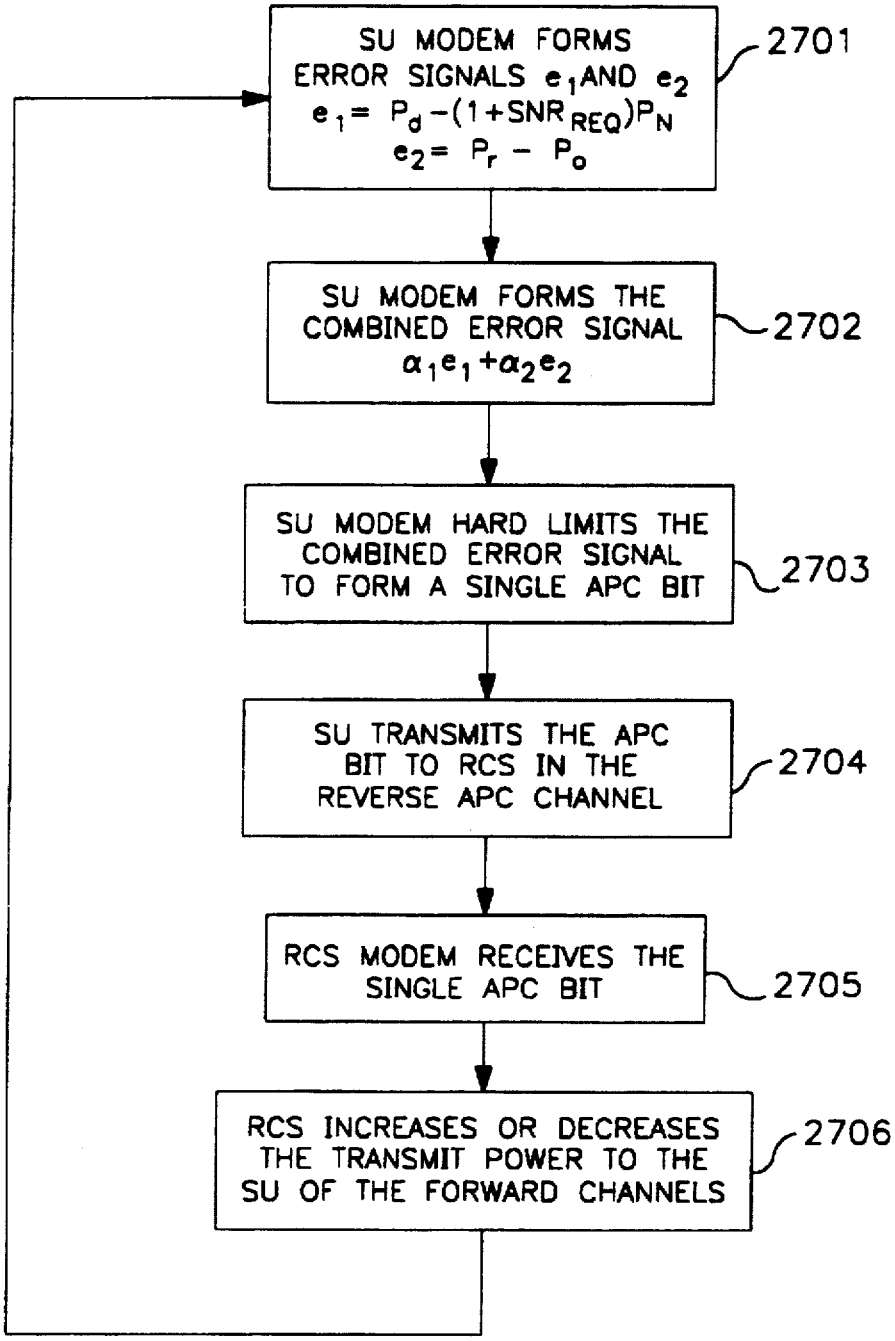
SU MODEM FORMS ERROR SIGNALS e_1 AND e_2
$e_1 = P_d - (1+SNR_{REQ})P_N$
$e_2 = P_r - P_o$
2701
SU MODEM FORMS THE COMBINED ERROR SIGNAL
$\alpha_1 e_1 + \alpha_2 e_2$
2702
SU MODEM HARD LIMITS THE COMBINED ERROR SIGNAL TO FORM A SINGLE APC BIT
2703
SU TRANSMITS THE APC BIT TO RCS IN THE REVERSE APC CHANNEL
2704
RCS MODEM RECEIVES THE SINGLE APC BIT
2705
RCS INCREASES OR DECREASES THE TRANSMIT POWER TO THE SU OF THE FORWARD CHANNELS
2706

FIG. 27

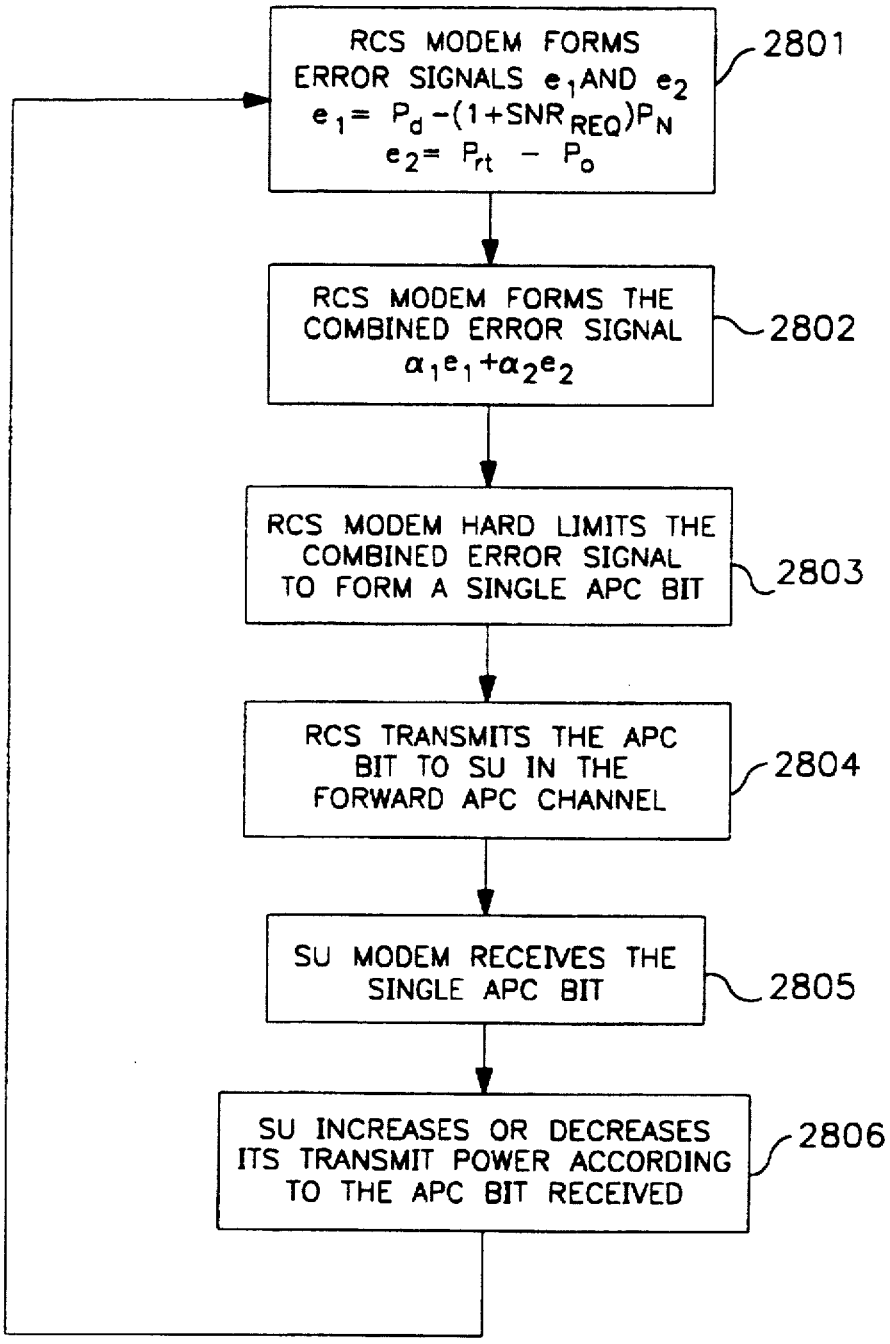
RCS MODEM FORMS ERROR SIGNALS e_1 AND e_2
$e_1 = P_d - (1+SNR_{REQ})P_N$
$e_2 = P_{rt} - P_o$
2801
RCS MODEM FORMS THE COMBINED ERROR SIGNAL
$\alpha_1 e_1 + \alpha_2 e_2$
2802
RCS MODEM HARD LIMITS THE COMBINED ERROR SIGNAL TO FORM A SINGLE APC BIT
2803
RCS TRANSMITS THE APC BIT TO SU IN THE FORWARD APC CHANNEL
2804
SU MODEM RECEIVES THE SINGLE APC BIT
2805
SU INCREASES OR DECREASES ITS TRANSMIT POWER ACCORDING TO THE APC BIT RECEIVED
2806

FIG. 28

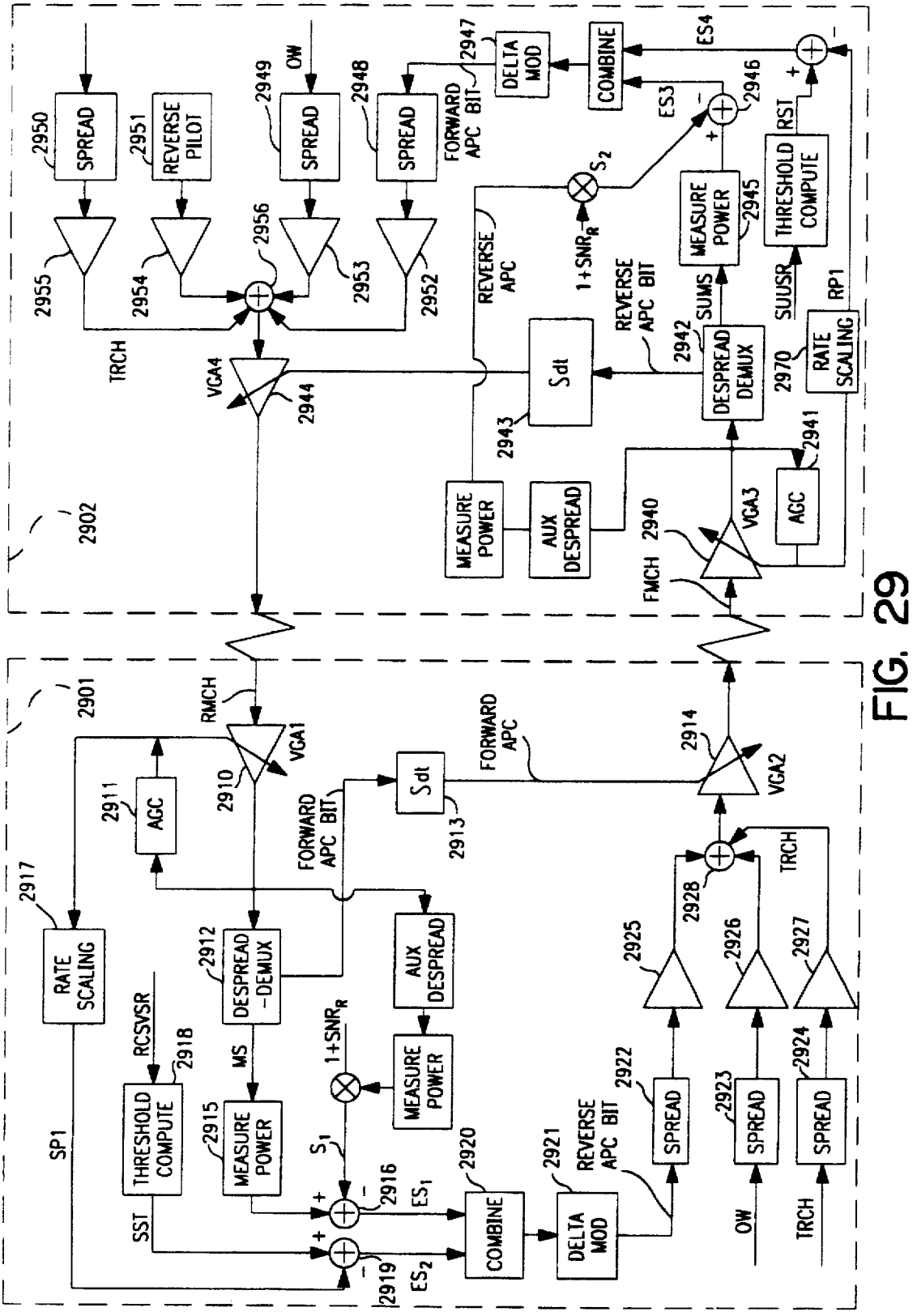
2902
2950
SPREAD
2951
REVERSE PILOT
2949
OW
SPREAD
2948
SPREAD
2947
FORWARD APC BIT
DELTA MOD
COMBINE
ES4
2946
ES3
2955
2954
2956
2953
2952
TRCH
VGA4
2944
REVERSE APC
1+SNR_R
S_2
MEASURE POWER
2945
THRESHOLD COMPUTE
RST
SUMS
SUUSR
RP1
RATE SCALING
2970
2942
DESPREAD DEMUX
REVERSE APC BIT
Sdt
2943
MEASURE POWER
AUX DESPREAD
2941
AGC
VGA3
2940
FMCH
2901
RMCH
VGA1
2910
2911
AGC
FORWARD APC BIT
Sdt
2913
FORWARD APC
2914
VGA2
2917
RATE SCALING
2912
DESPREAD -DEMUX
AUX DESPREAD
2928
TRCH
2925
2926
2927
RCSVSR
2918
THRESHOLD COMPUTE
MS
2915
MEASURE POWER
1+SNR_R
MEASURE POWER
SP1
SST
S_1
2916
ES_1
2920
COMBINE
2921
REVERSE APC BIT
DELTA MOD
2922
SPREAD
2923
SPREAD
2924
SPREAD
OW
TRCH
2919
ES_2

FIG. 29

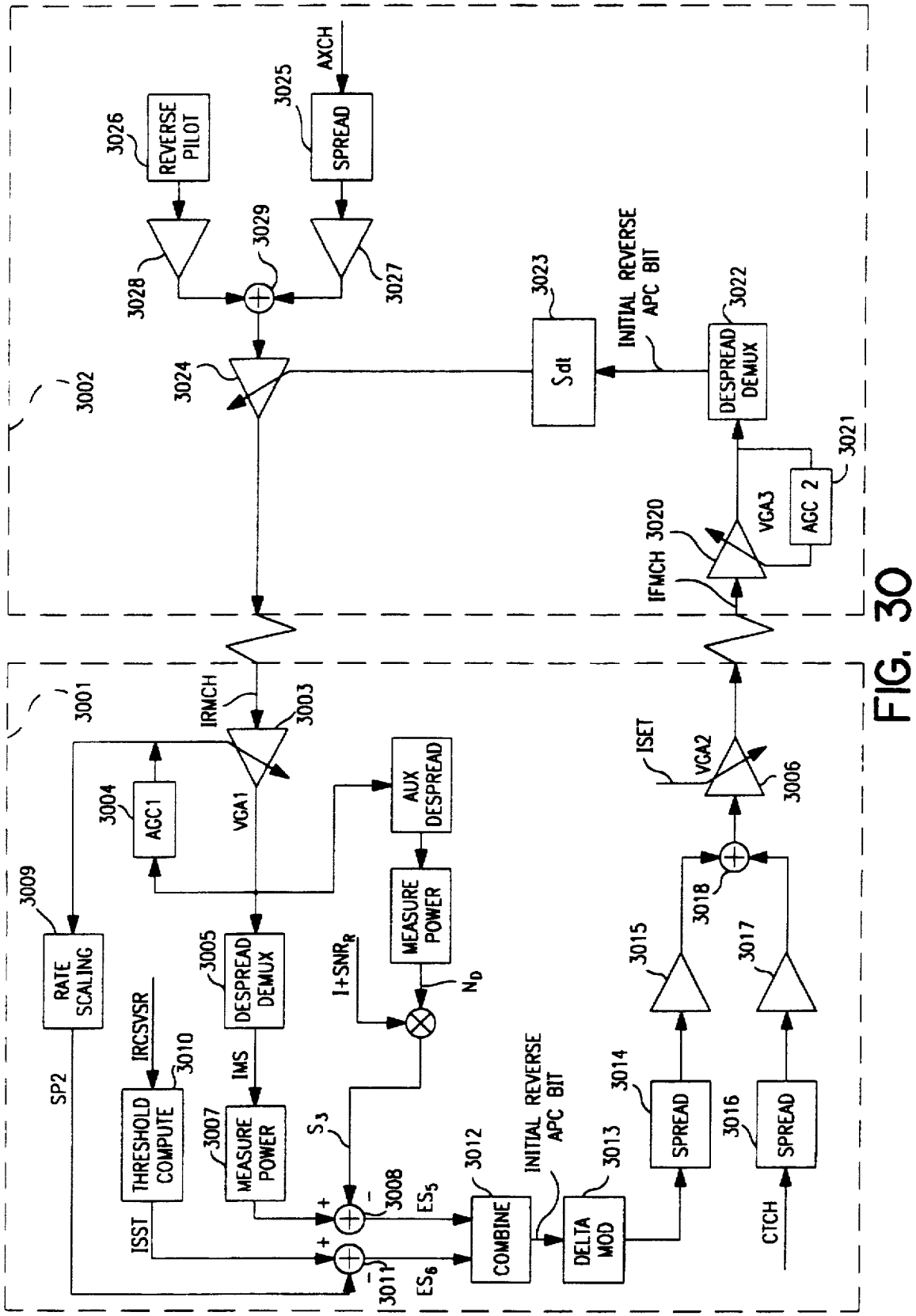
3002
3026
REVERSE PILOT
3025
AXCH
SPREAD
3028
3029
3027
3024
3023
Sdt
INITIAL REVERSE APC BIT
3022
DESPREAD DEMUX
3021
AGC 2
VGA3
IFMCH 3020
3001
IRMCH
3003
3004
AGC1
VGA1
AUX DESPREAD
MEASURE POWER
N_D
3009
RATE SCALING
3005
DESPREAD DEMUX
$I+SNR_R$
IRCSVSR
3010
THRESHOLD COMPUTE
SP2
IMS
3007
MEASURE POWER
S_3
3008
ES_5
3012
COMBINE
INITIAL REVERSE APC BIT
3013
DELTA MOD
3014
SPREAD
3015
3018
3017
3016
SPREAD
CTCH
ISST
3011
ES_6
ISET
VGA2
3006

FIG. 30

CODE DIVISION MULTIPLE ACCESS (CDMA) COMMUNICATION SYSTEM

This application claims the benefit of U.S. Provisional Application 60/000,775 filed Jun. 30, 1995.

BACKGROUND OF THE INVENTION

The present invention generally pertains to Code Division Multiple Access (CDMA) communications, also known as spread-spectrum communications. More particularly, the present invention pertains to a system and method for providing a high capacity, CDMA communications system which provides for one or more simultaneous user bearer channels over a given radio frequency, allowing dynamic allocation of bearer channel rate while rejecting multipath interference.

DESCRIPTION OF THE RELEVANT ART

Providing quality telecommunication services to user groups which are classified as remote, such as rural telephone systems and telephone systems in underdeveloped countries, has proved to be a challenge in recent years. These needs have been partially satisfied by wireless radio services, such as fixed or mobile frequency division multiplex (FDM), frequency division multiple access (FDMA), time division multiplex (TDM), time division multiple access (TDMA) systems, combination frequency and time division systems (FD/TDMA), and other land mobile radio systems. Usually, these remote services are faced with more potential users than can be supported simultaneously by their frequency or spectral bandwidth capacity.

Recognizing these limitations, recent advances in wireless communications have used spread spectrum modulation techniques to provide simultaneous communication by multiple users. Spread spectrum modulation refers to modulating a information signal with a spreading code signal; the spreading code signal being generated by a code generator where the period Tc of the spreading code is substantially less than the period of the information data bit or symbol signal. The code may modulate the carrier frequency upon which the information has been sent, called frequency-hopped spreading, or may directly modulate the signal by multiplying the spreading code with the information data signal, called direct-sequence spreading (DS). Spread-spectrum modulation produces a signal with bandwidth substantially greater than that required to transmit the information signal. Synchronous reception and despreading of the signal at the receiver recovers the original information. A synchronous demodulator in the receiver uses a reference signal to synchronize the despreading circuits to the input spread-spectrum modulated signal to recover the carrier and information signals. The reference signal can be a spreading code which is not modulated by an information signal. Such use of a synchronous spread-spectrum modulation and demodulation for wireless communication is described in U.S. Pat. No. 5,228,056 entitled SYNCHRONOUS SPREAD-SPECTRUM COMMUNICATIONS SYSTEM AND METHOD by Donald L. Schilling, which techniques are incorporated herein by reference.

Spread-spectrum modulation in wireless networks offers many advantages because multiple users may use the same frequency band with minimal interference to each user's receiver. Spread-spectrum modulation also reduces effects from other sources of interference. In addition, synchronous spread-spectrum modulation and demodulation techniques may be expanded by providing multiple message channels

for a single user, each spread with a different spreading code, while still transmitting only a single reference signal to the user. Such use of multiple message channels modulated by a family of spreading codes synchronized to a pilot spreading code for wireless communication is described in U.S. Pat. No. 5,166,951 entitled HIGH CAPACITY SPREAD-SPECTRUM CHANNEL by Donald L. Schilling, which is incorporated herein by reference.

One area in which spread-spectrum techniques are used is in the field of mobile cellular communications to provide personal communication services (PCS). Such systems desirably support large numbers of users, control Doppler shift and fade, and provide high speed digital data signals with low bit error rates. These systems employ a family of orthogonal or quasi-orthogonal spreading codes, with a pilot spreading code sequence synchronized to the family of codes. Each user is assigned one of the spreading codes as a spreading function. Related problems of such a system are: supporting a large number of users with the orthogonal codes, handling reduced power available to remote units, and handling multipath fading effects. Solutions to such problems include using phased-array antennas to generate multiple steerable beams, using very long orthogonal or quasi-orthogonal code sequences. These sequences may be reused by cyclic shifting of the code synchronized to a central reference, and diversity combining of multipath signals. Such problems associated with spread spectrum communications, and methods to increase capacity of a multiple access, spread-spectrum system are described in U.S. Pat. No. 4,901,307 entitled SPREAD SPECTRUM MULTIPLE ACCESS COMMUNICATION SYSTEM USING SATELLITE OR TERRESTRIAL REPEATERS by Gilhousen et al. which is incorporated herein by reference.

The problems associated with the prior art systems focus around reliable reception and synchronization of the receiver despreading circuits to the received signal. The presence of multipath fading introduces a particular problem with spread spectrum receivers in that a receiver must somehow track the multipath components to maintain code-phase lock of the receiver's despreading means with the input signal. Prior art receivers generally track only one or two of the multipath signals, but this method is not satisfactory because the combined group of low power multipath signal components may actually contain far more power than the one or two strongest multipath components. The prior art receivers track and combine the strongest components to maintain a predetermined Bit Error Rate (BER) of the receiver. Such a receiver is described, for example, in U.S. Pat. No. 5,109,390 entitled DIVERSITY RECEIVER IN A CDMA CELLULAR TELEPHONE SYSTEM by Gilhousen et al. A receiver that combines all multipath components, however, is able to maintain the desired BER with a signal power that is lower than that of prior art systems because more signal power is available to the receiver. Consequently, there is a need for a spread spectrum communication system employing a receiver that tracks substantially all of the multipath signal components, so that substantially all multipath signals may be combined in the receiver, and hence the required transmit power of the signal for a given BER may be reduced.

Another problem associated with multiple access, spread-spectrum communication systems is the need to reduce the total transmitted power of users in the system, since users may have limited available power. An associated problem requiring power control in spread-spectrum systems is related to the inherent characteristic of spread-spectrum systems that one user's spread-spectrum signal is received

by another user's receiver as noise with a certain power level. Consequently, users transmitting with high levels of signal power may interfere with other users' reception. Also, if a user moves relative to another user's geographic location, signal fading and distortion require that the users adjust their transmit power level to maintain a particular signal quality. At the same time, the system should keep the power that the base station receives from all users relatively constant. Finally, because it is possible for the spread-spectrum system to have more remote users than can be supported simultaneously, the power control system should also employ a capacity management method which rejects additional users when the maximum system power level is reached.

Prior spread-spectrum systems have employed a base station that measures a received signal and sends an adaptive power control (APC) signal to the remote users. Remote users include a transmitter with an automatic gain control (AGC) circuit which responds to the APC signal. In such systems the base station monitors the overall system power or the power received from each user, and sets the APC signal accordingly. Such a spread-spectrum power control system and method is described in U.S. Pat. No. 5,299,226 entitled ADAPTIVE POWER CONTROL FOR A SPREAD SPECTRUM COMMUNICATION SYSTEM AND METHOD, and U.S. Pat. No. 5,093,840 entitled ADAPTIVE POWER CONTROL FOR A SPREAD SPECTRUM TRANSMITTER, both by Donald L. Schilling and incorporated herein by reference. This open loop system performance may be improved by including a measurement of the signal power received by the remote user from the base station, and transmitting an APC signal back to the base station to effectuate a closed loop power control method. Such closed loop power control is described, for example, in U.S. Pat. No. 5,107,225 entitled HIGH DYNAMIC RANGE CLOSED LOOP AUTOMATIC GAIN CONTROL CIRCUIT to Charles E. Wheatley, III et al. and incorporated herein by reference.

These power control systems, however, exhibit several disadvantages. First, the base station must perform complex power control algorithms, increasing the amount of processing in the base station. Second, the system actually experiences several types of power variation: variation in the noise power caused by the variation in the number of users and variations in the received signal power of a particular bearer channel. These variations occur with different frequency, so simple power control algorithms can be optimized to compensate for only one of the two types of variation. Finally, these power algorithms tend to drive the overall system power to a relatively high level. Consequently, there is a need for a spread-spectrum power control method that rapidly responds to changes in bearer channel power levels, while simultaneously making adjustments to all users' transmit power in response to changes in the number of users. Also, there is a need for an improved spread-spectrum communication system employing a closed loop power control system which minimizes the system's overall power requirements while maintaining a sufficient BER at the individual remote receivers. In addition, such a system should control the initial transmit power level of a remote user and manage total system capacity.

Spread-spectrum communication systems desirably should support large numbers of users, each of which has at least one communication channel. In addition, such a system should provide multiple generic information channels to broadcast information to all users and to enable users to gain access to the system. Using prior art spread-spectrum systems this could only be accomplished by generating large numbers of spreading code sequences.

Further, spread-spectrum systems should use sequences that are orthogonal or nearly orthogonal to reduce the probability that a receiver locks to the wrong spreading code sequence or phase. The use of such orthogonal codes and the benefits arising therefrom are outlined in U.S. Pat. No. 5,103,459 entitled SYSTEM AND METHOD FOR GENERATING SIGNAL WAVEFORMS IN A CDMA CELLULAR TELEPHONE SYSTEM, by Gilhousen et al. and U.S. Pat. No. 5,193,094 entitled METHOD AND APPARATUS FOR GENERATING SUPER-ORTHOGONAL CONVOLUTIONAL CODES AND THE DECODING THEREOF, by Andrew J. Viterbi, both of which are incorporated herein by reference. However, generating such large families of code sequences with such properties is difficult. Also, generating large code families requires generating sequences which have a long period before repetition. Consequently, the time a receiver takes to achieve synchronization with such a long sequence is increased. Prior art spreading code generators often combine shorter sequences to make longer sequences, but such sequences may no longer be sufficiently orthogonal. Therefore, there is a need for an improved method for reliably generating large families of code sequences that exhibit nearly orthogonal characteristics and have a long period before repetition, but also include the benefit of a short code sequence that reduces the time to acquire and lock the receiver to the correct code phase. In addition, the code generation method should allow generation of codes with any period, since the spreading code period is often determined by parameters used such as data rate or frame size.

Another desirable characteristic of spreading code sequences is that the transition of the user data value occur at a transition of the code sequence values. Since data typically has a period which is divisible by 2^N, such a characteristic usually requires the code-sequence to be an even length of 2^N. However, code generators, as is well known in the art, generally use linear feedback shift registers which generate codes of length 2^N-1. Some generators include a method to augment the generated code sequence by inserting an additional code value, as described, for example, in U.S. Pat. No. 5,228,054 entitled POWER-OF-TWO LENGTH PSEUDONOISE SEQUENCE GENERATOR WITH FAST OFFSET ADJUSTMENT by Timothy Rueth et al and incorporated herein by reference. Consequently, the spread-spectrum communication system should also generate spreading code sequences of even length.

Finally, the spread-spectrum communication system should be able to handle many different types of data, such as FAX, voiceband data, and ISDN, in addition to traditional voice traffic. To increase the number of users supported, many systems employ encoding techniques such as ADPCM to achieve "compression" of the digital telephone signal. FAX, ISDN and other data, however, require the channel to be a clear channel. Consequently, there is a need for a spread spectrum communication system that supports compression techniques that also dynamically modify the spread spectrum bearer channel between an encoded channel and a clear channel in response to the type of information contained in the user's signal.

SUMMARY OF THE INVENTION

The present invention is embodied in a multiple access, spread-spectrum communication system which processes a

plurality of information signals received simultaneously over telecommunication lines for simultaneous transmission over a radio frequency (RF) channel as a code-division-multiplexed (CDM) signal. The system includes a radio carrier station (RCS) which receives a call request signal that corresponds to a telecommunication line information signal, and a user identification signal that identifies a user to which the call request and information signal are addressed. The receiving apparatus is coupled to a plurality of code division multiple access (CDMA) modems, one of which provides a global pilot code signal and a plurality of message code signals, and each of the CDMA modems combines one of the plurality of information signals with its respective message code signal to provide a spread-spectrum processed signal. The plurality of message code signals of the plurality of CDMA modems are synchronized to the global pilot code signal. The system also includes assignment apparatus that is responsive to a channel assignment signal for coupling the respective information signals received on the telecommunication lines to indicated ones of the plurality of modems; The assignment apparatus is coupled to a time-slot exchange means. The system further includes a system channel controller coupled to a remote call-processor and to the time-slot exchange means. The system channel controller is responsive to the user identification signal, to provide the channel assignment signal. In the system, an RF transmitter is connected to all of the modems to combine the plurality of spread-spectrum processed message signals with the global pilot code signal to generate a CDM signal. The RF transmitter also modulates a carrier signal with the CDM signal and transmits the modulated carrier signal through an RF communication channel.

The transmitted CDM signal is received from the RF communication channel by a subscriber unit (SU) which processes and reconstructs the transmitted information signal assigned to the subscriber. The SU includes a receiving means for receiving and demodulating the CDM signal from the carrier. In addition, the SU comprises a subscriber unit controller and a CDMA modem which includes a processing means for acquiring the global pilot code and despreading the spread-spectrum processed signal to reconstruct the transmitted information signal.

The RCS and the SUs each contain CDMA modems for transmission and reception of telecommunication signals including information signals and connection control signals. The CDMA modem comprises a modem transmitter having: a code generator for providing an associated pilot code signal and for generating a plurality of message code signals; a spreading means for combining each of the information signals, with a respective one of the message code signals to generate spread-spectrum processed message signals; and a global pilot code generator which provides a global pilot code signal to which the message code signals are synchronized.

The CDMA modem also comprises a modem receiver having associated pilot code acquisition and tracking logic. The associated pilot code acquisition logic includes an associated pilot code generator; a group of associated pilot code correlators for correlating code-phase delayed versions of the associated pilot signal with a receive CDM signal for producing a despread associated pilot signal. The code phase of the associated pilot signal is changed responsive to an acquisition signal value until a detector indicates the presence of the despread associated pilot code signal by changing the acquisition signal value. The associated pilot code signal is synchronized to the global pilot signal. The associated pilot code tracking logic adjusts the associated pilot code signal in phase responsive to the acquisition signal so that the signal power level of the despread associated pilot code signal is maximized. Finally, the CDMA modem receiver includes a group of message signal acquisition circuits. Each message signal acquisition circuit includes a plurality of receive message signal correlators for correlating one of the local receive message code signals with the CDM signal to produce a respective despread receive message signal.

To generate large families of nearly mutually orthogonal codes used by the CDMA modems, the present invention includes a code sequence generator. The code sequences are assigned to a respective logical channel of the spread-spectrum communication system, which includes In-phase (I) and Quadrature (Q) transmission over RF communication channels. One set of sequences is used as pilot sequences which are code sequences transmitted without modulation by a data signal. The code sequence generator circuit includes a long code sequence generator including a linear feedback shift register, a memory which provides a short, even code sequence, and a plurality of cyclic shift, feedforward sections which provide other members of the code family which exhibit minimal correlation with the code sequence applied to the feedforward circuit. The code sequence generator further includes a group of code sequence combiners for combining each phase shifted version of the long code sequence with the short, even code sequence to produce a group, or family, of nearly mutually orthogonal codes.

Further, the present invention includes several methods for efficient utilization of the spread-spectrum channels. First, the system includes a bearer channel modification system which comprises a group of message channels between a first transceiver and second transceiver. Each of the group of message channels supports a different information signal transmission rate. The first transceiver monitors a received information signal to determine the type of information signal that is received, and produces a coding signal relating to the coding signal. If a certain type of information signal is present, the first transitive switches transmission from a first message channel to a second message channel to support the different transmission rate. The coding signal is transmitted by the first transitive to the second transitive, and the second transitive switches to the second message channel to receive the information signal at a different transmission rate.

Another method to increase efficient utilization of the bearer message channels is the method of idle-code suppression used by the present invention. The spread-spectrum transitive receives a digital data information signal including a predetermined flag pattern corresponding to an idle period. The method includes the steps of: 1) delaying and monitoring the digital data signal; 2) detecting the predetermined flag pattern; 3) suspending transmission of the digital data signal when the flag pattern is detected; and 4) transmitting the data signal as a spread-spectrum signal when the flag pattern is not detected.

The present invention includes a system and method for closed loop automatic power control (AC) for the RCS and SUs of the spread-spectrum communication system. The SUs transmit spread-spectrum signals, the RCS acquires the spread-spectrum signals, and the RCS detects the received power level of the spread-spectrum signals plus any interfering signal including noise. The AC system includes the RCS and a plurality of SUs, wherein the RCS transmits a plurality of forward channel information signals to the SUs

as a plurality of forward channel spread-spectrum signals having a respective forward transmit power level, and each SU transmits to the base station at least one reverse spread-spectrum signal having a respective reverse transmit power level and at least one reverse channel spread-spectrum signal which includes a reverse channel information signal.

The AC includes an automatic forward power control (AFPC) system, and an automatic reverse power control (ARPC) system. The AFPC system operates by measuring, at the SU, a forward signal-to-noise ratio of the respective forward channel information signal, generating a respective forward channel error signal corresponding to a forward error between the respective forward signal-to-noise ratio and a pre-determined signal-to-noise value, and transmitting the respective forward channel error signal as part of a respective reverse channel information signal from the SU to the RCS. The RCS includes a plural number of AFPC receivers for receiving the reverse channel information signals and extracting the forward channel error signals from the respective reverse channel information signals. The RCU also adjusts the respective forward transmit power level of each one of the respective forward spread-spectrum signals responsive to the respective forward error signal.

The ARPC system operates by measuring, in the RCS, a reverse signal-to-noise ratio of each of the respective reverse channel information signals, generating a respective reverse channel error signal representing an error between the respective reverse channel signal-to-noise ratio and a respective pre-determined signal-to-noise value, and transmitting the respective reverse channel error signal as a part of a respective forward channel information signal to the SU. Each SU includes an ARPC receiver for receiving the forward channel information signal and extracting the respective reverse error signal from the forward channel information signal. The SU adjusts the reverse transmit power level of the respective reverse spread-spectrum signal responsive to the respective reverse error signal.

BRIEF DESCRIPTION OF THE DRAWINGS

FIG. **1** is a block diagram of a code division multiple access communication system according to the present invention.

FIG. **2***a* is a block diagram of a **36** stage linear shift register suitable for use with long spreading code of the code generator of the present invention.

FIG. **2***b* is a block diagram of circuitry which illustrates the feed) forward operation of the code generator.

FIG. **2***c* is a block diagram of an exemplary code generator of the present invention including circuitry for generating spreading code sequences from the long spreading codes and the short spreading codes.

FIG. **2***d* is an alternate embodiment of the code generator circuit to including delay elements to compensate for electrical circuit delays.

FIG. **3***a* is a graph of the constellation points of the pilot spreading code QPSK signal.

FIG. **3***b* is a graph of the constellation points of the message channel QPSK signal.

FIG. **3***c* is a block diagram of exemplary circuitry which implements the method of tracking the received spreading code phase of the present invention.

FIG. **4** is a block diagram of the tracking circuit that tracks the median of the received multipath signal components.

FIG. **5***a* is a block diagram of the tracking circuit that tracks the centroid of the received multipath signal components.

FIG. **5***b* is a block diagram of the Adaptive Vector Correlator.

FIG. **6** is a block diagram of exemplary circuitry which implements the acquisition decision method of the correct spreading code phase of the received pilot code of the present invention.

FIG. **7** is a block diagram of an exemplary pilot rake filter which includes the tracking circuit and digital phase locked loop for despreading the pilot spreading code, and generator of the weighting factors of the present invention.

FIG. **8***a* is a block diagram of an exemplary adaptive vector correlator and matched filter for despreading and combining the multipath components of the present invention.

FIG. **8***b* is a block diagram of an alternative implementation of the adaptive vector correlator and adaptive matched filter for despreading and combining the multipath components of the present invention.

FIG. **8***c* is a block diagram of an alternative embodiment of the adaptive vector correlator and adaptive matched filter for despreading and combining the multipath components of the present invention.

FIG. **8***d* is a block diagram of the Adaptive Matched Filter of one embodiment of the present invention.

FIG. **9** is a block diagram of the elements of an exemplary radio carrier station (RCS) of the present invention.

FIG. **10** is a block diagram of the elements of an exemplary multiplexer suitable for use in the RCS shown in FIG. **9**.

FIG. **11** is a block diagram of the elements of an exemplary wireless access controller (WAC) of the RCS shown in FIG. **9**.

FIG. **12** is a block diagram of the elements of an exemplary modem interface unit (MIU) of the RCS shown in FIG. **9**.

FIG. **13** is a high level block diagram showing the transmit, receive, control, and code generation circuitry of the CDMA modem.

FIG. **14** is a block diagram of the transmit section of the CDMA modem.

FIG. **15** is a block diagram of an exemplary modem input signal receiver.

FIG. **16** is a block diagram of an exemplary convolutional encoder as used in the present invention.

FIG. **17** is a block diagram of the receive section of the CDMA modern.

FIG. **18** is a block diagram of an exemplary adaptive matched filter as used in the CDMA modem receive section.

FIG. **19** is a block diagram of an exemplary pilot rake as used in the CDMA modem receive section.

FIG. **20** is a block diagram of an exemplary auxiliary pilot rake as used in the CDMA modem receive section.

FIG. **21** is a block diagram of an exemplary video distribution circuit (VDC) of the RCS shown in FIG. **9**.

FIG. **22** is a block diagram of an exemplary RF transmitter/receiver and exemplary power amplifiers of the RCS shown in FIG. **9**.

FIG. **23** is a block diagram of an exemplary subscriber unit (SU) of the present invention.

FIG. **24** is a flow-chart diagram of an exemplary call establishment algorithm for an incoming call request used by the present invention for establishing a bearer channel between an RCS and an SU.

FIG. **25** is a flow-chart diagram of an exemplary call establishment algorithm for an outgoing call request used by the present invention for establishing a bearer channel between an RCS and an SU.

FIG. **26** is a flow-chart diagram of an exemplary maintenance power control algorithm of the present invention.

FIG. **27** is a flow-chart diagram of an exemplary automatic forward power control algorithm of the present invention.

FIG. **28** is a flow-chart diagram of an exemplary automatic reverse power control algorithm of the present invention.

FIG. **29** is a block diagram of an exemplary closed loop power control system of the present invention when the bearer channel is established.

FIG. **30** is a block diagram of an exemplary closed loop power control system of the present invention during the process of establishing the bearer channel.

GLOSSARY OF ACRONYMS

Acronym	Definition
AC	Assigned Channels
AID	Analog-to-Digital
ADPCM	Adaptive Differential Pulse Code Modulation
AFPC	Automatic Forward Power Control
AGC	Automatic Gain Control
AMF	Adaptive Matched Filter
APC	Automatic Power Control
ARPC	Automatic Reverse Power Control
ASPT	Assigned Pilot
AVC	Adaptive Vector Correlator
AXCH	Access Channel
B-CDMA	Broadband Code Division Multiple Access
BCM	Bearer Channel Modification
BER	Bit Error Rate
BS	Base Station
CC	Call Control
CDM	Code Division Multiplex
CDMA	Code Division Multiple Access
CLK	Clock Signal Generator
CO	Central Office
CTCH	Control Channel
CUCH	Check-Up Channel
dB	Decibels
DCC	Data Combiner Circuitry
DI	Distribution Interface
DLL	Delay Locked Loop
DM	Delta Modulator
DS	Direct Sequence
EPIC	Extended PCM Interface Controller
FBCH	Fast Broadcast Channel
FDM	Frequency Division Multiplex
FD/TDMA	Frequency & Time Division Systems
FDMA	Frequency Division Multiple Access
FEC	Forward Error Correction
FSK	Frequency Shift Keying
FSU	Fixed Subscriber Unit
GC	Global Channel
GLPT	Global Pilot
GPC	Global Pilot Code
GPSK	Gaussian Phase Shift Keying
GPS	Global Positioning System
HPPC	High Power Passive Components
HSB	High Speed Bus
I	In-Phase
IC	Interface Controller
ISDN	Integrated Services Digital Network
ISST	Initial System Signal Threshold
LAXPT	Long Access Pilot
LAPD	Link Access Protocol
LCT	Local Craft Terminal
LE	Local Exchange
LFSR	Linear Feedback Shift Register

-continued

GLOSSARY OF ACRONYMS

Acronym	Definition
LI	Line Interface
LMS	Least Mean Square
LOL	Loss of Code Lock
LPF	Low Pass Filter
LSR	Linear Shift Register
MISR	Modem Input Signal Receiver
MIU	Modem Interface Unit
MM	Mobility Management
MOI	Modem Output Interface
MPC	Maintenance Power Control
MPSK	M-ary Phase Shift Keying
MSK	Minimum Shift Keying
MSU	Mobile Subscriber Unit
NE	Network Element
OMS	Operation and Maintenance System
OS	Operations System
OQPSK	Offset Quadrature Phase Shift Keying
OW	Order Wire
PARK	Portable Access Rights Key
PBX	Private Branch Exchange
PCM	Pulse Coded Modulation
PCS	Personal Communication Services
PG	Pilot Generator
PLL	Phase Locked Loop
PLT	Pilot
PN	Pseudonoise
POTS	Plain Old Telephone Service
PSTN	Public Switched Telephone Network
Q	Quadrature
QPSK	Quadrature Phase Shift Keying
RAM	Random Access Memory
RCS	Radio Carrier Station
RDI	Receiver Data Input Circuit
RDU	Radio Distribution Unit
RF	Radio Frequency
RLL	Radio Local Loop
SAXPT	Short Access Channel Pilots
SBCH	Slow Broadcast Channel
SHF	Super High Frequency
SIR	Signal Power to Interface Noise Power Ratio
SHC	Subscriber Line Interface Cfrcuit
SNR	Signal-to-Noise Ratio
SPC	Service PC
SPRT	Sequential Probablity Ratio Test
STCH	Status Channel
SU	Subscriber Unit
TDM	Time Division Multiplexing
TMN	Telecommunication Management Network
TRCH	Traffic Channels
TSI	Time-Slot Interchanger
TX	Transmit
TXIDAT	I-Modem Transmit Data Signal
TXQDAT	Q-Modem Transmit Data Signal
UHF	Ultra High Frequency
VCO	Voltage Controlled Oscillator
VDC	Video Distribution Circuit
VGA	Variable Gain Amplifier
VHF	Very High Frequency
WAC	Wireless Access Controller

DESCRIPTION OF THE EXEMPLARY EMBODIMENT

General System Description

The system of the present invention provides local-loop telephone to service using radio links between one or more base stations and multiple remote subscriber units. In the exemplary embodiment, a radio link is described for a base station communicating with a fixed subscriber unit (FSU), but the system is equally applicable to systems including multiple base stations with radio links to both FSUs and Mobile Subscriber Units (MSUs). Consequently, the remote subscriber units are referred to herein as Subscriber Units (SUs).

Referring to FIG. 1, Base Station (BS) **101** provides call connection to a local exchange (LE) **103** or any other telephone network switching interface, such as a private branch exchange (PBX) and includes a Radio Carrier Station (RCS) **104**. One or more RCSs **104**, **105**, **110** connect to a Radio Distribution Unit (RDU) **102** through links **131**, **132**, **137**, **138**, **139**, and RDU **102** interfaces with LE **103** by transmitting and receiving call set-up, control, and information signals through telco links **141**, **142**, **150**. SUs **116**, **119** communicate with the RCS **104** through radio links **161**, **162**, **163**, **164**, **165**. Alternatively, another embodiment of the invention includes several SUs and a "master" SU with functionality similar to the RCS. Such an embodiment may or may not have connection to a local telephone network.

The radio links **161** to **165** operate within the frequency bands of the DCS1800 standard (1.71–1.785 Ghz and 1.805–1.880 GHz); the US-PCS standard (1.85–1.99 Ghz); and the CEPT standard (2.0–2.7 GHz). Although these to bands are used in described embodiment, the invention is equally applicable to the entire UHF to SHF bands, including bands from 2.7 GHz to 5 GHz. The transmit and receive bandwidths are multiples of 3.5 MHz starting at 7 MHz, and multiples of 5 MHz starting at 10 MHz, respectively. The described system includes bandwidths of 7, 10, 10.5, 14 and 15 MHz. In the exemplary embodiment of the invention, the minimum guard band between the Uplink and Downlink is 20 MHz, and is desirably at least three times the signal bandwidth. The duplex separation is between 50 to 175 MHz, with the described invention using 50, 75, 80, 95, and 175 MHz. Other frequencies may also be used.

Although the described embodiment uses different spread-spectrum bandwidths centered around a carrier for the transmit and receive spread-spectrum channels, the present method is readily extended to systems using multiple spread-spectrum bandwidths for the transmit channels and multiple spread-spectrum bandwidths for the receive channels. Alternatively, because spread-spectrum communication systems have the inherent feature that one user's transmission appears as noise to another user's despreading receiver, an embodiment may employ the same spread-spectrum channel for both the transmit and receive path channels. In other words, Uplink and Downlink transmissions can occupy the same frequency band. Furthermore, the present method may be readily extended to multiple CDMA frequency bands, each conveying a respectively different set of messages, uplink, downlink or uplink and downlink.

The spread binary symbol information is transmitted over the radio links **161** to **165** using Quadrature Phase Shift Keying (QPSK) modulation with Nyquist Pulse Shaping in the present embodiment, although other modulation techniques may be used, including, but not limited to, Offset QPSK (OQPSK) and Minimum Shift Keying (MSK). Gaussian Phase Shift Keying (GPSK) and M-ary Phase Shift Keying (MPSK)

The radio links **161** to **165** incorporate Broadband Code Division Multiple Access (B-CDMA™) as the mode of transmission in both the Uplink and Downlink directions. CDMA (also known as Spread Spectrum) communication techniques used in multiple access systems are well-known, and are described in U.S. Pat. No. 5,228,056 entitled SYNCHRONOUS SPREAD-SPECTRUM COMMUNICATION SYSTEM AND METHOD by Donald T Schilling. The system described utilizes the Direct Sequence (DS) spreading technique. The CDMA modulator performs the spread-spectrum spreading code sequence generation, which can be a pseudonoise (PN) sequence; and complex DS modulation of the QPSK signals with spreading code sequences for the In-phase (I) and Quadrature (Q) channels. Pilot signals are generated and transmitted with the modulated signals, and pilot signals of the present embodiment are spreading codes not modulated by data. The pilot signals are used for synchronization, carrier phase recovery, and for estimating the impulse response of the radio channel. Each SU includes a single pilot generator and at least one CDMA modulator and demodulator, together known as a CDMA modem. Each RCS **104**, **105**, **110** has a single pilot generator plus sufficient CDMA modulators and demodulators for all of the logical channels in use by all SUs.

The CDMA demodulator despreads the signal with appropriate processing to combat or exploit multipath propagation effects. Parameters concerning the received power level are used to generate the Automatic Power Control (AC) information which, in turn, is transmitted to the other end of the communication link. The AC information is used to control transmit power of the automatic forward power control (AFPC) and automatic reverse power control (ARPC) links. In addition, each RCS **104**, **105** and **110** can perfonn Maintenance Power Control (MPC), in a manner similar to AC, to adjust the initial transmit power of each SU **111**, **112**, **115**, **117** and **118**. Demodulation is coherent where the pilot signal provides the phase reference.

The described radio links support multiple traffic channels with data rates of 8, 16, 32, 64, 128, and 144 kb/s. The physical channel to which a traffic channel is connected operates with a 64 k symbol/sec rate. Other data rates may be supported, and Forward Error Correction (FEC) coding can be employed. For the described embodiment, FEC with coding rate of ½ and constraint length 7 is used. Other rates and constraint lengths can be used consistent with the code generation techniques employed.

Diversity combining at the radio antennas of RCS **104**, **105** and **110** is not necessary because CDMA has inherent frequency diversity due to the spread bandwidth. Receivers include Adaptive Matched Filters (AMFs) (not shown in FIG. 1) which combine the multipath signals. In the present embodiment, the exemplary AMFs perform Maximal Ratio Combining.

Referring to FIG. **1**, RCS **104** interfaces to RDU **102** through links **131**, **132**, **137** with, for example, 1.544 Mb/s DS 1, 2.048 Mb/s E1; or HDSL Formats to receive and send digital data signals. While these are typical telephone company standardized interfaces, the present invention is not limited to these digital data formats only. The exemplary RCS line interface (not shown in FIG. 1) translates the line coding (such as HDB3, B8ZS, AMI) and extracts or produces framing information, performs Alarms and Facility signaling functions, as well as channel specific loop-back and parity check functions. The interfaces for this description provide 64 kb/s PCM encoded or 32 kb/s ADPCM encoded telephone traffic channels or ISDN channels to the RCS for processing. Other ADPCM encoding techniques can be used consistent with the sequence generation techniques.

The system of the present invention also supports bearer rate modification between the RCS **104** and each SU **111**, **112**, **115**, **117** and **118** communicating with RCS **104** in which a CDMA message channel supporting 64 kb/s may be assigned to voiceband data or FAX when rates above 4.8 kb/s are present. Such 64 kb/s bearer channel is considered an unencoded channel. For ISDN, bearer rate modification may be done dynamically, based upon the D channel messages.

In FIG. **1**, each SU **111**, **112**, **115**, **117** and **118** either includes or interfaces with a telephone unit **170**, or interfaces

with a local switch (PBX) **171**. The input from the telephone unit may include voice, voiceband data and signaling. The SU translates the analog signals into digital sequences, and may also include a Data terminal **172** or an ISDN interface **173**. The SU can differentiate voice input, voiceband data or FAX and digital data. The SU encodes voice data with techniques such as ADPCM at 32 kb/s or lower rates, and detects voiceband data or FAX with rates above 4.8 kb/s to modify the traffic channel (bearer rate modification) for unencoded transmission. Also, A-law, u-law, or no companding of the signal may be performed before transmission. For digital data, data compression techniques, such as idle flag removal, may also be used to conserve capacity and minimize interference.

The transmit power levels of the radio interface between RCS **104** and SUs **111**, **112**, **115**, **117** and **118** are controlled using two different closed loop power control methods. The Automatic Forward Power Control (AFPC) method determines the Downlink transmit power level, and the Automatic Reverse Power Control (ARPC) method determines the Uplink transmit power level. The logical control channel by which SU **111** and RCS **104**, for example, transfer power control information operates at least a 16 kHz update rate. Other embodiments may use a faster or slower update rate for example 64 kHz. These algorithms ensure that the transmit power of a user maintains an acceptable Bit-Error Rate (BER), maintains the system power at a minimum to conserve power, and maintains the power level of all SUs **111**, **112**, **115**, **117** and **118** received by RCS **104** at a nearly equal level.

In addition, the system uses an optional maintenance power control method during the inactive mode of a SU. When SU **111** is inactive or powered-down to conserve power, the unit occasionally activates to adjust its initial transmit power level setting in response to a maintenance power control signal from RCS **104**. The maintenance power signal is determined by the RCS **104** by measuring the received power level of SU **111** and present system power level and, from this, calculates the necessary initial transmit power. The method shortens the channel acquisition time of SU **111** to begin a communication. The method also prevents the transmit power level of SU **111** from becoming too high and interfering with other channels during the initial transmission before the closed loop power control reduces the transmit power.

RCS **104** obtains synchronization of its clock from an interface line such as, but not limited to, E1, T1, or HDSL interfaces. RCS **104** can also generate its own internal clock signal from an oscillator which may be regulated by a Global Positioning System (GPS) receiver. RCS **104** generates a Global Pilot Code, a channel with a spreading code but no data modulation, which can be acquired by remote SUs **111** through **118**. All transmission channels of the RCS are synchronized to the Pilot channel, and spreading code phases of code generators (not shown) used for Logical communication channels within RCS **104** are also synchronized to the Pilot channel's spreading code phase. Similarly, SUs **111** through **118** which receive the Global Pilot Code of RCS **104** synchronize the spreading and de-spreading code phases of the code generators (not shown) of the SUs to the Global Pilot Code.

RCS **104**, SU **111**, and RDU **102** may incorporate system redundancy of system elements and automatic switching between internal functional system elements upon a failure event to prevent loss or drop-out of a radio link, power supply, traffic channel, or group of traffic channels.

Logical Communication Channels

A 'channel' of the prior art is usually regarded as a communications path which is part of an interface and which can be distinguished from other paths of that interface without regard to its content. However, in the case of CDMA, separate communications paths are distinguished only by their content. The term 'logical channel' is used to distinguish the separate data streams, which are logically equivalent to channels in the conventional sense. All logical channels and sub-channels of the present invention are mapped to a common 64 kilo-symbols per second (ksym/s) QPSK stream. Some channels are synchronized to associated pilot codes which are generated from, and perform a similar function to the system Global Pilot Code (GPC). The system pilot signals are not, however, considered logical channels.

Several logical communication channels are used over the RF communication link between the RCS and SU. Each logical communication channel either has a fixed, predetermined spreading code or a dynamically assigned spreading code. For both pre-determined and assigned codes, the code phase is synchronized with the Pilot Code. Logical communication channels are divided into two groups: the Global Channel (GC) group includes channels which are either transmitted from the base station RCS to all remote SUs or from any SU to the RCS of the base station regardless of the SU's identity. The channels in the GC group may contain information of a given type for all users including those channels used by SUs to gain system access. Channels in the Assigned Channels (AC) group are those channels dedicated to communication between the RCS and a particular SU.

The Global Channels (GC) group provides for 1) Broadcast Control logical channels, which provide point to multipoint services for broadcasting messages to all SUs and paging messages to SUs; and 2) Access Control logical channels which provide point-to-point services on global channels for SUs to access the system and obtain assigned channels.

The RCS of the present invention has multiple Access Control logical channels, and one Broadcast Control group. An SU of the present invention has at least one Access Control channel and at least one Broadcast Control logical channel.

The Global logical channels controlled by the RCS are the Fast Broadcast Channel (FBCH) which broadcasts fast changing information concerning which services and which access channels are currently available, and the Slow Broadcast Channel (SBCH) which broadcasts slow changing system information and paging messages. The Access Channel (AXCH) is used by the SUs to access an RCS and gain access to assigned channels. Each AXCH is paired with a Control Channel (CTCH). The CTCH is used by the RCS to acknowledge and reply to access attempts by SUs. The Long Access Pilot (LAXPT) is transmitted synchronously with AXCH to provide the RCS with a time and phase reference.

An Assigned Channel (AC) group contains the logical channels that control a single telecommunication connection between the RCS and an SU. The functions developed when an AC group is formed include a pair of power control logical message channels for each of the Uplink and Downlink connections, and depending on the type of connection, one or more pairs of traffic channels. The Bearer Control function performs the required forward error control, bearer rate modification, and encryption functions.

Each SU **111**, **112**, **115**, **117** and **118** has at least one AC group formed when a telecommunication connection exists, and each RCS **104**, **105** and **110** has multiple AC groups formed, one for each connection in progress. An AC group

of logical channels is created for a connection upon successful establishment of the connection. The AC group includes encryption, FEC coding, and multiplexing on transmission, and FEC decoding, decryption and demultiplexing on reception.

Each AC group provides a set of connection oriented point-to-point services and operates in both directions between a specific RCS, for example, RCS **104** and a specific SU, for example, SU **111**. An AC group formed for a connection can control more than one bearer over the RF communication channel associated with a single connection. Multiple bearers are used to carry distributed to data such as, but not limited to, ISDN. An AC group can provide for the duplication of traffic channels to facilitate switch over to 64 kb/s PCM for high speed facsimile and modem services for the bearer rate modification function.

The assigned logical channels formed upon a successful call connection and included in the AC group are a dedicated signaling channel [order wire (OW)], an AC channel, and one or more Traffic channels (TRCH) which are bearers of 8, 16, 32, pr 64 kb/s depending on the service supported. For voice traffic, moderate rate coded speech, ADPCM, or PCM can be supported on the Traffic channels. For ISDN service types, two 64 kb/s TRCHs form the B channels and a 16 kb/s TRCH forms the D channel. Alternatively, the AC subchannel may either be separately modulated on its own CDMA channel, or may be time division multiplexed with a traffic channel or OW channel.

Each SU **111**, **112**, **115**, **117** and **118** of the present invention supports up to three simultaneous traffic channels. The mapping of the three logical channels for TRCHs to the user data is shown below in Table 1:

TABLE 1

Mapping of service types to the three avallable TRCH channels

Service	TRCH(0)	TRCH(1)	TRCH(2)
16 kb/s POTS	TRCH/16	not used	not used
32 + 64 kb/s POTS (during BCM)	TRCH/32	TRCH/64	not used
32 kb/s POTS	TRCH/32	not used	not used
64 kb/s POTS	not used	TRCH/64	not used
ISDN D	not used	not used	TRCH/16
ISDN B + D	TRCH/64	not used	TRCH/16
ISDN 2B + D	TRCH/64	TRCH/64	TRCH/16
Digital LL @ 64 kb/s	TRCH/64	not used	not used
Digital LL @ 2 × 64 kb/s	TRCH/64	TRCH/64	not used
Analog LL @ 64 kb/s	TRCH/64	not used	not used

The AC data rate is sent at 64 kb/s. The AC logical channel is not FEC coded to avoid delay and is transmitted at a relatively low power level to minimize capacity used for AC. Alternatively, the AC and OW may be separately modulated using complex spreading code sequences, or they may be time division multilplexed.

The OW logical channel is FEC coded with a rate ½ convolutional code. This logical channel is transmitted in bursts when signaling data is present to reduce interference. After an idle period, the OW signal begins with at least 35 symbols prior to the start of the data frame. For silent maintenance call data, the OW is transmitted continuously between frames of data. Table 2 summarizes the logical channels used in the exemplary embodiment:

TABLE 2

Logical Channels and sub-channels of the B-CDMA Air Interface

Channel name	Abbr.	Brief Description	Direction (forward or reverse)	Bit rate	Max BER	Power level	Pilot
Global Channels							
Fast Broadcast Channel	FBCH	Broadcasts fast-changing system information	F	16 kb/s	1e-4	Fixed	GLPT
Slow Broadcast Channel	SBCH	Broadcasts paging messages to FSUs and slow-changing system information	F	16 kb/s	1e-7	Fixed	GLPT
Access Channels	AXCH(i)	For initial access attempts by FSUs	R	32 kb/s	1e-7	Controlled by APC	LAXPT(i)
Control Channels	CTCH(i)	For granting access	F	32 kb/s	1e-7	Fixed	GLPT
Assigned Channels							
16 kb/s POTS	TRCH/16	General POTS use	F/R	16 kb/s	1e-4	Controlled by APC	F-GLPT R-ASPT
32 kb/s POTS	TRCH/32	General POTS use	F/R	32 kb/s	1e-4	Controlled by APC	F-GLPT R-ASPT
64 kb/s POTS	TRCH/64	POTS use for in-band modems/fax	F/R	64 kb/s	1e-4	Controlled by APC	F-GLPT R-ASPT
D channel	TRCH/16	ISDN D channel	F/R	16 kb/s	1e-7	Controlled by APC	F-GLPT R-ASPT
Order	OW	assigned	F/R	32	1e-7	Controlled	F-GLPT

TABLE 2-continued

Logical Channels and sub-channels of the B-CDMA Air Interface

Channel name	Abbr.	Brief Description	Direction (forward or reverse)	Bit rate	Max BER	Power level	Pilot
wire channel		signaling channel		kb/s		by APC	R-ASPT
APC channel	APC	carries APC commands	F/R	64 kb/s	2e-1	Controlled by APC	F-GLPT R-ASPT

The Spreading Codes

The CDMA code generators used to encode the logical channels of the present invention employ Linear Shift Registers (LSRs) with feedback logic which is a method well known in the art. The code generators of the present embodiment of the invention generate 64 synchronous unique sequences. Each RF communication channel uses a pair of these sequences for complex spreading (in-phase and quadrature) of the logical channels, so the generator gives 32 complex spreading sequences. The sequences are generated by a single seed which is initially loaded into a shift register circuit.

The Generation of Spreading Code Sequences and Seed Selection

The spreading code period of the present invention is defined as an integer multiple of the symbol duration, and the beginning of the code period is also the beginning of the symbol. The relation between bandwidths and the symbol lengths chosen for the exemplary embodiment of the present invention is:

BW (MHZ)	L(chips/symbol)
7	91
10	130
10.5	133
14	182
15	195

The spreading code length is also a multiple of 64 and of 96 for ISDN frame support. The spreading code is a sequence of symbols, called chips or chip values. The general methods of generating pseudorandom sequences using Galois Field mathematics is known to those skilled in the art; however, a unique set, or family, of code sequences has been derived for the present invention. First, the length of the linear feedback shift register to generate a code sequence is chosen, and the initial value of the register is called a "seed". Second, the constraint is imposed that no code sequence generated by a code seed may be a cyclic shift of another code sequence generated by the same code seed. Finally, no code sequence generated from one seed may be a cyclic shift of a code sequence generated by another seed.

It has been determined that the spreading code length of chip values of the present invention is:

$$128\times233415=29877120 \quad (1)$$

The spreading codes are generated by combining a linear sequence of period 233415 and a nonlinear sequence of period 128

The FBCH channel of the exemplary embodiment is an exception because it is not coded with the 128 length sequence, so the FBCH channel spreading code has period 233415.

The nonlinear sequence of length 128 is implemented as a fixed sequence loaded into a shift register with a feed-back connection. The fixed sequence can be generated by an m-sequence of length 127 padded with an extra logic 0, 1, or random value as is well known in the art.

The linear sequence of length L=233415 is generated using a linear feedback shift register (LFSR) circuit with 36 stages. The feedback connections correspond to a irreducible polynomial h(n) of degree 36. The polynomial h(x) chosen for the exemplary embodiment of the present invention is

$$h(x)=x^{36}+x^{35}+x^{30}+x^{28}+x^{26}+x^{25}+x^{22}+x^{20}+x^{19}+x^{17}+x^{16}+x^{15}+x^{14}+x^{12}+x^{11}+x^{9}+x^{8}+x^{4}+x^{3}+x^{2}+1$$

or, in binary notation

$$h(x)=(1100001010110010110111101101100011101) \quad (2)$$

A group of "seed" values for a LFSR representing the polynomial h(x) of equation (2) which generates code sequences that are nearly orthogonal with each other is determined. The first requirement of the seed values is that the seed values do not generate two code sequences which are simply cyclic shifts of each other.

The seeds are represented as elements of $GF(2^{36})$ which is the field of residue classes modulo h(x). This field has a primitive element $\delta=x^2+x+1$. The binary representation of δ is

$$\delta=000000000000000000000000000000000111 \quad (3)$$

Every element of $GF(2^{36})$ can also be written as a power of δ reduced modulo h(x). Consequently, the seeds are represented as powers of δ, the primitive element.

The solution for the order of an element does not require a search of all values; the order of an element divides the order of the field ($GF(2^{36})$). When δ is any element of $GF(2^{36})$ with

$$x^e\equiv1 \quad (4)$$

for some e, then $e|2^{36}-1$. Therefore, the order of any element in $GF(2^{36})$ divides $2^{36}-1$.

Using these constraints, it has been determined that a numerical search generates a group of seed values, n, which are powers of δ, the primitive element of h(x).

The present invention includes a method to increase the number of available seeds for use in a CDMA communication system by recognizing that certain cyclic shifts of the previously determined code sequences may be used simul-

taneously. The round trip delay for the cell sizes and bandwidths of the present invention are less than 3000 chips. In one embodiment of the present invention, sufficiently separated cyclic shifts of a sequence can be used within the same cell without causing ambiguity for a receiver attempting to determine the code sequence. This method enlarges the set of sequences available for use.

By implementing the tests previously described, a total of 3879 primary seeds were determined through numerical computation. These seeds are given mathematically as

$$\delta^n \text{modulo } h(x) \quad (5)$$

where 3879 values of n are listed in the Appendix A, with δ=(00. . . . 00111) as before in (3).

When all primary seeds are known, all secondary seeds of the present invention are derived from the primary seeds by shifting them multiples of 4095 chips modulo h(x). Once a family of seed values is determined, these values are stored in memory and assigned to logical channels as necessary. Once assigned, the initial seed value is simply loaded into LFSR to produce the required spreading code sequence associated with the seed value.

Rapid Acquisition Feature of Long and Short Codes.

Rapid acquisition of the correct code phase by a spread-spectrum receiver is improved by designing spreading codes which are faster to detect. The present embodiment of the invention includes a new method of generating code sequences that have rapid acquisition properties by using one or more of the following methods. First, a long code may be constructed from two or more short codes. The new implementation uses many code sequences, one or more of which are rapid acquisition sequences of length L that have average acquisition phase searches r=log 2L. Sequences with such properties are well known to those practiced in the art. The average number of acquisition test phases of the resulting long sequence is a multiple of r=log 2L rather than half of the number of phases of the long sequence.

Second, a method of transmitting complex valued spreading code sequences (In-phase (I) and Quadrature (Q) sequences) in a pilot spreading code signal may be used rather than transmitting real valued sequences. Two or more separate code sequences may be transmitted over the complex channels. If the sequences have different phases, an acquisition may be done by acquisition circuits in parallel over the different code sequences when the relative phase shift between the two or more code channels is known. For example, for two sequences, one can be sent on an In phase (I) channel and one on the Quadrature (Q) channel. To search the code sequences, the acquisition detection means searches the two channels, but begins the (Q) channel with an offset equal to one-half of the spreading code sequence length. With code sequence length of N, the acquisition means starts the search at N/2 on the (Q) channel. The average number of tests to find acquisition is N/2 for a single code search, but searching the (I) and phase delayed (Q) channel in parallel reduces the average number of tests to N/4. The codes sent on each channel could be the same code, the same code with one channel's code phase delayed, or different code sequences.

Epoch and Sub-epoch Structures

The long complex spreading codes used for the exemplary system of the present invention have a number of chips after which the code repeats. The repetition period of the spreading sequence is called an epoch. To map the logical channels to CDMA spreading codes, the present invention uses an Epoch and Sub-epoch structure. The code period for the CDMA spreading code to modulate logical channels is 29877120 chips/code period which is the same number of chips for all bandwidths. The code period is the epoch of the present invention, and Table 3 below defines the epoch duration for the supported chip rates. In addition, two subdepochs are defined over the spreading code epoch and are 233415 chips and 128 chips long.

The 233415 chip sub-epoch is referred to as a long sub-epoch, and is used for synchronizing events on the RF communication interface such as encryption key switching and changing from global to assigned codes. The 128 chip short epoch is defined for use as an additional timing reference. The highest symbol rate used with a single CDMA code is 64 ksym/s. There is always an integer number of chips in a symbol duration for the supported symbol rates 64, 32, 16, and 8 ksym/s.

TABLE 3

Bandwidths, Chip Rates, and Epochs

Bandwidth (MHz)	Chip Rate, CompTex (Mchip/sec)	number of chips in a 64 kbit/sec symbol	128 chip sub-epoch duration* (μs)	233415 chip sub-epoch duration* (ms)	Epoch duration (sec)
7	5.824	91	21.978	40.078	5.130
10	8.320	130	15.385	28.055	3.591
10.5	8.512	133	15.038	27.422	3.510
14	11.648	182	10.989	20.039	2.565
15	12.480	195	10.256	18.703	2.394

*numbers in these columns are rounded to 5 digits.

Mapping of the Logical Channels to Epochs and Sub-epochs

The complex spreading codes are designed such that the beginning of the sequence epoch coincides with the beginning of a symbol for all of the bandwidths supported. The present invention supports bandwidths of 7, 10, 10.5, 14, and 15 MHz. Assuming nominal 20% roll-off, these bandwidths correspond to the following chip rates in Table 4.

TABLE 4

Supported Bandwidths and Chip Rates for CDMA.

BW (MHz)	R_c (Complex Mchips/sec)	Excess BW, %	L: (R_c/L) = 64 k	Factorization of L
7	5.824	20.19	91	7 × 13
10	8.320	20.19	130	2 × 5 × 13
10.5	8.512	23.36	133	7 × 19
14	11.648	20.19	182	2 × 7 × 13
15	12.480	20.19	195	3 × 5 × 13

The number of chips in an epoch is:

$$N=29877120=2^7\times3^3\times5\times7\times13\times19 \quad (6)$$

If interleaving is used, the beginning of an interleaver period coincides with the beginning of the sequence epoch. The spreading sequences generated using the method of the present invention can support interleaver periods that are multiples of 1.5 ms for various bandwidths.

Cyclic sequences of the prior art are generated using linear feedback shift register (LFSR) circuits. However, this method does not generate sequences of even length. One

embodiment of the spreading code sequence generator using the code seeds generated previously is shown in FIG. **2***a*, FIG. **2***b*, and FIG. **2***c*. The present invention uses a 36 stage LFSR **201** to generate a sequence of period $N'=233415=3^3\times 5\times 7\times 13\times 19$, which is C_O in FIG. **2***a*. In FIGS. **2***a*, **2***b*, and **2***c*, the symbol ⊕ represents a binary addition (EXCLUSIVE-OR). A sequence generator designed as above generates the in-phase and quadrature parts of a set of complex sequences. The tap connections and initial state of the 36 stage LFSR determine the sequence generated by this circuit. The tap coefficients of the 36 stage LFSR are determined such that the resulting sequences have the period 233415. Note that the tap connections shown in FIG. **2***a* correspond to the polynomial given in equation (2). Each resulting sequence is then overlaid by binary addition with the 128 length sequence C* to obtain the epoch period 29877120.

FIG. **2***b* shows a Feed Forward (FF) circuit **202** which is used in the code generator. The signal X[n−1] is output of the chip delay **211**, and the input of the chip delay **211** is X[n]. The code chip C[n] is formed by the logical adder **212** from the input X[n] and X[n−1]. FIG. **2***c* shows the complete spreading code generator. From the LFSR **201**, output signals go through a chain of up to 63 single stage FFs **203** cascaded as shown. The output of each FF is overlaid with the short, even code sequence C * period $128=2^7$ which is stored in code memory **222** and which exhibits spectral characteristics of a pseudorandom sequence to obtain the epoch N=29877120. This sequence of 128 is determined by using an m-sequence (PN sequence) of length $127=2^7-1$ and adding a bit-value, such as logic 0, to the sequence to increase the length to 128 chips. The even code sequence C * is input to the even code shift register **221**, which is a cyclic register, that continually outputs the sequence. The short sequence is then combined with the long sequence using an EXCLUSIVE-OR operation **213**, **214**, **220**.

As shown in FIG. **2***c*,up to 63 spreading code sequences C_O through C_{63} are generated by tapping the output signals of FFs **203** and logically adding the short sequence C* in binary adders **213**, **214**, and **220**, for example. One skilled in the art would realize that the implementation of FF **203** will create a cumulative delay effect for the code sequences produced at each FF stage in the chain. This delay is due to the nonzero electrical delay in the electronic components of the implementation. The timing problems associated with the delay can be mitigated by inserting additional delay elements into the FF chain in one version of the embodiment of the invention. The FF chain of FIG. **2***c* with additional delay elements is shown in FIG. **2***d*.

The code-generators in the exemplary embodiment of the present invention are configured to generate either global codes, or assigned codes. Global codes are CDMA codes that can be received or transmitted by all users of the system. Assigned codes are CDMA codes that are allocated for a particular connection. When a set of sequences are generated from the same generator as described, only the seed of the 36 stage LFSR is specified to generate a family of sequences. Sequences for all the global codes, are generated using the same LFSR circuit. Therefore, once an SU has synchronized to the Global pilot signal from an RCS and knows the seed for the LFSR circuit for the Global Channel codes, it can generate not only the pilot sequence but also all other global codes used by the RCS.

The signal that is upconverted to RF is generated as follows. The output signals of the above shift register circuits are converted to an antipodal sequence (0 maps into +1, 1 maps into −1). The Logical channels are initially converted to QPSK signals, which are mapped as constellation points as is well known in the art. The In-phase and Quadrature channels of each QPSK signal form the real and imaginary parts of the complex data value. Similarly, two spreading codes are used to form complex spreading chip values. The complex data are spread by being multiplied by the complex spreading code. Similarly, the received complex data is correlated with the conjugate of the complex spreading code to recover despread data.

Short Codes

Short codes are used for the initial ramp-up process when an SU accesses an RCS. The period of the short codes is equal to the symbol duration and the start of each period is aligned with a symbol boundary. Both SU and RCS derive the real and imaginary parts of the short codes from the last eight feed-forward sections of the sequence generator producing the global codes for that cell.

The short codes that are in use in the exemplary embodiment of the invention are updated every 3 ms. Other update times that are consistent with the symbol rate may be used. Therefore, a change-over occurs every 3 ms starting from the epoch boundary. At a change-over, the next symbol length portion of the corresponding feed-forward output becomes the short code. When the SU needs to use a particular short code, it waits until the first 3 ms boundary of the next epoch and stores the next symbol length portion output from the corresponding FF section. This shall be used as the short code until the next change-over, which occurs 3 ms later.

The signals represented by these short codes are known as Short Access Channel pilots (SAXPTs).

Mapping of Logical Channels to Spreading Codes

The exact relationship between the spreading code sequences and the CDMA logical channels and pilot signals is documented in Table 5a and Table 5b. Those signal names ending in '-CH' correspond to logical channels. Those signal names ending in '-PT' correspond to pilot signals, which are described in detail below.

TABLE 5a

Spreading code sequences and global CDMA codes

Sequence	Quadrature	Logical Channel or Pilot Signal	Direction
C_0	I	FPCH	Forward (F)
C_1	Q	FBCH	F
$C_2 \oplus C^*$	I	GLPT	F
$C_3 \oplus C^*$	Q	GLPT	F
$C_4 \oplus C^*$	I	SBCH	F
$C_5 \oplus C^*$	Q	SBCH	F
$C_6 \oplus C^*$	I	CTCH(0)	F
$C_7 \oplus C^*$	Q	CTCH (0)	F
$C_8 \oplus C^*$	I	APCH (1)	F
$C_9 \oplus C^*$	Q	APCH (1)	F
$C_{10} \oplus C^*$	I	CTCH (1)	F
$C_{11} \oplus C^*$	Q	CTCH(1)	F
$C_{12} \oplus C^*$	I	APCH(1)	F
$C_{13} \oplus C^*$	Q	APCH (1)	F
$C_{14} \oplus C^*$	I	CTCH (2)	F
$C_{15} \oplus C^*$	Q	CTCH (2)	F
$C_{16} \oplus C^*$	I	APCH (2)	F
$C_{17} \oplus C^*$	Q	APCH (2)	F
$C_{18} \oplus C^*$	I	CTCH (3)	F
$C_{19} \oplus C^*$	Q	CTCH (3)	F
$C_{20} \oplus C^*$	I	APCH (3)	F
$C_{21} \oplus C^*$	Q	APCH (3)	F
$C_{22} \oplus C^*$	I	reserved	—

TABLE 5a-continued

Spreading code sequences and global CDMA codes

Sequence	Quadrature	Logical Channel or Pilot Signal	Direction
$C_{23}\oplus C^*$	Q	reserved	—
. . .	. . .	. . .	. . .
. . .	. . .	. . .	. . .
$C_{40}\oplus C^*$	I	reserved	—
$C_{41}\oplus C^*$	Q	reserved	—
$C_{42}\oplus C^*$	I	AXCH(3)	Reverse (R)
$C_{43}\oplus C^*$	Q	AXCH(3)	R
$C_{44}\oplus C^*$	I	LAXPT(3) SAXPT(3) seed	R
$C_{45}\oplus C^*$	Q	LAXPT(3) SAXPT(3) seed	R
$C_{46}\oplus C^*$	I	AXCH(2)	R
$C_{47}\oplus C^*$	Q	AXCH(2)	R
$C_{48}\oplus C^*$	I	LAXPT(2) SAXPT(2) seed	R
$C_{49}\oplus C^*$	Q	LAXPT(2) SAXPT(2) seed	R
$C_{50}\oplus C^*$	I	AXCH(1)	R
$C_{51}\oplus C^*$	Q	AXCH(1)	R
$C_{52}\oplus C^*$	I	LAXPT(1) SAXPT(1) seed	R
$C_{53}\oplus C^*$	Q	LAXPT(1) SAXPT(1) seed	R
$C_{54}\oplus C^*$	I	AXCH(0)	R
$C_{55}\oplus C^*$	Q	AXCH(0)	R
$C_{56}\oplus$[00ab]C^*	I	LAXPT(0) SAXPT(0) seed	R
$C_{57}\oplus C^*$	Q	LAXPT(0) SAXPT(0) seed	R
$C_{58}\oplus C^*$	I	IDLE	—
$C_{59}\oplus C^*$	Q	IDLE	—
$C_{60}\oplus C^*$	I	AUX	R
$C_{61}\oplus C^*$	Q	AUX	R
$C_{62}\oplus C^*$	I	reserved	—
$C_{63}\oplus C^*$	Q	reserved	—

TABLE 5b

Spreading code sequences and assigned CDMA codes.

Sequence	Quadrature	Logical Channel or Pilot Signal	Direction
$C_0\oplus C^*$	I	ASPT	Reverse (R)
$C_1\oplus C^*$	Q	ASPT	R
$C_2\oplus C^*$	I	APCH	R
$C_3\oplus C^*$	Q	APCH	R
$C_4\oplus C^*$	I	OWCH	R
$C_5\oplus C^*$	Q	OWCH	R
$C_6\oplus C^*$	I	TRCH(0)	R
$C_7\oplus C^*$	Q	TRCH(0)	R
$C_8\oplus C^*$	I	TRCH(1)	R
$C_9\oplus C^*$	Q	TRCH(1)	R
$C_{10}\oplus C^*$	I	TRCH(2)	R
$C_{11}\oplus C^*$	Q	TRCH(2)	R
$C_{12}\oplus C^*$	I	TRCH(3)	R
$C_{13}\oplus C^*$	Q	TRCH(3)	R
$C_{14}\oplus C^*$	I	reserved	—
$C_{15}\oplus C^*$	Q	reserved	—
. . .	. . .	. . .	. . .
. . .	. . .	. . .	. . .
$C_{44}\oplus C^*$	I	reserved	—
$C_{45}\oplus C^*$	Q	reserved	—
$C_{46}\oplus C^*$	I	TRCH(3)	Forward (F)
$C_{47}\oplus C^*$	Q	TRCH(3)	F
$C_{48}\oplus C^*$	I	*TRCH(2)	F
$C_{49}\oplus C^*$	Q	TRCH(2)	F
$C_{50}\oplus C^*$	I	TRCH(1)	F
$C_{51}\oplus C^*$	Q	TRCH(1)	F
$C_{52}\oplus C^*$	I	TRCH(0)	F
$C_{53}\oplus C^*$	Q	TRCH(0)	F

TABLE 5b-continued

Spreading code sequences and assigned CDMA codes.

Sequence	Quadrature	Logical Channel or Pilot Signal	Direction
$C_{54}\oplus C^*$	I	OWCH	F
$C_{55}\oplus C^*$	Q	OWCH	F
$C_{56}\oplus C^*$	I	APCH	F
$C_{57}\oplus C^*$	Q	APCH	F
$C_{58}\oplus C^*$	I	IDLE	—
$C_{59}\oplus C^*$	Q	IDLE	—
$C_{60}\oplus C^*$	I	reserved	—
$C_{61}\oplus C^*$	Q	reserved	—
$C_{62}\oplus C^*$	I	reserved	—
$C_{63}\oplus C^*$	Q	reserved	—

For global codes, the seed values for the 36 bit shift register are chosen to avoid using the same code, or any cyclic shift of the same code, within the same geographical area to prevent ambiguity or harmful interference. No assigned code is equal to, or a cyclic shift of a global code.

Pilot Signals

The pilot signals are used for synchronization, carrier phase recovery, and for estimating the impulse response of the radio channel.

The RCS **104** transmits a forward link pilot carrier reference as a complex pilot code sequence to provide time and phase reference for all SUs **111**, **112**, **115**, **117** and **118** in its service area. The power level of the Global Pilot (GLPT) signal is set to provide adequate coverage over the whole RCS service area, which area depends on the cell size. With only one pilot signal in the forward link, the reduction in system capacity due to the pilot energy is negligible.

The SUs **111**, **112**, **115**, **117** and **118** each transmits a pilot carrier reference as a quadrature modulated (complex-valued) pilot spreading code sequence to provide a time and phase reference to the RCS for the reverse link. The pilot signal transmitted by the SU of one embodiment of the invention is 6 dB lower than the power of the 32 kb/s POTS traffic channel. The reverse pilot channel is subject to APC. The reverse link pilot associated with a particular connection is called the Assigned Pilot (ASPT). In addition, there are pilot signals associated with access channels. These are called the Long Access Channel Pilots (LAXPTs). Short access channel pilots (SAXPTs) are also associated with the access channels and used for spreading code acquisition and initial power ramp-up

All pilot signals are formed from complex codes, as defined below:

$$\text{GLPT (forward)}=\{C_2\oplus C^*)+j\cdot(C_3\oplus C^*)\}\cdot\{(1)+j\cdot(0)\}$$

$$\{\text{Complex Code}\}\cdot\{\text{Carrier}\}$$

The complex pilot signals are de-spread by multiplication with conjugate spreading codes: $\{(C_2\oplus C^*)-j\cdot(C_3\oplus C^*)\}$. By contrast, traffic channels are of the form:

$$TRCH_n(\text{forward/reverse}) = \{(C_k\oplus C^*) + j\cdot (C_l\oplus C^*)\}\cdot\{(\pm 1) + j(\pm 1)\}\ \{\text{Complex Codes}\}\cdot\{\text{Data Symbol}\}$$

which thus form a constellation set at $\pi/4$ radians with respect to the pilot signal constellations.

The GLPT constellation is shown in FIG. **3***a*, and the $TRCH_n$ traffic channel constellation is shown in FIG. **3***b*.

Logical Channel Assignment of the FBCH, SBCH, and Traffic Channels

The FBCH is a global forward link channel used to broadcast dynamic information about the availability of

services and AXCHs. Messages are sent continuously over this channel, and each message lasts approximately 1 ms. The FBCH message is 16 bits long, repeated continuously, and is epoch aligned. The FBCH is formatted as defined in Table 6.

TABLE 6

PBCH format

Bit	Definition
0	Traffic Light 0
1	Traffic Light 1
2	Traffic Light 2
3	Traffic Light 3
4–7	service indicator bits
8	Traffic Light 0
9	Traffic Light 1
10	Traffic Light 2
11	Traffic Light 3
12–15	service indicator bits

For the FBCH, bit 0 is transmitted first. As used in Table 6, a traffic light corresponds to an Access Channel (AXCH) and indicates whether the particular access channel is currently in use (a red) or not in use (a green). A logic '1' indicates that the traffic light is green, and a logic '0' indicates the traffic light is red. The values of the traffic light bits may change from octet to octet, and each 16 bit message contains distinct service indicator bits which describe the types of services that are available for the AXCHs.

One embodiment of the present invention uses service indicator bits as follows to indicate the availability of services or AXCHs. The service indicator bits {4,5,6,7,12, 13,14,15} taken together may be an unsigned binary number, with bit 4 as the MSB and bit 15 as the LSB. Each service type increment has an associated nominal measure of the capacity required, and the FBCH continuously broadcasts the available capacity. This is scaled to have a maximum value equivalent to the largest single service increment possible. When an SU requires a new service or an increase in the number of bearers, it compares the capacity required to that indicated by the FBCH, and then considers itself blocked if the capacity is not available. The FBCH and the traffic channels are aligned to the epoch.

Slow Broadcast Information frames contain system or other general information that is available to all SUs and Paging Information frames contain information about call requests for particular SUs. Slow Broadcast Information frames and Paging Information frames are multiplexed together on a single logical channel which forms the Slow Broadcast Channel (SBCH). As previously defined, the code epoch is a sequence of 29 877 20 chips having an epoch duration which is a function of the chip rate defined in Table 7 below. In order to facilitate power saving, the channel is divided into N "Sleep" Cycles, and each Cycle is subdivided into M Slots, which are 19 ms long, except for 10.5 Mhz bandwidth which has slots of 18 ms.

TABLE 7

SBCH Channel Format Outline

Bandwidth (MHz)	Spreading Code Rate (MHz)	Epoch Length (ms)	Cycles/ Epoch N	Cycle Length (ms)	Slots/ Cycle M	Slot Length (ms)
7.0	5.824	5130	5	1026	54	19
10.0	8.320	3591	3	1197	63	19
10.5	8.512	3510	3	1170	65	18

TABLE 7-continued

SBCH Channel Format Outline

Bandwidth (MHz)	Spreading Code Rate (MHz)	Epoch Length (ms)	Cycles/ Epoch N	Cycle Length (ms)	Slots/ Cycle M	Slot Length (ms)
14.0	11.648	2565	3	855	45	19
15.0	12.480	2394	2	1197	63	19

Sleep Cycle Slot #1 is always used for slow broadcast information. Slots #2 to #M-1 are used for paging groups unless extended slow broadcast information is inserted. The pattern of cycles and slots in one embodiment of the present invention run continuously at 16 kb/s.

Within each Sleep Cycle the SU powers-up the receiver and re-acquires the pilot code. It then achieves carrier lock to a sufficient precision for satisfactory demodulation and Viterbi decoding. The settling time to achieve carrier lock may be up to 3 Slots in duration. For example, an SU assigned to Slot #7 powers up the Receiver at the start of Slot #4. Having monitored its Slot the SU will have either recognized its Paging Address and initiated an access request, or failed to recognize its Paging Address in which case it reverts to the Sleep mode. Table 8 shows duty cycles for the different bandwidths, assuming a wake-up duration of 3 Slots.

TABLE 8

Sleep-Cycle Power Saving

Bandwidth (MHz)	Slots/Cycle	Duty Cycle
7.0	54	7.4%
10.0	63	6.3%
10.5	65	6.2%
14.0	45	8.9%
15.0	63	6.3%

Spreading Code Tracking and AMF Detection in Multipath Channels

Spreading Code Tracking

Three CDMA spreading code tracking methods in multipath fading environments are described which track the code phase of a received multipath spread-spectrum signal. The first is the prior art tracking circuit which simply tracks the spreading code phase with the highest detector output signal value, the second is a tracking circuit that tracks the median value of the code phase of the group of multipath signals, and the third is the centroid tracking circuit which tracks the code-phase of an optimized, least mean squared weighted average of the multipath signal components. The following describes the algorithms by which the spreading code phase of the received CDMA signal is tracked.

A tracking circuit has operating characteristics that reveal the relationship between the time error and the control voltage that drives a Voltage Controlled Oscillator (VCO) of a spreading code phase tracking circuit. When there is a positive timing error, the tracking circuit generates a negative control voltage to offset the timing error. When there is a negative timing error, the tracking circuit generates a positive control voltage to offset the timing error. When the tracking circuit generates a zero value, this value corresponds to the perfect time alignment called the 'lock-point'.

FIG. **3** shows the basic tracking circuit. Received signal r(t) is applied to matched filter **301**, which correlates r(t) with a local code-sequence c(t) generated by Code Generator **303**. The output signal of the matched filter x(t) is sampled at the sampler **302** to produce samples x|nT| and x|nT+T/2|. The samples x|nT| and x|nT+T/2| are used by a tracking circuit **304** to determine if the phase of the spreading code c(t) of the code generator **303** is correct. The tracking circuit **304** produces an error signal e(t) as an input to the code generator **303**. The code generator **303** uses this signal e(t) as an input signal to adjust the code-phase it generates.

In a CDMA system, the signal transmitted by the reference user is written in the low-pass representation as

$$s(t)=\sum_{k=-\infty}^{\infty} c_k P_{Tc}(t-kT_c) \tag{7}$$

where c_k represents the spreading code coefficients, $P_{Tc}(t)$ represents the spreading code chip waveform, and T_c is the chip duration. Assuming that the reference user is not transmitting data so that only the spreading code modulates the carrier. Referring to FIG. **3***c*, the received signal is

$$r(t)=\sum_{i=1}^{M} a_i s(t-\tau_i) \tag{8}$$

Here, a_i is due to fading effect of the multipath channel on the i-th path and τ_i is the random time delay associated with the same path. The receiver passes the received signal through a matched filter, which is implemented as a correlation receiver and is described below. This operation is done in two steps: first the signal is passed through a chip matched filter and sampled to recover the spreading code chip values, then this chip sequence is correlated with the locally generated code sequence.

FIG. **3***c* shows the chip matched filter **301**, matched to the chip waveform $P_{Tc}(t)$, and the sampler **302**. Ideally, the signal x(t) at the output terminal of the chip matched filter is

$$x(t)=\sum_{i=k}^{M}\sum_{k=-\infty}^{\infty} a_i c_k g(t-\tau_i-kT_c) \tag{9}$$

where

$$g(t)=P_{Tc}(t)*h_R(t) \tag{10}$$

Here, $h_R(t)$ is the impulse response of the chip matched filter and '*' denotes convolution. The order of the summations can be rewritten as

$$x(t)=\sum_{k=-\infty}^{\infty} c_k f(t-kT_c) \tag{11}$$

where

$$f(t)=\sum_{i=1}^{M} a_i g(t-\tau_i) \tag{12}$$

In the multipath channel described above, the sampler samples the output signal of the matched filter to produce x(nT) at the maximum power level points of g(t). In practice, however, the waveform g(t) is severely distorted because of the effect of the multipath signal reception, and a perfect time alignment of the signals is not available.

When the multipath distortion in the channel is negligible and a perfect estimate of the timing is available, i.e., $a_1=1$, $\tau_1=0$, and $a_i=0$, i=2, . . . , M, the received signal is r(t)=s(t). Then, with this ideal channel model, the output of the chip matched filter becomes

$$x(t)=\sum_{k=-\infty}^{\infty} c_k g(t-kT_c) \tag{13}$$

When there is multipath fading, however, the received spreading code chip value waveform is distorted, and has a number of local maxima that can change from one sampling interval to another depending on the channel characteristics.

For multipath fading channels with quickly changing channel characteristics, it is not practical to try to locate the maximum of the waveform f(t) in every chip period interval. Instead, a time reference may be obtained from the characteristics of f(t) that may not change as quickly. Three tracking methods are described based on different characteristics of f(t).

Prior Art Spreading Code Tracking Method:

Prior art tracking methods include a code tracking circuit in which the receiver attempts to determine the timing of the maximum matched filter output value of the chip waveform occurs and sample the signal accordingly. However, in multipath fading channels, the receiver despread code waveform can have a number of local maxima, especially in a mobile environment. In the following, f(t) represents the received signal waveform of the spreading code chip convolved with the channel impulse response. The frequency response characteristic of f(t) and the maximum of this characteristic can change rather quickly making it impractical to track the maximum of f(t).

Define τ to be the time estimate that the tracking circuit calculates during a particular sampling interval. Also, define the following error function

$$\epsilon=\begin{cases}\displaystyle\int_{\{t:\,|t-\tau|>\delta\}} f(t)dt, & |t-\tau|>\delta\\ \epsilon=0 & |t-\tau|<\delta\end{cases} \tag{14}$$

The tracking circuits of the prior art calculate a value of the input signal that minimizes the error ϵ. One can write

$$\min\epsilon=1-\max_{\tau}\int_{\tau-\delta}^{\tau+\delta} f(t)dt \tag{15}$$

Assuming $f(\tau)$ has a smooth shape in the values given, the value of τ for which $f(\tau)$ is maximum minimizes the error ϵ, so the tracking circuit tracks the maximum point of f(t).

Median Weighted Value Tracking Method:

The Median Weighted Tracking Method of one embodiment of the present invention, minimizes the absolute weighted error, defined as

$$\epsilon=\int_{-\infty}^{\infty}|t-\tau|f(t)dt \tag{16}$$

This tracking method calculates the 'median' signal value of f(t) by collecting information from all paths, where $f(\tau)$ is as in equation 12. In a multipath fading environment, the waveform f(t) can have multiple local maxima, but only one median.

To minimize ϵ, take the derivative of equation (16) is taken with respect to τ and the result is equated to zero, which gives

$$\int_{-\infty}^{\tau} f(t)dt = \int_{\tau}^{\infty} f(t)dt \quad (17)$$

The value of τ that satisfies (17) is called the 'median' of f(t). Therefore, the Median Tracking Method of the present embodiment tracks the median of f(t). FIG. **4** shows an implementation of the tracking circuit based on minimizing the absolute weighted error defined above. The signal x(t) and its one-half chip offset version x(t+T/2) are sampled by the A/D **401** at a rate 1/T. The following equation determines the operating characteristic of the circuit in FIG. **4**:

$$\epsilon(\tau) = \sum_{n=1}^{2L} |f(\tau - nT/2)| - |f(\tau + nT/2)| \quad (18)$$

Tracking the median of a group of multipath signals keeps the received energy of the multipath signal components substantially equal on the early and late sides of the median point of the correct locally generated spreading code phase c_n. The tracking circuit consists of an A/D **401** which samples an input signal x(t) to form the half-chip offset samples. The half chip offset samples are alternatively grouped into even samples called an early set of samples x(nT+τ) and odd samples called a late set of samples x(nT+(T/2)+τ). The first correlation bank adaptive matched filter **402** multiplies each early sample by the spreading code phases c(n+1), c(n+2), . . . , c(n+L), where L is small compared to the code length and approximately equal to number of chips of delay between the earliest and latest multipath signal. The output of each correlator is applied to a respective first sum-and-dump bank **404**. The magnitudes of the output values of the L sum-and-dumps are calculated in the calculator **406** and then summed in summer **408** to give an output value proportional to the signal energy in the early multipath signals. Similarly, a second correlation bank adaptive matched filter **403** operates on the late samples, using code phases c(n−1), c(n−2), . . . , c(n−L), and each output signal is applied to a respective sum-and-dump circuit in an integrator **405**. The magnitudes of the L sum-and-dump output signals are calculated in calculator **407** and then summed in summer **409** to give a value for the late multipath signal energy. Finally, the subtractor **410** calculates the difference and produces error signal ε(t) of the early and late signal energy values.

The tracking circuit adjusts by means of error signal ε(τ) the locally generated code phases c(t) to cause the difference between the early and late values to tend toward 0.

Centroid Tracking Method

The optimal spreading code tracking circuit of one embodiment of the present invention is called the squared weighted tracking (or centroid) circuit. Defining τ to denote the time estimate that the tracking circuit calculates, based on some characteristic of f(t), the centroid tracking circuit minimizes the squared weighted error defined as

$$\epsilon = \int_{-\infty}^{\infty} |t-\tau|^2 f(t)dt \quad (19)$$

This function inside the integral has a quadratic form, which has a unique minimum. The value of τ that minimizes ε can be found by taking the derivative of the above equation with respect to τ and equating to zero, which gives

$$\int_{-\infty}^{\infty} (-2t + 2\tau) f(t)dt = 0 \quad (20)$$

Therefore, the value of τ that satisfies equation (21)

$$\tau - \frac{1}{\beta}\int_{-\infty}^{\infty} t f(t)dt = 0 \quad (21)$$

is the timing estimate that the tracking circuit calculates, where β is a constant value.

Based on these observations, a realization of an exemplary tracking circuit which minimizes the squared weighted error is shown in FIG. **5***a*. The following equation determines the error signal ε(τ) of the centroid tracking circuit:

$$\epsilon(\tau) = \sum_{n=1}^{2L} n[|f(\tau - nT/2)| - |f(\tau + nT/2)|] = 0 \quad (22)$$

The value that satisfies ε(τ)=0 is the perfect estimate of the timing.

The early and late multipath signal energy on each side of the centroid point are equal. The centroid tracking circuit shown in FIG. **5***a* consists of an A/D converter **501** which samples an input signal x(t) to form the half-chip offset samples. The half chip offset samples are alternatively grouped as an early set of samples x(nT+τ) and a late set of samples x(nT+(T/2)+τ). The first correlation bank adaptive matched filter **502** multiplies each early sample and each late sample by the positive spreading code phases c(n+1), c(n+2), . . . , c(n+L), where L is small compared to the code length and approximately equal to number of chips of delay between the earliest and latest multipath signal. The output signal of each correlator is applied to a respective one of L sum-and-dump circuits of the first sum and dump bank **504**. The magnitude value of each sum-and-dump circuit of the sum and dump bank **504** is calculated by the respective calculator in the calculator bank **506** and applied to a corresponding weighting amplifier of the first weighting bank **508**. The output signal of each weighting amplifier represents the weighted signal energy in a multipath component signal.

The weighted early multipath signal energy values are summed in sample adder **510** to give an output value proportional to the signal energy in the group of multipath signals corresponding to positive code phases which are the early multipath signals. Similarly, a second correlation bank adaptive matched filter **503** operates on the early and late samples, using the negative spreading code phases c(n−1), c(n−2), . . . , c(n−L); each output signal is provided to a respective sum-and-dump circuit of discrete integrator **505**. The magnitude value of the L sum-and-dump output signals are calculated by the respective calculator of calculator bank **507** and then weighted in weighting bank **509**. The weighted late multipath signal energy values are summed in sample adder **511** to give an energy value for the group of multipath signals corresponding to the negative code phases which are the late multipath signals. Finally, the adder **512** calculates the difference of the early and late signal energy values to produce error sample value ετ).

The tracking circuit of FIG. **5***a* produces error signal ε(τ) which is used to adjust the locally generated code phase c(nT) to keep the weighted average energy in the early and late multipath signal groups equal. The embodiment shown uses weighting values that increase as the distance from the centroid increases. The signal energy in the earliest and latest multipath signals is probably less than the multipath

signal values near the centroid. Consequently, the difference calculated by the adder **510** is more sensitive to variations in delay of the earliest and latest multipath signals.

Quadratic Detector for Tracking

In the new embodiment of the tracking method, the tracking circuit adjusts sampling phase to be "optimal" and robust to multipath. Let f(t) represent the received signal waveform as in equation 12 above. The particular method of optimizing starts with a delay locked loop with an error signal $\epsilon(\tau)$ that drives the loop. The function $\epsilon(\tau)$ must have only one zero at $\tau=\tau_0$ where τ_0 is optimal. The optimal form for $\epsilon(\tau)$ has the canonical form:

$$\epsilon(\tau)=\int_{-\infty}^{\infty} w(t,\tau)|f(t)|^2 dt \tag{23}$$

where $w(t,\tau)$ is a weighting function relating f(t) to the error $\epsilon(\tau)$, and the relationship indicated by equation (24) also holds

$$\epsilon(\tau+\tau_0)=\int_{-\infty}^{\infty} w(t,\tau+\tau_0)|f(t)|^2 dt \tag{24}$$

It follows from equation (24) that $w(t,\tau)$ is equivalent to $w(t-\tau)$. Considering the slope M of the error signal in the neighborhood of a lock point τ_0:

$$M=\frac{d\epsilon(\tau)}{d\tau}\Big|_{\tau_0}=-\int_{-\infty}^{\infty} w'(t-\tau_0)g(t)dt \tag{25}$$

where $w'(t,\tau)$ is the derivative of $w(t,\tau)$ with respect to τ, and g(t) is the average of $|f(t)|^2$.

The error $\epsilon(\tau)$ has a deterministic part and a noise part. Let z denote the noise component in $\epsilon(\tau)$, then $|z|^2$ is the average noise power in the error function $\epsilon(\tau)$. Consequently, the optimal tracking circuit maximizes the ratio

$$F=\frac{M^2}{|z|^2} \tag{26}$$

The implementation of the Quadratic Detector is now described. The discrete error value e of an error signal $\epsilon(\tau)$ is generated by performing the operation

$$e=y^T B y \tag{27}$$

where the vector y represents the received signal components yi, i=0, 1, . . . L−1, as shown in FIG. **5***b*. The matrix B is an L by L matrix and the elements are determined by calculating values such that the ratio F of equation (26) is maximized.

The Quadratic Detector described above may be used to implement the centroid tracking system described above with reference to FIG. **5***a*. For this implementation, the vector y is the output signal of the sum and dump circuits **504**:

$$y=\{f(\tau-LT), f(\tau-LT+T/2), f(\tau-(L-1)T), \ldots f(\tau), f(\tau+T/2), f(\tau+T), \ldots f(\tau+LT)\}$$

and the matrix B is set forth in table 9.

TABLE 9

B matrix for quadratic form of Centroid Tracking System

L	0	0	0	0	0	0	0	0	0	0
0	L − ½	0	0	0	0	0	0	0	0	0
0	0	L − 1	0	0	0	0	0	0	0	0
.	.	.	.	.	.	.	.	.	.	.
.	.	.	.	.	.	.	.	.	.	.
.	.	.	.	.	.	.	.	.	.	.
0	0	0	0	½	0	0	0	0	0	0
0	0	0	0	0	0	0	0	0	0	0
0	0	0	0	0	0	−½	0	0	0	0
.	.	.	.	.	.	.	.	.	.	.
.	.	.	.	.	.	.	.	.	.	.
.	.	.	.	.	.	.	.	.	.	.
0	0	0	0	0	0	0	0	−L + 1	0	0
0	0	0	0	0	0	0	0	0	−L + ½	0
0	0	0	0	0	0	0	0	0	0	−L

Determining the Minimum Value of L needed:

The value of L in the previous section determines the minimum number of correlators and sum-and-dump elements. L is chosen as small as possible without compromising the functionality of the tracking circuit.

The multipath characteristic of the channel is such that the received chip waveform f(t) is spread over QT_c seconds, or the multipath components occupy a time period of Q chips duration. The value of L chosen is L=Q. Q is found by measuring the particular RF channel transmission characteristics to determine the earliest and latest multipath component signal propagation delay. QT_c is the difference between the earliest and latest multipath component arrival time at a receiver.

Adaptive Vector Correlator

An embodiment of the present invention uses an adaptive vector correlator (AVC) to estimate the channel impulse response and to obtain a reference value for coherent combining of received multipath signal components. The described embodiment employs an array of correlators to estimate the complex channel response affecting each multipath component. The receiver compensates for the channel response and coherently combines the received multipath signal components. This approach is referred to as maximal ratio combining.

Referring to FIG. **6**, the input signal x(t) to the system includes interference noise of other message channels, multipath signals of the message channels, thermal noise, and multipath signals of the pilot signal. The signal is provided to AVC **601** which, in the exemplary embodiment, includes a despreading means **602**, channel estimation means for estimating the channel response **604**, correction means for correcting a signal for effects of the channel response **603**, and adder **605**. The AVC despreading means **602** is composed of multiple code correlators, with each correlator using a different phase of the pilot code c(t) provided by the pilot code generator **608**. The output signal of this despreading means corresponds to a noise power level if the local pilot code of the despreading means is not in phase with the input code signal. Alternatively, it corresponds to a received pilot signal power level plus noise power level if the phases of the input pilot code and locally generated pilot code are the same. The output signals of the correlators of the despreading means are corrected for the channel response by the correction means **603** and are applied to the adder **605** which collects all multipath pilot signal power. The channel response estimation means **604** receives the combined pilot

signal and the output signals of the despreading means **602**, and provides a channel response estimate signal, w(t), to the correction means **603** of the AVC, and the estimate signal w(t) is also available to the adaptive matched filter (AMF) described below. The output signal of the despreading means **602** is also provided to the acquisition decision means **606** which decides, based on a particular algorithm such as a sequential probability ratio test (SPRT), if the present output levels of the despreading circuits correspond to synchronization of the locally generated code to the desired input code phase. If the detector finds no synchronization, then the acquisition decision means sends a control signal a(t) to the local pilot code generator **608** to offset its phase by one or more chip period. When synchronization is found, the acquisition decision means informs tracking circuit **607**, which achieves and maintains a close synchronization between the received and locally generated code sequences.

An exemplary implementation of the Pilot AVC used to despread the pilot spreading code is shown in FIG. **7**. The described embodiment assumes that the input signal x(t) has been sampled with sampling period T to form samples x(nT+τ), and is composed of interference noise of other message channels, multipath signals of message channels, thermal noise, and multipath signals of the pilot code. The signal x(nT+τ) is applied to L correlators, where L is the number of code phases over which the uncertainty within the multipath signals exists. Each correlator **701**, **702**, **703** comprises a multiplier **704**, **705**, **706**, which multiples the input signal with a particular phase of the Pilot spreading code signal c((n+i)T), and sum-and-dump circuits **708**, **709**, **710**. The output signal of each multiplier **704**, **705**, **706** is applied to a respective sum-and dump circuit **708**, **709**, **710** to perform discrete integration. Before summing the signal energy contained in the to outputs of the correlators, the AVC compensates for the channel response and the carrier phase rotation of the different multipath signals. Each output of each sum-and-dump **708**, **709**, **710** is multiplied with a derotation phaser [complex conjugate of ep(nT)] from digital phase lock loop (DPLL) **721** by the respective multiplier **714**, **715**, **716** to account for the phase and frequency offset of the carrier signal. The Pilot Rake AMF calculates the weighting factors wk, k=1, . . . , L, for each multipath signal by passing the output of each multiplier **714**, **715**, **716** through a low pass filter (LPF) **711**, **712**, **713**. Each despread multipath signal is multiplied by its corresponding weighting factor in a respective multiplier **717**, **718**, **719**. The output signals of the multipliers **717**, **718**, **719** are summed in a master adder **720**, and the output signal p(nT) of the accumulator **720** consists of the combined despread multipath pilot signals in noise. The output signal p(nT) is also input to the DPLL **721** to produce the error signal ep(nT) for tracking of the carrier phase.

FIGS. **8***a* and **8***b* show alternate embodiments of the AVC which can be used for detection and multipath signal component combining. The message signal AVCs of FIGS. **8***a* and **8***b* use the weighting factors produced by the Pilot AVC to correct the message data multipath signals. The spreading code signal, c(nT) is the spreading code spreading sequence used by a particular message channel and is synchronous with the pilot spreading code signal. The value L is the number of correlators in the AVC circuit.

The circuit of FIG. **8***a* calculates the decision variable Z which is given by

$$Z = w_1 \sum_{i=1}^{N} x(iT+\tau)c(iT) + w_2 \sum_{i=1}^{N} x(iT+\tau)c((i+1)T) + \quad (28)$$

$$\ldots + w_L \sum_{i=1}^{L} x(iT+\tau) + c((i+L)T)$$

where N is the number of chips in the correlation window. Equivalently, the decision statistic is given by

$$Z = x(T+\tau) \sum_{i=1}^{L} w_i c(iT) + x(2T+\tau) \sum_{i=1}^{L} w_i c((i+1)T) + \quad (29)$$

$$\ldots + x(NT+\tau) \sum_{i=1}^{L} w_N c((i+N)T) = \sum_{k=1}^{N} x(kT-\tau) \sum_{i=1}^{L} w_k c((i+k-1)T)$$

The alternative implementation that results from equation (29) is shown in FIG. **8***b*.

Referring to FIG. **8***a*, the input signal x(t) is sampled to form x(nT+τ), and is composed of interference noise of other message channels, multipath signals of message channels, thermal noise, and multipath signals of the pilot code. The signal x(nT+τ) is applied to L correlators, where L is the number of code phases over which the uncertainty within the multipath signals exists. Each correlator **801**, **802**, **803** comprises a multiplier **804**, **805**, **806**, which multiples the input signal by a particular phase of the message channel spreading code signal, and a respective sum-and-dump circuit **808**, **809**, **810**. The output signal of each multiplier **804**, **805**, **806** is applied to a respective sum-and dump circuit **808**, **809**, **810** which performs discrete integration. Before summing the signal energy contained in the output signals of the correlators, the AVC compensates for the different multipath signals. Each despread multipath signal and its corresponding weighting factor, which is obtained from the corresponding multipath weighting factor of the pilot AVC, are multiplied in a respective multiplier **817**, **818**, **819**. The output signals of multipliers **817**, **818**, **819** are summed in a master adder **820**, and the output signal z(nT of the accumulator **820** consists of sampled levels of a despread message signal in noise.

The alternative embodiment of the invention includes a new implementation of the AVC despreading circuit for the message channels which performs the sum-and-dump for each multipath signal component simultaneously. The advantage of this circuit is that only one sum-and dump circuit and one adder is necessary. Referring to FIG. **8***b*, the message code sequence generator **830** provides a message code sequence to shift register **831** of length L. The output signal of each register **832**, **833**, **834**, **835** of the shift register **831** corresponds to the message code sequence shifted in phase by one chip. The output value of each register **832**, **833**, **834**, **835** is multiplied in multipliers **836**, **837**, **838**, **839** with the corresponding weighting factor w_k, k=1, . . . , L obtained from the Pilot AVC. The output signals of the L multipliers **836**, **837**, **838**, **839** are summed by the adding circuit **840**. The adding circuit output signal and the receiver input signal x(nT +τ) are then multiplied in the multiplier **841** and integrated by the sum-and-dump circuit **842** to produce message signal z(nT).

A third embodiment of the adaptive vector correlator is shown in FIG. **8***c*. The embodiment shown uses the least mean square (LMS) statistic to implement the vector correlator and determines the derotation factors for each multipath component from the received multipath signal. The AVC of FIG. **8***c* is similar to the exemplary implementation of the Pilot AVC used to despread the pilot spreading code shown in FIG. **7**. The digital phase locked loop **721** is

replaced by the phase locked loop **850** having voltage controlled oscillator **851**, loop filter **852**, limiter **853**, and imaginary component separator **854**. The difference between the corrected despread output signal dos and an ideal despread output signal is provided by adder **855**, and the difference signal is a despread error value ide which is further used by the derotation circuits to compensate for errors in the derotation factors.

In a multipath signal environment, the signal energy of a transmitted symbol is spread out over the multipath signal components. The advantage of multipath signal addition is that a substantial portion of signal energy is recovered in an output signal from the AVC. Consequently, a detection circuit has an input signal from the AVC with a higher signal-to-noise ratio (SNR), and so can detect the presence of a symbol with a lower bit-error ratio (BER). In addition, measuring the output of the AVC is a good indication of the transmit power of the transmitter, and a good measure of the system's interference noise.

Adaptive Matched Filter

One embodiment of the current invention includes an Adaptive Matched Filter (AMF) to optimally combine the multipath signal components in a received spread spectrum message signal. The AMF is a tapped delay line which holds shifted values of the sampled message signal and combines these after correcting for the channel response. The correction for the channel response is done using the channel response estimate calculated in the AVC which operates on the Pilot sequence signal. The output signal of the AMF is the combination of the multipath components which are summed to give a maximum value. This combination corrects for the distortion of multipath signal reception. The various message despreading circuits operate on this combined multipath component signal from the AMF.

FIG. **8***d* shows an exemplary embodiment of the AMF. The sampled signal from the A/D converter **870** is applied to the L-stage delay line **872**. Each stage of this delay line **872** holds the signal corresponding to a different multipath signal component. Correction for the channel response is applied to each delayed signal component by multiplying the component in the respective multiplier of multiplier bank **874** with the respective weighting factor $w_1, w_2, \ldots, W_L$ from the AVC corresponding to the delayed signal component. All weighted signal components are summed in the adder **876** to give the combined multipath component signal y(t).

The combined multipath component signal y(t) does not include the correction due to phase and frequency offset of the carrier signal. The correction for the phase and frequency offset of the carrier signal is made to y(t) by multiplying y(t) with carrier phase and frequency correction (derotation phasor) in multiplier **878**. The phase and frequency correction is produced by the AVC as described previously. FIG. **8***d* shows the correction as being applied before the despreading circuits **880**, but alternate embodiments of the invention can apply the correction after the despreading circuits.

Method to Reduce Re-Acquisition Time with Virtual Location

One consequence of determining the difference in code phase between the locally generated pilot code sequence and a received spreading code sequence is that an approximate value for the distance between the base station and a subscriber unit can be calculated. If the SU has a relatively fixed position with respect to the RCS of the base station, the uncertainty of received spreading code phase is reduced for subsequent attempts at re-acquisition by the SU or RCS. The time required for the base station to acquire the access signal of a SU that has gone "off-hook" contributes to the delay between the SU going off-hook and the receipt of a dial tone from the PSTN. For systems that require a short delay, such as 150 msec for dial tone after off-hook is detected, a method which reduces the acquisition and bearer channel establishment time is desirable. One embodiment of the present invention uses such a method of reducing re-acquisition by use of virtual locating. Additional details of this technique are described in U.S. patent application entitled "VIRTUAL LOCATING OF A FIXED SUBSCRIBER UNIT TO REDUCE RE-ACQUISITION TIME" filed on even date herewith and incorporated herein by reference.

The RCS acquires the SU CDMA signal by searching only those received code phases corresponding to the largest propagation delay of the particular system. In other words, the RCS assumes that all SUs are at a predetermined, fixed distance from the RCS. The first time the SU establishes a channel with the RCS, the normal search pattern is performed by the RCS to acquire the access channel. The normal method starts by searching the code phases corresponding to the longest possible delay, and gradually adjusts the search to the code phases with the shortest possible delay. However, after the initial acquisition, the SU can calculate the delay between the RCS and the SU by measuring the time difference between sending a short access message to the RCS and receiving an acknowledgment message, and using the received Global Pilot channel as a timing reference. The SU can also receive the delay value by having the RCS calculate the round trip delay difference from the code phase difference between the Global Pilot code generated at the RCS and the received assigned pilot sequence from the SU, and then sending the SU the value on a predetermined control channel. Once the round trip delay is known to the SU, the SU may adjust the code phase of the locally generated assigned pilot and spreading code sequences by adding the delay required to make the SU appear to the RCS to be at the predetermined fixed distance from the RCS. Although the method is explained for the largest delay, a delay corresponding to any predetermined location in the system can be used.

A second advantage of the method of reducing re-acquisition by virtual locating is that a conservation in SU power use can be achieved. Note that a SU that is "powered down" or in a sleep mode needs to start the bearer channel acquisition process with a low transmit power level and ramp-up power until the RCS can receive its signal in order to minimize interference with other users. Since the subsequent re-acquisition time is shorter, and because the SU's location is relatively fixed in relation to the RCS, the SU can ramp-up transmit power more quickly because the SU will wait a shorter period of time before increasing transmit power. The SU waits a shorter period because it knows, within a small error range, when it should receive a response from the RCS if the RCS has acquired the SU signal.

The Spread Spectrum Communication System

The Radio Carrier Station (RCS)

The Radio Carrier Station (RCS) of the present invention acts as a central interface between the SU and the remote processing control network element, such as a Radio Distribution Unit (RDU). The interface to the RDU of the present embodiment follows the G.704 standard and an interface according to a modified version of DECT V5.1, but

the present invention can support any interface that can exchange call control and traffic channels. The RCS receives information channels from the RDU including call control data, and traffic channel data such as, but not limited to, 32 kb/s ADPCM, 64 kb/s PCM, and ISDN, as well as system configuration and maintenance data. The RCS also terminates the CDMA radio interface bearer channels with SUs, which channels include both control data, and traffic channel data. In response to the call control data from either the RDU or a SU, the RCS allocates traffic channels to bearer channels on the RF communication link and establishes a communication connection between the SU and the telephone network through an RDU.

As shown in FIG. **9**, the RCS receives call control and message information data into the MUXs **905**, **906** and **907** through interface lines **901**, **902** and **903**. Although E1 format is shown, other similar telecommunication formats can be supported in the same manner as described below. The MUXs shown in FIG. **9** may be implemented using circuits similar to that shown in FIG. **10**. The MUX shown in FIG. **10** includes system clock signal generator **1001** consisting of phase locked oscillators (not shown) which generate clock signals for the Line PCM highway **1002** (which is part of PCM Highway **910**), and high speed bus (HSB) **970**; and the MUX Controller **1010** which synchronizes the system clock **1001** to interface line **1004**. It is contemplated that the phase lock oscillators can provide timing signals for the RCS in the absence of synchronization to a line. The MUX Line Interface **1011** separates the call control data from the message information data. Referring to FIG. **9**, each MUX provides a connection to the Wireless Access Controller (WAC) **920** through the PCM highway **910**. The MUX controller **1010** also monitors the presence of different tones present in the information signal by means of tone detector **1030**.

Additionally, the MUX Controller **1010** provides the ISDN D channel network signaling locally to the RDU. The MUX line interface **1011**, such as a FALC **54**, includes an El interface **1012** which consists of a transmit connection pair (not shown) and a receive connection pair (not shown) of the MUX connected to the RDU or Central Office (CO) ISDN Switch at the data rate of 2.048 Mbps. The transmit and receive connection pairs are connected to the E1 interface **1012** which translates differential tri-level transmit/receive encoded pairs into levels for use by the Framer **1015**. The line interface **1011** uses internal phase-locked-loops (not shown) to produce E1-derived 2.048 MHz, and 4.096 MHz clocks as well as an 8 KHz frame-sync pulse. The line interface can operate in clock-master or clock-slave mode. While the exemplary embodiment is shown as using an E1 Interface, it is contemplated that other types of telephone lines which convey multiple calls may be used, for example, T1 lines or lines which interface to a Private Branch Exchange (PBX).

The line interface framer **1015** frames the data streams by recognizing the framing patterns on channel-1 (time-slot **0**) of the incoming line, and inserts and extracts service bits, generates/checks line service quality information.

As long as a valid E1 signal appears at the E1 Interface **1012**, the FALC **54**, recovers a 2.048 MHz PCM clock signal from the E1 line. This clock, via System Clock **1001**, is used system wide as a PCM Highway Clock signal. If the E1 Line fails, the FALC **54** continues to deliver a PCM Clock derived from an oscillator signal o(t) connected to the sync input (not shown) of the FALC **54**. This PCM Clock serves the RCS system until another MUX with an operational E1 line assumes responsibility for generating the system clock signals.

The framer **1015** generates a Received Frame Sync Pulse, which in turn can be used to trigger the PCM Interface **1016** to transfer data onto the line PCM Highway **1002** and into the RCS System for use by other elements. Since all E1 lines are frame synchronized, all Line PCM Highways are also frame synchronized. From this 8 kHz PCM Sync pulse, the system clock signal generator **1001** of the MUX uses a Phase Locked Loop (not shown) to synthesize the PN×2 clock [e.g., 15.96 MHz)(W_0(t)]. The frequency of this clock signal is different for different transmission bandwidths, as described in Table 7.

The MUX includes a MUX Controller **1010**, such as a 25 MHz Quad Integrated Communications Controller, containing a microprocessor **1020**, program memory **1021**, and Time Division Multiplexer (TDM) **1022**. The TDM **1022** is coupled to receive the signal provided by the Framer **1015**, and extracts information placed in time slots **0** and **16**. The extracted information governs how the MUX controller **1010** processes the Link Access Protocol-D (LAPD) data link. The call control and bearer modification messages, such as those defined as V5.1 Network layer messages, are either passed to the WAC, or used locally by the MUX controller **1010**.

The RCS Line PCM Highway **1002** is connected to and originates with the Framer **1015** through PCM Interface **1016**, and comprises of a 2.048 MHz stream of data in both the transmit and receive direction. The RCS also contains a High Speed Bus (HSB) **970** which is the communication link between the MUX, WAC, to and MIUs. The HSB **970** supports a data rate of, for example, 100 Mbit/sec. Each of the MUX, WAC, and MIU access the HSB using arbitration. The RCS of the present invention also can include several MUXs requiring one board to be a "master" and the rest "slaves". Details on the implementation of the HSB may be found in a U.S. patent application entitled PARALLEL PACKETIZED INTERMODULE ARBITRATED HIGH SPEED CONTROL AND DATA BUS, filed on even date herewith, which is hereby incorporated by reference.

Referring to FIG. **9**, the Wireless Access Controller (WAC) **920** is the RCS system controller which manages call control functions and interconnection of data streams between the MUXs **905**, **906**, **907**, Modem Interface Units (MIUs) **931**, **932**, **933**. The WAC **920** also controls and monitors other RCS elements such as the VDC **940**, RF **950**, and Power Amplifiers **960**. The WAC **920** as shown in FIG. **11**, allocates bearer channels to the modems on each MIU **931**, **932**, **933** and allocates the message data on line PCM Highway **910** from the MUXs **905**, **906**, **907** to the modems on the MIUs **931**, **932**, **933**. This allocation is made through the System PCM Highway **911** by means of a time slot interchange on the WAC **920**. If more than one WAC is present for redundancy purposes, the WACs determines the Master-Slave relationship with a second WAC. The WAC **920** also generates messages and paging information responsive to call control signals from the MUXs **905**, **906**, **907** received from a remote processor, such as an RDU; generates Broadcast Data which is transmitted to the MIU master modem **934**; and controls the generation by the MIU MM **934** of the Global system Pilot spreading code sequence. The WAC **920** also is connected to an external Network Manager (NM) **980** for craftperson or user access.

Referring to FIG. **11**, the WAC includes a time-slot interchanger (TSI) **1101** which transfers information from one time slot in a Line PCM Highway or System PCM Highway to another time slot in either the same or different Line PCM Highway or System PCM Highway. The TSI **1101** is connected to the WAC controller **1111** of FIG. **11**

which controls the assignment or transfer of information from one time slot to another time slot and stores this information in memory **1120**. The exemplary embodiment of the invention has four PCM Highways **1102**, **1103**, **1104**, **1105** connected to the TSI. The WAC also is connected to the HSB **970**, through which WAC communicates to a second WAC (not shown), to the MUXs and to the MIUs.

Referring to FIG. **11**, the WAC **920** includes a WAC controller **1111** employing, for example, a microprocessor **1112**, such as a Motorola MC68040 and a communications processor **1113**, such as the Motorola MC68360 QUICC communications processor, and a clock oscillator **1114** which receives a clock synch signal wo(t) from the system clock generator. The clock generator is located on a MUX (not shown) to provide timing to the WAC controller **1111**. The WAC controller **1111** also includes memory **1120** including Flash Prom **1121** and SRAM memory **1122**. The Flash Prom **1121** contains the program code for the WAC controller **1111**, and is reprogrammable for new software programs downloaded from an external source. The SRAM **1122** is provided to contain the temporary data written to and read from memory **1120** by the WAC controller **1111**.

A low speed bus **912** is connected to the WAC **920** for transferring control and status signals between the RF Transmitter/Receiver **950**, VDC **940**, RF **950** and Power Amplifier **960** as shown in FIG. **9**. The control signals are sent from the WAC **920** to enable or disable the RF Transmitters/Receiver **950** or Power amplifier **960**, and the status signals are sent from the RF Transmitters/Receiver **950** or Power amplifier **960** to monitor the presence of a fault condition.

Referring to FIG. **9**, the exemplary RCS contains at least one MIU **931**, which is shown in FIG. **12** and now described in detail. The MIU of the exemplary embodiment includes six CDMA modems, but the invention is not limited to this number of modems. The MIU includes a System PCM Highway **1201** connected to each of the CDMA Modems **1210**, **1211**, **1212**, **1215** through a PCM Interface **1220**, a Control Channel Bus **1221** connected to MIU controller **1230** and each of the CDMA Modems **1210**, **1211**, **1212**, **1213**, an MIU clock signal generator (CLK) **1231**, and a modem output combiner **1232**. The MIU provides the RCS with the following functions: the MIU controller receives CDMA Channel Assignment Instructions from the WAC and assigns a modem to a user information signal which is applied to the line interface of the MUX and a modem to receive the CDMA channel from the SU; it also combines the CDMA Transmit Modem Data for each of the MIU CDMA modems; multiplexes I and Q transmit message data from the CDMA modems for transmission to the VDC; receives Analog I and Q receive message data from the VDC; distributes the I and Q data to the CDMA modems; transmits and receives digital AGC Data; distributes the AGC data to the CDMA modems; and sends MIU Board Status and Maintenance Information to the WAC **920**.

The MIU controller **1230** of the exemplary embodiment of the present invention contains one communication microprocessor **1240**, such as the MC68360 "QUICC" Processor, and includes a memory **1242** having a Flash Prom memory **1243** and a SRAM memory **1244**. Flash Prom **1243** is provided to contain the program code for the Microprocessors **1240**, and the memory **1243** is downloadable and reprogrammable to support new program versions. SRAM **1244** is provided to contain the temporary data space needed by the MC68360 Microprocessor **1240** when the MIU controller **1230** reads or writes data to memory The MIU CLK circuit **1231** provides a timing signal to the MIU controller **1230**, and also provides a timing signal to the CDMA modems. The MIU CLK circuit **1231** receives and is synchronized to the system clock signal wo(t). The controller clock signal generator **1213** also receives and synchronizes to the spreading code clock signal pn(t) which is distributed to the CDMA moderns **1210**, **1211**, **1212**, **1215** from the MUX.

The RCS of the present embodiment includes a System Modem **1210** contained on one MIU. The System Modem **1210** includes a Broadcast spreader (not shown) and a Pilot Generator (not shown). The Broadcast Modem provides the broadcast information used by the exemplary system, and the broadcast message data is transferred from the MIU controller **1230** to the System Modem **1210**. The System Modem also includes four additional modems (not shown) which are used to transmit the signals CT1 through CT4 and AX1 through AX4. The System Modem **1210** provides unweighted I and Q Broadcast message data signals which are applied to the VDC. The VDC adds the Broadcast message data signal to the MIU CDMA Modem Transmit Data of all CDMA modems **1210**, **1211**, **1212**, **1215**, and the Global Pilot signal.

The Pilot Generator (PG) **1250** provides the Global Pilot signal which is used by the present invention, and the Global Pilot signal is provided to the CDMA modems **1210**, **1211**, **1212**, **1215** by the MIU controller **1230**. However, other embodiments of the present invention do not require the MIU controller to generate the Global Pilot signal, but include a Global Pilot signal generated by any form of CDMA Code Sequence generator. In the described embodiment of the invention, the unweighted I and Q Global Pilot signal is also sent to the VDC where it is assigned a weight, and added to the MIU CDMA Modem transmit data and Broadcast message data signal.

System timing in the RCS is derived from the E1 interface. There are four MUXs in an RCS, three of which (**905**, **906** and **907**) are shown in FIG. **9**. Two MUXs are located on each chassis. One of the two MUXs on each chassis is designated as the master, and one of the masters is designated as the system master. The MUX which is the system master derives a 2.048 Mhz PCM clock signal from the E1 interface using a phase locked loop (not shown). In turn, the system master MUX divides the 2.048 Mhz PCM clock signal in frequency by 16 to derive a 128 KHz reference clock signal. The 128 KHz reference clock signal is distributed from the MUX that is the system master to all the other MUXs. In turn, each MUX multiplies the 128 KHz reference clock signal in frequency to synthesize the system clock signal which has a frequency that is twice the frequency of the PN-clock signal. The MUX also divides the 128 KHz clock signal in frequency by 16 to generate the 8 KHz frame synch signal which is distributed to the MIUs. The system clock signal for the exemplary embodiment has a frequency of 11.648 Mhz for a 7 MHz bandwidth CDMA channel Each MUX also divides the system clock signal in frequency by 2 to obtain the PN-clock signal and further divides the PN-clock signal in frequency by 29 877 120 (the PN sequence length) to generate the PN-synch signal which indicates the epoch boundaries. The PN-synch signal from the system master MUX is also distributed to all MUXs to maintain phase alignment of the internally generated clock signals for each MUX. The PN-synch signal and the frame synch signal are aligned. The two MUXs that are designated as the master MUXs for each chasis then distribute both the system clock signal and the PN-clock signal to the MIUs and the VDC.

The PCM Highway Interface **1220** connects the System PCM Highway **911** to each CDMA Modem **1210**, **1211**,

1212, 1215. The WAC controller transmits Modem Control information, including traffic message control signals for each respective user information signal, to the MIU controller 1230 through the HSB 970. Each CDMA Modem 1210, 1211, 1212, 1215 receives a traffic message control signal, which includes signaling information, from the MIU controller 1111. Traffic message control signals also include call control (CC) information and spreading code and despreading code sequence information.

The MIU also includes the Transmit Data Combiner 1232 which adds weighted CDMA modem transmit data including In-phase (I) and Quadrature (Q) modem transmit data from the CDMA modems 1210, 1211, 1212, 1215 on the MIU. The I modem transmit data is added separately from the Q modem transmit data. The combined I and Q modem transmit data output signal of the Transmit Data Combiner 1232 is applied to the I and Q multiplexer 1233 that creates a single CDMA transmit message channel composed of the I and Q modem transmit data multiplexed into a digital data stream.

The Receiver Data Input Circuit (RDI) 1234 receives the Analog Differential I and Q Data from the Video Distribution Circuit (VDC) 940 shown in FIG. 9 and distributes Analog Differential I and Q Data to each of the CDMA Modems 1210, 1211, 1212, 1215 of the MIU. The Automatic Gain Control Distribution Circuit (AGC) 1235 receives the AGC Data signal from the VDC and distributes the AGC Data to each of the CDMA Modems of the MIU. The TRL circuit 1233 receives the Traffic lights information and similarly distributes the Traffic light data to each of the Modems 1210, 1211, 1212, 1215.

The CDMA Modem

The CDMA modem provides for generation of CDMA spreading code sequences and synchronization between transmitter and receiver. It also provides four full duplex channels (TR0, TR1, TR2, TR3) programmable to 64, 32, 16, and 8 ksym/sec. each, for spreading and transmission at a specific power level. The CDMA mode measures the received signal strength to allow Automatic Power Control, it generates and transmits pilot signals, and encodes and decodes using the signal for forward error correction (FEC). The modem in an SU also performs transmitter spreading code pulse shaping using an FIR filter. The CDMA modem is also used by the Subscriber Unit (SU), and in the following discussion those features which are used only by the SU are distinctly pointed out. The operating frequencies of the CDMA modem are given in Table 10.

TABLE 10

Operating Frequencies			
Bandwidth (MHz)	Chip Rate (MHz)	Symbol Rate (KHz)	Gain (Chips/Symbol)
7	5.824	64	91
10	8.320	64	130
10.5	8.512	64	133
14	11.648	64	182
15	12.480	64	195

Each CDMA modem 1210, 1211, 1212, 1215 of FIG. 12, and as shown in FIG. 13, is composed of a transmit section 1301 and a receive section 1302. Also included in the CDMA modem is a control center 1303 which receives control messages CNTRL from the external system. These messages are used, for example, to assign particular spreading codes, activate the spreading or despreading, or to assign transmission rates. In addition, the CDMA modem has a code generator means 1304 used to generate the various spreading and despreading codes used by the CDMA modem. The transmit section 1301 is for transmitting the input information and control signals $mn(t)$, $i=1,2, \ldots I$ as spread-spectrum processed user information signals $sc_j(t)$, $j=1,2, \ldots J$. The transmit section 1301 receives the global pilot code from the code generator 1304 which is controlled by the control means 1303. The spread spectrum processed user information signals are ultimately added to other similar processed signals and transmitted as CDMA channels over the CDMA RF forward message link, for example to the SUs. The receive section 1302 receives CDMA channels as $r(t)$ and despreads and recovers the user information and control signals $rc_k(t)$, $k=1,2, \ldots K$ transmitted over the CDMA RF reverse message link, for example to the RCS from the SUs.

CDMA Modem Transmitter Section

Referring to FIG. 14, the code generator means 1304 includes Transmit Timing Control Logic 1401 and spreading code PN-Generator 1402, and the Transmit Section 1301 includes Modem Input Signal Receiver (MISR) 1410, Convolution Encoders 1411, 1412, 1413, 1414, Spreaders 1420, 1421, 1422, 1423, 1424, and Combiner 1430. The Transmit Section 1301 receives the message data channels MESSAGE, convolutionally encodes each message data channel in the respective convolutional encoder 1411, 1412, 1413, 1414, modulates the data with random spreading code sequence in the respective spreader 1420, 1421, 1422, 1423, 1424, and combines modulated data from all channels, including the pilot code received in the described embodiment from the code generator, in the combiner 1430 to generate I and Q components for RF transmission. The Transmitter Section 1301 of the present embodiment supports four (TR0, TR1, TR2, TR3) 64, 32, 16, 8 kb/s programmable channels. The message channel data is a time multiplexed signal received from the PCM highway 1201 through PCM interface 1220 and input to the MISR 1410.

FIG. 15 is a block diagram of an exemplary MISR 1410. For the exemplary embodiment of the present invention, a counter is set by the 8 KHz frame synchronization signal MPCMSYNC and is incremented by 2.048 MHz MPCMCLK from the timing circuit 1401. The counter output is compared by comparator 1502 against TRCFG values corresponding to slot time location for TR0, TR1, TR2, TR3 message channel data; and the TRCFG values are received from the MIU Controller 1230 in MCTRL. The comparator sends count signal to the registers 1505, 1506, 1507 and 1508 which clocks message channel data into buffers 1510, 1511, 1512, 1513 using the TXPCNCLK timing signal derived from the system clock. The message data is provided from the signal MSGDAT from the PCM highway signal MESSAGE when enable signals TR0EN, TR1EN, TR2EN and TR3EN from Timing Control Logic 1401 are active. In further embodiments, MESSAGE may also include signals that enable registers depending upon an encryption rate or data rate. If the counter output is equal to one of the channel location addresses, the specified transmit message data in registers 1510, 1511, 1512, 1513 are input to the convolutional encoders 1411, 1412, 1413, 1414 shown in FIG. 14.

The convolutional encoder enables the use of Forward Error Correction (FEC) techniques, which are well known in the art. FEC techniques depend on introducing redundancy in generation of data in encoded form. Encoded data is transmitted and the redundancy in the data enables the

receiver decoder device to detect and correct errors. One embodiment of the present invention employs convolutional encoding. Additional data bits are added to the data in the encoding process and are the coding overhead. The coding rate is expressed as the ratio of data bits transmitted to the total bits (code data+redundant data) transmitted and is called the rate "R" of the code.

Convolution codes are codes where each code bit is generated by the convolution of each new uncoded bit with a number of previously coded bits. The total number of bits used in the encoding process is referred to as the constraint length, "K", of the code. In convolutional coding, data is clocked into a shift register of K bits length so that an incoming bit is clocked into the register, and it and the existing K−1 bits are convolutionally encoded to create a new symbol. The convolution process consists of creating a symbol consisting of a module-2 sum of a certain pattern of available bits, always including the first bit and the last bit in at least one of the symbols.

FIG. **16** shows the block diagram of a K=7, R=½ convolution encoder suitable for use as the encoder **1411** shown in FIG. **14**. This circuit encodes the TR0 Channel as used in one embodiment of the present invention. Seven-Bit Register **1601** with stages Q1 through Q7 uses the signal TXPNCLK to clock in TR0 data when the TR0EN signal is asserted. The output value of stages Q1, Q2, Q3, Q4, Q6, and Q7 are each combined using EXCLUSIVE-OR Logic **1602**, **1603** to produce respective I and Q channel FEC data for the TR0 channel FECTR0DI and FECTR0DQ.

Two output symbol streams FECTR0DI and FECTR0DQ are generated. The FECTR0DI symbol stream is generated by EXCLUSIVE OR Logic **1602** of shift register outputs corresponding to bits **6**, **5**, **4**,**3**, and **0**, (Octal 171) and is designed as In phase component "I" of the transmit message channel data. The symbol stream FECTR0DQ is likewise generated by EXCLUSIVE-OR logic **1603** of shift register outputs from bits **6**, **4** 3, **1** and **0**, (Octal 133) and is designated as Quadrature component "Q" of the transmit message channel data. Two symbols are transmitted to represent a single encoded bit creating the redundancy necessary to enable error correction to take place on the receiving end.

Referring to FIG. **14**, the shift enable clock signal for the transmit message channel data is generated by the Control Timing Logic **1401**. The convolutionally encoded transmit message channel output data for each channel is applied to the respective spreader **1420**, **1421**, **1422**, **1423**, **1424** which multiplies the transmit message channel data by its preassigned spreading code sequence from code generator **1402**. This spreading code sequence is generated by control **1303** as previously described, and is called a random pseudonoise signature sequence (PN-code).

The output signal of each spreader **1420**, **1421**, **1422**, **1423**, **1424** is a spread transmit data channel. The operation of the spreader is as follows: the spreading of channel output (I+jQ) multiplied by a random sequence (PNI+jPNQ) yields the In-phase component I of the result being composed of (I xor PNI) and (−Qxor PNQ). Quadrature component Q of the result is (Q xor PNI) and (I xor PNQ). Since there is no channel data input to the pilot channel logic (I=1, Q values are prohibited), the spread output signal for pilot channels yields the respective sequences PNI for I component and PNQ for Q component.

The combiner **1430** receives the I and Q spread transmit data channels and combines the channels into an I modern transmit data signal (TXIDAT) and a Q modem transmit data signal (TXQDAT). The I-spread transmit data and the Q spread transmit data are added separately.

For an SU, the CDMA modem Transmit Section **1301** includes the FIR filters to receive the I and Q channels from the combiner to provide pulse shaping, close-in spectral control and x/sin (x) correction for the transmitted signal. Separate but identical FIR filters receive the I and Q spread transmit data streams at the chipping rate, and the output signal of each of the filters is at twice the chipping rate. The exemplary FIR filters are 28 tap even symmetrical filters, which upsample (interpolate) by 2. The upsampling occurs before the filtering, so that 28 taps refers to 28 taps at twice the chipping rate, and the upsampling is accomplished by setting every other sample a zero. Exemplary coefficients are shown in Table 11.

TABLE 11

	Coefficient Values													
Coeff. No.:	0	1	2	3	4	5	6	7	8	9	10	11	12	13
Value:	3	−11	−34	−22	19	17	−32	−19	52	24	−94	−31	277	468
Coeff. No.	14	15	16	17	18	19	20	21	22	24	25	26	27	
Value	277	−31	−94	24	52	−19	−32	17	19	−22	−34	−11	3	

CDMA Modem Receiver Section

Referring to FIGS. **9** and **12**, the RF receiver **950** of the present embodiment accepts analog input I and Q CDMA channels, which are transmitted to the CDMA modems **1210**, **1211**, **1212**, **1215** through the MIUs **931**, **932**, **933** from the VDC **940**. These I and Q CMDA channel signals are sampled by the CDMA modem receive section **1302** (shown in FIG. **13**) and converted to I and Q digital receive message signal using an Analog to Digital (AID) converter **1730**, shown in FIG. **17**. The sampling rate of the A/D converter of the exemplary embodiment of the present invention is equivalent to the despreading code rate. The I and Q digital receive message signals are then despread with correlators using six different complex spreading code sequences corresponding to the despreading code sequences of the four channels (TR0, TR1, TR2, TR3), APC information and the pilot code.

Time synchronization of the receiver to the received signal is separated into two phases; there is an initial acquisition phase and then a tracking phase after the signal timing has been acquired. The initial acquisition is done by shifting the phase of the locally generated pilot code sequence relative to the received signal and comparing the output of the pilot despreader to a threshold. The method used is called sequential search. Two thresholds (match and dismiss) are calculated from the auxiliary despreader. Once the signal is acquired, the search process is stopped and the tracking process begins. The tracking process maintains the code generator **1304** (shown in FIGS. **13** and **17**) used by the receiver in synchronization with the incoming signal. The

tracking loop used is the Delay-Locked Loop (DLL) and is implemented in the acquisition & track **1701** and the IPM **1702** blocks of FIG. **17**.

In FIG. **13**, the modem controller **1303** implements the Phase Lock Loop (PLL) as a software algorithm in SW PLL logic **1724** of FIG. **17** that calculates the phase and frequency shift in the received signal relative to the transmitted signal. The calculated phase shifts are used to derotate the phase shifts in rotate and combine blocks **1718**, **1719**, **1720**, **1721** of the multipath data signals for combining to produce output signals corresponding to receive channels TR0', TR1', TR2', TR3'. The data is then Viterbi decoded in Viterbi Decoders **1713**, **1714**, **1715**, **1716** to remove the convolutional encoding in each of the received message channels.

FIG. **17** indicates that the Code Generator **1304** provides the code sequences $Pn_i(t)$, i=1,2, . . . I used by the receive channel despreaders **1703**, **1704**, **1705**, **1706**, **1707**, **1708**, **1709**. The code sequences generated are timed in response to the SYNK signal of the system clock signal and are determined by the CCNTRL signal from the modem controller **1303** shown in FIG. **13**. Referring to FIG. **17**, the CDMA modem receiver section **1302** includes Adaptive Matched Filter (AMF) **1710**, Channel despreaders **1703**, **1704**, **1705**, **1706**, **1707**, **1708**, **1709**, Pilot AVC **1711**, Auxiliary AVC **1712**, Viterbi decoders **1713**, **1714**, **1715**, **1716**, Modem output interface (MOI) **1717**, Rotate and Combine logic **1718**, **1719**, **1720**, **1721**, AMF Weight Generator **1722**, and Quantile Estimation logic **1723**.

In another embodiment of the invention, the CDMA modem receiver also includes a Bit error Integrator to measure the BER of the channel and idle code insertion logic between the Viterbi decoders **1713**, **1714**, **1715**, **1716** and the MOI **1717** to insert idle codes in the event of loss of the message data.

The Adaptive Matched Filter (AMF) **1710** resolves multipath interference introduced by the air channel. The exemplary AMF **1710** uses an 11 stage complex FIR filter as shown in FIG. **18**. The received I and Q digital message signals are received at the register **1820** from the A/D **1730** of FIG. **17** and are multiplied in multipliers **1801**, **1802**, **1803**, **1810**, **1811** by I and Q channel weights W1 to W11 received from AMF weight generator **1722** of FIG. **17**. In the exemplary embodiment, the A/D **1730** provides the I and Q digital receive message signal data as 2's complement values, 6 bits for I and 6 bits for Q which are clocked through an 11 stage shift register **1820** responsive to the receive spreading-code clock signal RXPNCLK. The signal RXPNCLK is generated by the timing section **1401** of code generation logic **1304**. Each stage of the shift register is tapped and complex multiplied in the multipliers **1801**, **1802**, **1803**, **1810**, **1811** by individual (6-bit I and 6-bit Q) weight values to provide 11 tap-weighted products which are summed in adder **1830**, and limited to 7-bit I and 7-bit Q values.

The CDMA modern receive section **1302** (shown in FIG. **13**) provides independent channel despreaders **1703**, **1704**, **1705**, **1706**, **1707**, **1708**, **1709** (shown in FIG. **17**) for despreading the message channels. The described embodiment despreads **7** message channels, each despreader accepting a 1-bit I by 1-bit Q despreading code signal to perform a complex correlation of this code against a 8-bit I by 8-bit Q data input. The 7 despreaders correspond to the 7 channels: Traffic Channel **0** (TR0'), TR1', TR2, TR3', AUX (a spare channel), Automatic Power Control (APC) and pilot (PLT).

The Pilot AVC **1711** shown in FIG. **19** receives the I and Q Pilot Spreading code sequence values PCI and PCQ into shift register **1920** responsive to the timing signal RXPNCLK, and includes 11 individual despreaders **1901** through **1911** each correlating the I and Q digital receive message signal data with a one chip delayed version of the same pilot code sequence. Signals OE1, OE2, . . . OE11 are used by the modem control **1303** to enable the despreading operation. The output signals of the despreaders are combined in combiner **1920** forming correlation signal DSPRDAT of the Pilot AVC **1711**, which is received by the ACQ & Track logic **1701** (shown in FIG. **17**), and ultimately by modem controller **1303** (shown in FIG. **13**). The ACQ & Track logic **1701** uses the correlation signal value to determine if the local receiver is synchronized with its remote transmitter.

The Auxiliary AVC **1712** also receives the I and Q digital receive message signal data and, in the described embodiment, includes four separate despreaders **2001**, **2002**, **2003**, **2004** as shown in FIG. **20**. Each despreader receives and correlates the I and Q digital receive message data with delayed versions of the same despreading code sequence PARI and PARQ which are provided by code generator **1304** input to and contained in shift register **2020**. The output signals of the despreaders **2001**, **2002**, **2003**, **2004** are combined in combiner **2030** which provides noise correlation signal ARDSPRDAT. The auxiliary AVC spreading code sequence does not correspond to any transmit spreading code sequence of the system. Signals OE1, OE2, . . . OE4 are used by the modem control **1303** to enable the despreading operation. The Auxiliary AVC **1712** provides a noise correlation signal ARDSPRDAT from which quantile estimates are calculated by the Quantile estimator **1733**, and provides a noise level measurement to the ACQ & Track logic **1701** (shown in FIG. **17**) and modem controller **1303** (shown in FIG. **13**).

Each despread channel output signal corresponding to the received message channels TR0', TR1', TR2', and TR3' is input to a corresponding Viterbi decoder **1713**, **1714**, **1715**, **1716** shown in FIG. **17** which performs forward error correction on convolutionally encoded data. The Viterbi decoders of the exemplary embodiment have a constraint length of K=7 and a rate of R=½. The decoded despread message channel signals are transferred from the CDMA modem to the PCM Highway **1201** through the MOI **1717**. The operation of the MOI is essentially the same as the operation of the MISR of the transmit section **1301** (shown in FIG. **13**) except in reverse.

The CDMA modem receiver section **1302** implements several different algorithms during different phases of the acquisition, tracking and despreading of the receive CDMA message signal.

When the received signal is momentarily lost (or severely degraded) the idle code insertion algorithm inserts idle codes in place of the lost or degraded receive message data to prevent the user from hearing loud noise bursts on a voice call. The idle codes are sent to the MOI **1717** (shown in FIG. **17**) in place of the decoded message channel output signal from the Viterbi decoders **1713**, **1714**, **1715**, **1716**. The idle code used for each traffic channel is programmed by the Modem Controller **1303** by writing the appropriate pattern IDLE to the MOI, which in the present embodiment is a 8 bit word for a 64 kb/s stream, 4 bit word for a 32 kb/s stream.

Modem Algorithms for Acquisition and Tracking of Received Pilot Signal

The acquisition and tracking algorithms are used by the receiver to determine the approximate code phase of a

received signal, synchronize the local modem receiver despreaders to the incoming pilot signal, and track the phase of the locally generated pilot code sequence with the received pilot code sequence. Referring to FIGS. **13** and **17**, the algorithms are performed by the Modem controller **1303**, which provides clock adjust signals to code generator **1304**. These adjust signals cause the code generator for the despreaders to adjust locally generated code sequences in response to measured output values of the Pilot Rake **1711** and Quantile values from quantile estimators **1723B**. Quantile values are noise statistics measured from the In-phase and Quadrature channels from the output values of the AUX Vector Correlator **1712** (shown in FIG. **17**). Synchronization of the receiver to the received signal is separated into two phases; an initial acquisition phase and a tracking phase. The initial acquisition phase is accomplished by clocking the locally generated pilot spreading code sequence at a higher or lower rate than the received signal's spreading code rate, sliding the locally generated pilot spreading code sequence and performing sequential probability ratio test (SPRT) on the output of the Pilot Vector correlator **1711**. The tracking phase maintains the locally generated spreading code pilot sequence in synchronization with the incoming pilot signal. Details of the quantile estimators **1723B** may be found in U.S. patent application Ser. No. 08/218,198 entitled "ADAPTIVE POWER CONTROL FOR A SPREAD SPECTRUM COMMUNICATIONS SYSTEM" which is incorporated by reference herein for its teachings on adaptive power control systems.

The SU cold acquisition algorithm is used by the SU CDMA modem when it is first powered tip, and therefore has no knowledge of the correct pilot spreading code phase, or when an SU attempts to reacquire synchronization with the incoming pilot signal but has taken an excessive amount of time. The cold acquisition algorithm is divided into two sub-phases. The first subphase consists of a search over the length 233415 code used by the FBCH. Once this sub-code phase is acquired, the pilot's 233415×128 length code is known to within an ambiguity of 128 possible phases. The second subphase is a search of these remaining 128 possible phases. In order not to lose synch with the FBCH, in the second phase of the search, it is desirable to switch back and forth between tracking of the FBCH code and attempting acquisition of the pilot code.

The RCS acquisition of short access pilot (SAXPT) algorithm is used by an RCS CDMA modem to acquire the SAXPT pilot signal of an SU. Additional details of this technique are described in U.S. patent application entitled "A METHOD OF CONTROLLING INITIAL POWER RAMP-UP IN CDMA SYSTEMS BY USING SHORT CODES" filed on even date herewith and herein incorporated by reference. The algorithm is a fast search algorithm because the SAXPT is a short code sequence of length N, where N=chips/symbol, and ranges from 45 to 195, depending on the system's bandwidth. The search cycles through all possible phases until acquisition is complete.

The RCS acquisition of the long access pilot (LAXPT) algorithm begins immediately after acquisition of SAXPT. The SU's code phase is known within a multiple of a symbol duration, so in the exemplary embodiment of the invention there may be 7 to 66 phases to search within the round trip delay from the RCS. This bound is a result of the SU pilot signal being synchronized to the RCS Global pilot signal.

The re-acquisition algorithm begins when loss of code lock (LOL) occurs. A Z-search algorithm is used to speed the process on the assumption that the code phase has not drifted far from where it was the last time the system was locked. The RCS uses a maximum width of the Z-search windows bounded by the maximum round trip propagation delay.

The Pre-Track period immediately follows the acquisition or re-acquisition algorithms and immediately precedes the tracking algorithm. Pre-track is a fixed duration period during which the receive data provided by the modem is not considered valid. The Pre-Track period allows other modem algorithms, such as those used by the ISW PLL **1724**, ACQ & Tracking, AMF Weight GEN **1722**, to prepare and adapt to the current channel. The Pre-Track period is two parts. The first part is the delay while the code tracking loop pulls in. The second part is the delay while the AMF tap weight calculations are performed by the AMF Weight Gen **1722** to produce settled weighting coefficients. Also in the second part of the Pre-Track period, the carrier tracking loop is allowed to pull in by the SW PLL **1724**, and the scalar quantile estimates are performed in the Quantile estimator **1723A**.

The Tracking Process is entered after the Pre-Track period ends. This process is actually a repetitive cycle and is the only process phase during which receive data provided by the modem may be considered valid. The following operations are performed during this phase: AMF Tap Weight Update, Carrier Tracking, Code Tracking, Vector Quantile Update, Scalar Quantile Update, Code Lock Check, Derotation and Symbol Summing, and Power Control (forward and reverse)

If LOL is detected, the modem receiver terminates the Track algorithm and automatically enters the reaquisition algorithm. In the SU, a LOL causes the transmitter to be shut down. In the RCS, LOL causes forward power control to be disabled with the transmit power held constant at the level immediately prior to loss of lock. It also causes the return power control information being transmitted to assume a 010101... pattern, causing the SU to hold its transmit power constant. This can be performed using the signal lock check function which generates the reset signal to the acquisition and tracking circuit **1701**.

Two sets of quantile statistics are maintained, one by Quantile estimator **1723B** and the other by the scalar Quantile Estimator **1723A**. Both are used by the modem controller **1303**. The first set is the "vector" quantile information, so named because it is calculated from the vector of four complex values generated by the AUX AVC receiver **1712**. The second set is the scalar quantile information, which is calculated from the single complex value AUX signal that is output from the AUX Despreader **1707**. The two sets of information represent different sets of noise statistics used to maintain a pre-determined Probability of False Alarm (P_{fa}). The vector quantile data is used by the acquisition and reaquisition algorithms implemented by the modem controller **1303** to determine the presence of a received signal in noise, and the scalar quantile information is used by the code lock check algorithm.

For both the vector and scalar cases, quantile information consists of calculated values of lambda0 through lambda2, which are boundary values used to estimate the probability distribution function (p.d.f) of the despread receive signal and determine whether the modem is locked to the PN code. The Aux_Power value used in the following C-subroutine is the magnitude squared of the AUX signal output of the scalar correlator array for the scalar quantiles, and the sum of the magnitudes squared for the vector case. In both cases the quantiles are then calculated using the following C-subroutine:

```
for (n = 0; n < 3; n++) {
  lambda [n] += (lambda [n] < Aux_Power) ? CG[n] : GM[n];
}
```

where CG[n] are positive constants and GM[n] are negative constants (different values are used for scalar and vector quantiles).

During the acquisition phase, the search of the incoming pilot signal with the locally generated pilot code sequence employs a series of sequential tests to determine if the locally generated pilot code has the correct code phase relative to the received signal. The search algorithms use the Sequential Probability Ratio Test (SPRT) to determine whether the received and locally generated code sequences are in phase. The speed of acquisition is increased by parallelism resulting from having a multi-fingered receiver. For example, in the described embodiment of the invention the main Pilot Rake **1711** has a total of 11 fingers representing a total phase period of 11 chip periods. For acquisition 8 separate sequential probability ratio tests (SPRTs) are implemented, with each SPRT observing a 4 chip window. Each window is offset from the previous window by one chip, and in a search sequence any given code phase is covered by 4 windows. If all 8 of the SPRT tests are rejected, then the set of windows is moved by 8 chips. If any of the SPRT's is accepted, then the code phase of the locally generated pilot code sequence is adjusted to attempt to center the accepted SPRT's phase within the Pilot AVC. It is likely that more than one SPRT reaches the acceptance threshold at the same time. A table lookup is used cover all 256 possible combinations of accept/reject and the modem controller uses the information to estimate the correct center code phase within the Pilot Rake **1711**. Each SPRT is implemented as follows (all operations occur at 64 k symbol rate): Denote the fingers' output level values as I_Finger[n] and Q_Finger[n], where n=0 . . . 10 (inclusive, 0 is earliest (most advanced) finger), then the power of each window is:

$$\text{Power Window}[i] = \sum_n (I_\text{Finger}^2[n] + Q_\text{Finger}^2[n])$$

To implement the SPRT's the modem controller then performs for each of the windows the following calculations which are expressed as a pseudo-code subroutine:

```
/* find bin for Power */
tmp = SIGMA[0] ;
for (k = 0; k < 3; k++) {
  if (Power > lambda [k]) tmp = SIGMA[k+1];
}
test_statistic += tmp; /* update statistic */
if(test_statistic > ACCEPTANCE_THRESHOLD)you've got ACQ;
else if (test_statistic < DISMISSAL_THRESHOLD) {
  forget this code phase;
} else keep trying - get more statistics;
```

where lambda[k] are as defined in the above section on quantile estimation, and SIGMA[k], ACCEPTANCE_THRESHOLD and DISMISSAL_THRESHOLD are predetermined constants. Note that SIGMA[k] is negative for values for low values of k, and positive for right values of k, such that the acceptance and dismissal thresholds can be constants rather than a function of how many symbols worth of data have been accumulated in the statistic.

The modem controller determines which bin delimited by the values of lambda[k] the Power level falls into which allows the modem controller to develop an approximate statistic.

For the present algorithm, the control voltage is formed as $\epsilon = y^T B y$, where y is a vector formed from the complex valued output values of the Pilot Vector correlator **1711**, and B is a matrix consisting of the constant values pre-determined to maximize the operating characteristics while minimizing the noise as described previously with reference to the Quadratic Detector.

To understand the operation of the Quadratic Detector, it is useful to consider the following. A spread spectrum (CDMA) signal, s(t) is passed through a multipath channel with an impulse response $h_c(t)$. The baseband spread signal is described by equation (30).

$$s(t) = \sum_i C_i p(t - iT_c) \tag{30}$$

where C_i is a complex spreading code symbol, p(t) is a predefined chip pulse and T_c is the chip time spacing, where $T_c = 1/R_c$ and R_c is the chip rate.

The received baseband signal is represented by equation (31)

$$r(t) = \sum_i C_i q(t - iT_c - \tau) + n(t) \tag{31}$$

where $q(t) = p(t) * h_c(t)$, τ is an unknown delay and n(t) is additive noise. The received signal is processed by a filter, $h_R(t)$, so the waveform, x(t), to be processed is given by equation (32).

$$x(t) = \sum_i C_i f(t - iT_c - \tau) + z(t) \tag{32}$$

where $f(t) = q(t) * h_R(t)$ and $z(t) = n(t) * h_R(t)$.

In the exemplary receiver, samples of the received signal are taken at the chip rate, that is to say, $1/T_c$. These samples, $x(mT_c + \tau')$, are processed by an array of correlators that compute, during the rth correlation period, the quantities given by equation (33)

$$v_k^{(r)} = \sum_{m=rL}^{rL+L-1} x(mT_c + \tau')\, C_{m+k}^* \tag{33}$$

These quantities are composed of a noise component $W_k^{(r)}$ and a deterministic component $y_k^{(r)}$ given by equation (34).

$$y_k^{(r)} = E[v_k^{(r)}] = L f(kT_c + \tau' - \tau) \tag{34}$$

In the sequel, the time index r may be suppressed for ease of writing, although it is to be noted that the function f(t) changes slowly with time.

The samples are processed to adjust the sampling phase, τ', in an optimum fashion for further processing by the receiver, such as matched filtering. This adjustment is described below. To simplify the representation of the process, it is helpful to describe it in terms of the function $f(t+\tau)$, where the time-shift, τ, is to be adjusted. It is noted that the function $f(t+\tau)$ is measured in the presence of noise. Thus, it may be problematical to adjust the phase τ' based on measurements of the signal $f(t+\tau)$. To account for the noise, the function v(t): $v(t) = f(t) + m(t)$ is introduced, where the term m(t) represents a noise process. The system processor may be derived based on considerations of the function v(t).

The process is non-coherent and therefore is based on the envelope power function $|v(t+\tau)|^2$. The functional $e(\tau')$ given in equation (35) is helpful for describing the process.

$$e(\tau') = \int_{-\infty}^{0} |v(t + \tau' - \tau)|^2 dt - \int_{0}^{\infty} |v(t + \tau' - \tau)|^2 dt \tag{35}$$

The shift parameter is adjusted for $e(\tau') = 0$, which occurs when the energy on the interval $(-\infty, \tau' - \tau]$ equals that on the

interval $[\tau'-\tau,\infty)$. The error characteristic is monotonic and therefore has a single zero crossing point. This is the desirable quality of the functional. A disadvantage of the functional is that it is ill-defined because the integrals are unbounded when noise is present. Nevertheless, the functional $e(\tau')$ may be cast in the form given by equation (36).

$$e(\tau') = \int_{-\infty}^{\infty} w(t)|v(t+\tau'-\tau)|^2 dt \quad (36)$$

where the characteristic function w(t) is equal to sgn(t), the signum function.

To optimize the characteristic function w(t), it is helpful to define a figure of merit, F, as set forth in equation (37).

$$F = \frac{\overline{[e(\tau_0'+T_A)-e(\tau_0'-T_A)]^2}}{VAR\{e(\tau_0')\}} \quad (37)$$

The numerator of F is the numerical slope of the mean error characteristic on the interval $[-T_A,T_A]$ surrounding the tracked value, τ_0'. The statistical mean is taken with respect to the noise as well as the random channel, $h_c(t)$. It is desirable to specify a statistical characteristic of the channel in order to perform this statistical average. For example, the channel may be modeled as a Wide Sense Stationary Uncorrelated Scattering (WSSUS) channel with impulse response $h_c(t)$ and a white noise process U(t) that has an intensity function g(t) as shown in equation (38).

$$h_c(t) = \sqrt{g(t)}\ U(t) \quad (38)$$

The variance of $e(\tau)$ is computed as the mean square value of the fluctuation

$$e'(\tau)=e(\tau)-\langle e(\tau)\rangle \quad (39)$$

where $\langle e(\tau)\rangle$ is the average of $e(\tau)$ with respect to the noise.

Optimization of the figure of merit F with respect to the function w(t) may be carried out using well-known Variational methods of optimization.

Once the optimal w(t) is determined, the resulting processor may be approximated accurately by a quadratic sample processor which is derived as follows.

By the sampling theorem, the signal v(t), bandlimited to a bandwidth W may be expressed in terms of its samples as shown in equation (40).

$$v(t)=\Sigma v(k/W)\ \mathrm{sin}\ c[(Wt-k)\pi] \quad (40)$$

substituting this expansion into equation (z+6) results in an infinite quadratic form in the samples $v(k/W+\tau'-\tau)$. Making the assumption that the signal bandwidth equals the chip rate allows the use of a sampling scheme that is clocked by the chip clock signal to be used to obtain the samples. These samples, V_k are represented by equation (41).

$$v_k=v(kT_c+\tau'-\tau) \quad (41)$$

This assumption leads to a simplification of the implementation. It is valid if the aliasing error is small.

In practice, the quadratic form that is derived is truncated. An example normalized B matrix is given below in Table 12. For this example, an exponential delay spread profile $g(t)=\exp(-t/\tau)$ is assumed with τ equal to one chip. An aperture parameter T_A equal to one and one-half chips has also been assumed. The underlying chip pulse has a raised cosine spectrum with a 20% excess bandwidth.

TABLE 12

Example B matrix

0	0	0	0	0	0	0	0	0	0	0
0	0	−0.1	0	0	0	0	0	0	0	0
0	−0.1	0.22	0.19	−0.19	0	0	0	0	0	0
0	0	0.19	1	0.45	−0.2	0	0	0	0	0
0	0	−0.19	0.45	0.99	0.23	0	0	0	0	0
0	0	0	−0.2	0.23	0	−0.18	0.17	0	0	0
0	0	0	0	0	−0.18	−0.87	−0.42	0.18	0	0
0	0	0	0	0	0.17	−0.42	−0.92	−0.16	0	0
0	0	0	0	0	0	0.18	−0.16	−0.31	0	0
0	0	0	0	0	0	0	0	0	−0.13	0
0	0	0	0	0	0	0	0	0	0	0

Code tracking is implemented via a loop phase detector that is implemented as follows. The vector y is defined as a column vector which represents the 11 complex output level values of the Pilot AVC **1711**, and B denotes an 11×11 symmetric real valued coefficient matrix with predetermined values to optimize performance with the noncoherent Pilot AVC output values y. The output signal ϵ of the phase detector is given by equation (42):

$$\epsilon=y^T By \quad (42)$$

The following calculations are then performed to implement a proportional plus integral loop filter and the VCO:

$$x[n]=x[n-1]+\beta\epsilon$$

$$z[n]=z[n-1]+x[n]+\alpha\epsilon$$

for β and α which are constants chosen from modeling the system to optimize system performance for the particular transmission channel and application, and where x[n] is the loop filter's integrator output value and z[n] is the VCO output value. The code phase adjustments are made by the modem controller the following C-subroutine:

```
if (z > zmx) {
  delay phase 1/16 chip;
  z −= zmax;
} else if (z < −zmax) {
  advance phase 1/16 chip;
  z += zmax;
}
```

A different delay phase could be used in the above pseudo-code consistant with the present invention.

The AMF Tap-Weight Update Algorithm of the AMF Weight Gen **1722** occurs periodically to de-rotate and scale the phase of each finger value of the Pilot Rake **1711** by performing a complex multiplication of the Pilot AVC finger value with the complex conjugate of the current output value of the carrier tracking loop and applying the product to a low pass filter and form the complex conjugate of the filter values to produce AMF tap-weight values, which are periodically written into the AMF filters of the CDMA modem.

The lock check algorithm, shown in FIG. **17**, is implemented by the modem controller **1303** performing SPRT operations on the output signal of the scalar correlator array. The SPRT technique is the same as that for the acquisition algorithms, except that the acceptance and rejection thresholds are changed to increase the probability of detection of lock.

Carrier tracking is accomplished via a second order loop that operates on the pilot output values of the scalar correlated array. The phase detector output is the hard limited version of the quadrature component of the product of the

(complex valued) pilot output signal of the scalar correlated array and the VCO output signal. The loop filter is a proportional plus integral design. The VCO is a pure summation, accumulated phase error ϕ, which is converted to the complex phasor $\cos\phi+j\sin\phi$ using a look-up table in memory.

The previous description of acquisition and tracking algorithm focuses on a non-coherent method because the acquisition and tracking algorithm described requires non-coherent acquisition following by non-coherent tracking because during acquisition a coherent reference is not available until the AMF, Pilot AVC, Aux AVC, and DPLL are in an equilibrium state. However, it is known in the art that coherent tracking and combining is always optimal because in non-coherent tracking and combining the output phase information of each Pilot AVC finger is lost. Consequently, another embodiment of the invention employs a two step acquisition and tracking system, in which the previously described non-coherent acquisition and tracking algorithm is implemented first, and then the algorithm switches to a coherent tracking method. The coherent combining and tracking method is similar to that described previously, except that the error signal tracked is of the form:

$$\epsilon = y^T A y \tag{43}$$

where y is defined as a column vector which represents the 11 complex output level values of the Pilot AVC **171 1**, and A denotes an 11×11 symmetric real valued coefficient matrix with pre-determined values to optimize performance with the coherent Pilot AVC outputs y. An exemplary A matrix is shown below.

$$A = \begin{bmatrix} 1&0&0&0&0&0&0&0&0&0&0 \\ 0&1&0&0&0&0&0&0&0&0&0 \\ 0&0&1&0&0&0&0&0&0&0&0 \\ 0&0&0&1&0&0&0&0&0&0&0 \\ 0&0&0&0&1&0&0&0&0&0&0 \\ 0&0&0&0&0&0&0&0&0&0&0 \\ 0&0&0&0&0&-1&0&0&0&0&0 \\ 0&0&0&0&0&0&-1&0&0&0&0 \\ 0&0&0&0&0&0&0&-1&0&0&0 \\ 0&0&0&0&0&0&0&0&-1&-1&0 \\ 0&0&0&0&0&0&0&0&0&0&0 \end{bmatrix} \tag{44}$$

Referring to FIG. **9**, the Video Distribution Controller Board (VDC) **940** of the RCS is connected to each MIU **931**, **932**, **933** and the RF Transmitters/Receivers **950**. The VDC **940** is shown in FIG. **21**. The Data Combiner Circuitry (DCC) **2150** includes a Data Demultiplexer **2101**, Data Summer **2102**, FIR Filters **2103**, **2104**, and a Driver **2111**. The DCC **2150** 1) receives the weighted CDMA modem I and Q data signal MDAT from each of the MIUs, **931**, **932**, **933**, 2) sums the I and Q data with the digital bearer channel data from each MIU **931**, **932**, **933**, 3) and sums the result with the broadcast data message signal BCAST and the Global Pilot spreading code GPILOT provided by the master modem **1210**, 4) band shapes the summed signals for transmission, and 5) produces analog data signal for transmission to the RF Transmitter/Receiver.

FIR Filters **2103**, **2104** are used to modify the MIU CDMA Transmit I and Q Modem Data before transmission. The WAC transfers FIR Filter Coefficient data through the Serial Port link **912** through the VDC Controller **2120** and to the FIR filters **2103**, **2104**. Each FIR Filter **2103**, **2104** is Configured separately. The FIR Filters **2103**, **2104** employ Up-Sampling to operate at twice the chip rate so zero data values are sent after every MIU CDMA Transmit Modem DATI and DATQ value to produce FTXI and FTXQ

The VDC **940** distributes the AGC signal AGCDATA from the AGC **1750** of the MIUs **931**, **932**, **933** to the RF Transmitter/Receiver **950** through the Distribution interface (DI) **2110**. The VDC DI **2110** receives data RXI and RXQ from the RF Transmitter/Receiver and distributes the signal as VDATAI and VDATAQ to MIUs **931**, **932**, **933**.

Referring to FIG. **21**, the VDC **940** also includes a VDC controller **2120** which monitors status and fault information signals MIUSTAT from MIUs and connects to the serial link **912** and HSBS **970** to communicate with WAC **920** shown in FIG. **9**. The VDC controller **2120** includes a microprocessor, such as an Intel 8032 Microcontroller, an oscillator (not shown) providing timing signals, and memory (not shown). The VDC controller memory includes a Flash Prom (not shown) to contain the controller program code for the 8032 Microprocessor, and an SRAM (not shown) to contain the temporary data written to and read from memory by the microprocessor.

Referring to FIG. **9**, the present invention includes a RF Transmitter/Receiver **950** and power amplifier section **960**. Referring to FIG. **22** the RF Transmitter/Receiver **950** is divided into three sections: the transmitter module **2201**, the receiver module **2202**, and the Frequency Synthesizer **2203**. Frequency Synthesizer **2203** produces a transmit carrier frequency TFREQ and a receive carrier frequency RFREQ in response to a Frequency control signal FREQCTRL received from the WAC **920** on the serial link **912**. In the transmitter module **2201**, the input analog I and Q data signals TXI and TXQ from the VDC applied to the Quadrature modulator **2220**, which also receives a transmit carrier frequency signal TFREQ from the Frequency Synthesizer **2203** to produce a quadrature modulated transmit carrier signal TX. The analog transmit carrier modulated signal, an upconverted RF signal, TX is then applied to the Transmit Power Amplifier **2252** of the Power Amplifier **960**. The amplified transmit carrier signal is then passed through the High Power Passive Components (HPPC) **2253** to the Antenna **2250**, which transmits the upconverted RF signal to the communication channel as a CDMA RF signal. In one embodiment of the invention, the Transmit Power Amplifier **2252** comprises eight amplifiers of approximately 60 watts peak-to-peak each.

The HPPC **2253** comprises a lightning protector, an output filter, a 10 dB directional coupler, an isolator, and a high power termination attached to the isolator.

A receive CDMA RF signal is received at the antenna **2250** from the RF channel and passed through the HPPC **2253** to the Receive Power Amplifier **2251**. The receive power amplifier **2251** includes, for example, a 30 watt power transistor driven by a 5 watt transistor. The RF receive module **2202** has quadrature modulated receive carrier signal RX from the receive power amplifier. The receive module **2202** includes a Quadrature demodulator **2210** which takes the receive carrier modulated signal RX and the receive carrier frequency signal RFREQ from the Frequency Synthesizer **2203**, synchronously demodulates the carrier, and analog I and Q channels. These channels are filtered to produce the signals RXI and RXQ, which are transferred to the VDC **940**.

The Subscriber Unit

FIG. **23** shows the Subscriber Unit (SU) of one embodiment of the present invention. As shown, the SU includes an RF section **2301** including a RF modulator **2302**, RF demodulator **2303**, and splitter/isolator **2304** which receive Global and Assigned logical channels including traffic and control messages and Global Pilot signals in the Forward link CDMA RF channel signal, and transmit Assigned Channels and Reverse Pilot signals in the Reverse Link

CDMA RF channel. The Forward and Reverse links are received and transmitted respectively through antenna **2305**. The RF section employs, in one exemplary embodiment, a conventional dual conversion superheterodyne receiver having a synchronous demodulator responsive to the signal ROSC. Selectivity of such a receiver is provided by a 70 MHz transversal SAW filter (not shown). The RF modulator includes a synchronous modulator (not shown) responsive to the carrier signal TOSC to produce a quadrature modulated carrier signal. This signal is stepped up in frequency by an offset mixing circuit (not shown).

The SU further includes a Subscriber Line Interface **2310**, including the functionality of a control (CC) generator, a Data Interface **2320**, an ADPCM encoder **2321**, an ADPCM decoder **2322**, an SU controller **2330**, an SU clock signal generator **2331**, memory **2332**, and a CDMA modem **2340**, which is essentially the same as the CDMA modem **1210** described above with reference to FIG. **13**. It is noted that data interface **2320**, ADPCM Encoder **2321** and ADPCM Decoder **2322** are typically provided as a standard ADPCM Encoder/Decoder chip.

The Forward Link CDMA RF Channel signal is applied to the RF demodulator **2303** to produce the Forward link CDMA signal. The Forward Link CDMA signal is provided to the CDMA modem **2340**, which acquires synchronization with the Global pilot signal, produces global pilot synchronization signal to the Clock **2331**, to generate the system timing signals, and despreads the plurality of logical channels. The CDMA modem **2340** also acquires the traffic messages RMESS and control messages RCTRL and provides the traffic message signals RMESS to the Data Interface **2320** and receive control message signals RCTRL to the SU Controller **2330**.

The receive control message signals RCTRL include a subscriber identification signal, a coding signal, and bearer modification signals. The RCTRL may also include control and other telecommunication signaling information. The receive control message signal RCTRL is applied to the SU controller **2330**, which verifies that the call is for the SU from the Subscriber identification value derived from RCTRL. The SU controller **2330** determines the type of user information contained in the traffic message signal from the coding signal and bearer rate modification signal. If the coding signal indicates the traffic message is ADPCM coded, the traffic message RVMESS is sent to the ADPCM decoder **2322** by sending a select message to the Data Interface **2320**. The SU controller **2330** outputs an ADPCM coding signal and bearer rate signal derived from the coding signal to the ADPCM decoder **2322**. The traffic message signal RVMESS is the input signal to the ADPCM decoder **2322**, where the traffic message signal is converted to a digital information signal RINF in response to the values of the input ADPCM coding signal.

If the SU controller **2330** determines the type of user information contained in the traffic message signal from the coding signal is not ADPCM coded, then RDMESS passes through the ADPCM encoder transparently. The traffic message RDMESS is transferred from the Data Interface **2320** directly to the Interface Controller (IC) **2312** of the subscriber line interface **2310**.

The digital information signal RINF or RDMESS is applied to the subscriber line interface **2310**, including a interface controller (IC) **2312** and Line Interface (LI) **2313**. For the exemplary embodiment the IC is an Extended PCM Interface Controller (EPIC) and the LI is a Subscriber Line Interface Circuit (SLIC) for POTS which corresponds to RINF type signals, and a ISDN Interface for ISDN which corresponds to RDMESS type signals. The EPIC and SLIC circuits are well known in the art. The subscriber line interface **2310** converts the digital information signal RINF or RDMESS to the user defined format. The user defined format is provided to the IC **2312** from the SU Controller **2330**. The LI **2310** includes circuits for performing such functions as A-law or μ-law conversion, generating dial tone and, and generating or interpreting signaling bits. The line interface also produces the user information signal to the SU User **2350** as defined by the subscriber line interface, for example POTS voice, voiceband data or ISDN data service.

For a Reverse Link CDMA RF Channel, a user information signal is applied to the LI **2313** of the subscriber line interface **2310**, which outputs a service type signal and an information type signal to the SU controller. The IC **2312** of the subscriber line interface **2310** produces a digital information signal TINF which is the input signal to the ADPCM encoder **2321** if the user information signal is to be ADPCM encoded, such as for POTS service. For data or other non-ADPCM encoded user information, the IC **2312** passes the data message TDMESS directly to the Data Interface **2320**. The Call control module (CC), including in the subscriber line interface **2310**, derives call control information from the User information signal, and passes the call control information CCINF to the SU controller **2330**. The ADPCM encoder **2321** also receives coding signal and bearer modification signals from the SU controller **2330** and converts the input digital information signal into the output message traffic signal TVMESS in response to the coding and bearer modification signals. The SU controller **2330** also outputs the reverse control signal which includes the coding signal call control information, and bearer channel modification signal, to the CDMA modem. The output message signal TVMESS is applied to the Data Interface **2320**. The Data Interface **2320** sends the user information to the CDMA modern **2340** as transmit message signal TMESS. The CDMA modem **2340** spreads the output message and reverse control channels TCTRL received from the SU controller **2330**, and produces the reverse link CDMA Signal. The Reverse Link CDMA signal is provided to the RF transmit section **2301** and modulated by the RF modulator **2302** to produce the output Reverse Link CDMA RF channel signal transmitted from antenna **2305**.

Call Connection and Establishment Procedure

The process of bearer channel establishment consists of two procedures: the call connection process for a call connection incoming from a remote call processing unit such as an RDU (Incoming Call Connection), and the call connection process for a call outgoing from the SU (Outgoing Call Connection). Before any bearer channel can be established between an RCS and a SU, the SU must register its presence in the network with the remote call processor such as the RDU. When the off-hook signal is detected by the SU, the SU not only begins to establish a bearer channel; but also initiates the procedure for an RCS to obtain a terrestrial link between the RCS and the remote processor. As incorporated herein by reference, the process of establishing the RCS and RDU connection is detailed in the DECT V5.1 standard.

For the Incoming Call Connection procedure shown in FIG. **24**, first **2401**, the WAC **920** (shown in FIG. **9**) receives, via one of the MUXs **905**, **906** and **907**, an incoming call request from a remote call processing unit. This request identifies the target SU and that a call connection to the SU is desired. The WAC periodically outputs the SBCH channel

with paging indicators for each SU and periodically outputs the FBCH traffic lights for each access channel. In response to the incoming call request, the WAC, at step **2420**, first checks to see if the identified SU is already active with another call. If so, the WAC returns a busy signal for the SU to the remote processing unit through the MUX, otherwise the paging indicator for the channel is set.

Next, at step **2402**, the WAC checks the status of the RCS modems and, at step **2421**, determines whether there is an available modem for the call. If a modem is available, the traffic lights on the FBCH indicate that one or more AXCH channels are available. If no channel is available after a certain period of time, then the WAC returns a busy signal for the SU to the remote processing unit through the MUX. If an RCS modem is available and the SU is not active (in Sleep mode), the WAC sets the paging indicator for the identified SU on the SBCH to indicate an incoming call request. Meanwhile, the access channel modems continuously search for the Short Access Pilot signal (SAXPT) of the SU.

At step **2403**, an SU in Sleep mode periodically enters awake mode. In awake mode, the SU modem synchronizes to the Downlink Pilot signal, waits for the SU modem AMF filters and phase locked loop to settle, and reads the paging indicator in the slot assigned to it on the SBCH to determine if there is a call for the SU **2422**. If no paging indicator is set, the SU halts the SU modem and returns to sleep mode. If a paging indicator is set for an incoming call connection, the SU modem checks the service type and traffic lights on FBCH for an available AXCH.

Next, at step **2404**, the SU modem selects an available AXCH and starts a fast transmit power ramp-up on the corresponding SAXPT. For a period the SU modem continues fast power ramp-up on SAXPT and the access modems continue to search for the SAXPT.

At step **2405**, the RCS modem acquires the SAXPT of the SU and begins to search for the SU LAXPT. When the SAXPT is acquired, the modem informs the WAC controller, and the WAC controller sets the traffic lights corresponding to the modem to "red" to indicate the modern is now busy. The traffic lights are periodically output while continuing to attempt acquisition of the LAXPT.

The SU modem monitors, at step **2406**, the FBCH AXCH traffic light. When the AXCH traffic light is set to red, the SU assumes the RCS modem has acquired the SAXPT and begins transmitting LAXPT. The SU modem continues to ramp-up power of the LAXPT at a slower rate until Sync-Ind messages are received on the corresponding CTCH. If the SU is mistaken because the traffic light was actually set in response to another SU acquiring the AXCH, the SU modem times out because no Sync-Ind messages are received. The SU randomly waits a period of time, picks a new AXCH channel, and steps **2404** and **2405** are repeated until the SU modem receives Sync-Ind messages. Details of the power ramp up method used in the exemplary embodiment of this invention may be found in the U.S. patent application entitled METHOD OF CONTROLLING INITIAL POWER RAMP-UP IN CDMA SYSTEMS BY USING SHORT CODES filed on even date herewith, which is hereby incorporated by reference.

Next, at step **2407**, the RCS modem acquires the LAXPT of the SU and begins sending Sync-Ind messages on the corresponding CTCH. The modem waits 10 msec for the Pilot and AUX Vector correlator filters and Phase locked loop to settle, but continues to send Synch-Ind messages on the CTCH. The modem then begins looking for a request message for access to a bearer channel (MAC_ACC_REQ), from the SU modem.

The SU modem, at step **2408**, receives the Sync-Ind message and freezes the LAXPT transmit power level. The SU modem then begins sending repeated request messages for access to a bearer traffic channel (MAC_ACC_REQ) at fixed power levels, and listens for a request confirmation message (MAC_BEARER_CFM) from the RCS modem.

Next, at step **2409**, the RCS modem receives a MAC_ACC_REQ message; the modem then starts measuring the AXCH power level, and starts the APC channel. The RCS modem then sends the MAC_BEARER_CFM message to the SU and begins listening for the acknowledgment MAC_BEARER_CFM_ACK of the MAC_BEARER_CFM message.

At step **2410**, the SU modem receives the MAC_BEARER_CFM message and begins obeying the APC power control messages. The SU stops sending the MAC_ACC_REQ message and sends the RCS modem the MAC_BEARER_CFM_ACK message. The SU begins sending the null data on the AXCH. The SU waits 10 msec for the uplink transmit power level to settle.

The RCS modem, at step **2411**, receives the MAC_BEARER_CFM_ACK message and stops sending the MAC_BEARER_CFM messages. APC power measurements continue.

Next, at step **2412**, both the SU and the RCS modems have synchronized the sub-epochs, obey APC messages, measure receive power levels, and compute and send APC messages. The SU waits 10 msec for downlink power level to settle.

Finally, at step **2413**, Bearer channel is established and initialized between the SU and RCS modems. The WAC receives the bearer establishment signal from the RCS modem, re-allocates the AXCH channel and sets the corresponding traffic light to green.

For the Outgoing Call Connection shown in FIG. **25**, the SU is placed in active mode by the off-hook signal at the user interface at step **2501**.

Next, at step **2502**, the RCS indicates available AXCH channels by setting the respective traffic lights.

At step **2503**, the SU synchronizes to the Downlink Pilot, waits for the SU modem Vector correlator filters and phase lock loop to settle, and the SU checks service type and traffic lights for an available AXCH.

Steps **2504** through **2513** are identical to the procedure steps **2404** through **2413** for the Incoming Call Connection procedure of FIG. **24**, and so are not explained in detail.

In the previous procedures for Incoming Call Connection and Outgoing Call Connection, the power Ramping-Up process consists of the following events. The SU starts from very low transmit power and increases its power level while transmitting the short code SAXPT; once the RCS modem detects the short code it turns off the traffic light. Upon detecting the changed traffic light, the SU continues ramping-up at a slower rate this time sending the LAXPT. Once the RCS modem acquires the LAXPT and sends a message on CTCH to indicate this, the SU keeps its transmit (TX) power constant and sends the MAC-Access-Request message. This message is answered with a MAC_BEARER_CFM message on the CTCH. Once the SU receives the MAC_BEARER_CFM message it switches to the traffic channel (TRCH) which is the dial tone for POTS.

When the SU captures a specific user channel AXCH, the RCS assigns a code seed for the SU through the CTCH. The

code seed is used by the spreading code generator in the SU modem to produce the assigned code for the reverse pilot of the subscriber, and the spreading codes for associated channels for traffic, call control, and signaling. The SU reverse pilot spreading code sequence is synchronized in phase to the RCS system Global Pilot spreading code sequence, and the traffic, call control, and signaling spreading codes are synchronized in phase to the SU reverse pilot spreading code sequence.

If the Subscriber unit is successful in capturing a specific user channel, the RCS establishes a terrestrial link with the remote processing unit to correspond to the specific user channel. For the DECT V5.1 standard, once the complete link from the RDU to the LE is established using the V5.1 ESTABLISHMENT message, a corresponding V5.1 ESTABLISHMENT ACK message is returned from the LE to the RDU, and the Subscriber Unit is sent a CONNECT message indicating that the transmission link is complete.

Support of Special Service Types

The system of the present invention includes a bearer channel modification feature which allows the transmission rate of the user information to be switched from a lower rate to a maximum of 64 kb/s. The Bearer Channel Modification (BCM) method is used to change a 32 kb/s ADPCM channel to a 64 kb/s PCM channel to support high speed data and fax communications through the spread-spectrum communication system of the present invention. Additional details of this technique are described in U.S. patent application entitled "CDMA COMMUNICATION SYSTEM WHICH SELECTIVELY SUPPRESSES DATA TRANSMISSIONING DURING ESTABLISHMENT OF A COMMUNICATION CHANNEL" filed on even date herewith and incorporated herein by reference.

First, a bearer channel on the RF interface is established between the RCS and SU, and a corresponding link exists between the RCS terrestrial interface and the remote processing unit, such as an RDU. The digital transmission rate of the link between the RCS and remote processing unit normally corresponds to a data encoded rate, which may be, for example, ADPCM at 32 kb/s. The WAC controller of the RCS monitors the encoded digital data information of the link received by the Line Interface of the MUX. If the WAC controller detects the presence of the 2100 Hz tone in the digital data, the WAC instructs the SU through the assigned logical control channel and causes a second, 64 kb/s duplex link to be established between the RCS modem and the SU. In addition, the WAC controller instructs the remote processing unit to establish a second 64 kb/s duplex link between the remote processing unit and the RCS. Consequently, for a brief period, the remote processing unit and the SU exchange the same data over both the 32 kb/s and the 64 kb/s links through the RCS. Once the second link is established, the remote processing unit causes the WAC controller to switch transmission only to the 64 kb/s link, and the WAC controller instructs the RCS modern and the SU to terminate and tear down the 32 kb/s link. Concurrently, the 32 kb/s terrestrial link is also terminated and torn down.

Another embodiment of the BCM method incorporates a negotiation between the external remote processing unit, such as the RDU, and the RCS to allow for redundant channels on the terrestrial interface, while only using one bearer channel on the RF interface. The method described is a synchronous switchover from the 32 kb/s link to the 64 kb/s link over the air link which takes advantage of the fact that the spreading code sequence timing is synchronized between the RCS modem and SU. When the WAC controller detects the presence of the 2100 Hz tone in the digital data, the WAC controller instructs the remote processing unit to establish a second 64 kb/s duplex link between the remote processing unit and the RCS. The remote processing unit then sends 32 kb/s encoded data and 64 kb/s data concurrently to the RCS. Once the remote processing unit has established the 64 kb/s link, the RCS is informed and the 32 kb/s link is terminated and torn down. The RCS also informs the SU that the 32 kb/s link is being torn down and to switch processing to receive unencoded 64 kb/s data on the channel. The SU and RCS exchange control messages over the bearer control channel of the assigned channel group to identify and determine the particular subepoch of the bearer channel spreading code sequence within which the RCS will begin transmitting 64 kbit/sec data to the SU. Once the subepoch is identified, the switch occurs synchronously at the identified subepoch boundary. This synchronous switchover method is more economical of bandwidth since the system does not need to maintain capacity for a 64 kb/s link in order to support a switchover.

The previously described embodiments of the BCM feature, the RCS will tear down the 32 kb/s link first, but one skilled in the art would know that the RCS could tear down the 32 kb/s link after the bearer channel has switched to the 64 kb/s link.

As another special service type, the system of the present invention includes a method for conserving capacity over the RF interface for ISDN types of traffic. This conservation occurs while a known idle bit pattern is transmitted in the ISDN D-channel when no data information is being transmitted. The CDMA system of the present invention includes a method to prevent transmission of redundant information carried on the D-channel of ISDN networks for signals transmitted through a wireless communication link. The advantage of such method is that it reduces the amount of information transmitted and consequently the transmit power and channel capacity used by that information. The method is described as it is used in the RCS. In the first step, the controller, such as the WAC of the RCS or the SU controller of the SU, monitors the output D-channel from the subscriber line interface for a pre-determined channel idle pattern. A delay is included between the output of the line interface and the CDMA modem. Once the idle pattern is detected, the controller inhibits the transmission of the spread message channel through a message included in the control signal to the CDMA modem. The controller continues to monitor the output D-channel of the line interface until the presence of data information is detected. When data information is detected, the spread message channel is activated. Because the message channel is synchronized to the associated pilot which is not inhibited, the corresponding CDMA modem of the other end of the communication link does not have to reacquire synchronization to the message channel.

Drop Out Recovery

The RCS and SU each monitor the CDMA bearer channel signal to evaluate the quality of the CDMA bearer channel connection. Link quality is evaluated using the sequential probability ratio test (SPRT) employing adaptive quantile estimation. The SPRT process uses measurements of the received signal power; and if the SPRT process detects that the local spreading code generator has lost synchronization with the received signal spreading code or if it detects the absence or low level of a received signal, the SPRT declares loss of lock (LOL).

When the LOL condition is declared, the receiver modem of each RCS and SU begins a Z-search of the input signal with the local spreading code generator. Z-search is well known in the art of CDMA spreading code acquisition and detection and is described in *Digital Communications and Spread Spectrum Systems*, by to Robert E. Ziemer and Roger L. Peterson, at pages 492–94 which is incorporated herein by reference. The Z-search algorithm of the present invention tests groups of eight spreading code phases ahead and behind the last known phase in larger and larger spreading code phase increments.

During the LOL condition detected by the RCS, the RCS continues to transmit to the SU on the Assigned Channels, and continues to transmit power control signals to the SU to maintain SU transmit power level. The method of transmitting power control signals is described below. Successful reacquisition desirably takes place within a specified period of time. If reacquisition is successful, the call connection continues, otherwise the RCS tears down the call connection by deactivating and deallocating the RCS modem assigned by the WAC, and transmits a call termination signal to a remote call processor, such as the RDU, as described previously.

When the LOL condition is detected by the SU, the SU stops transmission to the RCS on the Assigned Channels which forces the RCS into a LOL condition, and starts the reacquisition algorithm. If reacquisition is successful, the call connection continues, and if not successful, the RCS tears down the call connection by deactivating and deallocating the SU modem as described previously.

POWER CONTROL

General

The power control feature of the present invention is used to minimize the amount of transmit power used by an RCS and the SUs of the system, and the power control subfeature that updates transmit power during bearer channel connection is defined as automatic power control (APC). AC data is transferred from the RCS to an SU on the forward APC channel and from an SU to the RCS on the reverse APC channel. When there is no active data link between the two, the maintenance power control (MPC) subfeature updates the SU transmit power.

Transmit power levels of forward and reverse assigned channels and reverse global channels are controlled by the APC algorithm to maintain sufficient signal power to interference noise power ratio (SIR) on those channels, and to stabilize and minimize system output power. The present invention uses a closed loop power control mechanism in which a receiver decides that the transmitter should incrementally raise or lower its transmit power. This decision is conveyed back to the respective transmitter via the power control signal on the APC channel. The receiver makes the decision to increase or decrease the transmitter's power based on two error signals. One error signal is an indication of the difference between the measured and desired despread signal powers, and the other error signal is an indication of the average received total power.

As used in the described embodiment of the invention, the term near-end power control is used to refer to adjusting the transmitter's output power in accordance with the APC signal received on the APC channel from the other end. This means the reverse power control for the SU and forward power control for the RCS; and the term far-end APC is used to refer to forward power control for the SU and reverse power control for the RCS (adjusting the opposite end's transmit power).

In order to conserve power, the SU modem terminates transmission and powers-down while waiting for a call, defined as the sleep phase. Sleep phase is terminated by an awaken signal from the SU controller. The SU modem acquisition circuit automatically enters the reacquisition phase, and begins the process of acquiring the downlink pilot, as described previously.

Closed Loop Power Control Algorithms

The near-end power control consists of two steps: first, the initial transmit power is set; and second, the transmit power is continually adjusted according to information received from the far-end using APC.

For the SU, initial transmit power is set to a minimum value and then ramped up, for example, at a rate of 1 dB/ms until either a ramp-up timer expires (not shown) or the RCS changes the corresponding traffic light value on the FBCH to "red" indicating that the RCS has locked to the SU's short pilot SAXPT. Expiration of the timer causes the SAXPT transmission to be shut down, unless the traffic light value is set to red first, in which case the SU continues to ramp-up transmit power but at a much lower rate than before the "red" signal was detected.

For the RCS, initial transmit power is set at a fixed value, corresponding to the minimum value necessary for reliable operation as determined experimentally for the service type and the current number of system users. Global channels, such as Global Pilot or, FBCH, are always transmitted at the fixed initial power, whereas traffic channels are switched to APC.

The APC bits are transmitted as one bit up or down signals on the APC channel. In the described embodiment, the 64 kb/s APC data stream is not encoded or interleaved.

Far-end power control consists of the near-end transmitting power control information for the far-end to use in adjusting its transmit power.

The APC algorithm causes the RCS or the SU to transmit +1 if the following inequality holds, otherwise −1.

$$\alpha_1 e_1 - \alpha_2 e_2 > 0 \tag{45}$$

Here, the error signal e_1 is calculated as

$$e_1 = P_d - (1+SNR_{REQ})P_N \tag{46}$$

where P_d is the despread signal plus noise power, P_N is the despread noise power, and SNR_{REQ} is the desired despread signal to noise ratio for the particular service type; and

$$e_2 = P_r - P_o \tag{47}$$

where P_r is a measure of the received power and P_o is the automatic gain control (AGC) circuit set point. The weights α_1 and α_2 in equation (33) are chosen for each service type and APC update rate.

Maintenance Power Control

During the sleep phase of the SU, the interference noise power of the CDMA RF channel may change. The present invention includes a maintenance power control feature (MPC) which periodically adjusts the SU's initial transmit power with respect to the interference noise power of the CDMA channel. The MPC is the process whereby the transmit power level of an SU is maintained within close

proximity of the minimum level for the RCS to detect the SU's signal. The MPC process compensates for low frequency changes in the required SU transmit power.

The maintenance control feature uses two global channels: one is called the status channel (STCH) on reverse link, and the other is called the check-up channel (CUCH) on forward link. The signals transmitted on these channels carry no data and they are generated the same way the short codes used in initial power ramp-up are generated. The STCH and CUCH codes are generated from a "reserved" branch of the global code generator.

The MPC process is as follows. At random intervals, the SU sends a symbol length spreading code periodically for 3 ms on the status channel (STCH). If the RCS detects the sequence, it replies by sending a symbol length code sequence within the next 3 ms on the check-up channel (CUCH). When the SU detects the response from the RCS, it reduces its transmit power by a particular step size. If the SU does not see any response from the RCS within that 3 ms period, it increases its transmit power by the step size. Using this method, the RCS response is transmitted at a power level that is enough to maintain a 0.99 detection probability at all SU's.

The rate of change of traffic load and the number of active users is related to the total interference noise power of the CDMA channel. The update rate and step size of the maintenance power update signal for the present invention is determined by using queuing theory methods well known in the art of communication theory, such as outlined in "*Fundamentals of Digital Switching*" (Plenum-New York) edited by McDonald and incorporated herein by reference. By modeling the call origination process as an exponential random variable with mean 6.0 mins, numerical computation shows the maintenance power level of a SU should be updated once every 10 seconds or less to be able to follow the changes in interference level using 0.5 dB step size. Modeling the call origination process as a Poisson random variable with exponential interarrival times, arrival rate of 2×10^{-4} per second per user, service rate of $\frac{1}{360}$ per second, and the total subscriber population is 600 in the RCS service area also yields by numerical computation that an update rate of once every 10 seconds is sufficient when 0.5 dB step size is used.

Maintenance power adjustment is performed periodically by the SU which changes from sleep phase to awake phase and performs the MPC process. Consequently, the process for the MPC feature is shown in FIG. **26** and is as follows: First, at step **2601**, signals are exchanged between the SU and the RCS maintaining a transmit power level that is close to the required level for detection: the SU periodically sends a symbol length spreading code in the STCH, and the RCS periodically sends a symbol length spreading code in the CUCH as response.

Next, at step **2602**, if the SU receives a response within 3 ms after the STCH message it sent, it decreases its transmit power by a particular step size at step **2603**; but if the SU does not receive a response within 3 ms after the STCH message, it increases its transmit power by the same step size at step **2604**.

The SU waits, at step **2605**, for a period of time before sending another STCH message, this time period is determined by a random process which averages 10 seconds.

Thus, the transmit power of the STCH messages from the SU is adjusted based on the RCS response periodically, and the transmit power of the CUCH messages from the RCS is fixed.

Mapping of Power Control Signal to Logical Channels For APC

Power control signals are mapped to specified Logical Channels for controlling transmit power levels of forward and reverse assigned channels. Reverse global channels are also controlled by the APC algorithm to maintain sufficient signal power to interference noise power ratio (SIR) on those reverse channels, and to stabilize and minimize system output power. The present invention uses a closed loop power control method in which a receiver periodically decides to incrementally raise or lower the output power of the transmitter at the other end. The method also conveys that decision back to the respective transmitter.

TABLE 13

	APC Signal Channel Assignments		
Link Channels and Signals	Call/Connection Status	Power Control Method: Initial Value	Power Control Method: Continuous
Reverse link AXCH AXPT	Being Established	as determined by power ramping	APC bits in forward APC channel
Reverse link APC, OW, TRCH, pilot signal	In-Progress	level established during call set-up	APC bits in forward APC channel
Forward link APC, OW, TRCH	In-Progress	fixed value	APC bits in reverse APC channel

Forward and reverse links are independently controlled. For a call/connection in process, forward link (TRCHs APC, and OW) power is controlled by the APC bits transmitted on the reverse APC channel. During the call/connection establishment process, reverse link (AXCH) power is also controlled by the APC bits transmitted on the forward APC channel. Table 13 summarizes the specific power control methods for the controlled channels.

The required SIRs of the assigned channels TRCH, APC and OW and reverse assigned pilot signal for any particular SU are fixed in proportion to each other and these channels are subject to nearly identical fading, therefore, they are power controlled together.

Adaptive Forward Power Control

The AFPC process attempts to maintain the minimum required SIR on the forward channels during a call/connection. The AFPC recursive process, shown in FIG. **27**, consists of the steps of having an SU form the two error signals e_1 and e_2 in step **2701** where

$$e_1=P_d-(1+SNR_{REQ})P_N \quad (36)$$

$$e_2=P_r-P_o \quad (37)$$

and P_d is the despread signal plus noise power, P_N is the despread noise power, SNR_{REQ} is the required signal to noise ratio for the service type, P_r is a measure of the total received power, and P_o is the AGC set point. Next, the SU modem forms the combined error signal $\alpha_1 e_1+\alpha_2 e_2$ in step **2702**. Here, the weights α_1 and α_2 are chosen for each service type and APC update rate. In step **2703**, the SU hard limits the combined error signal and forms a single APC bit. The SU transmits the APC bit to the RCS in step **2704** and RCS modem receives the bit in step **2705**. The RCS increases or decreases its transmit power to the SU in step **2706** and the algorithm repeats starting from step **2701**.

Adaptive Reverse Power Control

The ARPC process maintains the minimum desired SIR on the reverse channels to minimize the total system reverse output power, during both call/connection establishment and while the call/connection is in progress. The recursive ARPC process, shown in FIG. **28**, begins at step **2801** where the RCS modem forms the two error signals e_1 and e_2 in step **2801** where

$$e_1=P_d-(1+SNR_{REQ})P_N \quad (38)$$

$$e_2P_r-P_o \quad (39)$$

and P_d is the despread signal plus noise power, P_N is the despread noise power, SNR_{REQ} is the desired signal to noise ratio for the service type, P_r is a measure of the average total power received by the RCS, and P_o is the AGC set point. The RCS modem forms the combined error signal $\alpha_1e_1+\alpha_2e_2$ in step **2802** and hard limits this error signal to determine a single APC bit in step **2803**. The RCS transmits the APC bit to the SU in step **2804**, and the bit is received by the SU in step **2805**. Finally, the SU adjusts its transmit power according to the received APC bit in step **2806**, and the algorithm repeats starting from step **2801**.

TABLE 14

Symbols/Thresholds Used for APC Computation

Service or Call Type	Call/Connection Status	Symbol (and Threshold) Used for APC Decision
Don't care	Being Established	AXCH
ISDN D SU	In-Progress	one 1/64-kb/s symbol from TRCH (ISDN-D)
ISDN 1B + D SU	In-Progress	TRCH (ISDN-B)
ISDN 2B + D SU	In-Progress	TRCH (one ISDN-B)
POTS SU (64 KBPS PCM)	In-Progress	one 1/64-KBPS symbol from TRCH, use 64 KBPS PCM threshold
POTS SU (32 KBPS ADPCM)	In-Progress	one 1/64-KBPS symbol from TRCH, use 32 KBPS ADPCM threshold
Silent Maintenance Call (any SU)	In-Progress	OW (continuous during a maintenance call)

SIR and Multiple Channel Types

The required SIR for channels on a link is a function of channel format (e.g. TRCH, OW), service type (e.g. ISDN B, 32 KBPS ADPCM POTS), and the number of symbols over which data bits are distributed (e.g. two 64 kb/s symbols are integrated to form a single 32 kb/s ADPCM POTS symbol). Despreader output power corresponding to the required SIR for each channel and service type is predetermined. While a call/connection is in progress, several user CDMA logical channels are concurrently active; each of these channels transfers a symbol every symbol period. The SIR of the symbol from the nominally highest SIR channel is measured, compared to a threshold and used to determine the APC step up/down decision each symbol period. Table 14 indicates the symbol (and threshold) used for the APC computation by service and call type.

APC Parameters

APC information is always conveyed as a single bit of information, and the APC Data Rate is equivalent to the APC Update Rate. The APC update rate is 64 kb/s. This rate is high enough to accommodate expected Rayleigh and Doppler fades, and allow for a relatively high (~0.2) Bit Error Rate (BER) in the Uplink and Downlink APC channels, which minimizes capacity devoted to the APC.

The power step up/down indicated by an APC bit is nominally between 0.1 and 0.01 dB. The dynamic range for power control is 70 dB on the reverse link and 12 dB on the forward link for the exemplary embodiment of the present system.

Alternative Embodiment of Multiplexing of APC Information

The dedicated APC and OW logical channels described previously can also be multiplexed together in one logical channel. The APC information is transmitted at 64 kb/s, continuously whereas the OW information occurs in data bursts. The alternative multiplexed logical channel includes the unencoded, non-interleaved 64 kb/s. APC information on, for example, the In-phase channel and the OW information on the Quadrature channel of the QPSK signal.

Closed Loop Power Control Implementation

The closed loop power control during a call connection responds to two different variations in overall system power. First, the system responds to local behavior such as changes in power level of an SU, and second, the system responds to changes in the power level of the entire group of active users in the system.

The Power Control system of the exemplary embodiment of the present invention is shown in FIG. **29**. As shown, the circuitry used to adjust the transmitted power is similar for the RCS (shown as the RCS power control module **2901**) and SU (shown as the SU power control module **2902**). Beginning with the RCS power control module **2901**, the reverse link RF channel signal is received at the RF antenna and demodulated to produce the reverse CDMA signal RMCH. The signal RMCH is applied to the variable gain amplifier (VGA1) **2910** which produces an input signal to the Automatic Gain Control (AGC) Circuit **2911**. The AGC **2911** produces a variable gain amplifier control signal into the VGA1 **2910**. This signal maintains the level of the output signal of VGA1 **2910** at a near constant value. The output signal of VGA1 is despread by the despread-demultiplexer (demux) **2912**, which produces a despread user message signal MS and a forward APC bit. The forward APC bit is applied to the integrator **2913** to produce the Forward APC control signal. The Forward APC control signal controls the Forward Link VGA2 **2914** and maintains the Forward Link RF channel signal at a minimum desired level for communication.

The signal power of the despread user message signal MS of the RCS power module **2901** is measured by the power

measurement circuit **2915** to produce a signal power indication. The output of the VGA1 is also despread by the AUX despreader which despreads the signal by using an uncorrelated spreading code, and hence obtains a despread noise signal. The power measurement of this signal is multiplied by 1 plus the desired signal to noise ratio (SNR_R) to form the threshold signal S1. The difference between the despread signal power and the threshold value S1 is produced by the subtracter **2916**. This difference is the error signal ES1, which is an error signal relating to the particular SU transmit power level. Similarly, the control signal for the VGA1 **2910** is applied to the rate scaling circuit **2917** to reduce the rate of the control signal for VGA1 **2910**. The output signal of scaling circuit **2917** is a scaled system power level signal SP1. The Threshold Compute logic **2918** calculates the System Signal Threshold value SST from the RCS user channel power data signal RCSUSR. The complement of the Scaled system power level signal, SP1, and the System Signal Power Threshold value SST are applied to the adder **2919** which produces second error signal ES2. This error signal is related to the system transmit power level of all active SUs. The input Error signals ES1 and ES2are combined in the combiner **2920** produce a combined error signal input to the delta modulator (DM1) **2921**, and the output signal of the DM1 is the reverse APC bit stream signal, having bits of value +1 or −1, which for the present invention is transmitted as a 64 kb/sec signal.

The Reverse APC bit is applied to the spreading circuit **2922**, and the output signal of the spreading circuit **2922** is the spread-spectrum forward APC message signal. Forward OW and Traffic signals are also provided to spreading circuits **2923**, **2924**, producing forward traffic message signals **1**, **2**, . . . N. The power level of the forward APC signal, the forward OW, and traffic message signals are adjusted by the respective amplifiers **2925**, **2926** and **2927** to produce the power level adjusted forward APC, OW, and TRCH channels signals. These signals are combined by the adder **2928** and applied to the VAG2 **2914**, which produces forward link RF channel signal.

The forward link RF channel signal including the spread forward APC signal is received by the RF antenna of the SU, and demodulated to produce the forward CDMA signal FMCH. This signal is provided to the variable gain amplifier (VGA3) **2940**. The output signal of VGA3 is applied to the Automatic wax Gain Control Circuit (AGC) **2941** which produces a variable gain amplifier control signal to VGA3 **2940**. This signal maintains the level of the output signal of VGA3 at a near constant level. The output signal of VAG3 **2940** is despread by the despread demux **2942**, which produces a despread user message signal SUMS and a reverse APC bit. The reverse APC bit is applied to the integrator **2943** which produces the Reverse APC control signal. This reverse APC control signal is provided to the Reverse APC VGA4 **2944** to maintain the Reverse link RF channel signal at a minimum power level.

The despread user message signal SUMS is also applied to the power measurement circuit **2945** producing a power measurement signal, which is added to the complement of threshold value S2 in the adder **2946** to produce error signal ES3. The signal ES3 is an error signal relating to the RCS transmit power level for the particular SU. To obtain threshold S2, the despread noise power indication from the AUX despreader is multiplied by 1 plus the desired signal to noise ratio SNR_R. The AUX despreader despreads the input data using an uncorrelated spreading code, hence its output is an indication of the despread noise power.

Similarly, the control signal for the VGA3 is applied to the rate scaling circuit to reduce the rate of the control signal for VGA3 in order to produce a scaled received power level RP1 (see FIG. **29**). The threshold compute circuit computes the received signal threshold RST from the SU measured power signal SUUSR. The complement of the scaled received power level RP1 and the received signal threshold RST are applied to the adder which produces error signal ES4. This error is related to the RCS transmit power to all other SUs. The input error signals ES3 and ES4 are combined in the combiner and input to the delta modulator DM2 **2947**. The output signal of DM2 **2947** is the forward APC bit stream signal, with bits having value of value +1 or −1. In the exemplary embodiment of the present invention, this signal is transmitted as a 64 kb/sec signal.

The Forward APC bit stream signal is applied to the spreading circuit **2948**, to produce the output reverse spread-spectrum APC signal. Reverse OW and Traffic signals are also input to spreading circuits **2949**, **2950**, producing reverse OW and traffic message signals **1**, **2**, . . . N, and the reverse pilot is generated by the reverse pilot generator **2951**. The power level of the reverse APC message signal, reverse OW message signal, reverse pilot, and the reverse traffic message signals are adjusted by amplifiers **2952**, **2953**, **2954**, **2955** to produce the signals which are combined by the adder **2956** and input to the reverse APC VGA4 **2944**. It is this VGA4 **2944** which produces the reverse link RF channel signal.

During the call connection and bearer channel establishment process, the closed loop power control of the present invention is modified, and is shown in FIG. **30**. As shown, the circuits used to adjust the transmitted power are different for the RCS, shown as the Initial RCS power control module **3001**; and for the SU, shown as the Initial SU power control module **3002**. Beginning with the Initial RCS power control module **3001**, the reverse link RF channel signal is received at the RF antenna and demodulated producing the reverse CDMA signal IRMCH which is received by the first variable gain amplifier (VGA1) **3003**. The output signal of VGA1 is detected by the Automatic Gain Control Circuit (AGC1) **3004** which provides a variable gain amplifier control signal to VGA1 **3003** to maintain the level of the output signal of VAG1 at a near constant value. The output signal of VGA1 is despread by the despread demultiplexer **3005**, which produces a despread user message signal IMS. The Forward APC control signal, ISET, is set to a fixed value, and is applied to the Forward Link Variable Gain Amplifier (VGA2) **3006** to set the Forward Link RF channel signal at a predetermined level.

The signal power of the despread user message signal IMS of the Initial RCS power module **3001** is measured by the power measure circuit **3007**, and the output power measurement is subtracted from a threshold value S3 in the subtracter **3008** to produce error signal ES5, which is an error signal relating to the transmit power level of a particular SU. The threshold S3 is calculated by multiplying the despread power measurement obtained from the AUX despreader by 1 plus the desired signal to noise ratio SNR_R. The AUX despreader despreads the signal using an uncorrelated spreading code, hence its output signal is an indication of despread noise power. Similarly, the VGA1 control signal is applied to the rate scaling circuit **3009** to reduce the rate of the VGA1 control signal in order to produce a scaled system power level signal SP2. The threshold computation logic **3010** determines an Initial System Signal Threshold value (ISST) computed from the user channel power data signal (IRCSUSR). The complement of the Scaled system power level signal SP2 and the ISST are provided to the adder **3011** which produces a second error signal ES6, which

is an error signal relating to the system transmit power level of all active SUs. The value of ISST is the desired transmit power for a system having the particular configuration. The input Error signals ES5 and ES6 are combined in the combiner **3012** produce a combined error signal input to the delta modulator (DM3) **3013**. DM3 produces the initial reverse APC bit stream signal, having bits of value +1 or −1, which in the exemplary embodiment is transmitted as a 64 kb/s signal.

The Reverse APC bit stream signal is applied to the spreading circuit **3014**, to produce the initial spread-spectrum forward APC signal. The CTCH information is spread by the spreader **3016** to form the spread CTCH message signal. The spread APC and CTCH signals are scaled by the amplifiers **3015** and **3017**, and combined by the combiner **3018**. The combined signal is applied to VAG2 **3006**, which produces the forward link RF channel signal.

The forward link RF channel signal including the spread forward APC signal is received by the RF antenna of the SU and demodulated to produce the initial forward CDMA signal (IFMCH) which is applied to the variable gain amplifier (VGA3) **3020**. The output signal of VGA3 is detected by the Automatic Gain Control Circuit (AGC2) **3021** which produces a variable gain amplifier control signal for the VGA3 **3020**. This signal maintains the output power level of the VGA3 **3020** at a near constant value. The output signal of VAG3 is despread by the despread demultiplexer **3022**, which produces an initial reverse APC bit that is dependent on the output level of VGA3. The reverse APC bit is processed by the integrator **3023** to produce the Reverse APC control signal. The Reverse APC control signal is provided to the Reverse APC VGA4 **3024** to maintain Reverse link RF channel signal at a defined power level.

The global channel AXCH signal is spread by the spreading circuits **3025** to provide the spread AXCH channel signal. The reverse pilot generator **3026** provides a reverse pilot signal, and the signal power of AXCH and the reverse pilot signal are adjusted by the respective amplifiers **3027** and **3028**. The spread AXCH channel signal and the reverse pilot signal are summed by the adder **3029** to produce reverse link CDMA signal. The reverse link CDMA signal is received by the reverse APC VGA4 **3024**, which produces the reverse link RF channel signal output to the RF transmitter.

System Capacity Management

The system capacity management algorithm of the present invention optimizes the maximum user capacity for an RCS area, called a cell. When the SU comes within a certain value of maximum transmit power, the SU sends an alarm message to the RCS. The RCS sets the traffic lights which control access to the system, to "red" which, as previously described, is a flag that inhibits access by the SU's. This condition remains in effect until the call to the alarming SU terminates, or until the transmit power of the alarming SU, measured at the SU, is a value less than the maximum transmit power. When multiple SUs send alarm messages, the condition remains in effect until either all calls from alarming SUs terminate, or until the transmit power of the alarming SU, measured at the SU, is less than the maximum transmit power. An alternative embodiment monitors the bit error rate measurements from the FEC decoder, and holds the RCS traffic lights at "red" until the bit error rate is less than a predetermined value.

The blocking strategy of the present invention includes a method which uses the power control information transmitted from the RCS to an SU, and the received power measurements at the RCS. The RCS measures its transmit power level, detects that a maximum value is reached, and determines when to block new users. An SU preparing to enter the system blocks itself if the SU reaches the maximum transmit power before successful completion of a bearer channel assignment.

Each additional user in the system has the effect of increasing the noise level for all other users, which decreases the signal to noise ratio (SNR) that each user experiences. The power control algorithm maintains a desired SNR for each user. Therefore, in the absence of any other limitations, addition of a new user into the system has only a transient effect and the desired SNR is regained.

The transmit power measurement at the RCS is done by measuring either the root mean square (rms) value of the baseband combined signal or by measuring the transmit power of the RF signal and feeding it back to digital control circuits. The transmit power measurement may also be made by the SUs to determine if the unit has reached its maximum transmit power. The SU transmit power level is determined by measuring the control signal of the RF amplifier, and scaling the value based on the service type, such as POTS, FAX, or ISDN.

The information that an SU has reached the maximum power is transmitted to the RCS by the SU in a message on the Assigned Channels. The RCS also determines the condition by measuring reverse APC changes because, if the RCS sends APC messages to the SU to increase SU transmit power, and the SU transmit power measured at the RCS is not increased, the SU has reached the maximum transmit power.

The RCS does not use traffic lights to block new users who have finished ramping-up using the short codes. These users are blocked by denying them the dial tone and letting them time out. The RCS sends all 1's (go down commands) on the APC Channel to make the SU lower its transmit power. The RCS also sends either no CTCH message or a message with an invalid address which would force the FSU to abandon the access procedure and start over. The SU, however, does not start the acquisition process immediately because the traffic lights are red.

When the RCS reaches its transmit power limit, it enforces blocking in the same manner as when an SU reaches its transmit power limit. The RCS turns off all the traffic lights on the FBCH, starts sending all 1 APC bits (go down commands) to those users who have completed their short code ramp-up but have not yet been given a dial tone, and either sends no CTCH message to these users or sends messages with invalid addresses to force them to abandon the access process.

The self blocking process of the SU is as follows. When the SU starts transmitting the AXCH, the APC starts its power control operation using the AXCH and the SU transmit power increases. While the transmit power is increasing under the control of the APC, it is monitored by the SU controller. If the transmit power limit is reached, the SU abandons the access procedure and starts over.

System Synchronization

The RCS is synchronized either to the PSTN Network Clock signal through one of the Line interfaces, as shown in FIG. **10**, or to the RCS system clock oscillator, which free-runs to provide a master timing signal for the system. The Global Pilot Channel, and therefore all Logical channels within the CDMA channel, are synchronized to the system

clock signal of the RCS. The Global Pilot (GLPT) is transmitted by the RCS and defines the timing at the RCS transmitter.

The SU receiver is synchronized to the GLPT, and so behaves as a slave to the Network Clock oscillator. However, the SU timing is retarded by the propagation delay. In the present embodiment of the invention, the SU modem to extracts a 64 KHz and 8 KHz clock signal from the CDMA RF Receive channel, and a PLL oscillator circuit creates 2 MHz and 4 MHz clock signals

The SU transmitter and hence the LAXPT or ASPT are slaved to the timing of the SU receiver.

The RCS receiver is synchronized to the LAXPT or the ASPT transmitted by the SU, however, its timing may be retarded by the propagation delay. Hence, the timing of the RCS receiver is that of the RCS transmitter retarded by twice the propagation delay.

Furthermore, the system can be synchronized via a reference received from a Global Positioning System receiver (GPS). In a system of this type, a GPS receiver in each RCS provides a reference clock signal to all submodules of the RCS. Because each RCS receives the same time reference from the GPS, all of the system clock signals in all of the RCSs are synchronized.

Although the invention has been described in terms of multiple exemplary embodiments, it is understood by those skilled in the art that the invention may be practiced with modifications to the embodiments that are within the scope of the invention as defined by the following claims.

APPENDIX A

0	75	150	225	300	375	450	525	600	675	750	825
1	76	151	226	301	376	451	526	601	676	751	826
2	77	152	227	302	377	452	527	602	677	752	827
3	78	153	228	303	378	453	528	603	678	753	828
4	79	154	229	304	379	454	529	604	679	754	829
5	80	155	230	305	380	455	530	605	680	755	830
6	81	156	231	306	381	456	531	606	681	756	831
7	82	157	232	307	382	457	532	607	682	757	832
8	83	158	233	308	383	458	533	608	683	758	833
9	84	159	234	309	384	459	534	609	684	759	834
10	85	160	235	310	385	460	535	610	685	760	835
11	86	161	236	311	386	461	536	611	686	761	836
12	87	162	237	312	387	462	537	612	687	762	837
13	88	163	238	313	388	463	538	613	688	763	838
14	89	164	239	314	389	464	539	614	689	764	839
15	90	165	240	315	390	465	540	615	690	765	840
16	91	166	241	316	391	466	541	616	691	766	841
17	92	167	242	317	392	467	542	617	692	767	842
18	93	168	243	318	393	468	543	618	693	768	843
19	94	169	244	319	394	469	544	619	694	769	844
20	95	170	245	320	395	470	545	620	695	770	845
21	96	171	246	321	396	471	546	621	696	771	846
22	97	172	247	322	397	472	547	622	697	772	847
23	98	173	248	323	398	473	548	623	698	773	848
24	99	174	249	324	399	474	549	624	699	774	849
25	100	175	250	325	400	475	550	625	700	775	850
26	101	176	251	326	401	476	551	626	701	776	851
27	102	177	252	327	402	477	552	627	702	777	852
28	103	178	253	328	403	478	553	628	703	778	853
29	104	179	254	329	404	479	554	629	704	779	854
30	105	180	255	330	405	480	555	630	705	780	855
31	106	181	256	331	406	481	556	631	706	781	856
32	107	182	257	332	407	482	557	632	707	782	857
33	108	183	258	333	408	483	558	633	708	783	858
34	109	184	259	334	409	484	559	634	709	784	859
35	110	185	260	335	410	485	560	635	710	785	860
36	111	186	261	336	411	486	561	636	711	786	861
37	112	187	262	337	412	487	562	637	712	787	862
38	113	188	263	338	413	488	563	638	713	788	863
39	114	189	264	339	414	489	564	639	714	789	864
40	115	190	265	340	415	490	565	640	715	790	865
41	116	191	266	341	416	491	566	641	716	791	866
42	117	192	267	342	417	492	567	642	717	792	867
43	118	193	268	343	418	493	568	643	718	793	868
44	119	194	269	344	419	494	569	644	719	794	869
45	120	195	270	345	420	495	570	645	720	795	870
46	121	196	271	346	421	496	571	646	721	796	871
47	122	197	272	347	422	497	572	647	722	797	872
48	123	198	273	348	423	498	573	648	723	798	873
49	124	199	274	349	424	499	574	649	724	799	874
50	125	200	275	350	425	500	575	650	725	800	875
51	126	201	276	351	426	501	576	651	726	801	876
52	127	202	277	352	427	502	577	652	727	802	877
53	128	203	278	353	428	503	578	653	728	803	878
54	129	204	279	354	429	504	579	654	729	804	879
55	130	205	280	355	430	505	580	655	730	805	880
56	131	206	281	356	431	506	581	656	731	806	881
57	132	207	282	357	432	507	582	657	732	807	882

-continued

APPENDIX A

58	133	208	283	358	433	508	583	658	733	808	883
59	134	209	284	359	434	509	584	659	734	809	884
60	135	210	285	360	435	510	585	660	735	810	885
61	136	211	286	361	436	511	586	661	736	811	886
62	137	212	287	362	437	512	587	662	737	812	887
63	138	213	288	363	438	513	588	663	738	813	888
64	139	214	289	364	439	514	589	664	739	814	889
65	140	215	290	365	440	515	590	665	740	815	890
66	141	216	291	366	441	516	591	666	741	816	891
67	142	217	292	367	442	517	592	667	742	817	892
68	143	218	293	368	443	518	593	668	743	818	893
69	144	219	294	369	444	519	594	669	744	819	894
70	145	220	295	370	445	520	595	670	745	820	895
71	146	221	296	371	446	521	596	671	746	821	896
72	147	222	297	372	447	522	597	672	747	822	897
73	148	223	298	373	448	523	598	673	748	823	898
74	149	224	299	374	449	524	599	674	749	824	899
900	975	1050	2227	2302	2377	2452	2527	2602	2677	2752	2827
901	976	1051	2228	2303	2378	2453	2528	2603	2678	2753	2828
902	977	1052	2229	2304	2379	2454	2529	2604	2679	2754	2929
903	973	1053	2230	2305	2380	2455	2530	2605	2680	2755	2830
904	979	1054	2231	2306	2381	2456	2531	2606	2681	2756	2831
905	980	1055	2232	2307	2382	2457	2532	2607	2682	2757	2832
906	981	1056	2233	2308	2383	2458	2533	2608	2683	2758	2833
907	982	1057	2234	2309	2384	2459	2534	2609	2684	2759	2834
908	983	1058	2235	2310	2385	2460	2535	2610	2685	2760	2835
909	984	1059	2236	2311	2386	2461	2536	2611	2686	2761	2836
910	985	1060	2237	2312	2387	2462	2537	2612	2687	2762	2837
911	986	1061	2238	2313	2388	2463	2538	2613	2688	2763	2838
912	987	1062	2239	2314	2389	2464	2539	2614	2689	2764	2839
913	988	1063	2240	2315	2390	2465	2540	2615	2690	2765	2840
914	989	1064	2241	2316	2391	2466	2541	2616	2691	2766	2841
915	990	1065	2242	2317	2392	2467	2542	2617	2692	2767	2842
916	991	1066	2243	2318	2393	2468	2543	2618	2693	2768	2843
917	992	1067	2244	2319	2394	2469	2544	2619	2694	2769	2844
918	993	1068	2245	2320	2395	2470	2545	2620	2695	2770	2845
919	994	1069	2246	2321	2396	2471	2546	2621	2696	2771	2846
920	995	1070	2247	2322	2397	2472	2547	2622	2697	2772	2847
921	996	1071	2248	2323	2398	2473	2548	2623	2698	2773	2848
922	997	1072	2249	2324	2399	2474	2549	2624	2699	2774	2849
923	998	1073	2250	2325	2400	2475	2550	2625	2700	2775	2850
924	999	1074	2251	2326	2401	2476	2551	2626	2701	2776	2851
925	1000	1075	2252	2327	2402	2477	2552	2627	2702	2777	2852
926	1001	1076	2253	2328	2403	2478	2553	2628	2703	2778	2853
927	1002	1077	2254	2329	2404	2479	2554	2629	2704	2779	2854
928	1003	1078	2255	2330	2405	2480	2555	2630	2705	2780	2855
929	1004	1079	2256	2331	2406	2481	2556	2631	2706	2781	2856
930	1005	1080	2257	2332	2407	2482	2557	2632	2707	2782	2857
931	1006	1081	2258	2333	2408	2483	2558	2633	2708	2783	2858
932	1007	1082	2259	2334	2409	2484	2559	2634	2709	2784	2859
933	1008	1083	2260	2335	2410	2485	2560	2635	2710	2785	2860
934	1009	1084	2261	2336	2411	2486	2561	2636	2711	2786	2861
935	1010	1085	2262	2337	2412	2487	2562	2637	2712	2787	2862
936	1011	1086	2263	2338	2413	2488	2563	2638	2713	2788	2863
937	1012	1087	2264	2339	2414	2489	2564	2639	2714	2789	2864
938	1013	1088	2265	2340	2415	2490	2565	2640	2715	2790	2865
939	1014	1089	2266	2341	2416	2491	2566	2641	2716	2791	2866
940	1015	1090	2267	2342	2417	2492	2567	2642	2717	2792	2867
941	1016	1091	2268	2343	2418	2493	2568	2643	2718	2793	2868
942	1017	1092	2269	2344	2419	2494	2569	2644	2719	2794	2869
943	1018	1093	2270	2345	2420	2495	2570	2645	2720	2795	2870
944	1019	1094	2271	2346	2421	2496	2571	2646	2721	2796	2871
945	1020	1095	2272	2347	2422	2497	2572	2647	2722	2797	2872
946	1021	1096	2273	2348	2423	2498	2573	2648	2723	2798	2873
947	1022	1097	2274	2349	2424	2499	2574	2649	2724	2799	2874
948	1023	1098	2275	2350	2425	2500	2575	2650	2725	2800	2875
949	1024	1099	2276	2351	2426	2501	2576	2651	2726	2801	2876
950	1025	1100	2277	2352	2427	2502	2577	2652	2727	2802	2877
951	1026	1101	2278	2353	2428	2503	2578	2653	2728	2803	2878
952	1027	2204	2279	2354	2429	2504	2579	2654	2729	2804	2879
953	1028	2205	2280	2355	2430	2505	2580	2655	2730	2805	2880
954	1029	2206	2281	2356	2431	2506	2581	2656	2731	2806	2881
955	1030	2207	2282	2357	2432	2507	2582	2657	2732	2807	2882
956	1031	2208	2283	2358	2433	2508	2583	2658	2733	2808	2883
957	1032	2209	2284	2359	2434	2509	2584	2659	2734	2809	2884
958	1033	2210	2285	2360	2435	2510	2585	2660	2735	2810	2885
959	1034	2211	2286	2361	2436	2511	2586	2661	2736	2811	2886

-continued

APPENDIX A

960	1035	2212	2287	2362	2437	2512	2587	2662	2737	2812	2887
961	1036	2213	2288	2363	2438	2513	2588	2663	2738	2813	2888
962	1037	2214	2289	2364	2439	2514	2589	2664	2739	2814	2889
963	1038	2215	2290	2365	2440	2515	2590	2665	2740	2815	2890
964	1039	2216	2291	2366	2441	2516	2591	2666	2741	2816	2891
965	1040	2217	2292	2367	2442	2517	2592	2667	2742	2817	2892
966	1041	2218	2293	2368	2443	2518	2593	2668	2743	2818	2893
967	1042	2219	2294	2369	2444	2519	2594	2669	2744	2819	2894
968	1043	2220	2295	2370	2445	2520	2595	2670	2745	2820	2895
969	1044	2221	2296	2371	2446	2521	2596	2671	2746	2821	2896
970	1045	2222	2297	2372	2447	2522	2597	2672	2747	2822	2897
971	1046	2223	2298	2373	2448	2523	2598	2673	2748	2823	2898
972	1047	2224	2299	2374	2449	2524	2599	2674	2749	2824	2899
973	1048	2225	2300	2375	2450	2525	2600	2675	2750	2825	2900
974	1049	2226	2301	2376	2451	2526	2601	2676	2751	2826	2901
2902	2977	3052	3127	3202	3277	4454	4529	4604	4679	4754	4829
2903	2978	3053	3128	3203	3278	4455	4530	4605	4680	4755	4830
2904	2979	3054	3129	3204	3279	4456	4531	4606	4681	4756	4831
2905	2980	3055	3130	3205	3280	4457	4532	4607	4682	4757	4832
2906	2981	3056	3131	3206	3281	4458	4533	4608	4683	4758	4833
2907	2982	3057	3132	3207	3282	4459	4534	4609	4684	4759	4834
2908	2983	3058	3133	3208	3283	4460	4535	4610	4685	4760	4835
2909	2984	3059	3134	3209	3284	4461	4536	4611	4686	4761	4836
2910	2985	3060	3135	3210	3285	4462	4537	4612	4687	4762	4837
2911	2986	3061	3136	3211	3286	4463	4538	4613	4688	4763	4838
2912	2987	3062	3137	3212	3287	4464	4539	4614	4689	4764	4839
2913	2988	3063	3138	3213	3288	4465	4540	4615	4690	4765	4840
2914	2989	3064	3139	3214	3289	4466	4541	4616	4691	4766	4841
2915	2990	3065	3140	3215	3290	4467	4542	4617	4692	4767	4842
2916	2991	3066	3141	3216	3291	4468	4543	4618	4693	4768	4843
2917	2992	3067	3142	3217	3292	4469	4544	4619	4694	4769	4844
2918	2993	3068	3143	3218	3293	4470	4545	4620	4695	4770	4845
2919	2994	3069	3144	3219	3294	4471	4546	4621	4696	4771	4846
2920	2995	3070	3145	3220	3295	4472	4547	4622	4697	4772	4847
2921	2996	3071	3146	3221	3296	4473	4548	4623	4698	4773	4848
2922	2997	3072	3147	3222	3297	4474	4549	4624	4699	4774	4849
2923	2998	3073	3148	3223	3298	4475	4550	4625	4700	4775	4850
2924	2999	3074	3149	3224	3299	4476	4551	4626	4701	4776	4851
2925	3000	3075	3150	3225	3300	4477	4552	4627	4702	4777	4852
2926	3001	3076	3151	3226	3301	4478	4553	4628	4703	4778	4853
2927	3002	3077	3152	3227	3302	4479	4554	4629	4704	4779	4854
2928	3003	3078	3153	3228	3303	4480	4555	4630	4705	4780	4855
2929	3004	3079	3154	3229	3304	4481	4556	4631	4706	4781	4856
2930	3005	3080	3155	3230	3305	4482	4557	4632	4707	4782	4857
2931	3006	3081	3156	3231	4408	4483	4558	4633	4708	4783	4858
2932	3007	3082	3157	3232	4409	4484	4559	4634	4709	4784	4859
2933	3008	3083	3158	3233	4410	4485	4560	4635	4710	4785	4860
2934	3009	3084	3159	3234	4411	4486	4561	4636	4711	4786	4861
2935	3010	3085	3160	3235	4412	4487	4562	4637	4712	4787	4862
2936	3011	3086	3161	3236	4413	4488	4563	4638	4713	4788	4863
2937	3012	3087	3162	3237	4414	4489	4564	4639	4714	4789	4864
2938	3013	3088	3163	3238	4415	4490	4565	4640	4715	4790	4865
2939	3014	3089	3164	3239	4416	4491	4566	4641	4716	4791	4866
2940	3015	3090	3165	3240	4417	4492	4567	4642	4717	4792	4867
2941	3016	3091	3166	3241	4418	4493	4568	4643	4718	4793	4868
2942	3017	3092	3167	3242	4419	4494	4569	4644	4719	4794	4869
2943	3018	3093	3168	3243	4420	4495	4570	4645	4720	4795	4870
2944	3019	3094	3169	3244	4421	4496	4571	4646	4721	4796	4871
2945	3020	3095	3170	3245	4422	4497	4572	4647	4722	4797	4872
2946	3021	3096	3171	3246	4423	4498	4573	4648	4723	4798	4873
2947	3022	3097	3172	3247	4424	4499	4574	4649	4724	4799	4874
2948	3023	3098	3173	3248	4425	4500	4575	4650	4725	4800	4875
2949	3024	3099	3174	3249	4426	4501	4576	4651	4726	4801	4876
2950	3025	3100	3175	3250	4427	4502	4577	4652	4727	4802	4877
2951	3026	3101	3176	3251	4428	4503	4578	4653	4728	4803	4878
2952	3027	3102	3177	3252	4429	4504	4579	4654	4729	4804	4879
2953	3028	3103	3178	3253	4430	4505	4580	4655	4730	4805	4880
2954	3029	3104	3179	3254	4431	4506	4581	4656	4731	4806	4881
2955	3030	3105	3180	3255	4432	4507	4582	4657	4732	4807	4882
2956	3031	3106	3181	3256	4433	4508	4583	4658	4733	4808	4883
2957	3032	3107	3182	3257	4434	4509	4584	4659	4734	4809	4884
2958	3033	3108	3183	3258	4435	4510	4585	4660	4735	4810	4885
2959	3034	3109	3184	3259	4436	4511	4586	4661	4736	4811	4886
2960	3035	3110	3185	3260	4437	4512	4587	4662	4737	4812	4887
2961	3036	3111	3186	3261	4438	4513	4588	4663	4738	4813	4888
2962	3037	3112	3187	3262	4439	4514	4589	4664	4739	4814	4889
2963	3038	3113	3188	3263	4440	4515	4590	4665	4740	4815	4890

-continued

APPENDIX A

2964	3039	3114	3189	3264	4441	4516	4591	4666	4741	4816	4891
2965	3040	3115	3190	3265	4442	4517	4592	4667	4742	4817	4892
2966	3041	3116	3191	3266	4443	4518	4593	4678	4743	4818	4893
2967	3042	3117	3192	3267	4444	4519	4594	4679	4744	4819	4894
2968	3043	3118	3193	3268	4445	4520	4595	4680	4745	4820	4895
2969	3044	3119	3194	3269	4446	4521	4596	4681	4746	4821	4896
2970	3045	3120	3195	3270	4447	4522	4597	4682	4747	4822	4897
2971	3046	3121	3196	3271	4448	4523	4598	4683	4748	4823	4898
2972	3047	3122	3197	3272	4449	4524	4599	4684	4749	4824	4899
2973	3048	3123	3198	3273	4450	4525	4600	4685	4750	4825	4900
2974	3049	3124	3199	3274	4451	4526	4601	4686	4751	4826	4901
2975	3050	3125	3200	3275	4452	4527	4602	4687	4752	4827	4902
2976	3051	3126	3201	3276	4453	4528	4603	4688	4753	4828	4903
4904	4979	5054	5129	5204	5279	5354	5429	5504	6681	6756	6831
4905	4980	5055	5130	5205	5280	5355	5430	5505	6682	6757	6832
4906	4981	5056	5131	5206	5281	5356	5431	5506	6683	6758	6833
4907	4982	5057	5132	5207	5282	5357	5432	5507	6684	6759	6834
4908	4983	5058	5133	5208	5283	5358	5433	5508	6685	6760	6835
4909	4984	5059	5134	5209	5284	5359	5434	5509	6686	6761	6836
4910	4985	5060	5135	5210	5285	5360	5435	6612	6687	6762	6837
4911	4986	5061	5136	5211	5286	5361	5436	6613	6688	6763	6838
4912	4987	5062	5137	5212	5287	5362	5437	6614	6689	6764	6839
4913	4988	5063	5138	5213	5288	5363	5438	6615	6690	6765	6840
4914	4989	5064	5139	5214	5289	5364	5439	6616	6691	6766	6841
4915	4990	5065	5140	5215	5290	5365	5440	6617	6692	6767	6842
4916	4991	5066	5141	5216	5291	5366	5441	6618	6693	6768	6843
4917	4992	5067	5142	5217	5292	5367	5442	6619	6692	6769	6844
4918	4993	5068	5143	5218	5293	5368	5443	6620	6693	6770	6845
4919	4994	5069	5144	5219	5294	5369	5444	6621	6694	6771	6846
4920	4995	5070	5145	5220	5295	5370	5445	6622	6695	6772	6847
4921	4996	5071	5146	5221	5296	5371	5446	6623	6696	6773	6848
4922	4997	5072	5147	5222	5297	5372	5447	6624	6697	6774	6849
4923	4998	5073	5148	5223	5298	5373	5448	6625	6698	6775	6850
4924	4999	5074	5149	5224	5299	5374	5449	6626	6699	6776	6851
4925	5000	5075	5150	5225	5300	5375	5450	6627	6700	6777	6852
4926	5001	5076	5151	5226	5301	5376	5451	6628	6701	6778	6853
4927	5002	5077	5152	5227	5302	5377	5452	6629	6702	6779	6854
4928	5003	5078	5153	5228	5303	5378	5453	6630	6703	6780	6855
4929	5004	5079	5154	5229	5304	5379	5454	6631	6702	6781	6856
4930	5005	5080	5155	5230	5305	5380	5455	6632	6703	6782	6857
4931	5006	5081	5156	5231	5306	5381	5456	6633	6704	6783	6858
4932	5007	5082	5157	5232	5307	5382	5457	6634	6705	6784	6859
4933	5008	5083	5158	5233	5308	5383	5458	6635	6706	6785	6860
4934	5009	5084	5159	5234	5309	5384	5459	6636	6707	6786	6861
4935	5010	5085	5160	5235	5310	5385	5460	6637	6708	6787	6862
4936	5011	5086	5161	5236	5311	5386	5461	6638	6709	6788	6863
4937	5012	5087	5162	5237	5312	5387	5462	6639	6710	6789	6864
4938	5013	5088	5163	5238	5313	5388	5463	6640	6711	6790	6865
4939	5014	5089	5164	5239	5314	5389	5464	6641	6712	6791	6866
4940	5015	5090	5165	5240	5315	5390	5465	6642	6713	6792	6867
4941	5016	5091	5166	5241	5316	5391	5466	6643	6712	6793	6868
4942	5017	5092	5167	5242	5317	5392	5467	6644	6713	6794	6869
4943	5018	5093	5168	5243	5318	5393	5468	6645	6714	6795	6870
4944	5019	5094	5169	5244	5319	5394	5469	6646	6715	6796	6871
4945	5020	5095	5170	5245	5320	5395	5470	6647	6716	6797	6872
4946	5021	5096	5171	5246	5321	5396	5471	6648	6717	6798	6873
4947	5022	5097	5172	5247	5322	5397	5472	6649	6718	6799	6874
4948	5023	5098	5173	5248	5323	5398	5473	6650	6719	6800	6875
4949	5024	5099	5174	5249	5324	5399	5474	6651	6720	6801	6876
4950	5025	5100	5175	5250	5325	5400	5475	6652	6721	6802	6877
4951	5026	5101	5176	5251	5326	5401	5476	6653	6722	6803	6878
4952	5027	5102	5177	5252	5327	5402	5477	6654	6723	6804	6879
4953	5028	5103	5178	5253	5328	5403	5478	6655	6722	6805	6880
4954	5029	5104	5179	5254	5329	5404	5479	6656	6723	6806	6881
4955	5030	5105	5180	5255	5330	5405	5480	6657	6724	6807	6882
4956	5031	5106	5181	5256	5331	5406	5481	6658	6725	6808	6883
4957	5032	5107	5182	5257	5332	5407	5482	6659	6726	6809	6884
4958	5033	5108	5183	5258	5333	5408	5483	6660	6727	6810	6885
4959	5034	5109	5184	5259	5334	5409	5484	6661	6728	6811	6886
4960	5035	5110	5185	5260	5335	5410	5485	6662	6729	6812	6887
4961	5036	5111	5186	5261	5336	5411	5486	6663	6730	6813	6888
4962	5037	5112	5187	5262	5337	5412	5487	6664	6731	6814	6889
4963	5038	5113	5188	5263	5338	5413	5488	6665	6732	6815	6890
4964	5039	5114	5189	5264	5339	5414	5489	6666	6733	6816	6891
4965	5040	5115	5190	5265	5340	5415	5490	6667	6732	6817	6892
4966	5041	5116	5191	5266	5341	5416	5491	6668	6733	6818	6893
4967	5042	5117	5192	5267	5342	5417	5492	6669	6734	6819	6894

-continued

APPENDIX A

4968	5043	5118	5193	5268	5343	5418	5493	6670	6735	6820	6895
4969	5044	5119	5194	5269	5344	5419	5494	6671	6736	6821	6896
4970	5045	5120	5195	5270	5345	5420	5495	6672	6737	6822	6897
4971	5046	5121	5196	5271	5346	5421	5496	6673	6738	6823	6898
4972	5047	5122	5197	5272	5347	5422	5497	6674	6739	6824	6899
4973	5048	5123	5198	5273	5348	5423	5498	6675	6740	6825	6900
4974	5049	5124	5199	5274	5349	5424	5499	6676	6741	6826	6901
4975	5050	5125	5200	5275	5350	5425	5500	6677	6742	6827	6902
4976	5051	5126	5201	5276	5351	5426	5501	6678	6743	6828	6903
4977	5052	5127	5202	5277	5352	5427	5502	6679	6742	6829	6904
4978	5053	5128	5203	5278	5353	5428	5503	6680	6743	6830	6905
6906	6930	6954	6978	7002	7026	7050	7074	7098	7122	7146	7170
6907	6931	6955	6979	7003	7027	7051	7075	7099	7123	7147	7171
6908	6932	6956	6980	7004	7028	7052	7076	7100	7124	7148	7172
6909	6933	6957	6981	7005	7029	7053	7077	7101	7125	7149	7173
6910	6934	6958	6982	7006	7030	7054	7078	7102	7126	7150	7174
6911	6935	6959	6983	7007	7031	7055	7079	7103	7127	7151	7175
6912	6936	6960	6984	7008	7032	7056	7080	7104	7128	7152	7176
6913	6937	6961	6985	7009	7033	7057	7081	7105	7129	7153	7177
6914	6938	6962	6986	7010	7034	7058	7082	7106	7130	7154	7178
6915	6939	6963	6987	7011	7035	7059	7083	7107	7131	7155	7179
6916	6940	6964	6988	7012	7036	7060	7084	7108	7132	7156	7180
6917	6941	6965	6989	7013	7037	7061	7085	7109	7133	7157	7181
6918	6942	6966	6990	7014	7038	7062	7086	7110	7134	7158	7182
6919	6943	6967	6991	7015	7039	7063	7087	7111	7133	7159	7183
6920	6944	6968	6992	7016	7040	7064	7088	7112	7134	7160	7184
6921	6945	6969	6993	7017	7041	7065	7089	7113	7135	7161	
6922	6946	6970	6994	7018	7042	7066	7090	7114	7136	7162	
6923	6947	6971	6995	7019	7043	7067	7091	7115	7137	7163	
6924	6948	6972	6996	7020	7044	7068	7092	7116	7138	7164	
6925	6949	6973	6997	7021	7045	7069	7093	7117	7139	7165	
6926	6950	6974	6998	7022	7046	7070	7094	7118	7140	7166	
6927	6951	6975	6999	7023	7047	7071	7095	7119	7141	7167	
6928	6952	6976	7000	7024	7048	7072	7096	7120	7142	7168	
6929	6953	6977	7001	7025	7049	7073	7097	7121	7143	7169	

The invention claimed is:

1. A multiple access, spread-spectrum communication system for processing a plurality of telecommunication information signals received simultaneously for simultaneous transmission over a radio frequency (RF) channel as a code-division-multiplexed (CDM) signal, the system comprising:

means for receiving a call request signal corresponding to a telecommunication line information signal, and a user identification signal identifying a user to which the call request and information signal are addressed;

a plurality of modem processing means, one of the plurality of modem processing means providing a global pilot code signal, and each of the modem processing means providing a respective message code signal and combining one of the plurality of information signals with the respective message code signal to provide a spread-spectrum processed message signal, the plurality of message code signals of the plurality of modem processing means being synchronized to the global pilot code signal;

assignment means responsive to a channel assignment signal for coupling the information signals received on the telecommunication lines to respective indicated ones of the plurality of modem means;

a system channel controller, coupled to a remote call-processing means and responsive to the user identification signal, for providing the channel assignment signal; and

an RF transmitter means, connected to each of the plurality of modem processing means, for combining the plurality of spread-spectrum processed message signals with the global pilot code signal to generate a CDM signal; for modulating a carrier signal with the CDM signal and for transmitting the modulated carrier signal through an RF communication channel.

2. The multiple-access spread-spectrum communication system of claim **1**, wherein one of the plurality of modem processing means further comprises:

a) code generation means comprising a generic pilot code means providing a pilot code signal, and a message means for generating a plurality of message code signals; and

b) spreading means coupled to the message means for combining each of the information signals, user identification signals, and call type signals with a respective one of the plurality of message code signals to generate a plurality of spread-spectrum processed message signals.

3. The multiple access spread-spectrum-communication system of claim **2**, wherein:

the generic pilot code means provides the global pilot code signal, and the message means is responsive to a timing signal which is synchronous with the global pilot code signal, such that each of the plurality of message code signals of the plurality of modem processing means is synchronous with the global pilot code signal.

4. The multiple access spread-spectrum communication system of claim **1**, wherein:

each of the plurality of information signals has several different channel rates; and

each of the plurality of message code signals supports a pre-determined information channel rate;

and the system further comprises:

remote call-processing means for providing a call type signal corresponding to the information signal rate for each of the information signals; and information channel mode modification means, connected to the system channel controller and to the plurality of modem means and responsive to the call type signal, for changing the combination of the information signals and the respective message code signal to another pre-determined one of the message code signals to support a different information channel rate for the message signal.

5. A subscriber unit for a multiple access, spread-spectrum communication system that receives and processes a code-division multiplexed (CDM) signal which modulates a carrier signal in a radio frequency (RF) channel to reconstruct a transmitted information signal assigned to a subscriber comprising:

receiving means for receiving the modulated carrier signal from the RF channel and for demodulating the CDM signal from the carrier signal;

a subscriber unit controller;

modem processing means comprising:

a) global pilot code acquisition means comprising a global pilot code generation means for providing a global pilot code signal; a plurality of global pilot code-phase delayed correlation means for correlating the global pilot code signal with the CDM signal to produce a despread global pilot code signal, the code phase of the global pilot signal being changed responsive to an acquisition signal; and means for determining whether the despread global pilot signal is present to produce an acquisition signal;

b) a plurality of message code generators which produce a plurality of message code signals synchronized to the global pilot code signal; and

c) global pilot code tracking means for producing an error signal responsive to the acquisition signal;

d) means for adjusting the global pilot code signal in phase, responsive to the error signal in a sense to produce the acquisition signal which corresponds to an increased level of the despread global pilot signal; and

e) a plurality of message signal acquisition means for providing a plurality of despread receive message signals, each acquisition means including a plurality of message signal correlators, each message signal correlator correlating a respective one of the message code signals with the CDM signal to produce a respective despread receive message signal.

6. The subscriber unit of claim **5**, wherein:

the signal from the radio frequency (RF) channel includes a user identification signal and the call type signal each associated with the information signal and assigned to a subscriber unit.

7. The subscriber unit of claim **6**, wherein:

the despread message signals include the user identification signal and the call type signal; and

the subscriber controller is responsive to the user identification signal to provide the call type signal for the received information signal and the despread information signal to the local subscriber.

8. The subscriber unit of claim **5**, wherein:

one of the despread receive message signals includes an information signal and a message type signal corresponding to the information signal rate of one of the information signals; and the subscriber unit further comprises:

information channel mode modification means responsive to the message type signal received with the despread receive message signal for changing a received information signal from a first message code to a second pre-determined message code which second message code supports a different despread information channel rate than the first message code; and

signal conversion means responsive to the message type signal for selectively converting the despread information signal into a sampled data digital signal.

9. A multiple access, spread-spectrum communication system according to claim **1**, wherein the global pilot code signal and each message code signal are generated from, and related by, at least one of a family of code generation seeds.

* * * * *

UNITED STATES PATENT AND TRADEMARK OFFICE

CERTIFICATE OF CORRECTION

PATENT NO. : 5,799,010 Page 1 of 4

DATED : August 25, 1998

INVENTOR(S) : Lomp et al.

It is certified that error appears in the above-identified patent and that said Letters Patent is hereby corrected as shown below: On the title page:

On page 2, under other publications, please insert --Raymond W. Nettleton, "Spectral Efficiency in Cellular Land-Mobile Communications: A Spread-Spectrum Approach", UMI Dissertation Information Service (1978) 204 pp.

Hossein Al Avi, "Power Control and Interference Management in a Spread-Spectrum Cellular Mobile Radio System," UMI Dissertation Information Services, (1984). 129 pp.--

At column 6, line 65, delete "AC" and insert therefor --APC--.

At column 7, line 7, delete "AC" and insert therefor --APC--.

At column 9, line 26, delete "AID" and insert therefor --A/D--.

At column 10, line 38, delete "SHC" and insert therefor --SLIC--.

At column 11, line 18, after "these" delete "to".

UNITED STATES PATENT AND TRADEMARK OFFICE

CERTIFICATE OF CORRECTION

PATENT NO. : 5,799,010
DATED : August 25, 1998 Page 2 of 4
INVENTOR(S) : Lomp et al.

It is certified that error appears in the above-identified patent and that said Letters Patent is hereby corrected as shown below:

At column 12, line 15 delete "AC" and insert therefor --APC--.

At column 12, line 17 delete "AC" and insert therefor --APC--.

At column 12, line 22 delete "AC" and insert therefor --APC--.

At column 15, line 6 delete "AC" and insert therefor --APC--.

At column 15, line 25 delete "AC" and insert therefor --APC--.

At column 16, line 18 delete "AC" each (each occurrence) and insert therefor --APC--.

At column 16, line 21 delete "AC" and insert therefor --APC--.

At column 47, line 31 delete "tip" and insert therefor --up--.

UNITED STATES PATENT AND TRADEMARK OFFICE

CERTIFICATE OF CORRECTION

PATENT NO. : 5,799,010

DATED : August 25, 1998 Page 3 of 4

INVENTOR(S) : Lomp et al.

It is certified that error appears in the above-identified patent and that said Letters Patent is hereby corrected as shown below:

At column 61, line 40 delete "AC" and insert therefor --APC--.

At column 50, line 37 delete "$C_{m\&k}^{*}$" and insert therefor --$C^{*}_{m\&k}$--.

At column 77 and 78, within subcolumn 10, delete the series of numbers starting with the second instance of "6692" and ending with the "6743" and insert therefor a series of numbers starting with 6694 and ending with 6755 in increments of one.

increments of one.

UNITED STATES PATENT AND TRADEMARK OFFICE

CERTIFICATE OF CORRECTION

PATENT NO. : 5,799,010
DATED : August 25, 1998
INVENTOR(S) : Lomp et al.

It is certified that error appears in the above-identified patent and that said Letters Patent is hereby corrected as shown below:

At column 80, within subcolumn 10 delete the series of numbers starting with the second instance of "7133" and ending with "7143" and insert therefor a series of numbers starting with 7135 and ending with 7145 in increments of one.

Signed and Sealed this

Twenty-second Day of February, 2000

Attest:

Q. TODD DICKINSON

Attesting Officer

Commissioner of Patents and Trademarks

EXHIBIT C

US006075792A

United States Patent [19]

Ozluturk

[11] Patent Number: 6,075,792

[45] Date of Patent: Jun. 13, 2000

[54] **CDMA COMMUNICATION SYSTEM WHICH SELECTIVELY ALLOCATES BANDWIDTH UPON DEMAND**

[75] Inventor: **Fatih M. Ozluturk**, Port Washington, N.Y.

[73] Assignee: **InterDigital Technology Corporation**, Wilmington, Del.

[21] Appl. No.: **08/898,537**

[22] Filed: **Jul. 22, 1997**

Related U.S. Application Data

[60] Provisional application No. 60/049,637, Jun. 16, 1997.

[51] **Int. Cl.**[7] **H04B 7/216**

[52] **U.S. Cl.** **370/441**; 370/335; 370/342; 370/524

[58] **Field of Search** 370/252, 253, 370/328, 329, 335, 342, 441, 479; 375/200; 455/422, 455, 522, 524

[56] **References Cited**

U.S. PATENT DOCUMENTS

5,442,625	8/1995	Gitlin et al. .	
5,596,570	1/1997	Soliman	370/252
5,621,723	4/1997	Walton, Jr. et al.	370/335
5,642,348	6/1997	Barzegar et al.	370/277
5,671,218	9/1997	I et al.	370/252

FOREIGN PATENT DOCUMENTS

9526094	9/1995	WIPO	H04M 11/00
9709810	3/1997	WIPO	H04L 23/00

Primary Examiner—Ajit Patel
Assistant Examiner—Bob A. Phunkulh
Attorney, Agent, or Firm—Volpe and Koening, P.C.

[57] **ABSTRACT**

A CDMA wireless digital communication system which supports all types of voice and data communications while utilizing the minimum amount of bandwidth for the particular application. The system efficiently allocates ISDN bandwidth on demand by a subscriber. Upon initialization of the subscriber unit, the system establishes a channel and generates the necessary spreading codes to support the highest capacity channel desired by the subscriber unit. Portions of the communication spectrum bandwidth are not reserved until actually required by the subscriber unit. Since the call setup is performed at the beginning of a call from that subscriber unit, including the assignment of spreading codes, a subscriber unit can quickly gain access to the portion of the spectrum that is required to support the particular application.

18 Claims, 12 Drawing Sheets

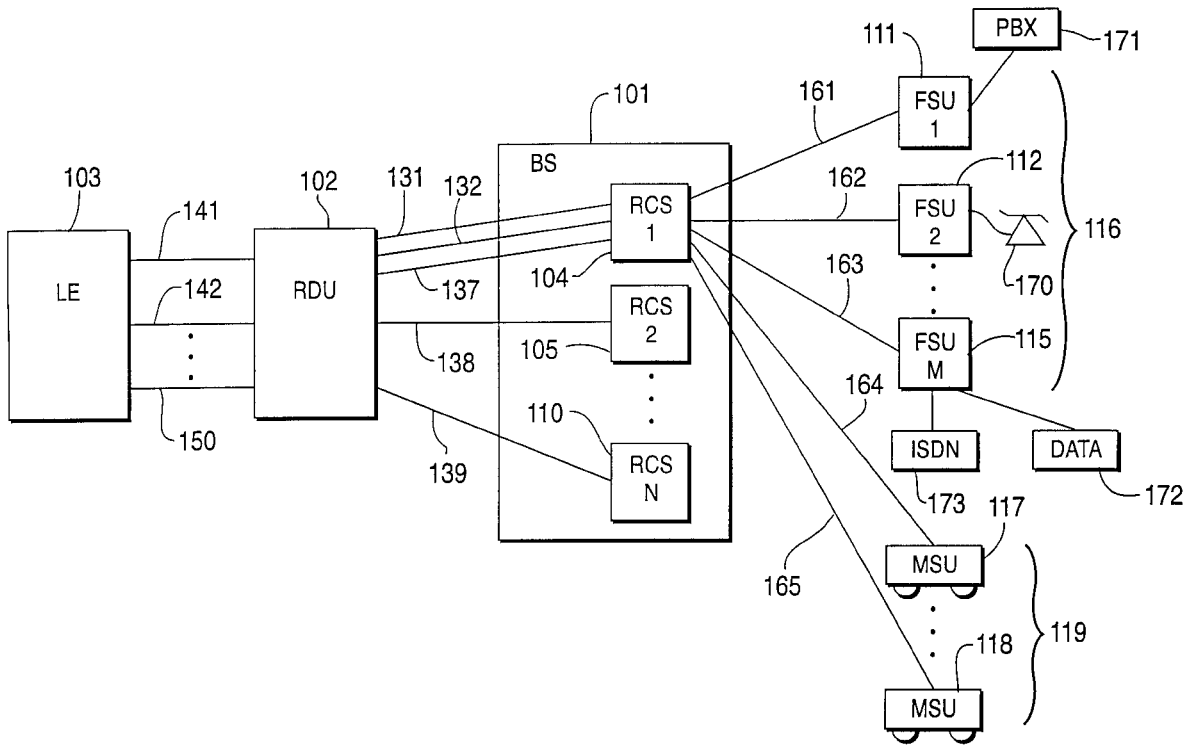

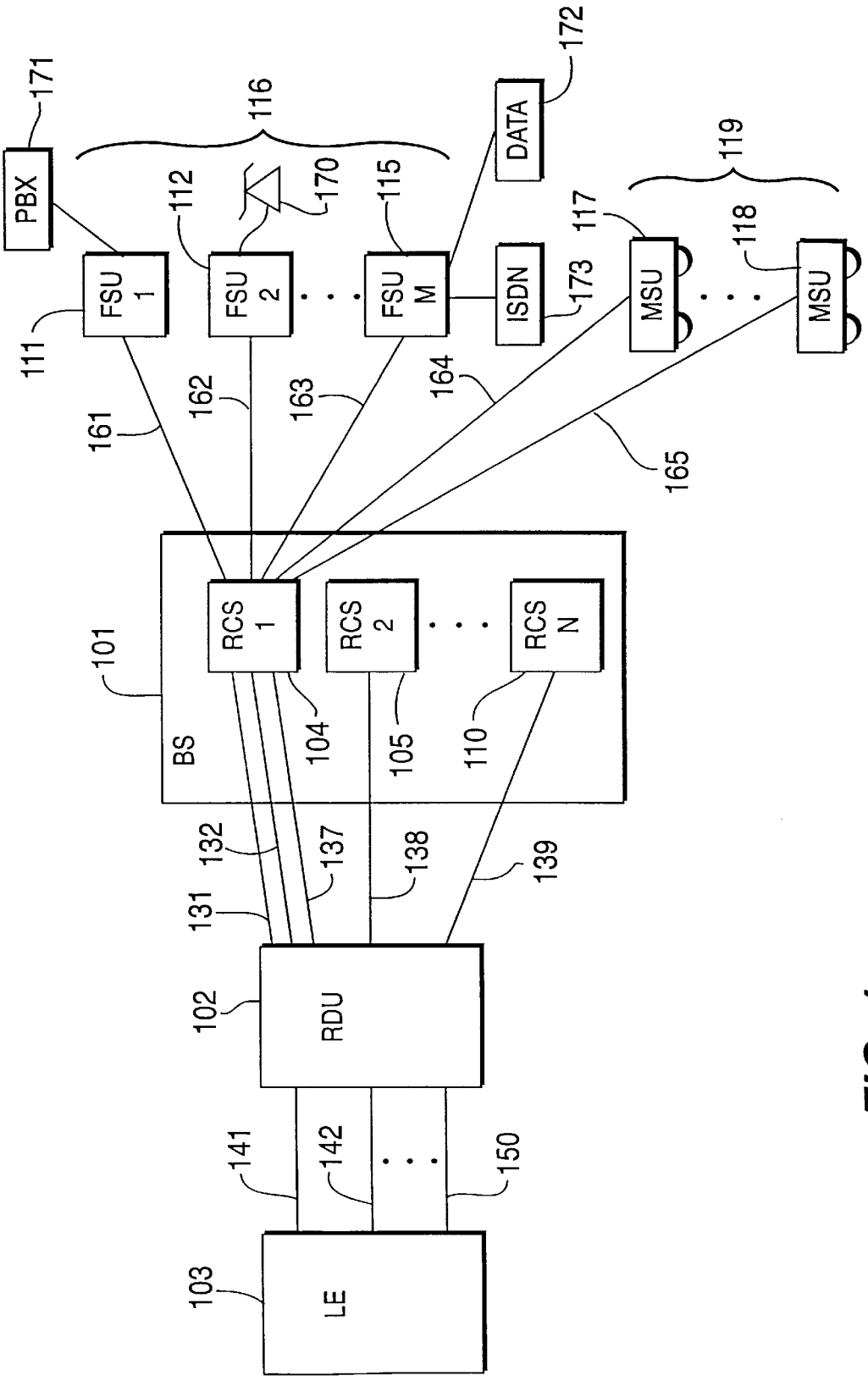
PBX
171
116
112
170
115
DATA
172
119
117
118
FSU 1
FSU 2
FSU M
ISDN
173
MSU
MSU
111
161
162
163
164
165
RCS 1
RCS 2
RCS N
101
BS
104
105
110
132
137
138
139
131
RDU
102
141
142
150
LE
103

FIG. 1

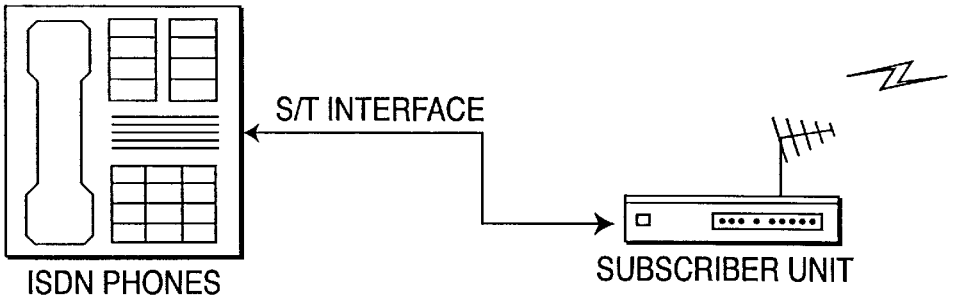

ISDN TERMINAL INTERFACE

FIG. 2A

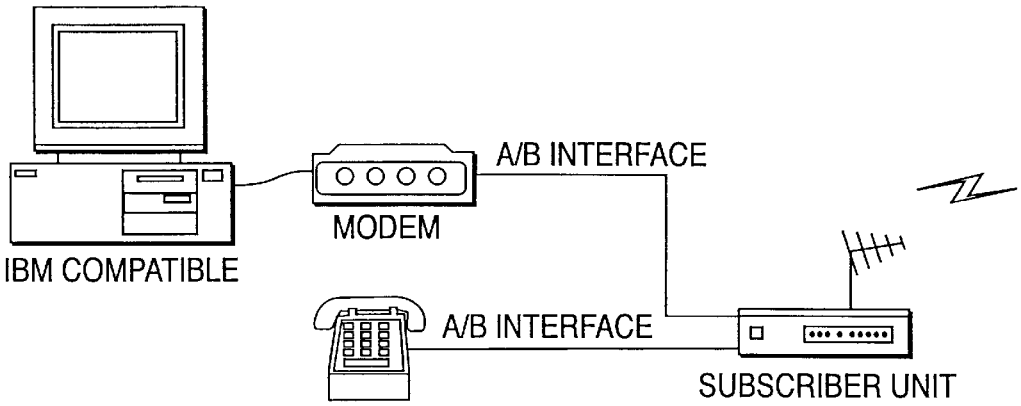

POTS TERMINAL INTERFACE

FIG. 2B

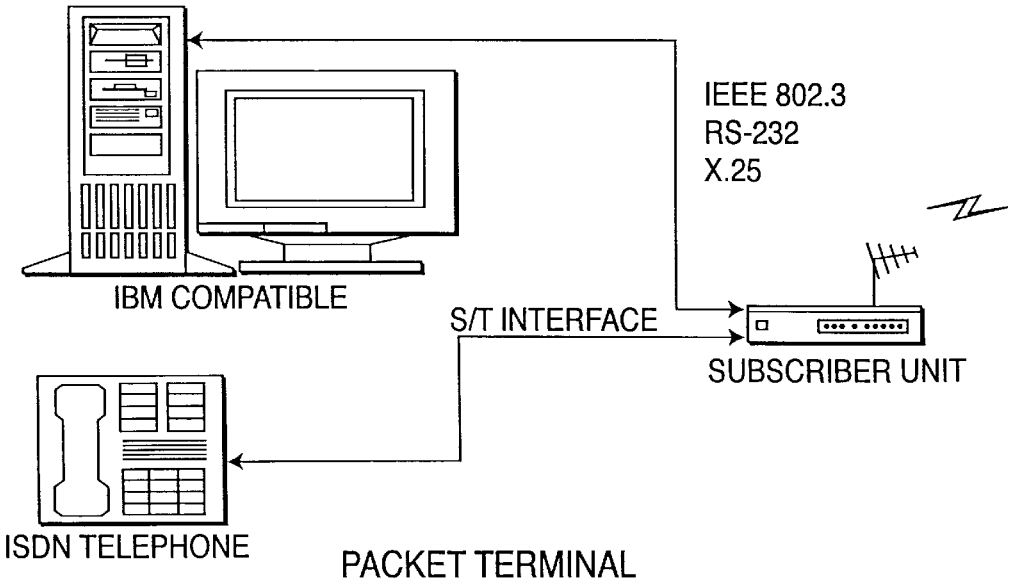

PACKET TERMINAL

FIG. 2C

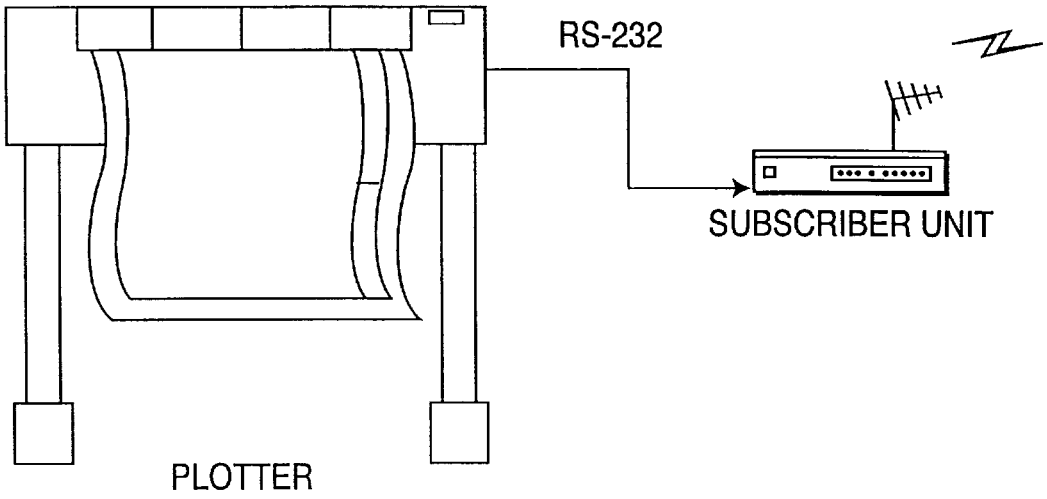

WIDEBAND CONNECTION

FIG. 2D

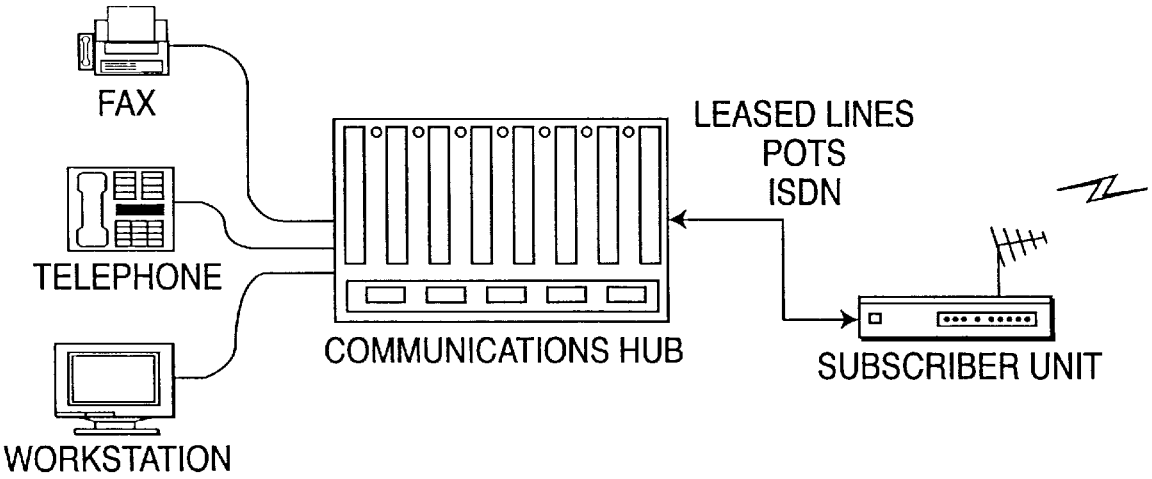

LEASED LINE TERMINAL INTERFACES

FIG. 2E

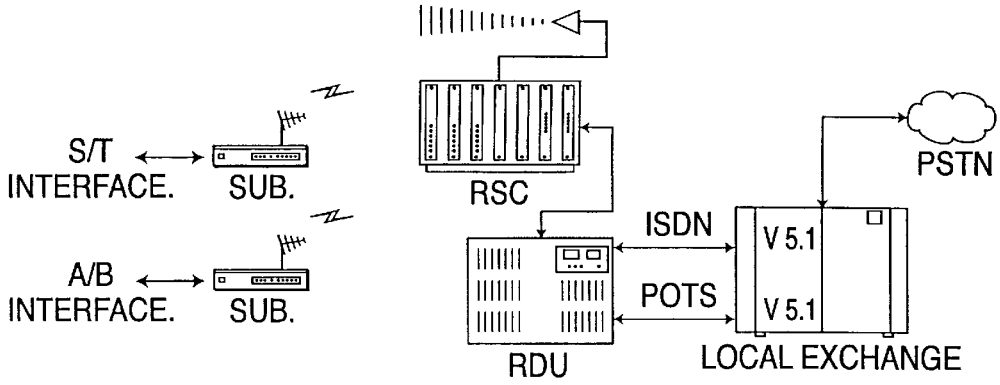

ISDN AND POTS NETWORK INTERFACE

FIG. 2F

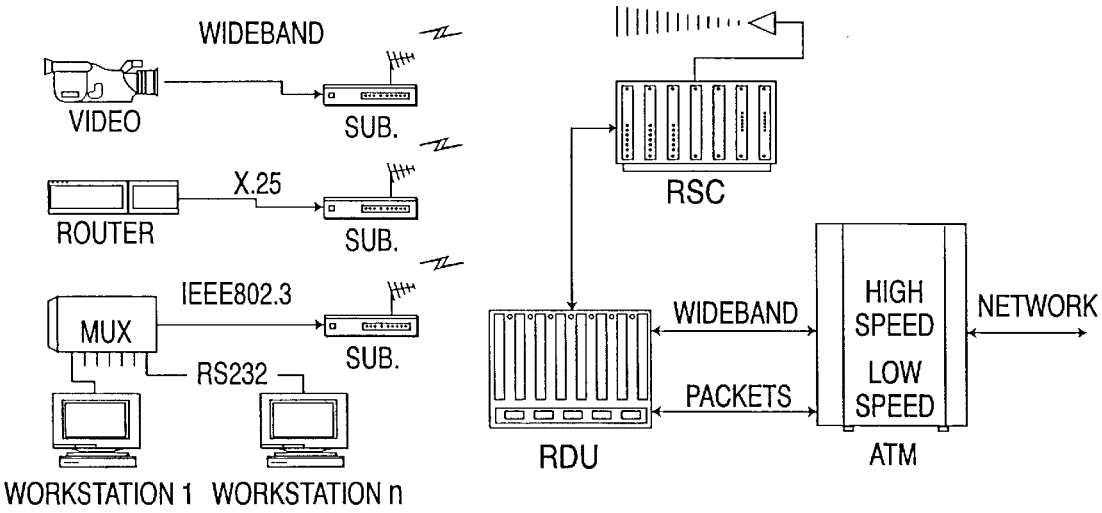

WIDEBAND AND PACKET NETWORK INTERFACE

FIG. 2G

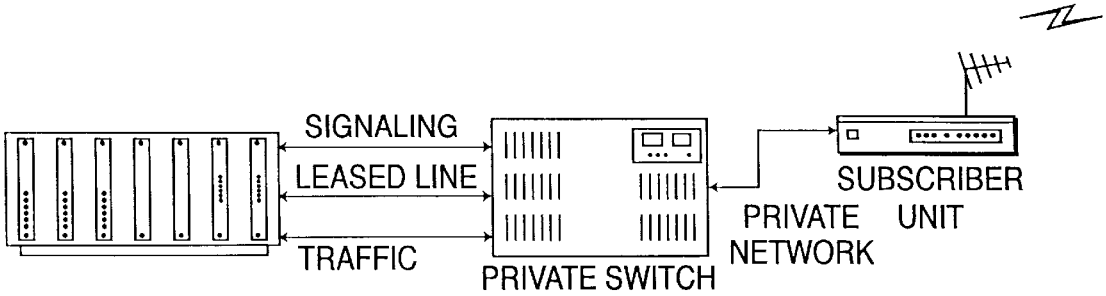

LEASED LINE NETWORK INTERFACE

FIG. 2H

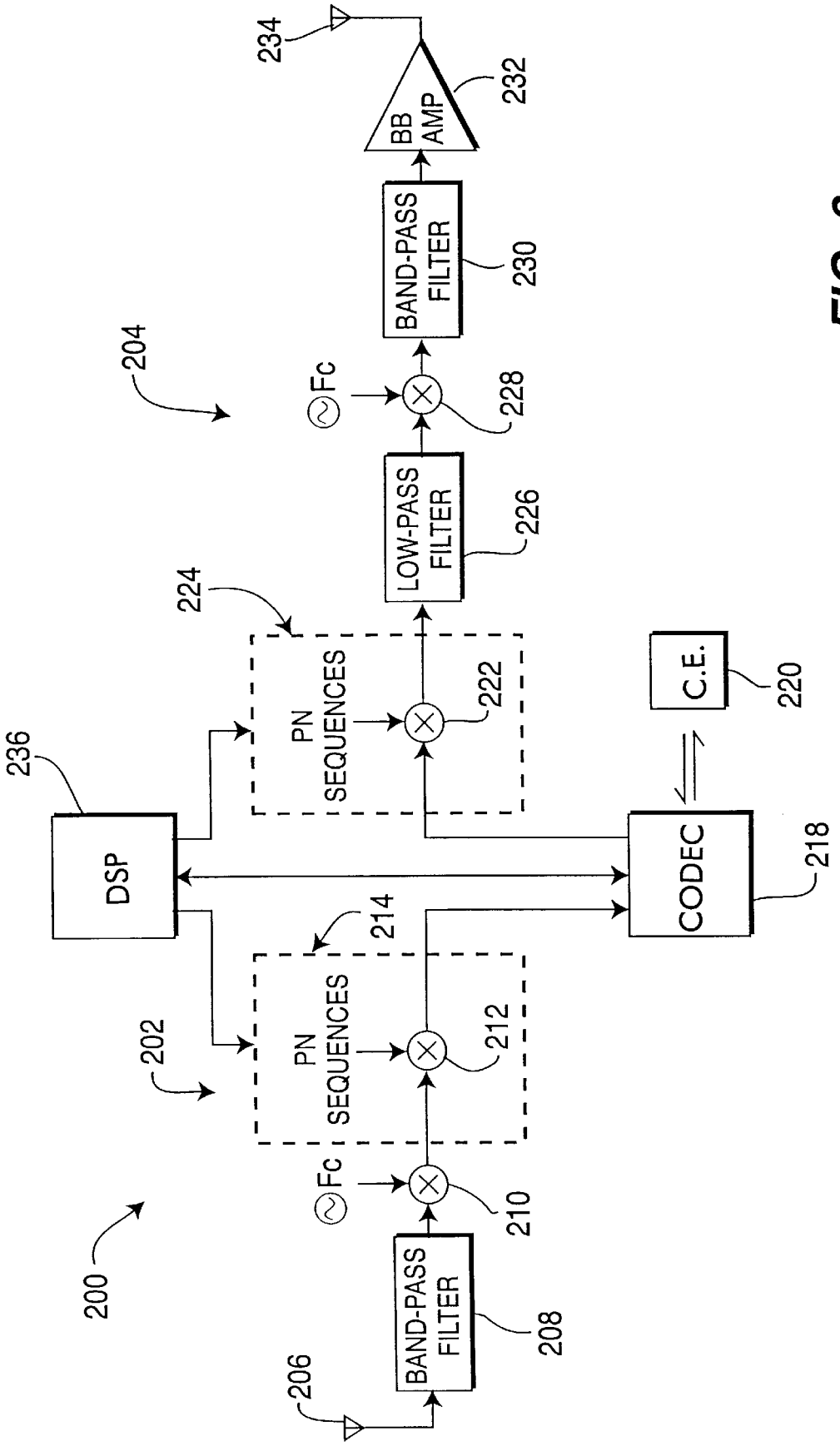
234
BB AMP
232
BAND-PASS FILTER
230
204
Fc
228
LOW-PASS FILTER
226
224
PN SEQUENCES
222
C.E.
220
236
DSP
CODEC
218
214
PN SEQUENCES
212
202
Fc
210
200
BAND-PASS FILTER
208
206

FIG. 3

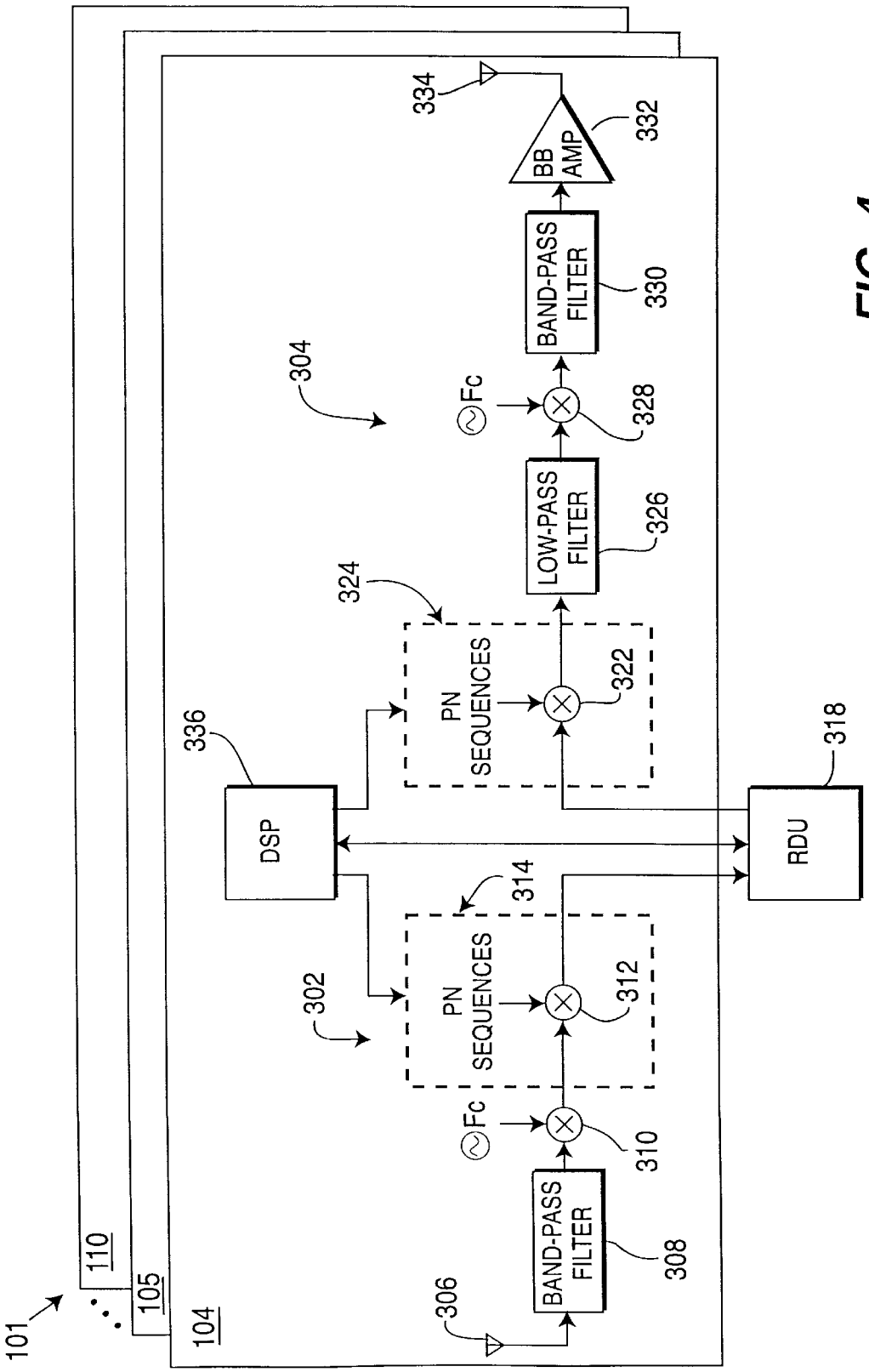
101
110
105
104
306
BAND-PASS FILTER
308
Fc
310
PN SEQUENCES
312
314
302
DSP
336
RDU
318
PN SEQUENCES
322
324
LOW-PASS FILTER
326
Fc
328
304
BAND-PASS FILTER
330
BB AMP
332
334

FIG. 4

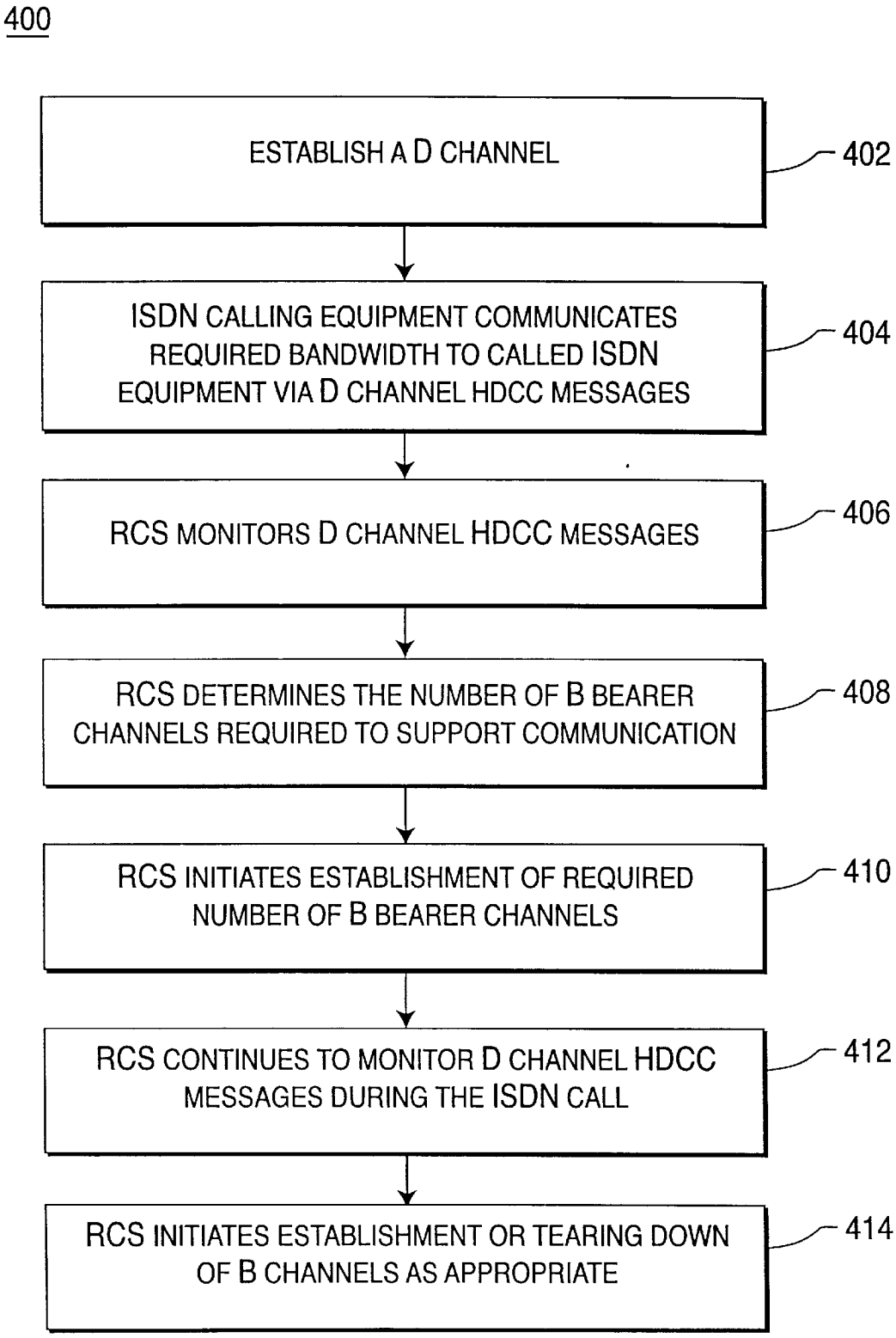
400
ESTABLISH A D CHANNEL
402
ISDN CALLING EQUIPMENT COMMUNICATES REQUIRED BANDWIDTH TO CALLED ISDN EQUIPMENT VIA D CHANNEL HDCC MESSAGES
404
RCS MONITORS D CHANNEL HDCC MESSAGES
406
RCS DETERMINES THE NUMBER OF B BEARER CHANNELS REQUIRED TO SUPPORT COMMUNICATION
408
RCS INITIATES ESTABLISHMENT OF REQUIRED NUMBER OF B BEARER CHANNELS
410
RCS CONTINUES TO MONITOR D CHANNEL HDCC MESSAGES DURING THE ISDN CALL
412
RCS INITIATES ESTABLISHMENT OR TEARING DOWN OF B CHANNELS AS APPROPRIATE
414

FIG. 5

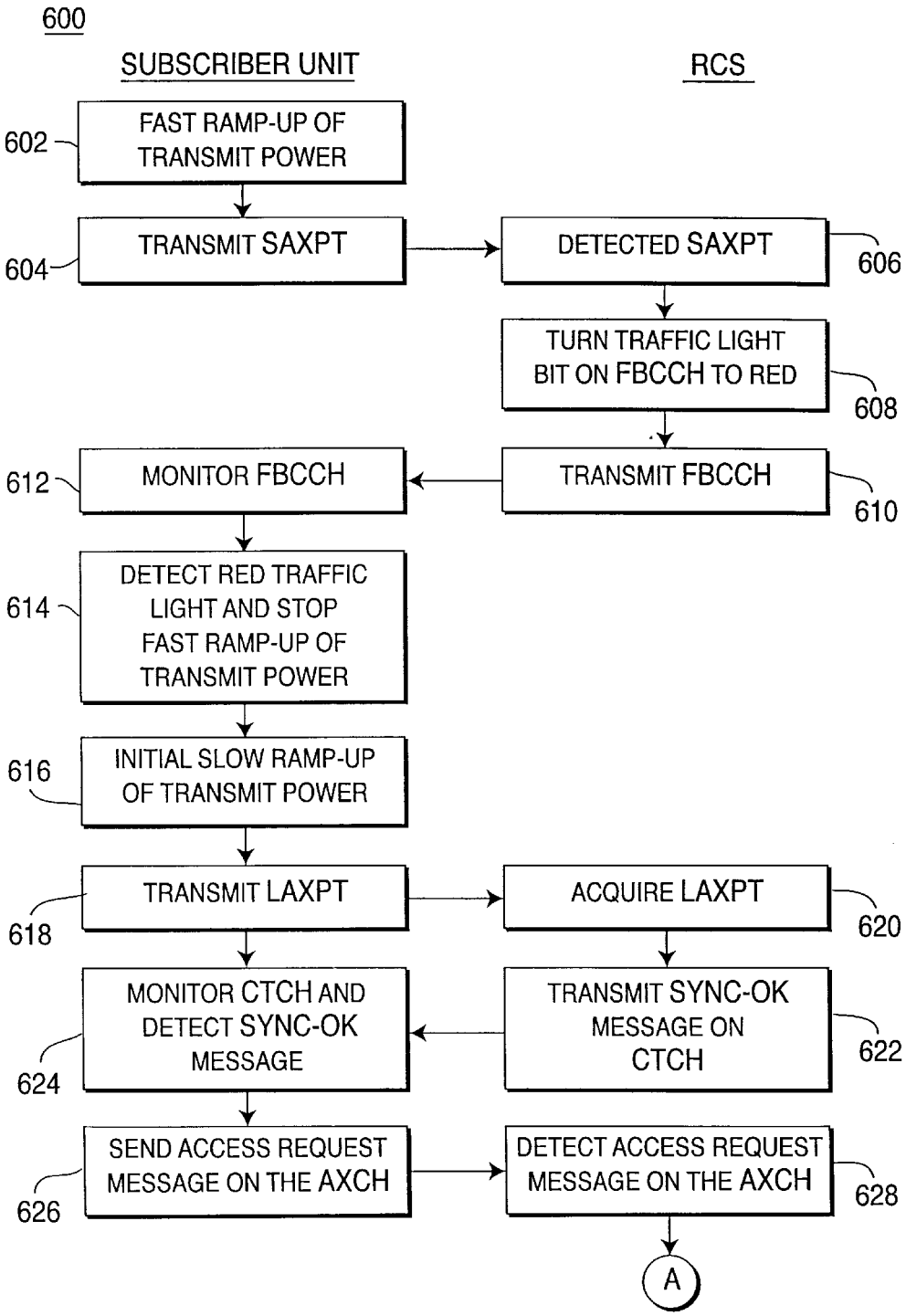
600
SUBSCRIBER UNIT
RCS
602
FAST RAMP-UP OF TRANSMIT POWER
604
TRANSMIT SAXPT
DETECTED SAXPT
606
TURN TRAFFIC LIGHT BIT ON FBCCH TO RED
608
612
MONITOR FBCCH
TRANSMIT FBCCH
610
614
DETECT RED TRAFFIC LIGHT AND STOP FAST RAMP-UP OF TRANSMIT POWER
616
INITIAL SLOW RAMP-UP OF TRANSMIT POWER
618
TRANSMIT LAXPT
ACQUIRE LAXPT
620
624
MONITOR CTCH AND DETECT SYNC-OK MESSAGE
TRANSMIT SYNC-OK MESSAGE ON CTCH
622
626
SEND ACCESS REQUEST MESSAGE ON THE AXCH
DETECT ACCESS REQUEST MESSAGE ON THE AXCH
628
A

FIG. 6A

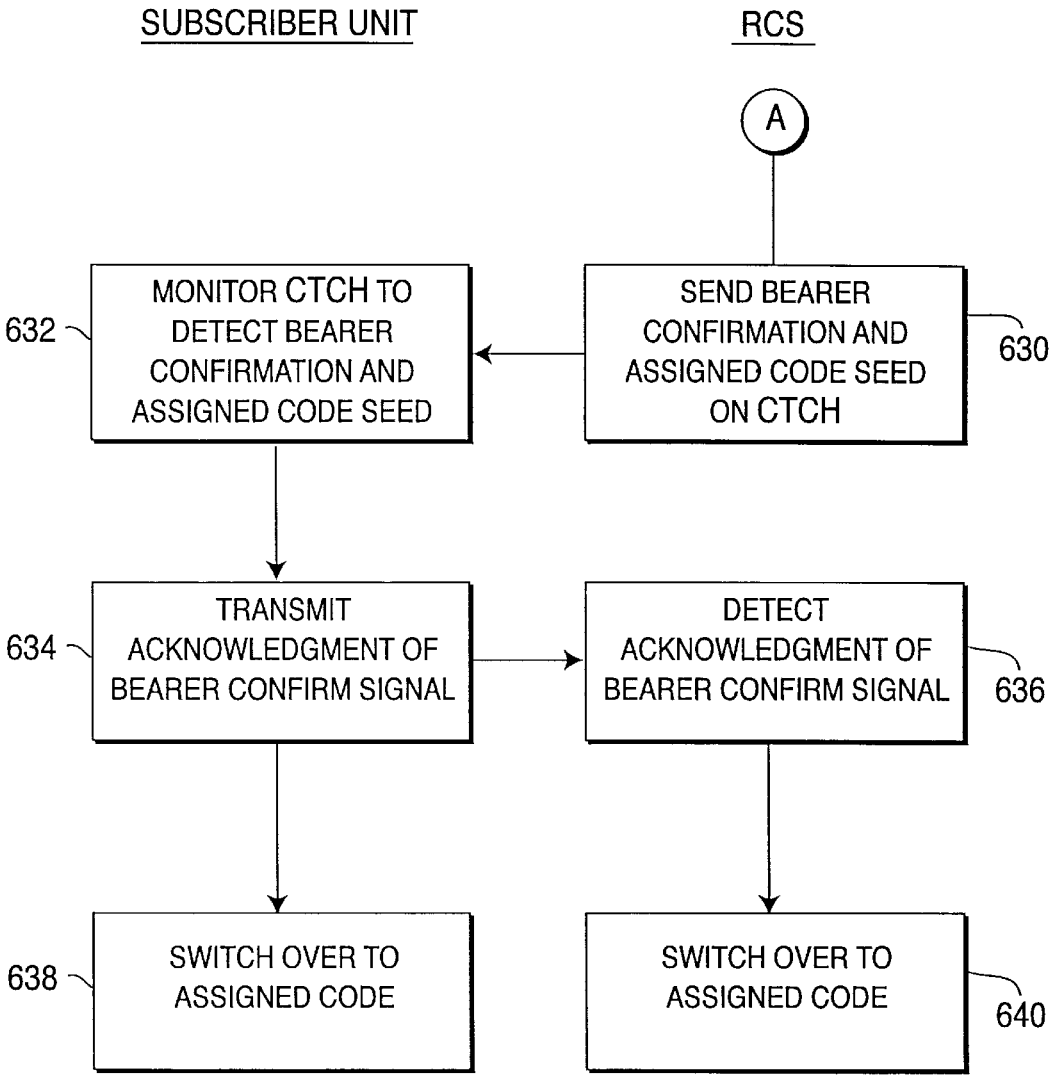
SUBSCRIBER UNIT
RCS
A
MONITOR CTCH TO DETECT BEARER CONFIRMATION AND ASSIGNED CODE SEED
632
SEND BEARER CONFIRMATION AND ASSIGNED CODE SEED ON CTCH
630
TRANSMIT ACKNOWLEDGMENT OF BEARER CONFIRM SIGNAL
634
DETECT ACKNOWLEDGMENT OF BEARER CONFIRM SIGNAL
636
SWITCH OVER TO ASSIGNED CODE
638
SWITCH OVER TO ASSIGNED CODE
640

FIG. 6B

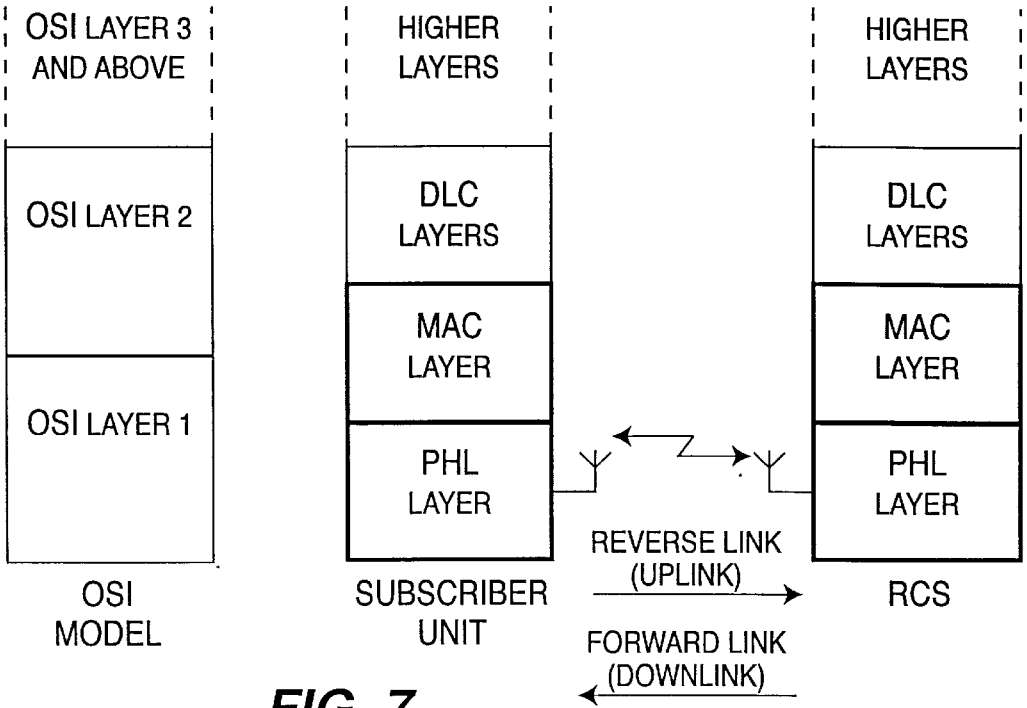

FIG. 7

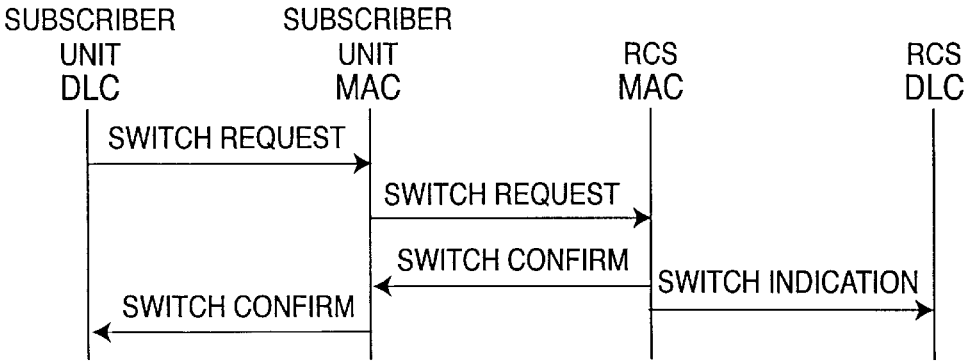

FIG. 8A

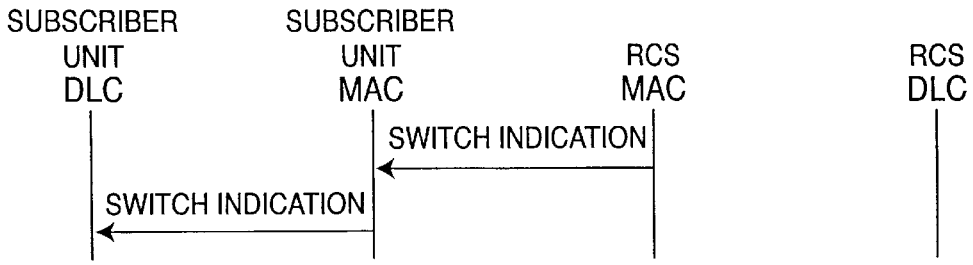

FIG. 8B

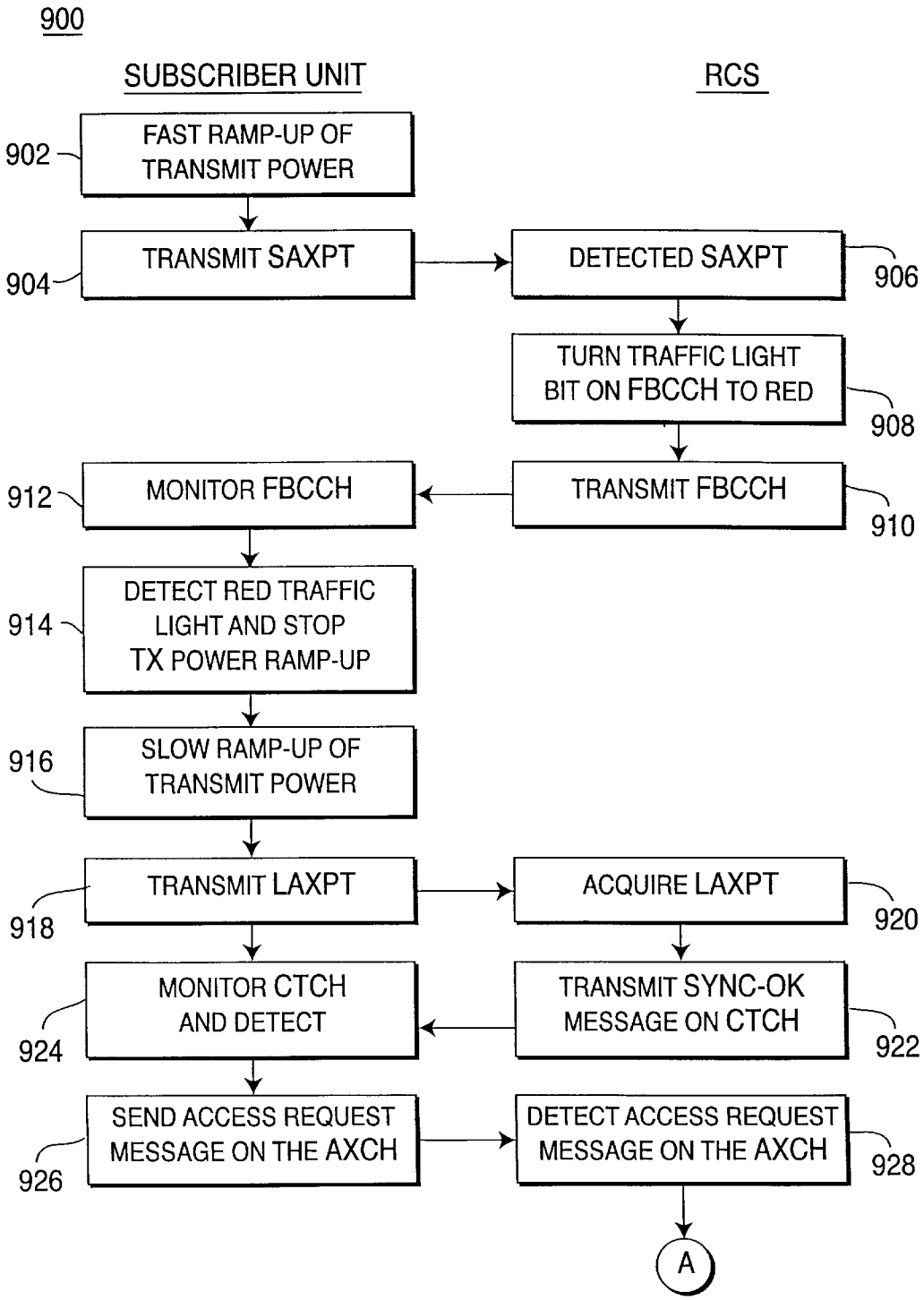
900
SUBSCRIBER UNIT
RCS
902
FAST RAMP-UP OF TRANSMIT POWER
904
TRANSMIT SAXPT
DETECTED SAXPT
906
TURN TRAFFIC LIGHT BIT ON FBCCH TO RED
908
TRANSMIT FBCCH
910
912
MONITOR FBCCH
914
DETECT RED TRAFFIC LIGHT AND STOP TX POWER RAMP-UP
916
SLOW RAMP-UP OF TRANSMIT POWER
918
TRANSMIT LAXPT
ACQUIRE LAXPT
920
924
MONITOR CTCH AND DETECT
TRANSMIT SYNC-OK MESSAGE ON CTCH
922
926
SEND ACCESS REQUEST MESSAGE ON THE AXCH
DETECT ACCESS REQUEST MESSAGE ON THE AXCH
928
A

FIG. 9A

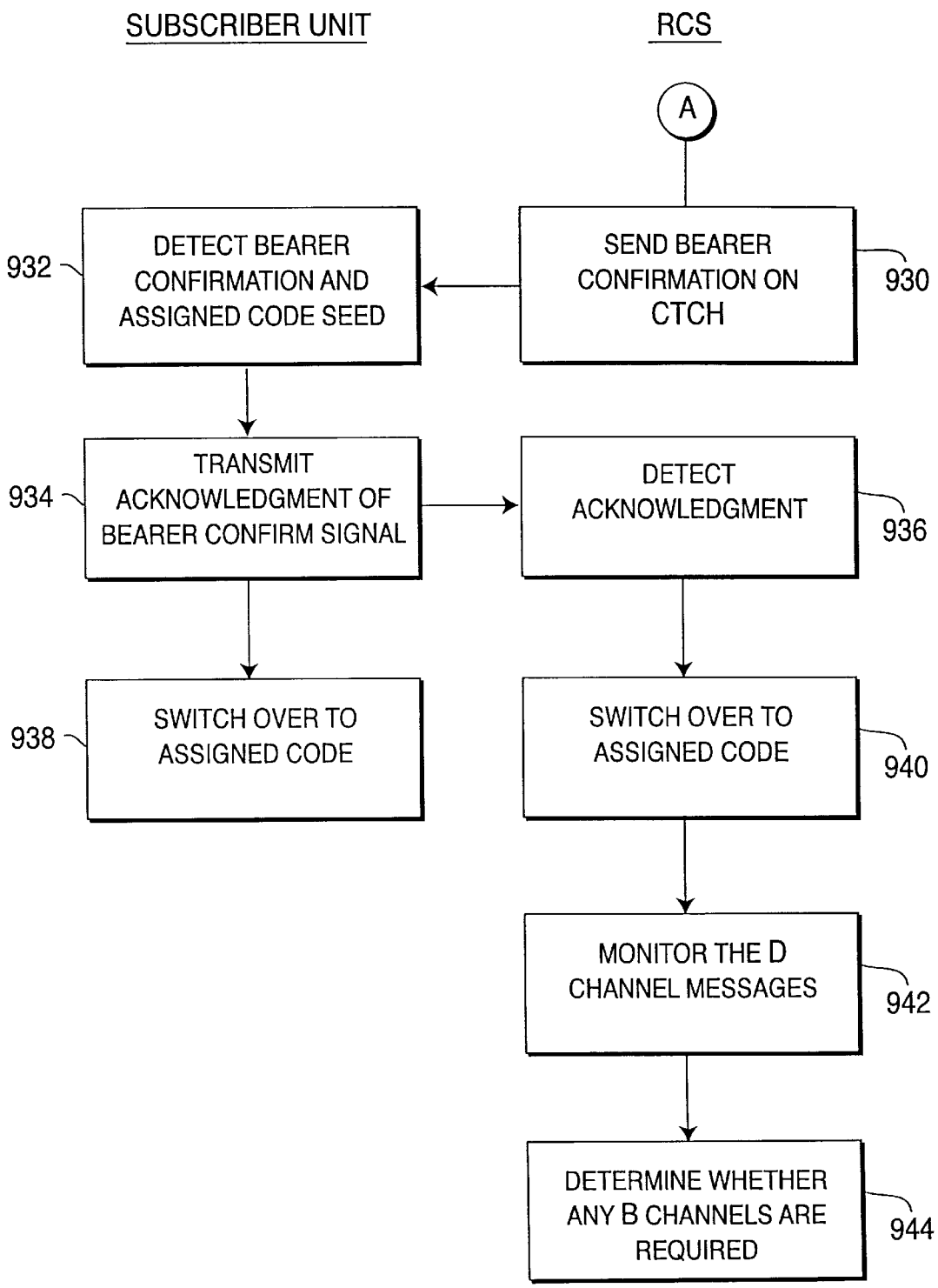
SUBSCRIBER UNIT
RCS
A
SEND BEARER CONFIRMATION ON CTCH
930
DETECT BEARER CONFIRMATION AND ASSIGNED CODE SEED
932
TRANSMIT ACKNOWLEDGMENT OF BEARER CONFIRM SIGNAL
934
DETECT ACKNOWLEDGMENT
936
SWITCH OVER TO ASSIGNED CODE
938
SWITCH OVER TO ASSIGNED CODE
940
MONITOR THE D CHANNEL MESSAGES
942
DETERMINE WHETHER ANY B CHANNELS ARE REQUIRED
944

FIG. 9B

CDMA COMMUNICATION SYSTEM WHICH SELECTIVELY ALLOCATES BANDWIDTH UPON DEMAND

CROSS REFERENCE TO RELATED APPLICATION

This application is a continuation-in-part of Provisional Application No. 60/049,637, filed Jun. 16, 1997.

BACKGROUND OF THE INVENTION

1. Field of the Invention

This invention generally relates to wireless communication systems. More particularly, the invention relates to a wireless digital Code Division Multiple Access (CDMA) communication system including a base station and a plurality of subscriber units which selectively allocates bandwidth upon demand by a subscriber unit or an entity desiring to establish a communication with a subscriber unit.

2. Description of the Related Art

The use of wireless technology by the telecommunication industry has increased dramatically as the capacity and reliability of wireless communication systems has improved. Once considered only to be a convenient method for sending voiced communications, digital wireless communications systems are now a necessity for providing transmission of all forms of communications including plain old telephony service (POTS), integrated services digital network (ISDN), variable bit rate (VBR) data service, wideband service, leased line service and packet data services. Although it has been technically feasible to transmit all of these types of services, the large amount of bandwidth required for high data rate communications has made many of these services uneconomical. As the number of subscribers requiring access to wireless digital communication systems has increased, the reliance on a wide bandwidth for each communication is no longer realistic.

The finite bandwidth allocated to wireless communications systems for public use has become increasingly valuable. Since it is unlikely that additional bandwidth to support user growth will be allocated for existing applications, many of the recent advances in telecommunication hardware and software have been directed toward increasing the transmission rate of data while utilizing a decreased amount of bandwidth.

Accordingly, there exists a need for a wireless digital communication system which supports the same high data rate services as conventional wired networks while utilizing the allocated bandwidth more efficiently.

SUMMARY OF THE INVENTION

The present invention is a CDMA wireless digital communication system which supports all types of voice and data communications while utilizing the minimum amount of bandwidth for the particular application. The system efficiently allocates ISDN bandwidth on demand by a subscriber. Upon initialization of the subscriber unit, the system establishes a channel and generates the necessary spreading codes to support the highest capacity channel desired by the subscriber unit. However, the system does not set aside portions of the communication bandwidth until actually required by the subscriber unit. Since the call setup is performed at the beginning of any call from that particular subscriber unit, including the assignment of spreading codes, a subscriber unit can quickly gain access to the portion of the spectrum that is required to support the particular application.

Accordingly, it is an object of the invention to provide a wireless digital spread spectrum communication system which supports a range of telephone services including POTS and ISDN while efficiently utilizing the spread spectrum bandwidth.

Other objects and advantages of the present invention will become apparent after reading the description of a presently preferred embodiment.

BRIEF DESCRIPTION OF THE DRAWINGS

FIG. **1** is a block diagram of a code division multiple access spread spectrum communication system according to the present invention;

FIG. **2**A is a block diagram of the interface between the subscriber unit of the present invention and an ISDN terminal;

FIG. **2**B is a block diagram of the interface between the subscriber unit of the present invention and a POTS terminal;

FIG. **2**C is a block diagram of the interface between the subscriber unit of the present invention and a packet terminal;

FIG. **2**D is a block diagram of the interface between the subscriber unit of the present invention and a wideband connection;

FIG. **2**E is a block diagram of the interface between the subscriber unit of the present invention and a leased line terminal;

FIG. **2**F is a block diagram of the interface between the subscriber unit of the present invention and an ISDN and POTS network;

FIG. **2**G is a block diagram of the interface between the subscriber unit of the present invention and a wideband and packet network;

FIG. **2**H is a block diagram of the interface between the subscriber unit of the present invention and a leased line network;

FIG. **3** is a block diagram of a subscriber unit in accordance with the present invention;

FIG. **4** is a block diagram of an RCS in accordance with the present invention;

FIG. **5** is a flow diagram of the procedure for dynamic allocation of bandwidth for ISDN service;

FIGS. **6**A and **6**B are flow diagrams of the establishment of the bearer channel between the subscriber unit and the RCS for POTS service;

FIG. **7** shows the layered protocol of the communications between the subscriber unit and RCS;

FIG. **8**A illustrates the simplified bearer switching method as initiated by the subscriber unit;

FIG. **8**B illustrates the simplified bearer switching method as initiated by the RCS; and

FIGS. **9**A and **9**B are flow diagrams of the establishment of the bearer channel between the subscriber unit and the RCS for ISDN service.

DETAILED DESCRIPTION OF THE PREFERRED EMBODIMENT

The preferred embodiment will be described with reference to the drawing figures wherein like numerals represent like elements throughout.

The system of the present invention provides local-loop telephone service using radio links between one or more

base stations and at least one remote subscriber unit. In the exemplary embodiment, the radio link is described for a base station communicating with a fixed subscriber unit (FSU), but the system is equally applicable to systems including multiple base stations with radio links to both fixed subscriber units and mobile subscriber units (MSUs). Consequently, the fixed and mobile subscriber units will be referred to herein as subscriber units.

Referring to FIG. **1**, a base station **101** provides call connection to a local exchange **103** or any other telephone network switching interface, such as a private branch exchange (PBX), and includes at least one radio carrier station (RCS) **104**, **105** . . . **110**. One or more RCSs **104**, **105**, **110** connect to a radio distribution unit (RDU) **102** through links **131**, **132**, **137**, **138**, **139** and RDU **102** interfaces with the local exchange **103** by transmitting and receiving call set-up, control, and information signal through telco links **141**, **142**, **150**. The subscriber units **116**, **119** communicate with the RCS **104** through radio links **161**, **162**, **163**, **164**, **165**. Alternatively, another embodiment of the invention includes several subscriber units and a "master subscriber unit" with functionality similar to the RCS **104**. Such an embodiment may or may not have connection to a local telephone network.

The radio links **161** to **165** operate within the frequency bands of the CDS1800 standard (1.71–1.785 GHz and 1.805–1.880 GHZ); the US-PCS standard (1.85–1.99 GHz); and the CEPT standard (2.0–2.7 GHz). Although these bands are used in the described embodiment, the invention is equally applicable to any RF frequency band including the entire UHF and SHF bands, and bands from 2.7 GHZ to 5 GHz. The transmit and receive bandwidths are multiples of 3.5 MHz starting at 7 MHz, and multiples of 5 MHz starting at 10 MHz, respectively. The described system includes bandwidths of 7, 10, 10.5, 14 and 15 MHz. In the exemplary embodiment of the invention, the minimum guard band between the uplink and downlink is 20 MHz, and is desirably at least three times the signal bandwidth. The duplex separation is between 50 to 175 MHz, with the described invention using 50, 75, 80, 95 and 175 MHz. Other frequencies may also be used.

Although the system may use different spread-spectrum bandwidths centered around a carrier for the transmit and receive spread-spectrum channels, the present invention is readily extended to systems using multiple spread-spectrum bandwidths for the transmit channels and multiple spread-spectrum bandwidths for the receive channels. Alternatively, the same spread-spectrum bandwidth for both the transmit and receive channels may be employed wherein uplink and downlink transmissions will occupy the same frequency band. The present invention may also be readily extended to multiple CDMA frequency bands, each conveying a respectively different set of messages, uplink, downlink or uplink and downlink.

The spread binary symbol information is transmitted over the radio links **161** to **165** using quadrature phase shift keying (QPSK) modulation with Nyquist pulse shaping. However, other modulation techniques may be used including, but not limited to, offset QPSK minimum shift keying (MSK), Gaussian phase shift keying (GPSK) and M-ary phase shift keying (MPSK).

The radio links **161** to **165** incorporate broadband code division multiple access (B-CDMA™) technology as the mode of transmission in both the uplink and downlink directions. CDMA (also known as spread spectrum) communication techniques used in multiple access systems are well-known, and are described in U.S. Pat. No. 5,228,056 entitled SYNCHRONOUS SPREAD-SPECTRUM COMMUNICATION SYSTEM AND METHOD by Donald Schilling. The system described utilizes the direct sequence spreading technique. The CDMA modulator generates the spread-spectrum spreading code sequence, which can be a pseudonoise sequence, and performs complex direct sequence modulation of the QPSK signals with spreading code sequences for the In-phase (I) and Quadrature (Q) channels. Pilot signals, spreading codes which are not modulated by data, are generated and transmitted with the modulated signals. The pilot signals are used for synchronization, carrier phase recovery, and for estimating the impulse response of the radio channel. Each subscriber unit **111–118** includes a code generator and at least one CDMA modulator and demodulator, which together comprise a CDMA modem. Each RCS **104**, **105**, **110** has at least one code generator plus sufficient CDMA modulators and demodulators for all of the logical channels in use by the subscriber units.

The CDMA demodulator despreads the signal with appropriate processing to reduce or exploit multipath propagation effects. The radio links support multiple traffic channels with data rates of 8, 16, 32, 64, 128 and 144 kb/s. The physical channel to which a traffic channel is connected operates with a 64 k symbol/sec rate. Other data rates may be supported, and forward error correction (FEC) coding can be employed. For the described embodiment, FEC with a coding rate of ½ and a constraint length 7 is used. Other rates and constraint lengths can be used consistent with the code generation techniques employed.

Referring again to FIG. **1**, the RCS **104** interfaces to the RDU **102** through a plurality of RF links or terrestrial links **131**, **132**, **137** with, for example, 1.533 Mb/s DS1, 2.048 Mbs/E1; or HDSL formats to receive and send digital data signals. While these are typical telephone company standardized interfaces, the present invention is not limited to these digital data formats only. The exemplary RCS line interface (not shown in FIG. **1**) translates the line coding (such as HDB3, B8ZS, AMI) and extracts or produces framing information, performs alarms and facility signaling functions, as well as channel specific loop-back and parity check functions. This provides 64 kb/s PCM encoded or 32 kb/s ADPCM encoded telephone traffic channels or ISDN channels to the RCS **104**, **105**, **110** for processing as will be described in greater detail hereinafter. Other voice compression techniques can be used consistent with the sequence generation techniques.

The system of the present invention also supports bearer rate modification between the RCS **104** and the subscriber unit **111** for both POTS service and ISDN service. The subscriber units **111–118** may interface with a telephone unit **170**, a local switch (PBX) **171**, a data terminal **172**, an ISDN interface **173** or other types of equipment shown in FIGS. **2A–2H**. The input from the telephone unit **170** may include voice, voiceband data and signaling. Although the present invention is applicable to the communications between a plurality of subscriber units **111–118** and a plurality of RCSs **104–110**, reference hereinafter will be made to a particular subscriber unit and RCS for simplicity. If the signals input into the subscriber unit are not digital, the subscriber unit **111** translates the analog signals into digital sequences for transmission to the RCS **104**. The subscriber unit **112** encodes voice data with techniques such as ADPCM at rates of 32 kb/s or lower. The RCS **104** detects voiceband data or facsimile data with rates above 4.8 kb/s to modify the bearer rate of the traffic channel for unencoded transmission. Also

A-law, u-law, or no companding of the signal may be performed before transmission. As is well known to those of skill in the art, data compression techniques for digital data such as idle flag removal may also be used to conserve capacity and minimize interference.

The transmit power level of the radio interface between the RCS **104** and the subscriber unit **111** is controlled using a different closed loop power control method for the downlink and uplink directions. The automatic forward power control (AFPC) method determines the downlink transmit power level and the automatic reverse power control (ARPC) method determines the uplink transmit power level. The logical control channel by which the subscriber unit **111** and the RCS **104** transfer power control information operates at an update rate of at least a 16 kHz. Other embodiments may use a faster or slower update rate, for example 64 kHz. These algorithms ensure that the transmit power of a user maintains an acceptable bit-error rate (BER), maintain the system power at a minimum to conserve power and maintain the power level of the subscriber unit **111** as received by the RCS **104** at a nearly equal level.

The system also uses an optional maintenance power control method during the inactive mode of the subscriber unit **111**. When the subscriber unit **111** is inactive or powered-down to conserve power, the subscriber unit **111** occasionally activates to adjust its initial transmit power level setting in response to a maintenance power control signal from the RCS **104**. The maintenance power control signal is determined by the RCS **104** by measuring the received power level of the subscriber unit **111** and present system power level and calculating the necessary initial transmit power. The method shortens the channel acquisition time of the subscriber unit **111** to begin a communication and prevents the transmit power level of the subscriber unit **111** from becoming too high and interfering with other channels during the initial transmission before the closed loop power control reduces the transmit power.

The RCS **104** obtains synchronization of its clock from an interface line such as, but not limited to, E1, T1, or HDSL interfaces. The RCS **104** can also generate its own internal clock signal from an oscillator which may be regulated by a global positioning system (GPS) receiver. The RCS **104** generates a global pilot code, which can be acquired by the remote subscriber unit **111**. All transmission channels of the RCS **104** are synchronized to the global pilot channel. The spreading code phases of code generators (not shown in FIG. **1**) used for logical communication channels within the RCS **104** are also synchronized to the spreading code phase of the global pilot channel. Similarly, all subscriber units **111–118** which receive the global pilot code of the RCS **104** synchronize the spreading and de-spreading code phases of their code generators to the global pilot code.

Typically, a prior art channel is regarded as a communications path which is part of an interface and which can be distinguished from other paths of that interface without regard to its content. However, for CDMA communications, separate communications paths are distinguished by their content. All logical channels and subchannels of the present invention are mapped to a common 64 kilo-symbols per second (ksym/s) QPSK stream. Some channels are synchronized to associated pilot codes which are generated from, and perform a similar function to, the global pilot code. The system pilot signals are not considered logical channels.

Several logical communication channels are used over the RF communication link between the RCS **104** and the subscriber unit **111**. Each logical communication channel either has a fixed, pre-determined spreading code or a dynamically assigned spreading code. For both predetermined and assigned codes, the code phase is synchronized with the global pilot code.

The spreading codes are specified by the seeds used to generate the codes. A pool of "primary seeds" exists within the RDU **102**, a portion of which comprise global primary seeds and the remainder comprise assigned primary seeds. The RDU **102** allocates these primary seeds to the RCSs **104** on an as-needed basis. A global primary seed generates all of the global channel codes for use by an RCS **104** within a cell. However, assigned primary seeds are used to generate secondary assigned seeds. One primary assigned seed generates fifty-seven (57) secondary assigned seeds. Each secondary assigned seed is input into the code generators within the RCS **104** and the subscriber unit **111** to generate a set of assigned channel codes to support each communication link. In the preferred embodiment, each RCS **104** is given one global primary seed for generating global channel codes and two primary assigned seeds. Accordingly, the RCS **104** and its corresponding subscriber units **111–118** may generate up to 114 secondary assigned seeds. Each secondary assigned seed is assigned by the RCS **104** to generate the codes for an active link, thereby permitting enough codes for up to 114 simultaneous communication links.

Logical communication channels are divided into two groups: 1) global channels; and 2) assigned channels. The global channel group includes channels which are either transmitted from the RCS **104** to all subscriber units **111–118** or from any subscriber unit **111–118** to the RCS **104** regardless of the identity of the subscriber unit **111–118**. Channels in the assigned channels group are those channels dedicated to communication between the RCS **104** and a particular subscriber unit **111**.

With respect to the global channel group, the global channel group provides for: 1) broadcast control logical channels, which provide point-to-multi-point services for broadcasting messages to all subscriber units **111–118** and paging messages to subscriber units **111–118**; and 2) access control logical channels which provide point-to-point services on global channels for subscriber units **111–118** to access the system and obtain assigned channels. The RCS **104** of the present invention has one broadcast control logical channel and multiple access control logical channels. A subscriber unit **111–118** of the present invention has at least one broadcast control logical channel and at least one access control logical channel.

The global logical channels controlled by the RCS **104** are the fast broadcast channel (FBCCH) which broadcasts fast changing information concerning which services and which access channels are currently available, and the slow broadcast channel (SBCCH) which broadcasts slow changing system information and paging messages.

The subscriber unit **111** uses an access channel (AXCH) to begin communications with the RCS **104** and gain access to assigned channels. Each AXCH is paired with a control channel (CTCH) which is sent from the RCS **104** to the subscriber unit **111**. The CTCH is used by the RCS **104** to acknowledge and reply to access attempts by the subscriber unit **111**. The short access pilot (SAXPT) and the long access pilot (LAXPT) are transmitted synchronously with AXCH to initiate access and to provide the RCS **104** with a time and phase reference. The SAXPT is transmitted by the subscriber unit **111** while it ramps up its transmit power to initiate access to the RCS **104**. Since the SAXPT is a relatively short code it permits the RCS **104** to detect the

subscriber unit **111** quickly and avoids power overshoot by the subscriber unit **111**. Further detail regarding transmit power ramp-up using the SAXPT is described in more detail in an application entitled A METHOD OF CONTROLLING INITIAL POWER RAMP-UP IN CDMA SYSTEMS BY USING SHORT CODES, Ser. No. 08/670,162; filed Jun. 27, 1996 which is herein incorporated by reference as if fully set forth. Until the SAXPT is detected by the RCS **104**, subscriber unit **111** does not send any other signal. Once the SAXPT is detected, the subscriber unit **111** starts transmitting the LAXPT which provides the RCS **104** with a time and phase reference and permits the RCS **104** to determine the channel impulse response.

With respect to the assigned channel group, this group contains the logical channels that control a single communication link between the RCS **104** and the subscriber unit **111**. When an assigned channel group is formed, a pair of power control logical message channels for each of the uplink and downlink connections is established and one or more pairs of traffic channels, depending on the type of connection, is established. The bearer control function performs the required forward error control, bearer rate modification and encryption functions.

Each subscriber unit **111–118** has at least one assigned channel group when a communication link is established, and each RCS **104–110** has multiple assigned channel groups, one for each communication link in progress. An assigned channel group of logical channels is created for a communication link upon successful establishment of the communication link. The assigned channel group includes encryption, FEC coding, and multiplexing on transmission, and decryption, FEC decoding and demultiplexing on reception.

Each assigned channel group provides a set of communication link oriented point-to-point services and operates in both directions between a specific RCS **104** and a specific subscriber unit **111**. An assigned channel group formed for a communication link can control more than one bearer over the RF communication channel associated with a single communication link. Multiple bearers are used to carry distributed data such as, but not limited to, ISDN. An assigned channel group can provide for the duplication of traffic channels to facilitate switchover to 64 kb/s PCM for high speed facsimile and modem services for the bearer rate modification function.

The assigned logical channels formed upon a successful communication link and included in the assigned channel group are dedicated signaling channel order wire (OW), APC channel and one or more traffic channels (TRCH) which are bearers of 8, 16, 32, or 64 kb/s depending on the service supported. For voice traffic, moderate rate coded speech ADPCM or PCM can be supported on the traffic channels. For ISDN service types, two 64 kb/s TRCHs form the B channels and one 16 kb/s TRCH forms the D channel. Alternatively, the APC subchannel may either be separately modulated on its own CDMA channel, or may be time division multiplexed with a traffic channel or OW channel.

Each subscriber unit **111–118** of the present invention supports up to three simultaneous traffic channels. A subscriber unit is preferably commissioned to be a POTS subscriber unit **112** or an ISDN subscriber unit **115**. Although POTS subscriber unit **112** does not support ISDN service in accordance with the present invention, bandwidth resources can be dynamically allocated for either service type. For example, a POTS subscriber unit **112** can set up an additional POTS line and tear it down, or an ISDN subscriber unit **115** can dynamically add B channel-carrying bearers or tear them down. For dynamic bandwidth allocation of a POTS service, an active 32 kb/s ADPCM service modifies the bearer type from 32 kb/s to 64 kb/s unencoded data to support facsimile transmission. The presence of a facsimile call is determined by the RCS **104** by monitoring the existence of the 2100 Hz answer tone.

For dynamic bandwidth allocation of ISDN service, the RCS **104** monitors the ISDN D channel messages to determine when a B channel is requested and when it should be torn down. Once the RCS **104** determines the need for changing the bearer channel allocation, the RCS **104** initiates the dynamic bearer allocation procedure which will be described in greater detail hereinafter. The mapping of the three logical channels for TRCHs to the user data is shown below in Table 1:

TABLE 1

Mapping of service types to the three available TRCH channels

Service	TRCH(0)	TRCH(1)	TRCH(2)
16 kb/s POTS	TRCH/16	not used	not used
32 + 64 kb/s POTS (during BCM)	TRCH/32	TRCH/64	not used
32 kb/s POTS	TRCH/32	not used	not used
64 kb/s POTS	not used	TRCH/64	not used
ISDN D	not used	not used	TRCH/16
Digital LL @ 64 kb/s	TRCH/64	not used	not used
Digital LL @ 2 × 64 kb/s	TRCH/64	TRCH/64	not used
Analog LL @ 64 kb/s	TRCH/64	not used	not used

A subscriber unit **200** made in accordance with the present invention is generally shown in FIG. **3**. The subscriber unit **200** includes a receiver section **202** and a transmitter section **204**. An antenna **206** receives a signal from RCS **104**, which is filtered by a band-pass filter **208** having a bandwidth equal to twice the chip rate and a center frequency equal to the center frequency of the spread spectrum system's bandwidth. The output of the filter **208** is down-converted by a mixer **210** to a baseband signal using a constant frequency (Fc) local oscillator. The output of the mixer **210** is then spread spectrum decoded by applying a PN sequence for each logical channel to a mixer **212** within the PN Rx generator **214**. The output of the mixer **212** is input to a codec **218** which interfaces with the communicating entity **220**.

A baseband signal from the communicating entity **220**, for example the equipment shown in FIGS. **2A–2H**, is pulse code modulated by the codec **218**. Preferably, a 32 kb/s adaptive pulse code modulation (ADPCM) is used. The PCM signal is applied to a mixer **222** within a PN Tx generator **224**. The mixer **222** multiplies the PCM data signal with the PN sequence for each logical channel. The output of the mixer **222** is applied to low-pass filter **226** whose cutoff frequency is equal to the system chip rate. The output of the filter **226** is then applied to a mixer **228** and suitably up-converted, as determined by the carrier frequency Fc applied to the other terminal. The up-converted signal is then passed through a band-pass filter **230** and to a broadband RF amplifier **232** which drives an antenna **234**. Although two antennas **206**, **234** are shown, the preferred embodiment includes a diplexer and a single antenna for transmission and reception. The digital signal processor (DSP) **236** controls the acquisition process as well as the Rx and Tx PN generators **214**, **224**.

The base station **101**, which includes a plurality of RCSs **104**, **105**, **110** made in accordance with the present invention is shown in FIG. **4**. For simplicity, only one RCS **104** is

shown. The base station **101** includes a receiver section **302** and a transmitter section **304**. An antenna **306** receives a signal from the subscriber unit, which is filtered by a band-pass filter **308** having a bandwidth equal to twice the chip rate and a center frequency equal to the center frequency of the spread spectrum system's bandwidth. The output of the filter **308** is down-converted by a mixer **310** to a baseband signal using a constant frequency (Fc) local oscillator. The output of the mixer **310** is then spread spectrum decoded at each modem by applying a PN sequence to a mixer **312** within the PN Rx generator **314**. The output of the mixer **316** is then forwarded to the RDU **318**.

A baseband signal is received from the RDU **318**. Preferably, a 32 kb/s ADPCM signal is used. The ADPCM or PCM signal is applied to a mixer **322** within a PN Tx generator **324**. The mixer **322** multiplies the ADPCM or PCM data signal with the PN sequence. The output of the mixer **322** is applied to low-pass filter **326** whose cutoff frequency is equal to the system chip rate. The output of the filter **326** is then applied to a mixer **328** and suitably up-converted, as determined by the carrier frequency Fc applied to the other terminal. The up-converted signal is then passed through a band-pass filter **330** and to a broadband RF amplifier **332** which drives an antenna **334**. Although two antennas **306**, **334** are shown, the preferred embodiment includes a diplexer and only one antenna for transmission and reception. The digital signal processor (DSP) **336** controls the acquisition process as well as the Rx and Tx PN generators **314**, **324**.

The system provides a wireless link between the RCS **104** and the plurality of subscriber units **111–118**. In order to conserve as much bandwidth as possible, the system selectively allots the bandwidth required for supporting the data transmission rate required by particular communication. In this manner, the system ensures that the bandwidth is utilized efficiently. For example, referring back to Table 1, voiced communications may be effectively transmitted across a 32 kb/s adaptive pulse code modulation (ADPCM) channel. However, a high speed facsimile or data modem signal requires at least a 64 k/bs PCM signal to reliably transmit the communication. Additionally, although a subscriber unit **115** has paid for ISDN service, which includes two 64 kb/s B channels and one 16 kb/s channel, the entire ISDN capacity is rarely utilized at all times. Many different data transmission rates may also be utilized by originating and terminating nodes.

The originating and terminating nodes may comprise computers, facsimile machines, automatic calling and answering equipment, data networks or any combination of this equipment. For robust communication of data it is imperative to ensure that the communication system switches to the data transmission rate required by the communicating nodes prior to the transmission of any data. The system must be able to effectively allocate bandwidth and dynamically switch between these data communication rates on demand by the user. Modification of the transmission rate from a low rate (that supports voice communication) to a high rate (that supports encoded data communication) ensures that data will be reliably and quickly transmitted over a communication channel.

Additionally, if an ISDN D channel is presently allocated and one or two B channels are required, the system must ensure that the code generators are activated in order to support the communication.

For POTS, there are two basic scenarios where the bearer channel (TRCH channel) is either modified or a new bearer channel is added or torn down. First, the bearer channel is modified from 32 kb/s coded ADPCM type to 64 kb/s uncoded PCM service to support a facsimile transmission. Second, a new bearer channel is added or torn down when the subscriber goes off hook while an OA&M (overhead, administration and maintenance) call is in progress, or when an OA&M call is initiated while a POTS call is in progress. While an OA&M silent call is in progress, the subscriber unit **112** can determine that the user is initiating a new POTS call by monitoring the changes at the A/B interface between the subscriber unit **112** and the communication equipment **170** (on-hook/off-hook sensor). More detail regarding the dynamic allocation of bandwidth for POTS may be found in an application entitled CODE DIVISION **20** MULTIPLE ACCESS (CDMA) COMMUNICATION SYSTEM, Patent Application Serial No. Not Yet Known, filed Mar. 11, 1997, which is a continuation-in-part of Ser. No. 08/669,775, filed Jun. 27, 1996 by Lomp et al., which is incorporated herein by reference as if fully set forth.

For ISDN service, the dynamic bandwidth allocation refers to selective allocation of the D and B channels in a D, D and B, or D and 2B bearer channel configuration as needed and tearing them down when they are idle. The ISDN D channel carries control messaging and cannot be torn down while the ISDN call is still active. Accordingly, dynamic bandwidth allocation for ISDN service only relates to the addition and tearing down of B channels.

The procedure **400** for dynamic allocation of bandwidth for ISDN service in accordance with the present invention will be explained in greater detail with reference to FIG. **5**. When an ISDN call is initiated, the D channel is established first (step **402**). The bandwidth required for the particular application is communicated from the calling ISDN equipment to the called ISDN equipment through messages on the D channel (step **404**). These messages are in HDLC format and the RCS **104** monitors these messages via an HDLC interface (step **406**). Once the RCS **104** determines how many B channels are required (step **408**) it initiates establishment of these bearer channels over the air interface (step **410**). The RCS continues monitoring the HDLC messages on the D channel during the ISDN call (step **412**) and determines if additional B channels are to be switched in or out. In case that additional B channels should be switched in or out, the RCS **104** initiates the establishment or tearing down of the bearer channels over the air interface (step **414**).

A flow diagram showing simplified procedure **600** of the bearer channel establishment will be described with reference to FIGS. **6**A and **6**B. The subscriber unit **111** quickly ramps up its transmit power (step **602**) while sending the SAXPT (step **604**). When the RCS **104** detects the SAXPT (step **606**), it turns the traffic light bit to "red" on the FBCCH (step **608**) to signal to the subscriber unit **111** that it has been detected. The RCS **104** transmits the FBCCH (step **610**). The subscriber unit **111** monitors the FBCCH (step **612**) and it stops the fast ramp-up when it sees the "traffic light" turn red on the FBCCH (step **614**). The subscriber unit **111** then continues a slow ramp-up of its transmit power (step **616**) while transmitting the LAXPT (step **618**). When the RCS **104** acquires the LAXPT (step **620**), it informs the subscriber unit **111** via the SYNC-OK message on CTCH (step **622**). This completes the transmit power ramping up part of the access procedure.

After the subscriber unit **111** receives the SYNC-OK message on the CTCH (step **624**), it sends the access request message on the AXCH (step **626**). Upon receiving the request (step **628**) the RCS **104** confirms receipt of the AXCH message with a message on CTCH (step **630**), which

includes the assigned code seed. The subscriber unit **111** detects and acknowledges the bearer confirmation message that carries the assigned code seed on the AXCH (steps **632** and **634**), which the RCS **104** detects (step **636**). The code switchover is now negotiated and subscriber unit **111** and RCS **104** simultaneously switch to using the assigned code (steps **638** and **640**). The bearer channel is now established.

The layered protocol of the communications between the subscriber unit **111** and the RCS **104** is shown in FIG. **7** along with its correspondence to the layers of the Open Systems Interconnection (OSI) reference model. The physical (PHL) layer performs the following functions: 1) generation of CDMA codes; 2) synchronization between transmitter and receiver; 3) providing bearers to the Medium Access Control (MAC) layer; 4) spreading and transmission of bits on a CDMA code specified by the MAC and at a power level specified by the MAC; 5) measurement of received signal strength to allow automatic power control; and 6) generation and transmission of pilot signals. The MAC layers performs the following functions: 1) encoding and decoding for forward error correction (FEC); 2) assignment of CDMA codes; 3) encryption and decryption; 4) providing bearers which are encrypted and error-corrected as appropriate; 5) framing, error checking and discrimination of MAC peer to peer messages and data; 6) link control (DLC) frames; and 7) processing of automatic power control information. The data link control layer (DLC) provides an error-free link between higher level layers of the protocol stack.

As shown in FIG. **8**A, the signaling between the subscriber unit **111** and the RCS **104** involves the MAC and DLC layers of the protocol. Once the bearer channel for POTS service is established as described above, the service is available until it is unchanged until it is torn down or unless it has to be modified to support a facsimile transmission or a second call, in the case of a simultaneous OA&M call and POTS call. When there is an OA&M call in progress and the subscriber unit **111** initiates a POTS service call, the procedure as shown in FIG. **8**A is entered. This figure illustrates the simplified bearer switching method as initiated by the subscriber unit **111**. The messages go between the data link control layer (DLC), medium access control layer (MAC) of the subscriber unit **111**, and the corresponding layers in the RCS **104**. First, the DLC layer of the subscriber unit **111** initiates a switch request to the MAC layer of the subscriber unit **111**, which refers this switch request to the MAC layer of the RCS **104**. The RCS **104** sends a confirmation over the MAC layer to the subscriber unit **111** and also sends a switch indication to the DLC layer of the RCS **104**. In the subscriber unit **111**, the switch confirmation sent from the RCS **104** over the MAC layer is forwarded to the DLC layer of the subscriber unit **111**.

When there is a POTS service call in progress and the RCS **104** initiates an OA&M call to the same subscriber unit **111**, the procedure as shown in FIG. **8**B is entered. This figure illustrates the simplified bearer switching method as initiated by the RCS **104**. The RCS **104** initiates a switch indication message over the MAC layer to the subscriber unit **111**. The subscriber unit **111** then relays this message via the DLC layer.

The bearer channel establishment for ISDN will be explained with reference to FIGS. **9**A and **9**B. Steps **902**–**940** are the same as the corresponding steps **602**–**640** in FIGS. **6**A and **6**B. However, several additional steps are required after the subscriber unit **111** and the RCS **104** both switch to the assigned codes (steps **938** and **940**). Once the subscriber unit **111** and RCS **104** switch to assigned codes (steps **938** and **940**) the ISDN D channel becomes active. At this point the S/T interface between the subscriber unit **111** and the ISDN equipment is already active. The RCS **104** starts monitoring the D channel messages (step **942**), which are in HDLC format. Upon detecting that one or more B channels are needed for the particular application (step **944**) the RCS **104** initiates establishment of these bearer channels over the air interface. The process is then continued in accordance with the procedure shown in FIG. **5**. The MAC and DLC message flow for this procedure is the same as in FIG. **8**B.

The bearer channels for POTS and ISDN is switched in or out via the same message flow. Whether the bearer channel is switched in or out is indicated by appropriate values in corresponding fields of the D channel messages. Therefore the flow diagram in FIG. **8**B apply to both dynamic switching in of bearer channels as well as dynamic switching out of bearer channels.

Although the invention has been described in part by making detailed reference to certain specific embodiments, such details is intended to be instructive rather than restrictive. It will be appreciated by those skilled in the art that many variations may be made in the structure and mode of operation without departing from the spirit and scope of the invention as disclosed in the teachings herein.

What is claimed is:

1. A wireless digital CDMA communication system, including a base station and at least one subscriber unit, for transmitting a plurality of communications having independent data rates between a base station and a subscriber unit, the system comprising:

at least one base station comprising:

first means for processing a first communication for transmitting to said at least one subscriber unit including first means for determining the data rate required to support said first communication; and

first transmission means for transmitting communications at one of said plurality of data rates having data rate selection means responsive to said first determining means;

and at least one subscriber unit comprising:

means for establishing a communication channel having a capacity of a first data communication rate;

means for communicating at a second data communication rate, wherein said first data communication rate is higher than said second data communication rate;

second means for processing a second communication for transmitting to said base station including second means for determining the data rate required to support said communication;

second transmission means for transmitting communications at one of a plurality of data rates including data rate selection means responsive to said second determining means; and

means for establishing a ISDN channel including two B channels and a D channel; wherein said system selectively utilizes said B and said D channels depending upon the later rate required to support said desired communication.

2. A wireless digital code division multiple access (CDMA) communication system for dynamically switching data communication rates required by users, the system comprising:

at least a first communication station including:

means for establishing communication channels of predetermined data transmission rates;

means for transmitting a communication at an initial data rate using at least one channel;

means for monitoring said communication and determining an adjusted data rate desired for continued support of said communication;

means for allocating a sufficient number of channels for the communication based on the adjusted data rate such that the sum of the data rates of the allocated channels is at least equal to the adjusted data rate and is not greater than the adjusted data rate plus a predetermined rate; and

means for continuing the transmission of said communication within said allocated channels whereby said station dynamically adds or tears down channels for said communication by changing the number of allocated channels during said communication.

3. A wireless digital code division multiple access (CDMA) system as in claim **2** wherein said establishing means establishes D channels at a first data rate and B channels at a second data rate which is greater than said first data rate.

4. A wireless digital code division multiple access (CDMA) system as in claim **3** wherein said first data rate is 16 kb/s and said second date rate is 64 kb/s.

5. A wireless digital code division multiple access (CDMA) system as in claim **4** wherein the communication is an ISDN communication and said allocating means allocates a single D channel and a sufficient number of B channels for continued transmission of the communication from said station and said predetermined rate is equal to said second data rate.

6. A wireless digital code division multiple access (CDMA) system as in claim **3** wherein the communication is an ISDN communication and said allocating means allocates a single D channel and a sufficient number of B channels for continued transmission of the communication from said station and said predetermined rate is equal to said second data rate.

7. A wireless digital code division multiple access (CDMA) system as in claim **2** wherein a set of assigned channel codes are assigned for the communication and the allocating means allocates channels having codes within said assigned set.

8. A wireless digital code division multiple access (CDMA) system as in claim **2** further comprising:

at least a second communication station including:

means for receiving from said first station the communication within said allocated channels.

9. A wireless digital code division multiple access (CDMA) as in claim **8** wherein:

said second communication station further includes:

means for establishing return communication channels of different data transmission rates;

means for monitoring a return communication and determining a desired return data rate;

means for allocating a sufficient number of channels for the return communication based on desired the return data rate such that the total data rate of the allocated return channels is at least equal to the desired return data rate and is not greater than the desired return data rate plus a predetermined rate; and

means for transmitting the return communication within said allocated return channels; and

said first communication station includes means for receiving the return communication within said allocated return channels.

10. A wireless digital code division multiple access (CDMA) system as in claim **9** wherein each said establishing means establishes D channels at a first data rate and B channels at a second data rate which is greater than said first data rate.

11. A wireless digital code division multiple access (CDMA) system as in claim **10** wherein said first data rate is 16 kb/s and said second date rate is 64 kb/s.

12. A wireless digital code division multiple access (CDMA) system as in claim **10** wherein the communication and return communication are an ISDN communication; each said allocating means allocates a single D channel and a sufficient number of B channels; and said predetermined rates are equal to said second data rate.

13. A wireless digital code division multiple access (CDMA) as in claim **8** wherein said first communication station is a base station which further comprises:

a physical layer generating CDMA codes, synchronizing between said base station and subscriber units, providing bearers, spreading and transmitting bits on a CDMA code, measuring received signal strength to permit automatic power control, and generating transmission of pilot signals;

a medium access control (MAC) layer encoding and decoding for forward error correcting, assigning CDMA codes, encrypting and decrypting communication signals, encrypting and error-correcting to the bearers provided by the physical layer, framing, error checking and discriminating medium access control peer to peer messages and data, linking control frames, and processing automatic control information; and

a data link control layer providing an error-free link among the layers, wherein the data link control layer initiates changes in the allocation of channels based on determining the minimum desired data rate for communications channels via physical layer.

14. A wireless digital code division multiple access (CDMA) communication system as in claim **13** wherein said second communication station is a subscriber unit which further comprises:

a physical layer generating CDMA codes; synchronizing between said base station and said subscriber unit; providing bearers; spreading and transmitting bits on a CDMA code; measuring received signal strength to permit automatic power control; and generating transmission of pilot signals;

a MAC layer encoding and decoding for forward error correcting; assigning CDMA codes; encrypting and decrypting communication signals; encrypting and error-correcting to the bearers provided by the physical layer; framing; error checking and discriminating medium access control, peer to peer messages and data; linking control frames; and processing automatic control information; and

a data link control layer providing an error-free link among the layers, wherein the data link control layer initiates changes in the allocation of channels based on determining the minimum desired data rate for communications channels via physical layer.

15. A method for allocating bandwidth and dynamically switching between different bandwidths in a communication station of a code division multiple access (CDMA) system based upon the data communication rates required by a user comprising:

a) transmitting a communication at an initial data rate using at least one channel;

b) monitoring said communication and determining an adjusted data rate desired for continued support of said communication;

c) allocating a sufficient number of channels for the communication based on the adjusted data rate such that the total data rate of the allocated channels is at least equal to the adjusted data rate and is not greater than the adjusted data rate plus a predetermined rate; and

d) continuing transmission of said communication within said allocated channels whereby said communication station dynamically adds or tears down channels for said communication by changing the number of allocated channels during said communication.

16. A method according to claim **15** wherein steps b, c, and d are repeated during transmission of said communication to determine new adjusted data rates and new allocations of channels during said communication.

17. A method according to claim **15** wherein said communication station establishes D channels at a first data rate and B channels at a second data rate which is greater than said first data rate and said allocating includes the allocation of a single D channel and a sufficient number of B channels using said second data rate as said predetermined rate.

18. A method according to claim **17** wherein said communication station establishes D channels at a data rate of 16 kb/s and said B channels at a data rate of 64 kb/s.

* * * * *

EXHIBIT D

US006151332A

United States Patent [19]

Gorsuch et al.

[11] Patent Number: 6,151,332

[45] Date of Patent: Nov. 21, 2000

[54] **PROTOCOL CONVERSION AND BANDWIDTH REDUCTION TECHNIQUE PROVIDING MULTIPLE NB+D ISDN BASIC RATE INTERFACE LINKS OVER A WIRELESS CODE DIVISION MULTIPLE ACCESS COMMUNICATION SYSTEM**

[75] Inventors: **Thomas E. Gorsuch**, Indialantic; **Carlo Amalfitano**, Melbourne Beach, both of Fla.

[73] Assignee: **TANTIVY Communications, Inc.**, Melbourne, Fla.

[21] Appl. No.: **08/992,759**

[22] Filed: **Dec. 17, 1997**

Related U.S. Application Data

[60] Provisional application No. 60/050,277, Jun. 20, 1997, and provisional application No. 60/050,338, Jun. 20, 1997.

[51] **Int. Cl.**[7] **H04J 3/16**

[52] **U.S. Cl.** **370/466**; 370/468

[58] **Field of Search** 370/465, 466, 370/468, 469, 335, 342, 522, 524, 249; 375/200

[56] **References Cited**

U.S. PATENT DOCUMENTS

4,675,863	6/1987	Paneth et al.	370/50
4,817,089	3/1989	Paneth et al.	370/95
4,912,705	3/1990	Paneth et al.	370/95.1
5,022,024	6/1991	Paneth et al.	370/50
5,114,375	5/1992	Wellhausen et al.	446/246
5,282,222	1/1994	Fattouche et al.	375/1
5,325,419	6/1994	Connolly et al.	379/60
5,388,102	2/1995	Griffith et al.	370/512
5,412,429	5/1995	Glover	348/398
5,585,850	12/1996	Schwaller	348/388
5,617,423	4/1997	Li et al.	370/426
5,655,001	8/1997	Cline et al.	370/328
5,657,358	8/1997	Paneth et al.	375/356
5,687,194	11/1997	Paneth et al.	375/283
5,697,059	12/1997	Carney	455/34.1
5,845,211	12/1998	Roach, Jr.	455/436
5,854,786	12/1998	Henderson et al.	370/335

FOREIGN PATENT DOCUMENTS

0 526 106 A2	2/1993	European Pat. Off. .
0 682 423 A2	11/1995	European Pat. Off. .
0 719 062 A2	6/1996	European Pat. Off. .
WO 96/08934	3/1996	WIPO .
WO 96/37081	11/1996	WIPO .

OTHER PUBLICATIONS

Melanchuk, et al., "CDPD and Emerging Digital Cellular Systems," *Digest of Papers of COMPCON,* Computer Society Conference 1996, Technologies for the Information Superhighway, Santa Clara, CA., No. Conf. 41, pp. 2–8 (Feb. 25, 1996), XP000628458 Institute of Electrical and Electronics Engineers.

Primary Examiner—Huy D. Vu
Assistant Examiner—Alexander Boakye
Attorney, Agent, or Firm—Hamilton, Brook, Smith & Reynolds, P.C.

[57] **ABSTRACT**

A technique for integrating services digital network (ISDN) and code division multiple access (CDMA) or other digital wireless communication protocols by a technique that strips off lower protocol layers, such as layers one and two of the ISDN protocol and sending only layer three and above messages over a more efficient wireless protocol.

13 Claims, 4 Drawing Sheets

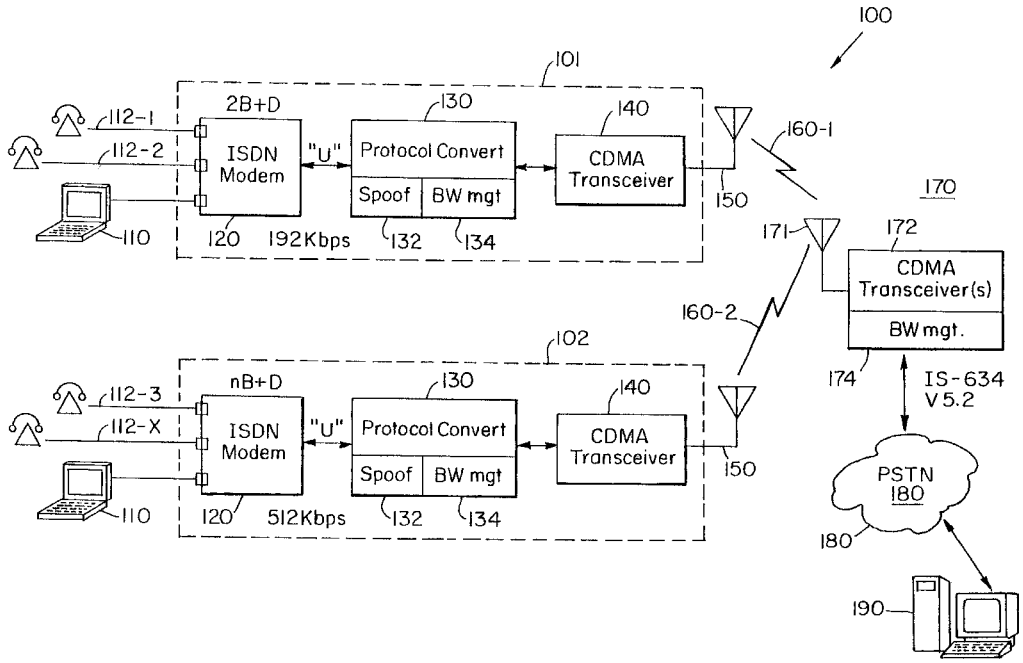

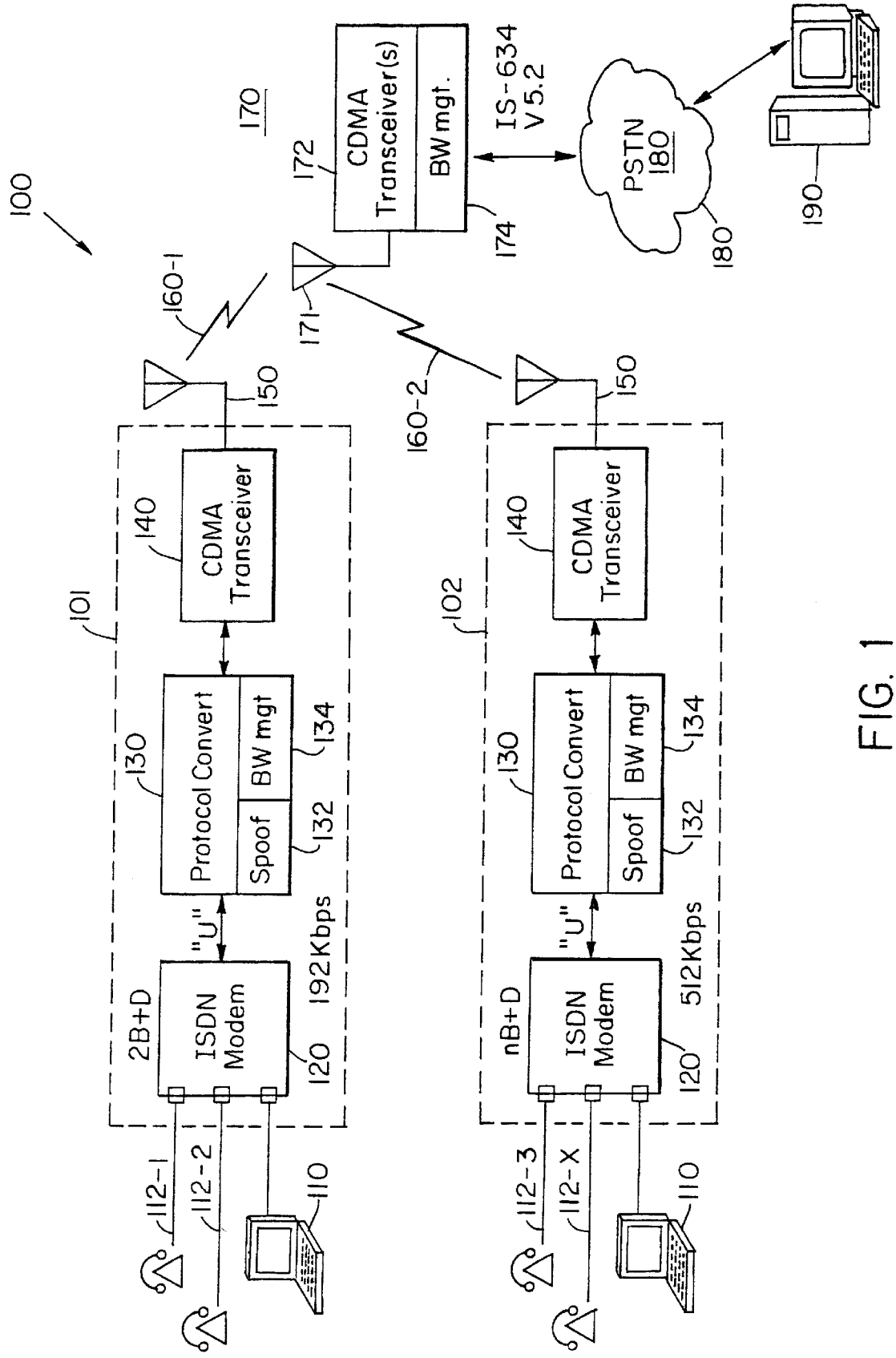
100
170
172
CDMA Transceiver(s)
BW mgt.
IS-634 V5.2
174
PSTN 180
180
190
160-1
171
160-2
150
150
101
102
140
CDMA Transceiver
140
CDMA Transceiver
130
Protocol Convert
BW mgt
Spoof
134
132
"U"
2B+D
ISDN Modem
192Kbps
120
nB+D
ISDN Modem
512Kbps
120
112-1
112-2
110
112-3
112-X
110

FIG. 1

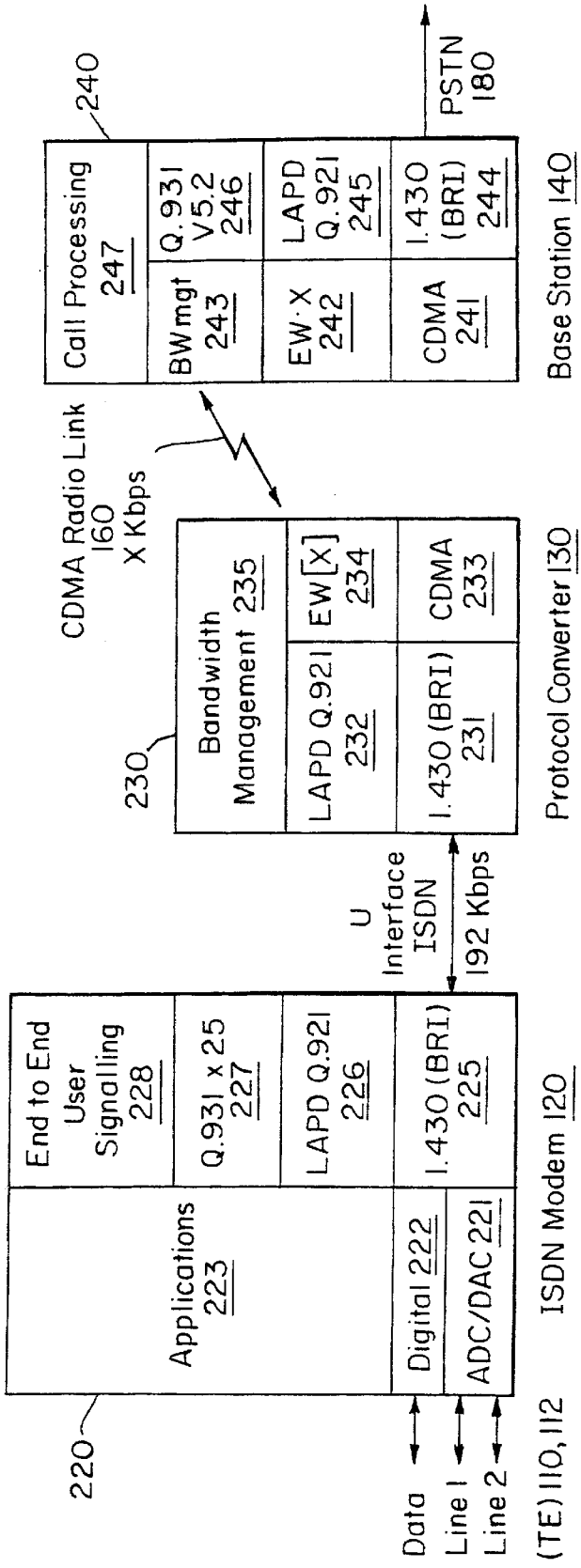
220
Applications 223
End to End User Signalling 228
Q.931 x 25 227
LAPD Q.921 226
Digital 222
ADC/DAC 221
I.430 (BRI) 225
Data
Line 1
Line 2
(TE) 110, 112
ISDN Modem 120
U Interface ISDN
192 Kbps
230
Bandwidth Management 235
LAPD Q.921 232
EW[X] 234
I.430 (BRI) 231
CDMA 233
Protocol Converter 130
CDMA Radio Link 160
X Kbps
240
Call Processing 247
BW mgt 243
Q.931 V5.2 246
EW·X 242
LAPD Q.921 245
CDMA 241
I.430 (BRI) 244
Base Station 140
PSTN 180

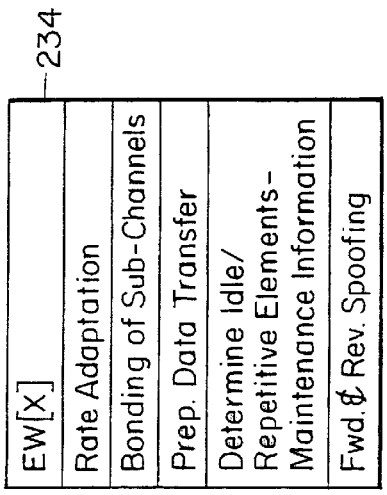
234
EW[X]
Rate Adaptation
Bonding of Sub-Channels
Prep. Data Transfer
Determine Idle/ Repetitive Elements-Maintenance Information
Fwd. & Rev. Spoofing

FIG. 2

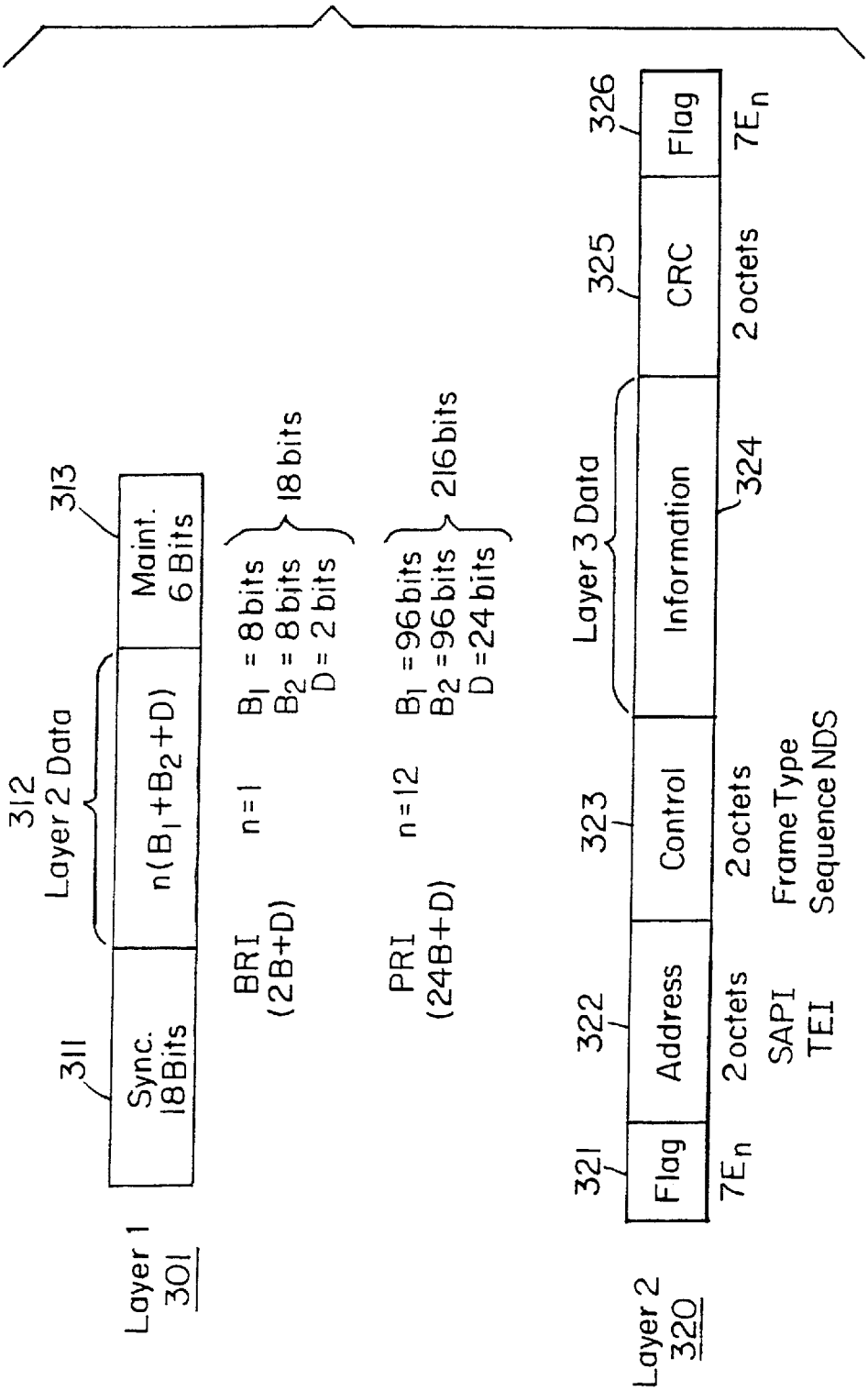
Layer 1
301
311
Sync.
18Bits
312
Layer 2 Data
n(B1+B2+D)
313
Maint.
6 Bits
BRI
(2B+D)
n=1
B1 = 8 bits
B2 = 8 bits
D = 2 bits
18 bits
PRI
(24B+D)
n=12
B1 =96 bits
B2 =96 bits
D =24 bits
216 bits
Layer 2
320
321
Flag
7En
322
Address
2octets
SAPI
TEI
323
Control
2octets
Frame Type
Sequence NDS
Layer 3 Data
324
Information
325
CRC
2 octets
326
Flag
7En

FIG. 3

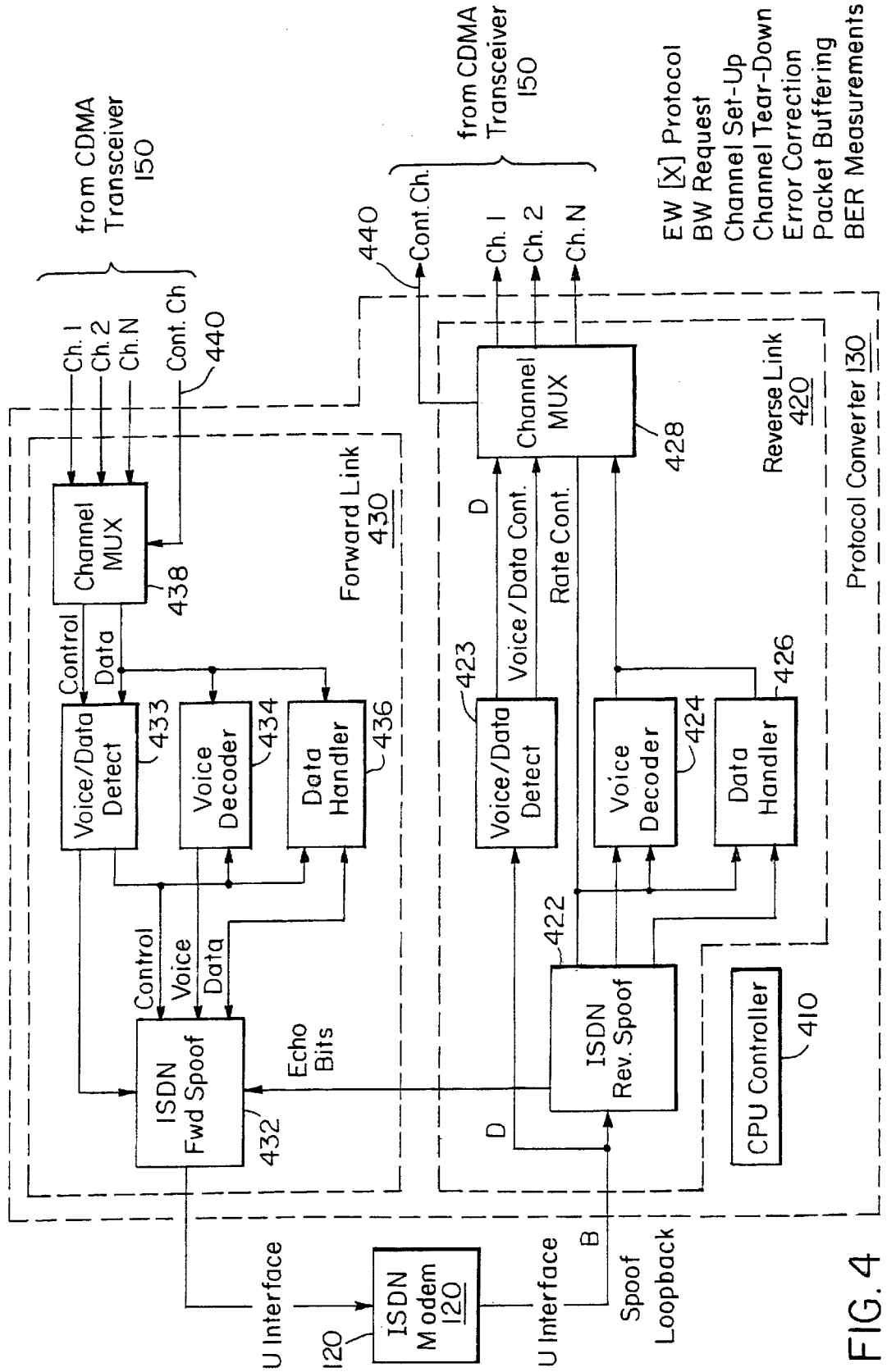
from CDMA Transceiver 150
Ch. 1
Ch. 2
Ch. N
Cont. Ch
440
Channel MUX
438
Control
Data
Voice/Data Detect
433
Voice Decoder
434
Data Handler
436
Forward Link 430
Control
Voice
Data
ISDN Fwd Spoof
432
Echo Bits
U Interface
120
ISDN Modem 120
U Interface
B
Spoof Loopback
D
Voice/Data Detect
423
Voice/Data Cont.
Rate Cont.
Channel MUX
428
Cont.Ch.
Ch. 1
Ch. 2
Ch. N
EW [X] Protocol
BW Request
Channel Set-Up
Channel Tear-Down
Error Correction
Packet Buffering
BER Measurements
Reverse Link 420
Voice Decoder
424
Data Handler
426
422
ISDN Rev. Spoof
CPU Controller
410
Protocol Converter 130

FIG. 4

PROTOCOL CONVERSION AND BANDWIDTH REDUCTION TECHNIQUE PROVIDING MULTIPLE NB+D ISDN BASIC RATE INTERFACE LINKS OVER A WIRELESS CODE DIVISION MULTIPLE ACCESS COMMUNICATION SYSTEM

CROSS REFERENCE TO RELATED APPLICATION(S)

This application claims the benefit of prior pending U.S. Provisional Application Ser. No. 60/050,277 filed Jun. 20, 1997 entitled "Protocol Conversion And Bandwidth Reduction Technique Providing Multiple nB+D ISDN Basic Rate Interface Links Over a Wireless Code Division of Multiple Access Communication System", and a prior pending U.S. Provisional Application Ser. No. 60/050,338 filed Jun. 20, 1997 entitled "Dynamic Bandwidth Allocation to Transmit a Wireless ISDN Protocol Across a Code Division Multiple Access (CDMA) Radio Link".

BACKGROUND OF THE INVENTION

The increasing use of wireless telephones and personal computers by the general population has led to a corresponding demand for advanced telecommunication services that were once thought to only be meant for use in specialized applications.

For example, in the late 1980's, wireless voice communication such as available with cellular telephony was the exclusive province of the businessman because of relatively high subscriber costs. The same was also true for access to remotely distributed computer networks, whereby until very recently, only business people and large institutions could afford the necessary expensive equipment to access computer networks.

However, the general population now increasingly wishes to not only have access to computer networks such as the Internet and private intranets, but also to have access to such networks in a wireless fashion as well. This is particularly of concern for the users of portable computers, laptop computers, hand-held personal digital assistants, and the like, who would prefer to access such networks without being tethered to a telephone line. There still is no widely available satisfactory solution for providing low cost, high speed access to the Internet and other computer networks using the existing wireless telephone systems such as cellular. This unfortunate situation is most likely an artifact of several circumstances. For example, the typical manner of providing high speed data service in the business environment over the wireline network is not readily adaptable to the voice grade service available in most homes or offices. Such standard high speed data services therefore do not lend themselves well to efficient transmission over standard cellular wireless handsets.

Furthermore, existing cellular network was originally designed only to deliver voice services. At present, the modulation schemes in use continue their focus on delivering voice information with the maximum data rate services in the range of only 9.6 kbps being available. This is because the cellular switching network in most countries, including the United States, uses analog voice channels having a bandwidth from about 300 to 3600 Hertz. Such a low frequency channel does not lend itself directly to transmitting data at rates of 28.8 kilobits per second (kbps) or even 56.6 kbps that is now commonly available using inexpensive wire line modems, and which rates are now thought to be the minimum acceptable data rates for Internet access.

Switching networks with higher speed building blocks are just now coming into use in the United States. Although certain wireline networks, called Integrated Services Digital Networks (ISDN), capable of higher speed data access have been known for a number of years, their costs have only been recently reduced to the point where they are attractive to the residential customer, even for wireline service. Although such networks were known at the time that cellular systems were originally deployed, for the most part, there is no provision for providing ISDN-grade data services over cellular network topologies.

SUMMARY OF THE INVENTION

The present invention provides high speed data and voice service over standard wireless connections via a unique integration of ISDN protocols and existing cellular signaling such as is available with Code Division Multiple Access (CDMA) type digital cellular systems.

The technique consists of establishing a logical connection using a higher layer protocol, such as a network layer protocol, from an ISDN subscriber unit, such as may be connected to a portable computer node, to an intended peer node, such as another computer. The network layer logical connection is made through a wireless channel which provides a physical layer connection between the portable computer node, through a base station, and the intended peer node. In response to relatively low utilization of the wireless channel, the physical layer channel is released while maintaining the appearance of a network layer connection to the higher level protocols.

This has two consequences. First, it frees wireless channel bandwidth for use by other subscriber units, without the overhead associated with having to set up an end to end connection each time that data needs to be transferred. In addition, and perhaps more importantly, by allocating wireless channels only when needed, the bandwidth necessary to provide a temporary but very high speed connection at critical times. These may occur, for example, when a particular subscriber unit requests that a web page file be downloaded from the Internet.

More specifically, the technique, which is here called spoofing, involves stripping off the two lower layers of the ISDN protocol while reformatting layer three and higher layer messages for transmission using a more efficient CDMA based encapsulated protocol.

For example, the network level connection can be maintained by looping back data and removing the sync and maintenance bits at the ISDN physical layer one. Spoofing of the second layer of the ISDN protocol, e.g., the LAPD protocol, is carried out by removing all repetitive protocol elements such as the flag bits from the ISDN data link layer two messages.

BRIEF DESCRIPTION OF THE DRAWINGS

The foregoing and other objects, features and advantages of the invention will be apparent from the following more particular description of preferred embodiments of the invention, as illustrated in the accompanying drawings in which like reference characters refer to the same parts throughout the different views.

FIG. **1** is a block diagram of a wireless communication system making use of a protocol converter according to the invention.

FIG. **2** is an Open Systems Interconnect (OSI) style layered protocol diagram showing the relationship between various protocols used in the invention.

FIG. **3** depicts ISDN layer one and layer two frame formats.

FIG. **4** is a detailed block diagram of the protocol converter which performs spoofing and bandwidth allocation according to the invention.

DETAILED DESCRIPTION OF THE INVENTION

Turning attention now to the drawings more particularly, FIG. **1** is a block diagram of a system **100** for providing high speed data and voice service over a wireless physical link by seamlessly integrating Integrated Services Digital Network (ISDN) formatted signaling such as received from a standard wireline ISDN modem with the signaling required by a digitally modulated wireless air interface such as Code Division Multiple Access (CDMA).

The system **100** consists of two different types of components, including subscriber units **101***a* and **101***b* (collectively **101**) and base stations **170**. The subscriber units **101** and base stations **170** cooperate to provide the functions necessary in order to achieve the desired implementation of the invention. The subscriber unit **101** provides wireless data services to a portable computing device **110** such as a laptop computer, portable computer, personal digital assistant (PDA) or the like. The base station **170** cooperates with the subscriber unit **101** to permit the transmission of data between the portable computing device **110** and other computing devices **190** such as those connected to the base station **170** either directly or through the Public Switched Telephone Network (PSTN) **180** via the radio channels **160**.

More particularly, data and/or voice services are also provided by the subscriber unit **101** to the portable computer **110** as well as one or more other devices such as telephones **112-1**, **112-2** (collectively referred to herein as telephones **112**. (The telephones **112** themselves may in turn be connected to other modems and computers which are not shown in FIG. **1**). In the usual parlance of ISDN, the portable computer **110** and telephones **112** are referred to as terminal equipment (TE). The subscriber unit **101** provides the functions referred to as a network termination type 1 (NT-1). The particular subscriber unit labeled **101***a* is meant to operate with a so-called basic rate interface (BRI) type ISDN connection that provides two bearer or "B" channels and a single data or "D" channel with the usual designation being 2B+D.

The subscriber unit **101** itself consists of an ISDN modem **120**, a device referred to herein as the protocol converter **130** that performs the various functions according to the invention including spoofing **132** and bandwidth management **134**, a CDMA transceiver **140**, and subscriber unit antenna **150**. The various components of the subscriber unit **101** may be realized in discrete devices or as an integrated unit. For example, an existing conventional ISDN modem **120** such as is readily available from any number of manufacturers may be used together with existing CDMA transceivers **140**. In this case, the unique functions are provided entirely by the protocol converter **130** which may be sold as a separate device. Alternatively, the ISDN modem **120**, protocol converter **130**, and CDMA transceiver **140** may be integrated as a single subscriber unit **101**.

The ISDN modem **120** converts data and voice signals between the terminal equipment **110** and **112** to format required by the standard ISDN "U" interface. The U interface is a reference point in ISDN systems that designates a point of the connection between the network termination (NT) and the telephone company.

The protocol converter **130** performs spoofing **132** and basic bandwidth management **134** functions, which will be described in greater detail below. In general, spoofing **132** consists of insuring that the subscriber unit **101** appears to the terminal equipment **110**, **112** as though it is connected to the public switched telephone network **180** on the other side of the base station **170** at all times. The bandwidth management function **134** is responsible for allocating and deallocating CDMA radio channels **160** as required.

The CDMA transceiver **140** accepts the data from the protocol converter **130** in a particular format and reformats this data in appropriate form for transmission through a subscriber unit antenna **150** over the CDMA radio channels **160-1**. Data is then received at the base station **170** and is processed by the base station equipment **172**. The base station unit **170** typically consists of one or more base station antennas **171**, multiple CDMA transceivers **172**, and a bandwidth management functionality **174**. The base station **170** couples radio signals to the public switch telephone network **180** in a manner which is well known in the art. The base station **170** may communicate with the PSTN **180** over any number of different efficient communication protocols such as primary rate ISDN, or other LAPD based protocols such as IS-634 or V5.2.

It should also be understood that signals travel bidirectionally, i.e., data signals originate at the portable computer **110** are coupled to the PSTN **180**, and data signals received from the PSTN **180** are coupled to the portable computer **110**.

Other types of subscriber units such as unit **101***b* may be used to provide higher speed data services. Such subscriber units **102** typically provide a service referred to as nB+D type service that may use a so-called Primary Rate Interface (PRI) type ISDN protocol with the terminal equipment **110**, **112**. These units provide a higher speed service such as 512 kbps across the U interface. Operation of the protocol converter **130** and CDMA transceiver **140** are similar for the nB+D type subscriber unit **101***b* as previously described for subscriber unit **101***a* with the understanding that the radio links **160-2** to support subscriber unit **102** must either be greater in number or each have a greater bandwidth.

Turning attention now to FIG. **2**, the invention may be better understood in the context of a Open Systems Interconnect (OSI) layered protocol model diagram. The three protocol stacks **220**, **230**, and **240** are for the ISDN modem **120**, protocol converter **130**, and base station **170**, respectively.

The protocol stack **220** used by the ISDN modem **120** is conventional for ISDN communications and includes, on the terminal equipment side, the analog to digital conversion (and digital to analog conversion) **221** and digital data formatting **222** at layer one, and an applications layer **223** at layer two. On the U interface side, the protocol functions include Basic Rate Interface (BRI) such as according to standard 1.430 at layer one, a LAPD protocol stack at layer two, such as specified by standard Q.921, and higher level network layer protocols such as Q.931 or X.227 and high level end to end signaling **228** required to establish network level logical connections.

The lower layers of the protocol stack **220** aggregate two bearer (B) channels to achieve a single **128** kilobits per second data channel in a manner which is well known in the art. Similar functionality can be provided in a primary rate interface such as used by subscriber unit **102** to aggregate multiple B channels to achieve up to 512 kilobits per second data rate over the U interface.

The protocol stack **230** associated with the protocol converter **130** consists of a layer one basic rate interface **231** and a layer two LAPD interface **232** on the U interface side, to match the ISDN modem stack **220**. At the next higher network layer, a bandwidth management functionality **235** spans both the U interface side and the CDMA radio link side of the protocol converter stack **230**. On the CDMA radio link side **160**, the protocols depend upon the particular air interface in use. An efficient wireless protocol, referred to herein as EW[x] **234**, encapsulates the layer one **231** and layer two **232** ISDN protocol stacks in such a manner that the terminal equipment **110** may be disconnected from one ore more CDMA radio channels **160** without interrupting the higher network layer connection.

The base station **170** contains the matching CDMA **241** and EW[x] **242** protocols as well as bandwidth management **243**. On the PSTN side, the protocols may convert back to basic rate interface **244** and LAPD **245** only include higher level network layer protocols as Q.931 or V5.2 **246**.

Call processing functionality **247** allows the network layer to set up and tear down radio channels **160** and provide other processing required to support end to end connections between nodes as is known in the art.

The particular invention of interest herein is in the protocol stack **230** associated with the protocol converter **130**. In particular, the spoofing function performed by EW[x] **234** include the necessary functions to keep the U interface for the ISDN connection properly maintained, even without the continuous availability of a radio channel **160** of sufficient bandwidth for the duration of the network layer connection. This is necessary because ISDN expects to send and receive a continuous stream of synchronous data bits regardless of whether the terminal equipment at either end actually has any data to transmit. Without the spoofing function **132**, radio links **160** of sufficient bandwidth to support at least a 192 kbps data rate would otherwise be required throughout the duration of an end to end network level connection, whether or not data actually needs to be transmitted.

EW[x] **234** therefore involves having the CDMA transceiver **140** loop back continuous synchronous data bits over the ISDN communication path to spoof the terminal equipment **110**, **112** into believing that a sufficiently wide wireless communication path **160** is continuously available. However, only when there is actually data present on the terminal equipment to the wireless transceiver **140** does the side bandwidth be allocated. Therefore, unlike the prior art, the network layer need not allocate the assigned wireless bandwidth over the radio channels **160** for the entirety of the network layer communications session. That is, when data is not being transmitted between the portable computer **110** and the remote node bandwidth management function **235** deallocates initially assigned radio channel bandwidth **160** and makes it available for another transceiver and another subscriber unit **101**.

This is accomplished operating on both the ISDN layer one and layer two frames. As shown in FIG. **3**, the format of an ISDN layer one frame **310** is shown as including a number of fields such as a sync bit field **311**, data field **312**, and maintenance bit field **313**. The data field **312** includes either 18 bits or 216 bits, depending upon whether the device is a BRI device **101***a* or PRI type device **101***b*.

The layer two frame **320** format includes an initial flag field **312**, address field **322**, control field **323**, layer **10** three data field **324**, a cyclic redundancy check field **325**, one or more terminating flag fields **326**. The flag fields typically include the binary patterns 7E (hexadecimal).

The address field **322** identifies service access points and terminal equipment addresses, the control field **323** identifies frame type and sequence numbers, and the cyclic redundancy check field **325** includes checking information as is known in the art. The information field **324** encapsulates information used by layer three.

In accordance with the invention, information specific to layer one and layer two is stripped off by the spoofer **132** so that only layer three information is fed to the CDMA function **323**. In addition, the EW[x] protocol **234** loops back all repetitive "echo bits" such as the layer two flag bits **321**, **326**, and layer one sync and maintenance bits, such as to keep the U interface operating as though the higher level wireless connection was continuously available.

Therefore, only non-repetitive layer three information is sent through the CDMA transceiver, which occurs only during session set up and when actual information must be sent from end to end.

To understand more fully how this is accomplished, turn now to FIG. **4** which is a more detailed functional diagram of the components of a protocol converter **130**. It can be seen that an exemplary protocol converter **130** consists of a microcontroller **410**, reverse link processing **420**, and forward link processing **430**. Reverse link processing **420** further includes ISDN reverse spoofer **422**, voice data detector **423**, voice decoder **424**, packet processor **426**, and channel multiplexer **428**. The forward link processing **430** contains analogous functions operating in the reverse direction, including a channel multiplexer **438**, voice data detector **433**, voice decode **434**, packet processor **436**, and ISDN forward spoofer **432**.

In operation, the reverse link **420** first accepts channel data from the ISDN modem **120** over the U interface and forwards it to the ISDN reverse spoofer **432**. Any echo bits (e.g., the aforementioned layer one sync bits **311** and maintenance bits **313** as well as layer two flag bits **321**, address **322**, control **323**, and CRC **325** bits) are removed from data received and, once extracted, and sent to the forward spoofer **432**. The remaining layer three and higher level bits are thus information that needs to be send over a wireless link.

This extracted data is sent to the voice decoder **424** or packet processor **426**, depending upon the type of data being processed.

Any D channel data from the ISDN modem **120** is sent directly to voice data detection **423** for insertion on the D channel inputs to the channel multiplexer **428**. The voice data detection circuit **423** determines the content of the D channels by analyzing commands received on the D channel.

D channel commands may also be interpreted to control a class of wireless services provided. For example, the controller **410** may store a customer parameter table that contains information about the customers desired class of service which may include parameters such as maximum data rate and the like. Appropriate commands are thus sent to the channel multiplexer **428** to request one or more required radio channels **160** for communication. Then, depending upon whether the information is voice or data, either the voice decoder **424** or packet processor **426** begins feeding data inputs to the channel multiplexer **428**.

It should also be understood that each of the radio channels **160** is not necessarily of a sufficient bandwidth to individually carry an ISDN bandwidth of 56 kbps or even 128 kbps. Rather, in the preferred embodiment, the radio channels **160** are actually rather narrow in bandwidth, such as only sufficiently wide enough to support, say, an 8 kbps

data rate. The radio channels **160** are thus allocated to particular network layer connections only upon demand. For more details of a preferred process for allocating radio channels **160**, reference should be made to our co-pending U.S. application entitled "Dynamic Bandwidth Allocation to Transmit a Wireless Protocol Across a Code Division Multiple Access (CDMA) Radio Link," Ser. No. 08/992,760, filed on even date herewith and assigned to H.Q. Wireless, Inc., the assignee of this application.

In any event, the channel multiplexer **428** performs the necessary multiplexing of radio channels **160**.

The channel multiplexer **428** may make further use of a voice data control signals provided by the voice data detection circuits **423**, depending upon whether the information is voice or data.

In addition, the CPU controller **410**, operating in connection with the channel multiplexer **428**, provides the necessary implementation of the EW[x] protocol between the subscriber unit **101** and the base station **170**. For example, radio channel requests, channel setup, and channel tear down commands are sent via commands placed on a control channel **440**. These commands are intercepted by the equivalent functionality in the base station **170** to cause the proper allocation of radio frequency channels **160** to particular connections.

The packet processor **426** provides an estimate of the data rate required to the CPU controller **410** so that appropriate commands can be sent over the control channel **440** to allocate an appropriate number of radio channels. The packet processor **426** may also perform packet assembly and buffering of the layer three data into the appropriate format for transmission over the CDMA radio links **160**.

The forward link **430** operates in analogous fashion. In particular, signals are first received from the channels **160** by the channel multiplexer **438**. In response to receiving information on the control channels **440**, control information is routed to the voice data detection circuit **433**. Upon a determination that the received information contains data, the received bits are routed to the packet processor **436**. Alternatively, the information is voice information, and routed to the voice decoder **434**.

Voice and data information are then sent to the ISDN forward spoofer **432** for construction into proper ISDN protocol format. This assembly of information is coordinated with the receipt of echo bits from the ISDN reverse spoofer **422** to maintain the proper expected synchronization on the U interface with the ISDN modem **120**.

It can now be seen how an ISDN communication path may be paused even though wireless bandwidth initially allocated for transmission is reassigned to other uses when the ISDN path is idle. In particular, the reverse **422** and forward **432** spoofers cooperate to loop back non-information bearing signals, such as flag patterns, sync bits, and other necessary information, so as to spoof the data terminal equipment connected to the ISDN modem **120** into continuing to operate as though the allocated wireless path over the CDMA transceiver **150** is continuously available.

Therefore, unless there is an actual need to transmit information from the terminal equipment being presented to the channel multiplexers **428**, or actual information being received from the channel multiplexers **438**, the invention may deallocate initially assigned bandwidth thus making it available for another CDMA transceiver **150** associated with another subscriber unit **101** of the wireless system **100**.

The CPU controller **410** may also perform additional functions to implement the EW[x] protocol, including error correction, packet buffering, and bit error rate measurement.

EQUIVALENTS

While this invention has been particularly shown and described with references to preferred embodiments thereof, it will be understood by those skilled in the art that various changes in form and details may be made therein without departing from the spirit and scope of the invention as defined by the appended claims.

For example, other digital wireless modulation schemes and services may be used that provide multiple access to a given radio channel, such as frequency division multiple access (FDMA) or time division multiple access (TDMA). However, at the present time FDMA modulation schemes do not appear to be as efficient as CDMA since they may require multiple channel radio frequency circuits to accomplish the same results herein. Furthermore, TDMA protocols may require additional synchronization, especially for the reverse link.

Those skilled in the art will recognize or be able to ascertain using no more than routine experimentation, many equivalents to the specific embodiments of the invention described specifically herein. Such equivalents are intended to be encompassed in the scope of the claims.

What is claimed is:

1. For use with a digital communication network having a first digital communication path for coupling Integrated Services Digital Network (ISDN) communication signals with a first wireless transceiver at a first site, said first wireless transceiver being operative to conduct wireless communications with a second wireless transceiver at a second site, a method of controlling bandwidth utilization of said network comprising the steps of:

(a) in response to establishment of a communication session between said first and second sites, controlling said first wireless transceiver to appear to said first digital communication path as though the bandwidth is continuously available during said communication session for wireless communications between said first and second transceivers, irrespective of the need to transport ISDN communication signals between said first and second sites; and

(b) in the absence of said need to transport ISDN communication signals between said first and second sites, making said bandwidth available for wireless communication by another wireless transceiver of said digital communication network.

2. A method as in claim **1** additionally comprising the step of:

(c) maintaining a connection at a network layer above a data link layer by establishing a lower level connection and using radio frequency bandwidth only when required.

3. A method as in claim **1** additionally comprising the step of:

looping back synchronizing and maintenance bits on the ISDN link to spoof an ISDN physical layer protocol.

4. A method as in claim **1** additionally comprising the step of:

looping back an LAPD layer protocol by removing flag bits.

5. For use with a digital communication network having a first digital communication path for coupling data communication signals with a first wireless transceiver at a first site, said first wireless transceiver being operative to conduct wireless communications with a second wireless transceiver at a second site, a method of controlling wireless communication bandwidth comprising the steps of:

(a) in response to establishment of a communication session between said first and second sites, controlling said first wireless transceiver to appear to said first digital communication path as though the bandwidth is continuously available during said communication session for wireless communications between said first and second transceivers, irrespective of a need to transport data communication signals between said first and second sites; and

(b) in the absence of said need to transport data communication signals between said first and second sites, making said bandwidth available for wireless communication by another wireless transceiver of said digital communication network.

6. A method as in claim **5** additionally comprising the step of:

(c) maintaining a connection at a network layer above a data link layer by establishing a lower level connection and using radio frequency bandwidth only when required.

7. A method as in claim **6** additionally comprising the step of:

(d) looping back synchronizing and maintenance bits on the link layer to spoof a physical layer protocol.

8. A method as in claim **6** additionally comprising the step of:

(e) looping back a higher layer protocol by removing flag bits.

9. A method as in claim **5** wherein the first and second wireless transceivers use Code Division Multiple Access (CDMA) to conduct wireless communication.

10. A digital communication system comprising:

a first wireless transceiver located at a first site, said first wireless transceiver being coupled to receive data communication signals from a first digital communication path, and being operative to conduct wireless communications:

a second wireless transceiver located at a second site, said second wireless transceiver being operative to conduct wireless communication with said first wireless transceiver;

means for establishing a communication session between said first and second sites, and for controlling said first wireless transceiver to appear to said first digital communication path as though communication bandwidth is continuously available during said communication session for wireless communication between said first and second transceivers, irrespective of a need to transport data communication signals between said first and second sites;

means for making said bandwidth available for wireless communication by another wireless transceiver of said digital communication network, in the absence of said need to transport data communication signals between said first and second sites; and

means for maintaining a connection at a network layer above a data link layer by establishing a lower level connection and using radio frequency bandwidth only when required.

11. A system as in claim **10** additionally comprising:

means for looping back synchronizing and maintenance bits on the like layer to spoof a physical layer protocol.

12. A system as in claim **10** additionally comprising:

means for looping back a higher layer protocol by removing flag bits.

13. A system as in claim **10** wherein the first and second wireless transceivers use Code Division Multiple Access (CDMA) to conduct wireless communication.

* * * * *

EXHIBIT E

US006181949B1

(12) **United States Patent**
Ozluturk et al.

(10) **Patent No.: US 6,181,949 B1**
(45) **Date of Patent: Jan. 30, 2001**

(54) **METHOD OF CONTROLLING INITIAL POWER RAMP-UP IN CDMA SYSTEMS BY USING SHORT CODES**

(75) Inventors: **Fatih M. Ozluturk**, Port Washington; **Gary R. Lomp**, Cenerport, both of NY (US)

(73) Assignee: **InterDigital Technology Corporation**, Wilmington, DE (US)

(*) Notice: Under 35 U.S.C. 154(b), the term of this patent shall be extended for 0 days.

(21) Appl. No.: **09/003,104**

(22) Filed: **Jan. 6, 1998**

(51) **Int. Cl.**[7] **H04B 7/00**
(52) **U.S. Cl.** **455/522**; 455/69; 375/200
(58) **Field of Search** 455/510, 522, 455/67.1, 69, 437, 452, 67.4; 375/200

(56) **References Cited**

U.S. PATENT DOCUMENTS

4,811,421	3/1989	Havel et al.	455/69
5,022,049	6/1991	Abrahamson et al.	375/1
5,056,109	10/1991	Gilhousen et al.	375/1
5,113,525	5/1992	Andoh	455/127
5,159,283	10/1992	Jensen	330/129
5,235,614	8/1993	Bruckert et al.	375/1
5,257,283	10/1993	Gilhousen et al.	375/1
5,265,119	11/1993	Gilhousen et al.	375/1
5,267,262	11/1993	Wheatley, III	375/1
5,297,162	3/1994	Lee et al.	375/1
5,309,474	5/1994	Gilhousen et al.	375/1
5,327,455	7/1994	De Gaudenzi et al.	375/1
5,353,302	10/1994	Bi	375/1
5,353,352	10/1994	Dent et al.	380/37
5,377,183	12/1994	Dent	370/18
5,414,728	5/1995	Zehavi	375/200
5,430,760 *	7/1995	Dent	375/200
5,442,662	8/1995	Fukasawa et al.	375/205
5,446,756	8/1995	Mallinckrodt	375/200
5,528,593 *	6/1996	English et al.	370/84

FOREIGN PATENT DOCUMENTS

0565507	10/1993	(EP)	H04B/7/005
02256331	10/1990	(JP)	H04B/7/26

* cited by examiner

Primary Examiner—Daniel S. Hunter
Assistant Examiner—Darnell R. Armstrong
(74) *Attorney, Agent, or Firm*—Volpe & Koenig, P.C.

(57) **ABSTRACT**

A system and method of controlling transmission power during the establishment of a channel in a CDMA communication system utilize the transmission of a short code from a subscriber unit to a base station during initial power ramp-up. The short code is a sequence for detection by the base station which has a much shorter period than a conventional spreading code. The ramp-up starts from a power level that is guaranteed to be lower than the required power level for detection by the base station. The subscriber unit quickly increases transmission power while repeatedly transmitting the short code until the signal is detected by the base station. Once the base station detects the short code, it sends an indication to the subscriber unit to cease increasing transmission power. The use of short codes limits power overshoot and interference to other subscriber stations and permits the base station to quickly synchronize to the spreading code used by the subscriber unit.

10 Claims, 11 Drawing Sheets

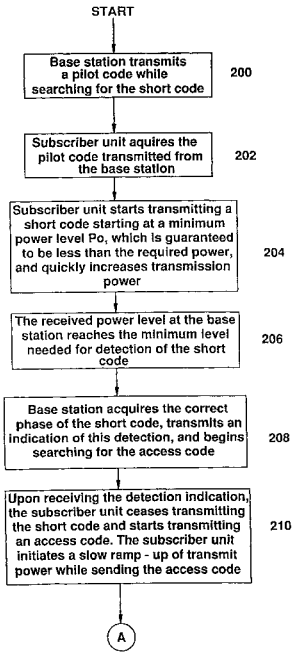

FIG.1

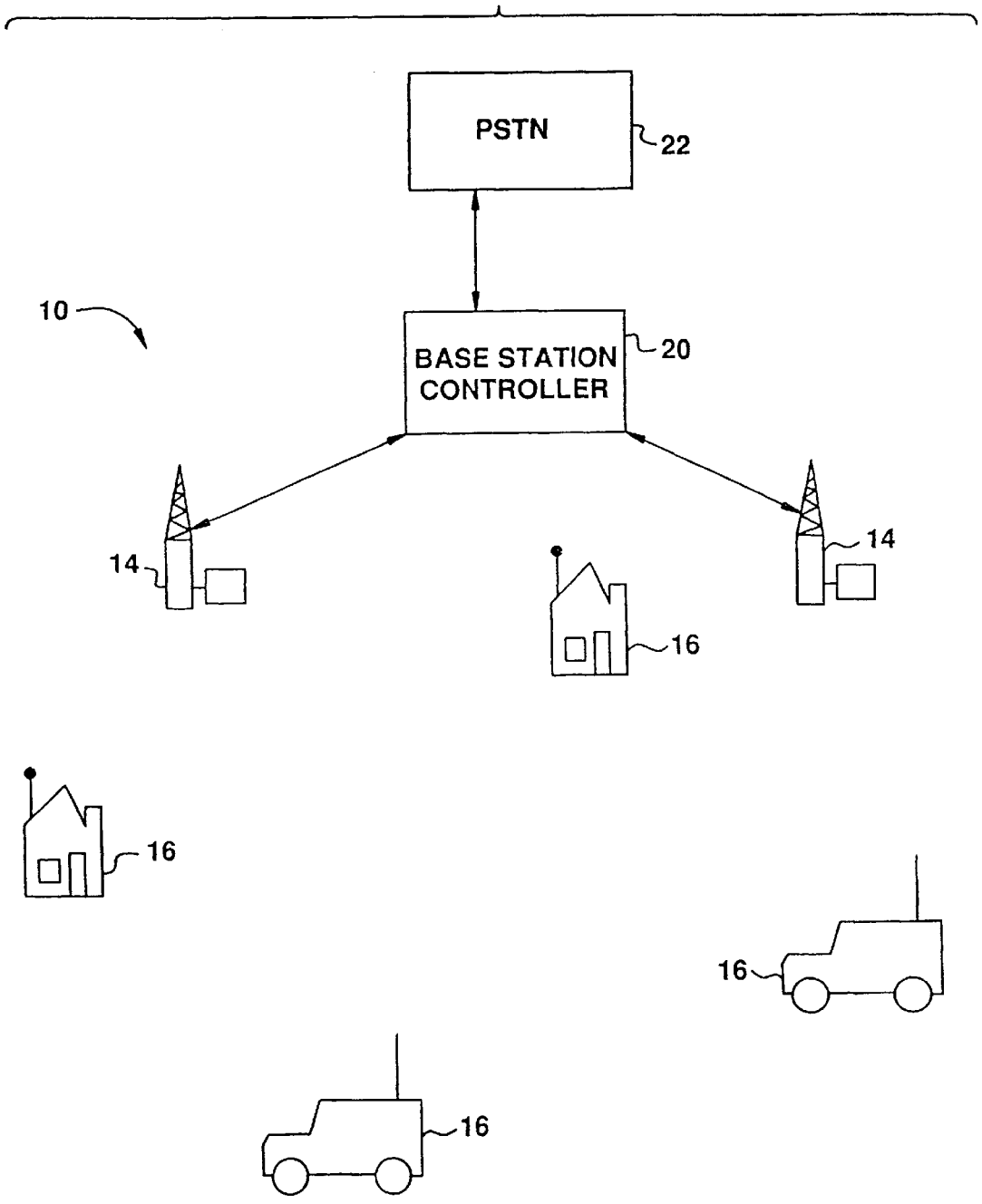

FIG.2

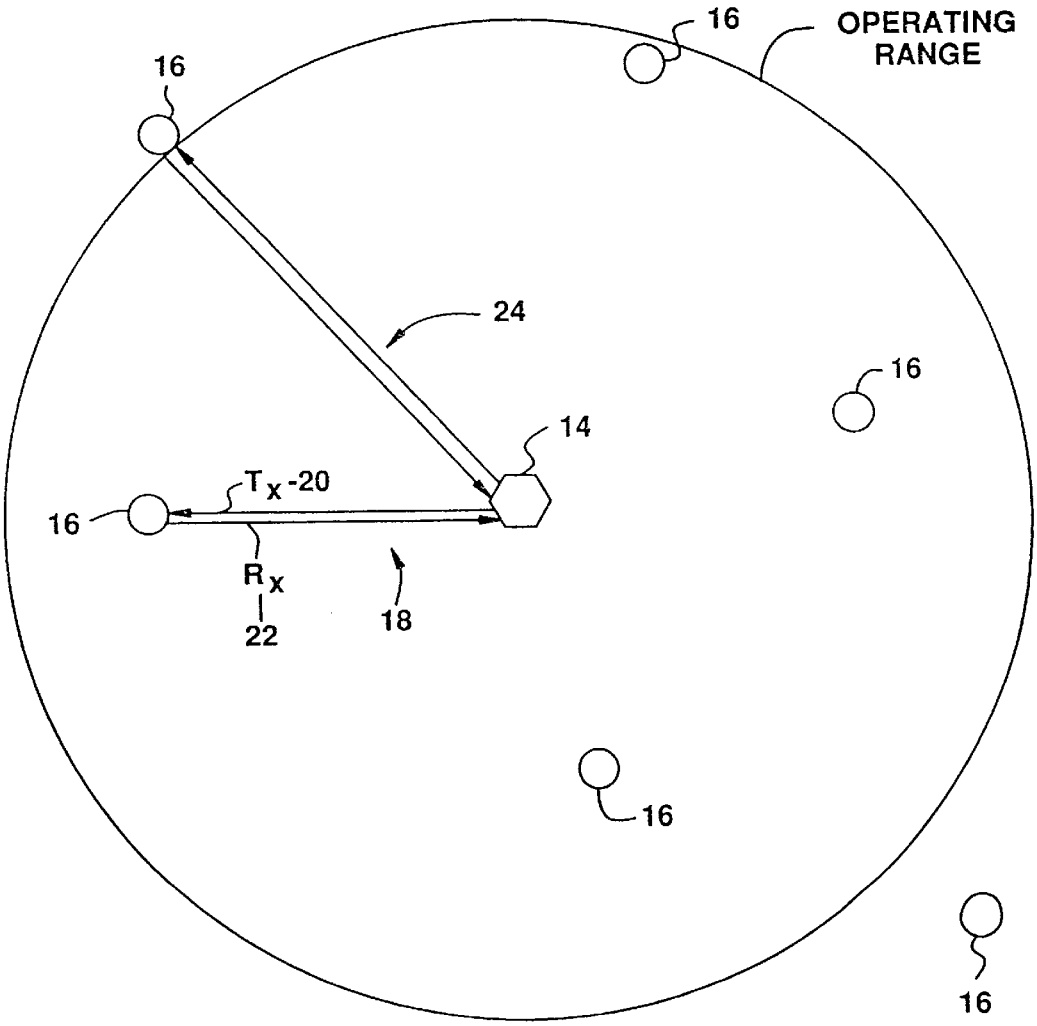

FIG.3

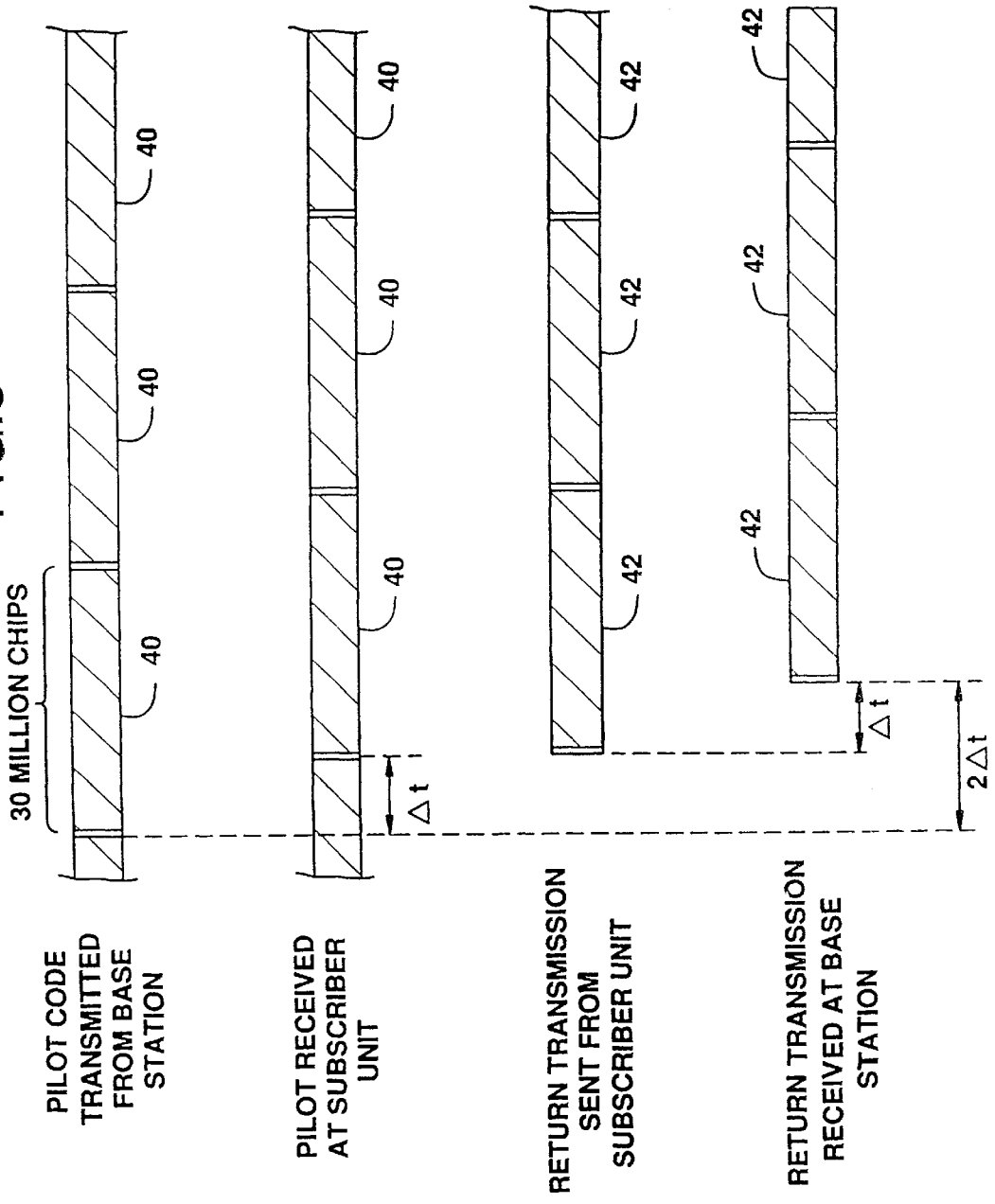
30 MILLION CHIPS
40
40
40
40
40
40
42
42
42
42
42
42
Δt
2Δt
PILOT CODE TRANSMITTED FROM BASE STATION
PILOT RECEIVED AT SUBSCRIBER UNIT
RETURN TRANSMISSION SENT FROM SUBSCRIBER UNIT
RETURN TRANSMISSION RECEIVED AT BASE STATION

FIG.4

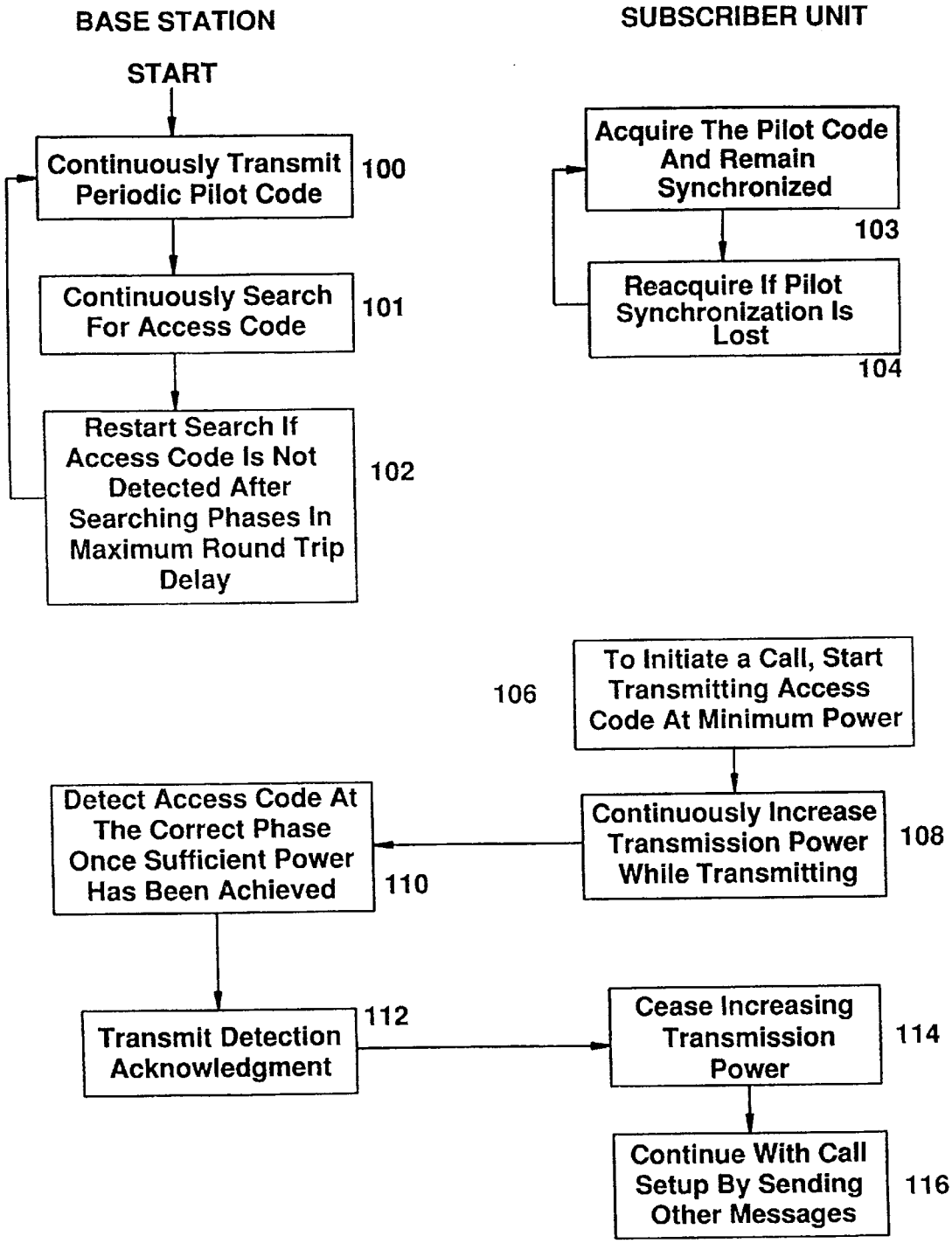
BASE STATION
SUBSCRIBER UNIT
START
Continuously Transmit Periodic Pilot Code
100
Continuously Search For Access Code
101
Restart Search If Access Code Is Not Detected After Searching Phases In Maximum Round Trip Delay
102
Acquire The Pilot Code And Remain Synchronized
103
Reacquire If Pilot Synchronization Is Lost
104
106
To Initiate a Call, Start Transmitting Access Code At Minimum Power
Continuously Increase Transmission Power While Transmitting
108
Detect Access Code At The Correct Phase Once Sufficient Power Has Been Achieved
110
Transmit Detection Acknowledgment
112
Cease Increasing Transmission Power
114
Continue With Call Setup By Sending Other Messages
116

FIG.5

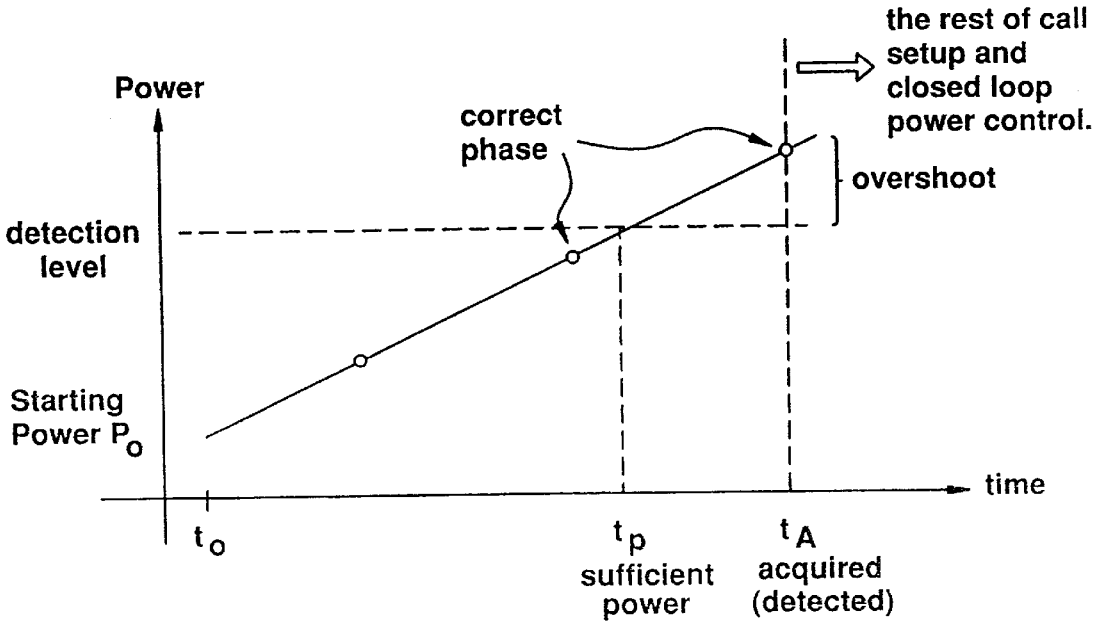
Power
correct phase
the rest of call setup and closed loop power control.
overshoot
detection level
Starting Power P_o
time
t_o
t_p sufficient power
t_A acquired (detected)

FIG.7

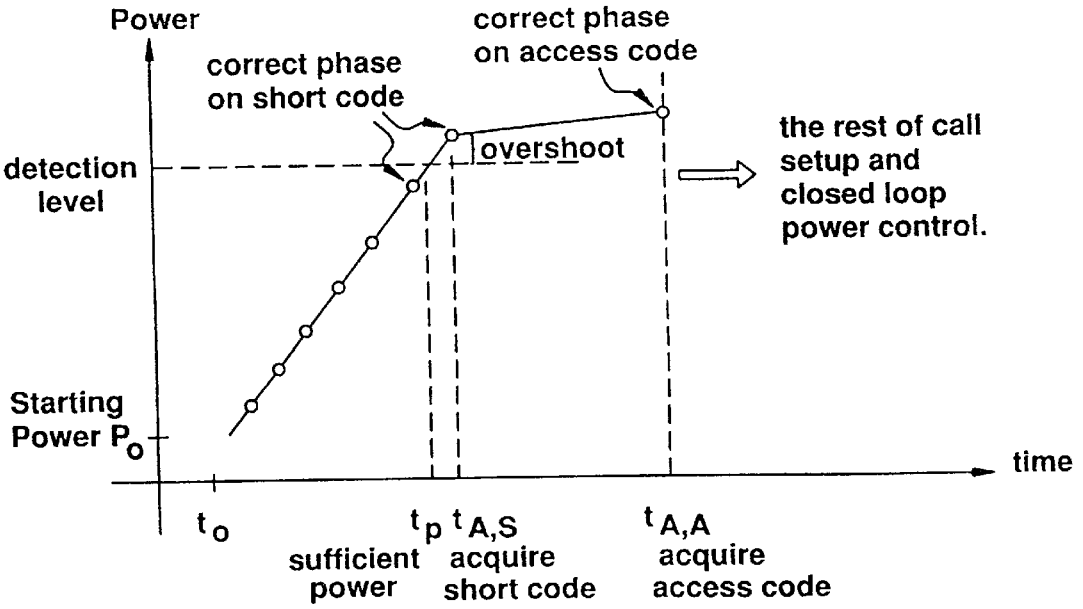
Power
correct phase on short code
correct phase on access code
overshoot
the rest of call setup and closed loop power control.
detection level
Starting Power P_o
time
t_o
t_p sufficient power
$t_{A,S}$ acquire short code
$t_{A,A}$ acquire access code

FIG.6A

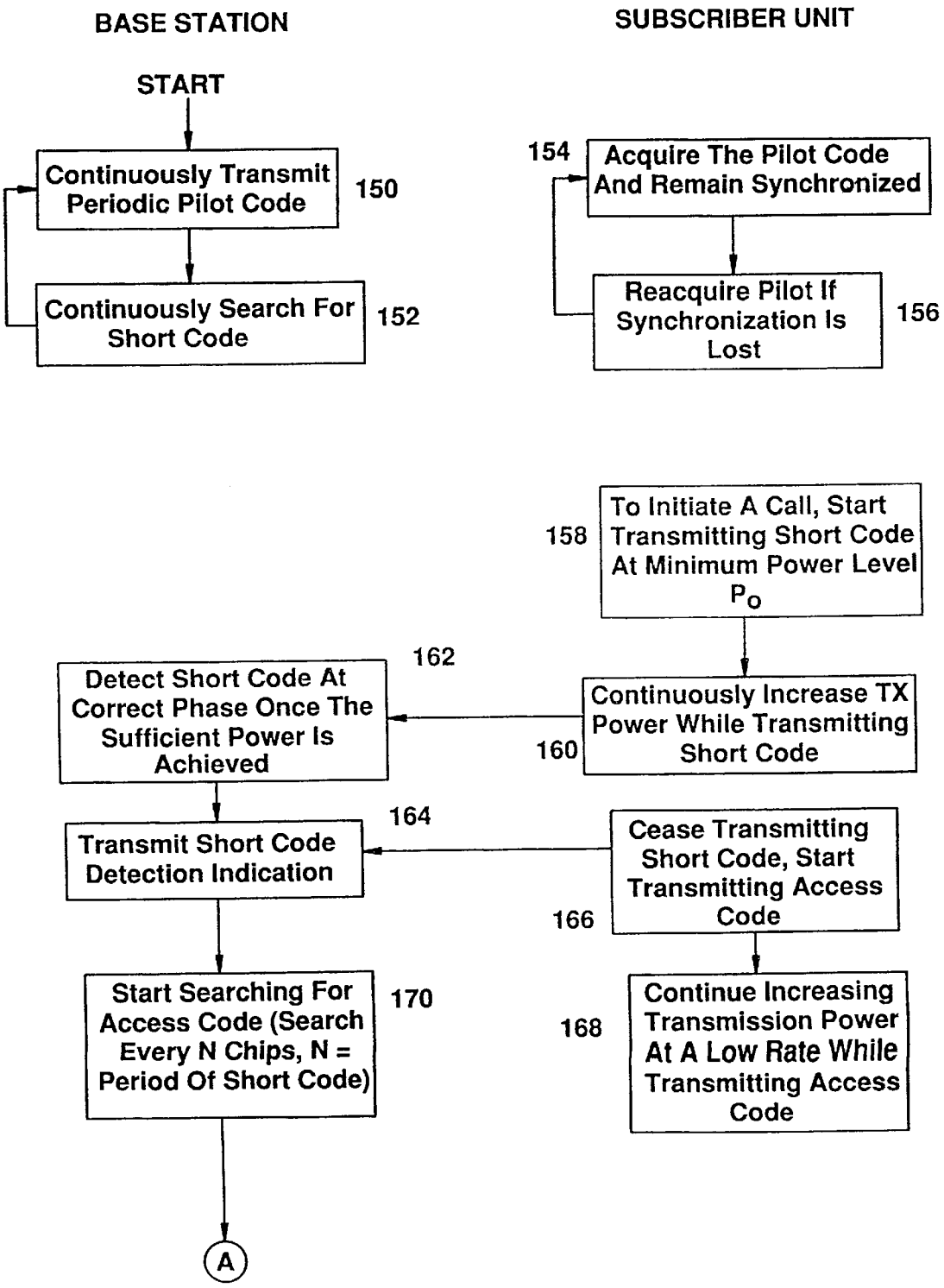
BASE STATION
SUBSCRIBER UNIT
START
Continuously Transmit Periodic Pilot Code
150
Continuously Search For Short Code
152
154
Acquire The Pilot Code And Remain Synchronized
Reacquire Pilot If Synchronization Is Lost
156
158
To Initiate A Call, Start Transmitting Short Code At Minimum Power Level P_o
Continuously Increase TX Power While Transmitting Short Code
160
162
Detect Short Code At Correct Phase Once The Sufficient Power Is Achieved
Transmit Short Code Detection Indication
164
Cease Transmitting Short Code, Start Transmitting Access Code
166
Start Searching For Access Code (Search Every N Chips, N = Period Of Short Code)
170
Continue Increasing Transmission Power At A Low Rate While Transmitting Access Code
168
A

FIG.6B

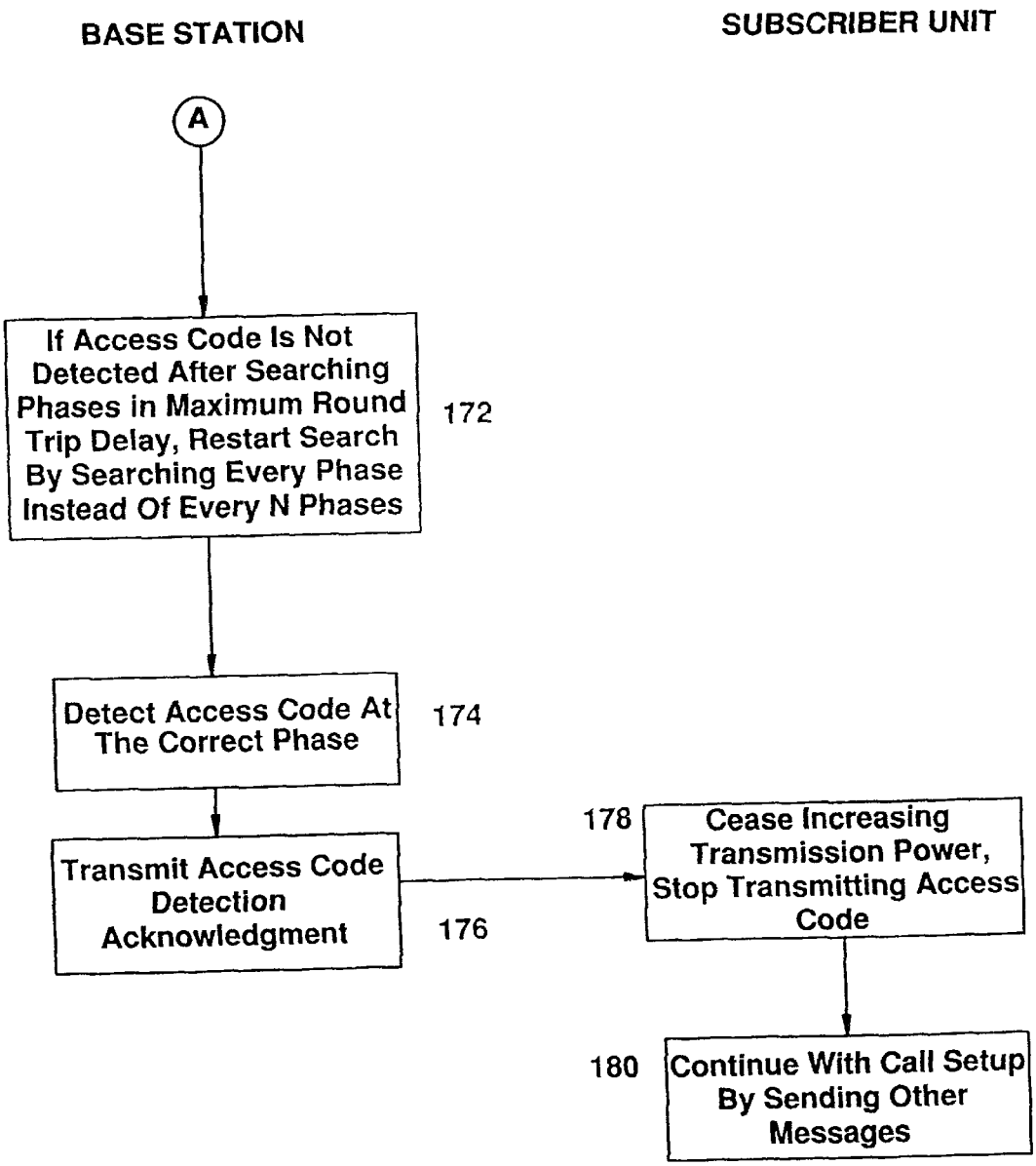
BASE STATION
SUBSCRIBER UNIT
A
If Access Code Is Not Detected After Searching Phases in Maximum Round Trip Delay, Restart Search By Searching Every Phase Instead Of Every N Phases
172
Detect Access Code At The Correct Phase
174
Transmit Access Code Detection Acknowledgment
176
178
Cease Increasing Transmission Power, Stop Transmitting Access Code
180
Continue With Call Setup By Sending Other Messages

FIG.8

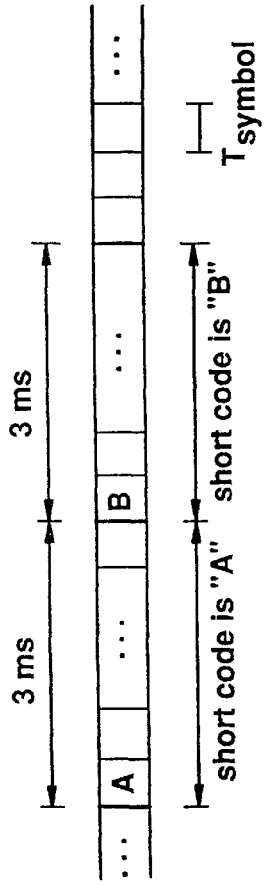
3 ms
3 ms
A
B
T symbol
short code is "A"
short code is "B"

FIG.9

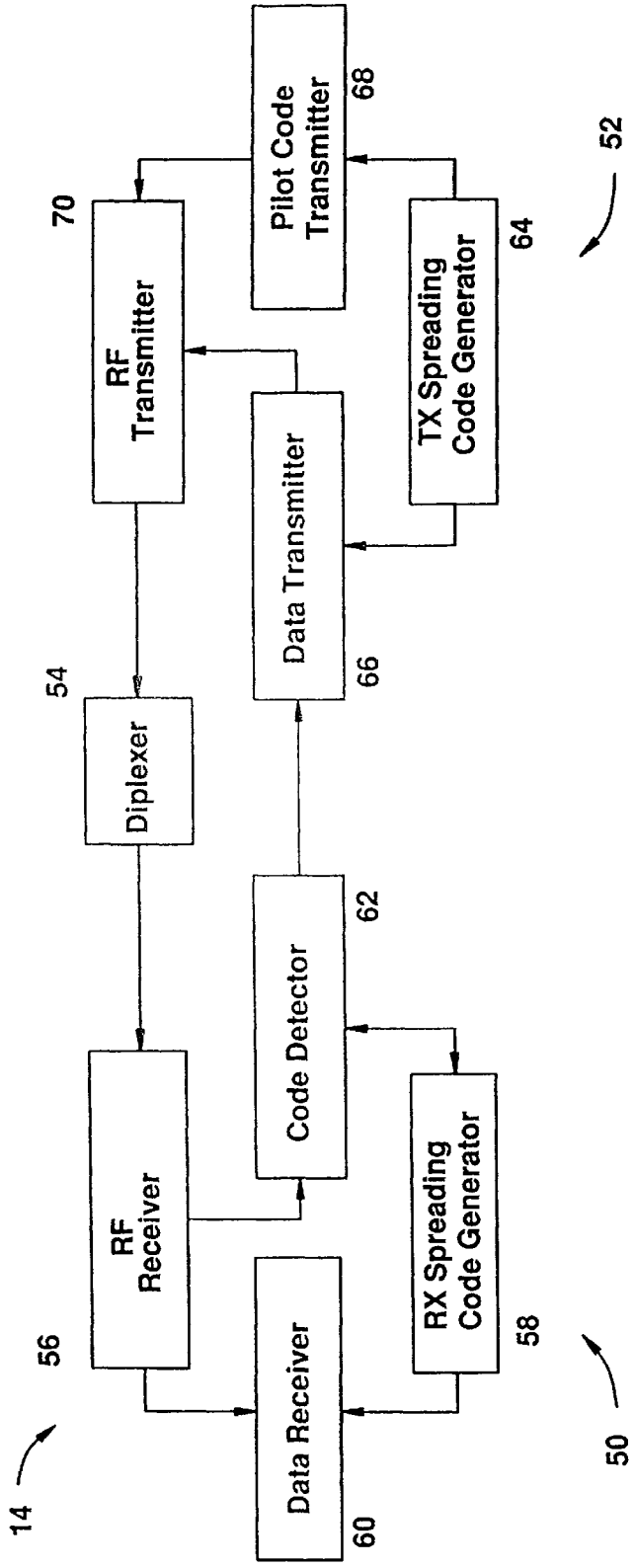
Pilot Code Transmitter
68
70
RF Transmitter
TX Spreading Code Generator
64
52
Data Transmitter
66
54
Diplexer
62
Code Detector
RF Receiver
56
RX Spreading Code Generator
58
Data Receiver
60
14
50

FIG.10

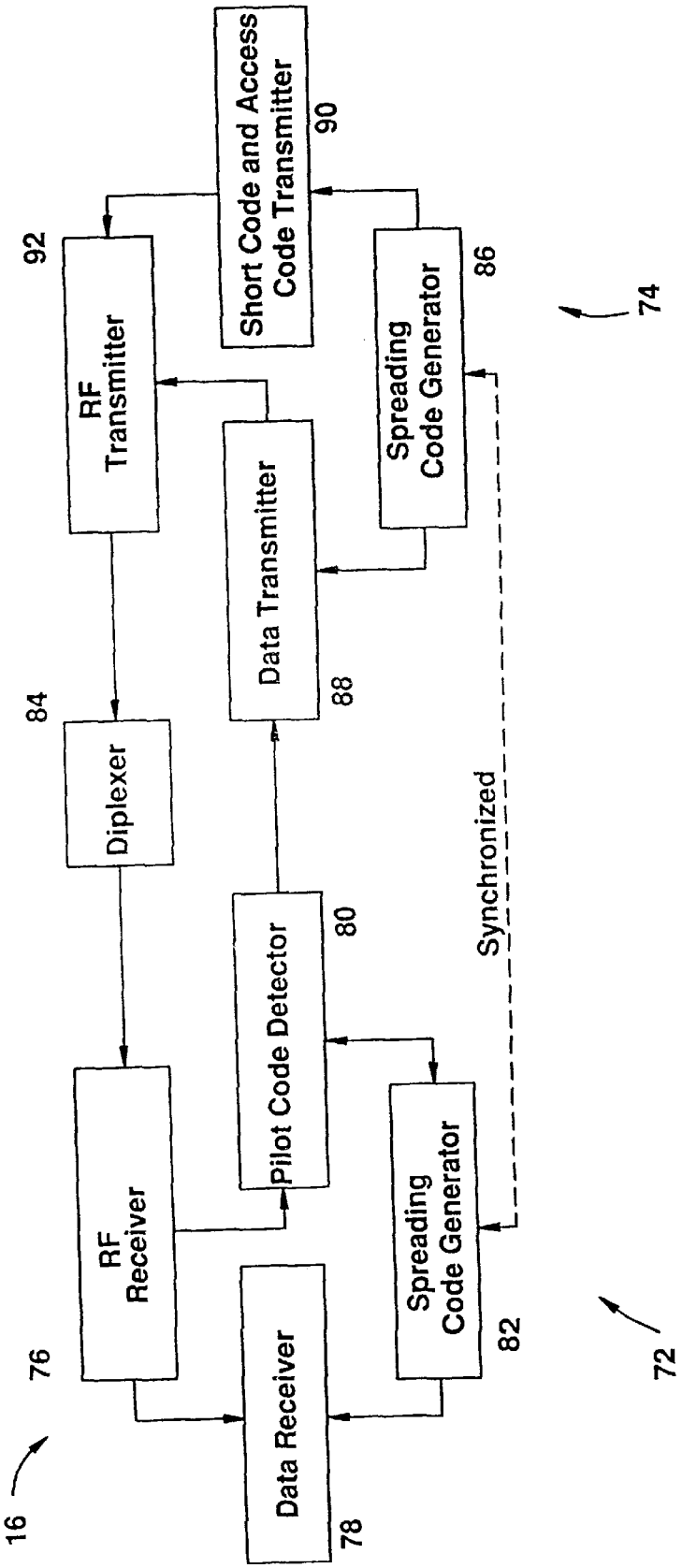
Short Code and Access Code Transmitter
90
92
RF Transmitter
Spreading Code Generator
86
74
Data Transmitter
88
84
Diplexer
Synchronized
Pilot Code Detector
80
RF Receiver
Spreading Code Generator
82
76
72
Data Receiver
78
16

FIG.11A

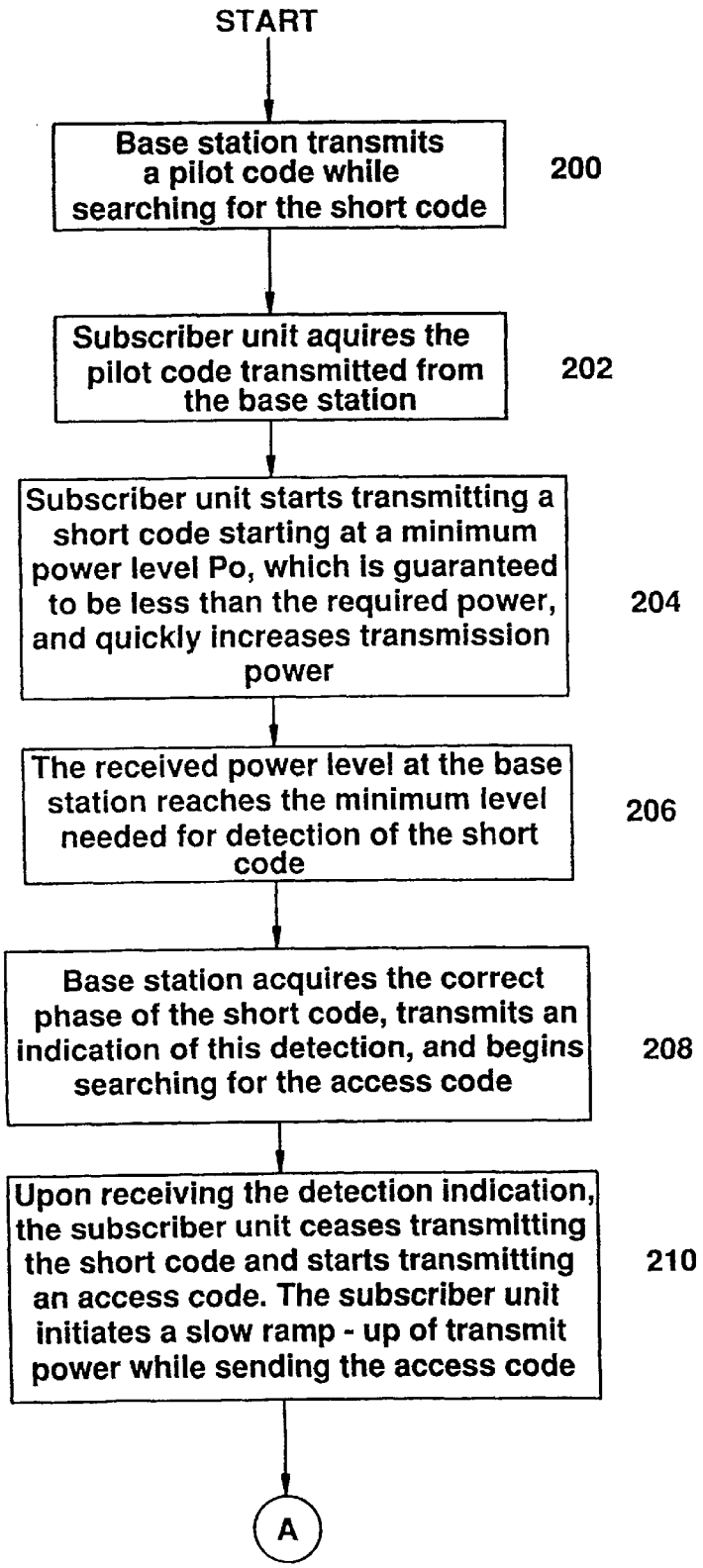
START
Base station transmits a pilot code while searching for the short code
200
Subscriber unit aquires the pilot code transmitted from the base station
202
Subscriber unit starts transmitting a short code starting at a minimum power level Po, which is guaranteed to be less than the required power, and quickly increases transmission power
204
The received power level at the base station reaches the minimum level needed for detection of the short code
206
Base station acquires the correct phase of the short code, transmits an indication of this detection, and begins searching for the access code
208
Upon receiving the detection indication, the subscriber unit ceases transmitting the short code and starts transmitting an access code. The subscriber unit initiates a slow ramp - up of transmit power while sending the access code
210
A

FIG.11B

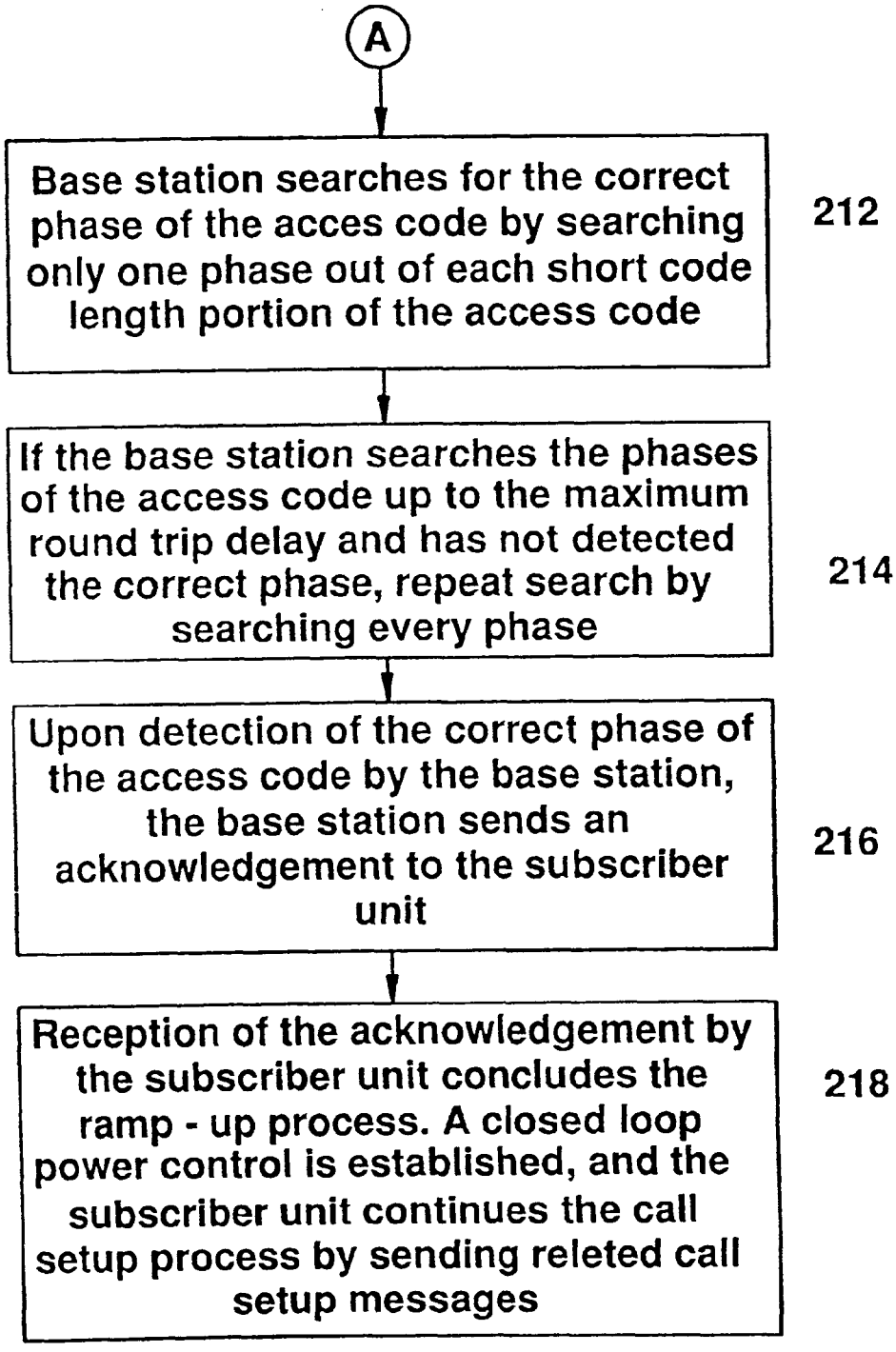
A
Base station searches for the correct phase of the acces code by searching only one phase out of each short code length portion of the access code
212
If the base station searches the phases of the access code up to the maximum round trip delay and has not detected the correct phase, repeat search by searching every phase
214
Upon detection of the correct phase of the access code by the base station, the base station sends an acknowledgement to the subscriber unit
216
Reception of the acknowledgement by the subscriber unit concludes the ramp - up process. A closed loop power control is established, and the subscriber unit continues the call setup process by sending releted call setup messages
218

METHOD OF CONTROLLING INITIAL POWER RAMP-UP IN CDMA SYSTEMS BY USING SHORT CODES

CROSS REFERENCE TO RELATED APPLICATION

This application is being filed concurrently with an application entitled Code Division Multiple Access (CDMA) System and Method which is herein incorporated by reference as if fully set forth.

BACKGROUND OF THE INVENTION

1. Field of the Invention

The present invention relates generally to CDMA communication systems. More specifically, the present invention relates to a CDMA communication system which utilizes the transmission of short codes from subscriber units to a base station to reduce the time required for the base station to detect the signal from a subscriber unit. The improved detection time allows a faster ramp-up of the initial transmit power from the subscriber units while reducing the unnecessary power overshoot.

2. Description of Related Art

The use of wireless telecommunication systems has grown dramatically in the last decade as the reliability and capacity of the systems have improved. Wireless communication systems are being utilized in a variety of applications where land line based systems are impractical or impossible to use. Applications of wireless communications include cellular phone communications, communications in remote locations, and temporary communications for disaster recovery. Wireless communication systems have also become an economically viable alternative to replacing aging telephone lines and outdated telephone equipment.

The portion of the RF spectrum available for use by wireless communication systems is a critical resource. The RF spectrum must be shared among all commercial, governmental and military applications. There is a constant desire to improve the efficiency of wireless communication systems in order to increase system capacity.

Code division multiple access (CDMA) wireless communication systems have shown particular promise in this area. Although more traditional time division multiple access (TDMA) and frequency division multiple access (FDMA) systems have improved using the latest technological advances, CDMA systems, in particular Broadband Code Division Multiple Access™ (B-CDMA™) systems, have significant advantages over TDMA and FDMA systems. This efficiency is due to the improved coding and modulation density, interference rejection and multipath tolerance of B-CDMA™ systems, as well as reuse of the same spectrum in every communication cell. The format of CDMA communication signals also makes it extremely difficult to intercept calls, thereby ensuring greater privacy for callers and providing greater immunity against fraud.

In a CDMA system, the same portion of the frequency spectrum is used for communication by all subscriber units. Each subscriber unit's baseband data signal is multiplied by a code sequence, called the "spreading code" which has a much higher rate than the data. The ratio of the spreading code rate to the data symbol rate is called the "spreading factor" or the "processing gain". This coding results in a much wider transmission spectrum than the spectrum of the baseband data signal, hence the technique is called "spread spectrum". Subscriber units and their communications can

be discriminated by assigning a unique spreading code to each communication link which is called a CDMA channel. Since all communications are sent over the same frequency band, each CDMA communication overlaps communications from other subscriber units and noise-related signals in both frequency and time.

The use of the same frequency spectrum by a plurality of subscriber units increases the efficiency of the system. However, it also causes a gradual degradation of the performance of the system as the number of users increase. Each subscriber unit detects communication signals with its unique spreading code as valid signals and all other signals are viewed as noise. The stronger the signal from a subscriber unit arrives at the base station, the more interference the base station experiences when receiving and demodulating signals from other subscriber units. Ultimately, the power from one subscriber unit may be great enough to terminate communications of other subscriber units. Accordingly, it is extremely important in wireless CDMA communication systems to control the transmission power of all subscriber units. This is best accomplished by using a closed loop power control algorithm once a communication link is established. A detailed explanation of such a closed loop algorithm is disclosed in U.S. Patent Application entitled Code Division Multiple Access (CDMA) System and Method filed concurrently herewith, which is incorporated by reference as if fully set forth.

The control of transmission power is particularly critical when a subscriber unit is attempting to initiate communications with a base station and a power control loop has not yet been established. Typically, the transmission power required from a subscriber unit changes continuously as a function of the propagation loss, interference from other subscribers, channel noise, fading and other channel characteristics. Therefore, a subscriber unit does not know the power level at which it should start transmitting. If the subscriber unit begins transmitting at a power level that is too high, it may interfere with the communications of other subscriber units and may even terminate the communications of other subscriber units. If the initial transmission power level is too low, the subscriber unit will not be detected by the base station and a communication link will not be established.

There are many methods for controlling transmission power in a CDMA communication system. For example, U.S. Pat. No. 5,056,109 (Gilhousen et al.) discloses a transmission power control system wherein the transmission power of the subscriber unit is based upon periodic signal measurements from both the subscriber unit and the base station. The base station transmits a pilot signal to all subscriber units which analyze the received pilot signal, estimate the power loss in the transmitted signal and adjust their transmission power accordingly. Each subscriber unit includes a non-linear loss output filter which prevents sudden increases in power which would cause interference to other subscriber units. This method is too complex to permit a base station to quickly acquire a subscriber unit while limiting the interference to other subscriber units. In addition, the propagation losses, interference and noise levels experienced in a forward link (transmission from the base station to a subscriber unit) is often not the same as in a reverse link (transmission from a subscriber unit to the base station). Reverse link power estimates based on forward link losses are not precise.

Many other types of prior art transmission power control systems require complex control signaling between communicating units or preselected transmission values to control transmission power. These power control techniques are inflexible and often impractical to implement.

Accordingly, there is a need for an efficient method of controlling the initial ramp-up of transmission power by subscriber units in a wireless CDMA communication system.

SUMMARY OF THE INVENTION

The present invention comprises a novel method of controlling transmission power during the establishment of a channel in a CDMA communication system by utilizing the transmission of a short code from a subscriber unit to a base station during initial power ramp-up. The short code is a sequence for detection by the base station which has a much shorter period than a conventional spreading code. The ramp-up starts from a power level that is guaranteed. to be lower than the required power level for detection by the base station. The subscriber unit quickly increases transmission power while repeatedly transmitting the short code until the signal is detected by the base station. Once the base station detects the short code, it sends an indication to. the subscriber unit to cease increasing transmission power. The use of short codes limits power overshoot and interference to other subscriber stations and permits the base station to quickly synchronize to the spreading code used by the subscriber unit.

Accordingly, it is an object of the present invention to provide an improved technique for controlling power ramp-up during establishment of a communication channel between a CDMA subscriber unit and base station.

Other objects and advantages of the present invention will become apparent after reading the description of a presently preferred embodiment.

BRIEF DESCRIPTION OF THE DRAWINGS

FIG. **1** is a schematic overview of a code division multiple access communication system in accordance with the present invention;

FIG. **2** is a diagram showing the operating range of a base station;

FIG. **3** is a timing diagram of communication signals between a base station and a subscriber unit;

FIG. **4** is a flow diagram of the establishment of a communication channel between a base station and a subscriber unit;

FIG. **5** is a graph of the transmission power output from a subscriber unit;

FIGS. **6**A and **6**B are flow diagrams of the establishment of a communication channel between a base station and a subscriber unit in accordance with the preferred embodiment of the present invention using short codes;

FIG. **7** is a graph of the transmission power output from a subscriber unit using short codes;

FIG. **8** shows the adaptive selection of short codes;

FIG. **9** is a block diagram of a base station in accordance with the present invention;

FIG. **10** is a block diagram of the subscriber unit in accordance with the present invention; and

FIGS. **11**A and **11**B are flow diagrams of the ramp-up procedure implemented in accordance with the present invention.

DETAILED DESCRIPTION OF THE PREFERRED EMBODIMENT

The preferred embodiment will be described with reference to the drawing figures where identical numerals represent similar elements throughout.

A communication network **10** embodying the present invention is shown in FIG. **1**. The communication network **10** generally comprises one or more base stations **14**, each of which is in wireless communication with a plurality of subscriber units **16**, which may be fixed or mobile. Each subscriber unit **16** communicates with either the closest base station **14** or the base station **14** which provides the strongest communication signal. The base stations **14** also communicate with a base station controller **20**, which coordinates communications among base stations **14**. The communication network **10** may also be connected to a public switched telephone network (PSTN) **22**, wherein the base station controller **20** also coordinates communications between the base stations **14** and the PSTN **22**. Preferably, each base station **14** communicates with the base station controller **20** over a wireless link, although a land line may also be provided. A land line is particularly applicable when a base station **14** is in close proximity to the base station controller **20**.

The base station controller **20** performs several functions. Primarily, the base station controller **20** provides all of the operations, administrative and maintenance (OA&M) signaling associated with establishing and maintaining all of the wireless communications between the subscriber units **16**, the base stations **14**, and the base station controller **20**. The base station controller **20** also provides an interface between the wireless communication system **10** and the PSTN **22**. This interface includes multiplexing and demultiplexing of the communication signals that enter and leave the system **10** via the base station controller **20**. Although the wireless communication system **10** is shown employing antennas to transmit RF signals, one skilled in the art should recognize that communications may be accomplished via microwave or satellite uplinks. Additionally, the functions of the base station controller **20** may be combined with a base station **14** to form a "master base station".

Referring to FIG. **2**, the propagation of signals between a base station **14** and a plurality of subscriber units **16** is shown. A two-way communication channel (link) **18** comprises a signal transmitted **20** (Tx) from the base station **14** to the subscriber unit **16** and a signal received **22** (Rx) by the base station **14** from the subscriber unit **16**. The Tx signal **20** is transmitted from the base station **14** and is received by the subscriber unit **16** after a propagation delay Δt. Similarly, the Rx signal originates at the subscriber unit **16** and terminates at the base station **14** after a further propagation delay Δt. Accordingly, the round trip propagation delay is $2\Delta t$. In the preferred embodiment, the base station **14** has an operating range of approximately 30 kilometers. The round trip propagation delay **24** associated with a subscriber unit **16** at the maximum operating range is 200 microseconds.

It should be apparent to those of skill in the art that the establishment of a communication channel between a base station and a subscriber unit is a complex procedure involving many tasks performed by the base station and the subscriber unit which are outside the scope of the present invention. The present invention is directed to initial power ramp-up and synchronization during the establishment of a communication channel.

Referring to FIG. **3**, the signaling between a base station **14** and a subscriber unit **16** is shown. In accordance with the present invention, the base station **14** continuously transmits a pilot code **40** to all of the subscriber units **16** located within the transmitting range of the base station **14**. The pilot code **40** is a spreading code which carries no data bits. The pilot code **40** is used for subscriber unit **16** acquisition and synchronization, as well as for determining the parameters of the adaptive matched filter used in the receiver.

The subscriber unit **16** must acquire the pilot code **40** transmitted by the base station **14** before it can receive or transmit any data. Acquisition is the process whereby the subscriber unit **16** aligns its locally generated spreading code with the received pilot code **40**. The subscriber unit **16** searches through all of the possible phases of the received pilot code **40** until it detects the correct phase, (the beginning of the pilot code **40**).

The subscriber unit **16** then synchronizes its transmit spreading code to the received pilot code **40** by aligning the beginning of its transmit spreading code to the beginning of the pilot code **40**. One implication of this receive and transmit synchronization is that the subscriber unit **16** introduces no additional delay as far as the phase of the spreading codes are concerned. Accordingly, as shown in FIG. **3**, the relative delay between the pilot code **40** transmitted from the base station **14** and the subscriber unit's transmit spreading code **42** received at the base station **14** is $2\Delta t$, which is solely due to the round trip propagation delay.

In the preferred embodiment, the pilot code is 29,877,120 chips in length and takes approximately 2 to 5 seconds to transmit, depending on the spreading factor. The length of the pilot code **40** was chosen to be a multiple of the data symbol no matter what kind of data rate or bandwidth is used. As is well known by those of skill in the art, a longer pilot code **40** has better randomness properties and the frequency response of the pilot code **40** is more uniform. Additionally, a longer pilot code **40** provides low channel cross correlation, thus increasing the capacity of the system **10** to support more subscriber units **16** with less interference. The use of a long pilot code **40** also supports a greater number of random short codes. For synchronization purposes, the pilot code **40** is chosen to have the same period as all of the other spreading codes used by the system **10**. Thus, once a subscriber unit **16** acquires the pilot code **40**, it is synchronized to all other signals transmitted from the base station **14**.

During idle periods, when a call is not in progress or pending, the subscriber unit **16** remains synchronized to the base station **14** by periodically reacquiring the pilot code **40**. This is necessary for the subscriber unit **16** to receive and demodulate any downlink transmissions, in particular paging messages which indicate incoming calls.

When a communication link is desired, the base station **14** must acquire the signal transmitted from the subscriber unit **16** before it can demodulate the data. The subscriber unit **16** must transmit an uplink signal for acquisition by the base station **14** to begin establishing the two-way communication link. A critical parameter in this procedure is the transmission power level of the subscriber unit **16**. A transmission power level that is too high can impair communications in the whole service area, whereas a transmission power level that is too low can prevent the base station **14** from detecting the uplink signal.

In a first embodiment of the present invention the subscriber unit **16** starts transmitting at a power level guaranteed to be lower than what is required and increases transmission power output until the correct power level is achieved. This avoids sudden introduction of a strong interference, hence improving system **10** capacity.

The establishment of a communication channel in accordance with the present invention and the tasks performed by the base station **14** and a subscriber unit **16** are shown in FIG. **4**. Although many subscriber units **16** may be located within the operating range of the base station **14**, reference will be made hereinafter to a single subscriber unit **16** for simplicity in explaining the operation of the present invention.

The base station **14** begins by continuously transmitting a periodic pilot code **40** to all subscriber units **16** located within the operating range of the base station **14** (step **100**). As the base station **14** transmits the pilot code **40** (step **100**), the base station **14** searches (step **101**) for an "access code" **42** transmitted by a subscriber unit **16**. The access code **42** is a known spreading code transmitted from a subscriber unit **16** to the base station **14** during initiation of communications and power ramp-up. The base station **14** must search through all possible phases (time shifts) of the access code **42** transmitted from the subscriber unit **16** in order to find the correct phase. This is called the "acquisition" or the "detection" process (step **101**). The longer the access code **42**, the longer it takes for the base station **14** to search through the phases and acquire the correct phase.

As previously explained, the relative delay between signals transmitted from the base station **14** and return signals received at the base station **14** corresponds to the round trip propagation delay $2\Delta t$. The maximum delay occurs at the maximum operating range of the base station **14**, known as the cell boundary. Accordingly, the base station **14** must search up to as many code phases as there are in the maximum round trip propagation delay, which is typically less code phases than there are in a code period.

For a data rate Rb and spreading code rate Rc, the ratio L=Rc/Rb is called the spreading factor or the processing gain. In the preferred embodiment of the present invention, the cell boundary radius is 30 km, which corresponds to approximately between 1000 and 2500 code phases in the maximum round trip delay, depending on the processing gain.

If the base station **14** has not detected the access code after searching through the code phases corresponding to the maximum round trip delay the search is repeated starting from the phase of the pilot code **40** which corresponds to zero delay (step **102**).

During idle periods, the pilot code **40** from the base station **14** is received at the subscriber unit **16** which periodically synchronizes its transmit spreading code generator thereto (step **103**). If synchronization with the pilot code **40** is lost, the subscriber unit **16** reacquires the pilot code **40** and resynchronizes (step **104**).

When it is desired to initiate a communication link, the subscriber unit **16** starts transmitting the access code **42** back to the base station **14** (step **106**). The subscriber unit **16** continuously increases the transmission power while retransmitting the access code **42** (step **108**) until it receives an acknowledgment from the base station **14**. The base station **14** detects the access code **42** at the correct phase once the minimum power level for reception has been achieved (step **110**). The base station **14** subsequently transmits an access code detection acknowledgment signal (step **112**) to the subscriber unit **16**. Upon receiving the acknowledgment, the subscriber unit ceases the transmission power increase (step **114**). With the power ramp-up completed, closed loop power control and call setup signaling is performed (step **116**) to establish the two-way communication link.

Although this embodiment limits subscriber unit **16** transmission power, acquisition of the subscriber unit **16** by the base station **14** in this manner may lead to unnecessary power overshoot from the subscriber unit **16**, thereby reducing the performance of the system **10**.

The transmission power output profile of the subscriber unit **16** is shown in FIG. **5**. At t_0, the subscriber unit **16** starts transmitting at the starting transmission power level P_0,

which is a power level guaranteed to be less than the power level required for detection by the base station **14**. The subscriber unit **16** continually increases the transmission power level until it receives the detection indication from the base station **14**. For the base station **14** to properly detect the access code **42** from the subscriber unit **16** the access code **42** must: 1) be received at a sufficient power level; and 2) be detected at the proper phase. Accordingly, referring to FIG. **5**, although the access code **42** is at a sufficient power level for detection by the base station **14** at t_p, the base station **14** must continue searching for the correct phase of the access code **42** which occurs at t_A.

Since the subscriber unit **16** continues to increase the output transmission power level until it receives the detection indication from the base station **14**, the transmission power of the access code **42** exceeds the power level required for detection by the base station **14**. This causes unnecessary interference to all other subscriber units **16**. If the power overshoot is too large, the interference to other subscriber units **16** may be so severe as to terminate ongoing communications of other subscriber units **16**.

The rate that the subscriber unit **16** increases transmission power to avoid overshoot may be reduced, however, this results in a longer call setup time. Those of skill in the art would appreciate that adaptive ramp-up rates can also be used, yet these rates have shortcomings and will not appreciably eliminate power overshoot in all situations.

The preferred embodiment of the present invention utilizes "short codes" and a two-stage communication link establishment procedure to achieve fast power ramp-up without large power overshoots. The spreading code transmitted by the subscriber unit **16** is much shorter than the rest of the spreading codes (hence the term short code), so that the number of phases is limited and the base station **14** can quickly search through the code. The short code used for this purpose carries no data.

The tasks performed by the base station **14** and the subscriber unit **16** to establish a communication channel using short codes in accordance with the preferred embodiment of the present invention are shown in FIGS. **6**A and **6**B. During idle periods, the base station **14** periodically and continuously transmits the pilot code to all subscriber units **16** located within the operating range of the base station **14** (step **150**). The base station **14** also continuously searches for a short code transmitted by the subscriber unit **16** (step **152**). The subscriber unit **16** acquires the pilot code and synchronizes its transmit spreading code generator to the pilot code. The subscriber unit **16** also periodically checks to ensure it is synchronized. If synchronization is lost, the subscriber unit **16** reacquires the pilot signal transmitted by the base station (step **156**).

When a communication link is desired, the subscriber unit **16** starts transmitting a short code at the minimum power level p_0 (step **158**) and continuously increases the transmission power level while retransmitting the short code (step **160**) until it receives an acknowledgment from the base station **14** that the short code has been detected by the base station **14**.

The access code in the preferred embodiment, as previously described herein, is approximately 30 million chips in length. However, the short code is much smaller. The short code can be chosen to be any length that is sufficiently short to permit quick detection. There is an advantage in choosing a short code length such that it divides the access code period evenly. For the access code code described herein, the short code is preferably chosen to be 32, 64 or 128 chips in length. Alternatively, the short code may be as short as one symbol length, as will be described in detail hereinafter.

Since the start of the short code and the start of the access code are synchronized, once the base station **14** acquires the short code, the base station **14** knows that the corresponding phase of the access code is an integer multiple of N chips from the phase of the short code where N is the length of the short code. Accordingly, the base station **14** does not have to search all possible phases corresponding to the maximum round trip propagation delay.

Using the short code, the correct phase for detection by the base station **14** occurs much more frequently. When the minimum power level for reception has been achieved, the short code is quickly detected (step **162**) and the transmission power overshoot is limited. The transmission power ramp-up rate may be significantly increased without concern for a large power overshoot. In the preferred embodiment of the present invention, the power ramp-up rate using the short code is 1 dB per millisecond.

The base station **14** subsequently transmits a short code detection indication signal (step **164**) to the Subscriber unit **16** which enters the second stage of the power ramp-up upon receiving this indication. In this stage, the subscriber unit **16** ceases transmitting the short code (step **166**) and starts continuously transmitting a periodic access code (step **166**). The subscriber unit **16** continues to ramp-up its transmission power while transmitting the access code, however the ramp-up rate is now much lower than the previous ramp-up rate used with the short code (step **168**). The ramp-up rate with the access code is preferably 0.05 dB per millisecond. The slow ramp-up avoids losing synchronization with the base station **14** due to small changes in channel propagation characteristics.

At this point, the base station **14** has detected the short code at the proper phase and power level (step **162**). The base station **14** must now synchronize to the access code which is the same length as all other spreading codes and much longer than the short code. Utilizing the short code, the base station **14** is able to detect the proper phase of the access code much more quickly. The base station **14** begins searching for the proper phase of the access code (step **170**). However, since the start of the access code is synchronized with the start of the short code, the base station **14** is only required to search every N chips; where N=the length of the short code. In summary, the base station **14** quickly acquires the access code of the proper phase and power level by: 1) detecting the short code; and 2) determining the proper phase of the access code by searching every N chips of the access code from the beginning of the short code.

If the proper phase of the access code has not been detected after searching the number of phases in the maximum round trip delay the base station **14** restarts the search for the access code by searching every chip instead of every N chips (step **172**). When the proper phase of the access code has been detected (step **174**) the base station **14** transmits an access code detection acknowledgment (step **176**) to the subscriber unit **16** which ceases the transmission power increase (step **178**) upon receiving this acknowledgment. With the power ramp-up completed, closed loop power control and call setup signaling is performed (step **180**) to establish the two-way communication link.

Referring to FIG. **7**, although the starting power level P_0 is the same as in the prior embodiment, the subscriber unit **16** may ramp-up the transmission power level at a much higher rate by using a short code. The short code is quickly detected after the transmission power level surpasses the

minimum detection level, thus minimizing the amount of transmission power overshoot.

Although the same short code may be reused by the subscriber unit **16**, in the preferred embodiment of the present invention the short codes are dynamically selected and updated in accordance with the following procedure. Referring to FIG. **8**, the period of the short code is equal to one symbol length and the start of each period is aligned with a symbol boundary. The short codes are generated from a regular length spreading code. A symbol length portion from the beginning of the spreading code is stored and used as the short code for the next 3 milliseconds. Every 3 milliseconds, a new symbol length portion of the spreading code replaces the old short code. Since the spreading code period is an integer multiple of 3 milliseconds, the same short codes are repeated once every period of the spreading code.

Periodic updating of the short code averages the interference created by the short code over the entire spectrum. A detailed description of the selection and updating of the short codes is outside the scope of this invention. However, such a detailed description is disclosed in the related application U.S. Patent Appln. entitled Code Division Multiple Access (CDMA) System and Method.

A block diagram of the base station **14** is shown in FIG. **9**. Briefly described, the base station **14** comprises a receiver section **50**, a transmitter section **52** and a diplexer **54**. An RF receiver **56** receives and down-converts the RF signal received from the diplexer **54**. The receive spreading code generator **58** outputs a spreading code to both the data receiver **60** and the code detector **62**. In the data receiver **60**, the spreading code is correlated with the baseband signal to extract the data signal which is forwarded for further processing. The received baseband signal is also forwarded to the code detector **62** which detects the access code or the short code from the subscriber unit **16** and adjusts the timing of the spreading code generator **58** to establish a communication channel **18**.

In the transmitter section **52** of the base station **14**, the transmit spreading code generator **64** outputs a spreading code to the data transmitter **66** and the pilot code transmitter **68**. The pilot code transmitter **68** continuously transmits the periodic pilot code. The data transmitter **66** transmits the short code detect indication and access code detect acknowledgment after the code detector **62** has detected the short code or the access code respectively. The data transmitter also sends other message and data signals. The signals from the data transmitter **66** and the pilot code transmitter **68** are combined and up-converted by the RF transmitter **70** for transmission to the subscriber units **16**.

A block diagram of the subscriber unit **16** is shown in FIG. **10**. Briefly described, the subscriber unit **16** comprises a receiver section **72**, a transmitter section **74** and a diplexer **84**. An RF receiver **76** receives and down-converts the RF signal received from the diplexer **84**. A pilot code detector **80** correlates the spreading code with the baseband signal to acquire the pilot code transmitted by the base station **16**. In this manner, the pilot code detector **80** maintains synchronization with the pilot code. The receiver spreading code generator **82** generates and outputs a spreading code to the data receiver **78** and the pilot code detector **80**. The data receiver **78** correlates the spreading code with the baseband signal to process the short code detect indication and the access code detect acknowledgment transmitted by the base station **16**.

The transmitter section **74** comprises a spreading code generator **86** which generates and outputs spreading codes to a data transmitter **88** and a short code and access code transmitter **90**. The short code and access code transmitter **90** transmits these codes at different stages of the power ramp-up procedure as hereinbefore described. The signals output by the data transmitter **88** and the short code and access code transmitter **90** are combined and up-converted by the RF transmitter **92** for transmission to the base station **14**. The timing of the receiver spreading code generator **82** is adjusted by the pilot code detector **80** through the acquisition process. The receiver and transmitter spreading code generators **82**, **86** are also synchronized.

An overview of the ramp-up procedure in accordance with the preferred current invention is summarized in FIGS. **11**A and **11**B. The base station **14** transmits a pilot code while searching for the short code (step **200**). The subscriber unit **16** acquires the pilot code transmitted from the base station **14** (step **202**), starts transmitting a short code starting at a minimum power level P_0 which is guaranteed to be less than the required power, and quickly increases transmission power (step **204**). Once the received power level at the base station **14** reaches the minimum level needed for detection of the short code (step **206**) the base station **14** acquires the correct phase of the short code, transmits an indication of this detection, and begins searching for the access code (step **208**). Upon receiving the detection indication, the subscriber unit **16** ceases transmitting the short code and starts transmitting an access code. The subscriber unit **16** initiates a slow ramp-up of transmit power while sending the access code (step **210**). The base station **14** searches for the correct phase of the access code by searching only one phase out of each short code length portion of the access code (step **212**). If the base station **14** searches the phases of the access code up to the maximum round trip delay and has not detected the correct phase, the search is repeated by searching every phase (step **214**). Upon detection of the correct phase of the access code by the base station **14**, the base station **14** sends an acknowledgment to the subscriber unit **16** (step **216**). Reception of the acknowledgment by the subscriber unit **16** concludes the ramp-up process. A closed loop power control is established, and the subscriber unit **16** continues the call setup process by sending related call setup messages (step **218**).

Although the invention has been described in part by making detailed reference to the preferred embodiment, such detail is intended to be instructive rather than restrictive. It will be appreciated by those skilled in the art that many variations may be made in the structure and mode of operation without departing from the spirit and scope of the invention as disclosed in the teachings herein.

What is claimed is:

1. A method for controlling transmission power during the establishment of communications between a base station and at least one subscriber unit, the method comprising:

transmitting a periodic signal from said subscriber unit at an initial predetermined power level;

increasing said power level at a predetermined ramp-up rate;

detecting said periodic signal at said base station when a sufficient power for detection is achieved;

transmitting a signal from said base station confirming that said periodic signal has been detected;

receiving said confirmation signal at said subscriber unit; and

ceasing the increase of the power level of the transmission of said periodic signal at said predetermined power level ramp-up rate when said confirmation signal is received.

2. The method of claim 1 wherein said initial predetermined power level is lower than the power level required for detection by said base station.

3. The method of claim 2 further including increasing the power level of said signal at a second predetermined rate, said second rate being less than said first rate.

4. The method of claim 3 wherein said first rate is approximately 1.0 dB/sec and said second rate is approximately 0.05 dB/sec.

5. A network for communicating between a base station and at least one subscriber unit, the network including a system for initial power control comprising:

said subscriber unit comprising:

means for selectively transmitting at least one access code at a selected transmission power level;

means for detecting a signal from said base station confirming the receipt of said access code; and

control means, responsive to said detecting means, for varying said transmission power level; wherein said control means ceases increasing said transmission power level at a first rate upon the receipt of said confirmation signal and increases said transmission power level at a second rate after the receipt of said confirmation signal, said second rate being less than said first rate; and said base station comprising:

means for detecting transmissions from at least one said subscriber unit, said transmissions including said access code; and

transmission means, responsive to said detecting means, for transmitting a confirmation signal to said subscriber unit when said access code is detected.

6. A communication network for conducting a plurality of concurrent communications using wireless transmissions between a primary station and at least one secondary station, the network including a power control system for controlling initial transmission power; the power control system comprising:

the primary station having:

(i) means for transmitting a synchronization code;

(ii) means for detecting access codes transmitted from said at least one secondary station; and

(iii) means for generating a confirmation signal, said generating means being responsive to said detecting means; and a first secondary station having:

(i) means for receiving the synchronization information from the primary station;

(ii) means for transmitting an access signal at a first transmission power level; and

(iii) means for increasing said transmission power level until said confirmation signal from said primary station is received whereupon the transmission of said synchronization code ceases.

7. A method for controlling transmission power ramp-up during establishment of communications between a base station and at least one subscriber unit, the method comprising:

transmitting from said subscriber unit a periodic signal at a predetermined power level, said power level being sufficiently low such that it will not be detected by said base station;

steadily increasing the power level of said signal at a predefined ramp-up rate;

detecting at said base station, the correct phase of said periodic signal when the signal achieves a sufficient power for detection by said base station;

transmitting, from said base station, a confirmation signal that said periodic signal has been detected;

receiving, at said subscriber unit, said confirmation signal, and;

ceasing the transmission of said periodic signal at the predetermined power level ramp-up rate at said subscriber unit when said confirmation signal is received.

8. The method of claim 7 further including increasing the power level of said signal at a second predefined ramp-up rate; said second ramp-up rate being less than said first ramp-up rate.

9. The method of claim 8 wherein said first ramp-up rate is approximately 1.0 dB/sec and said second ramp-up rate is approximately 0.05 dB/sec.

10. A communication system for communicating between a base station and at least one subscriber unit, said communication system including a system for initial power control, said power control system comprising:

said subscriber unit comprising:

means for periodically transmitting a short access code having a predetermined length to said base station; said short access code being transmitted at a first power level;

means for increasing said power level at a first power ramp-up rate;

means for detecting a transmission from said base station which confirms the receipt of said short access code at said base station; and

means, responsive to said detecting means, for ceasing increase of said power level at said first power ramp-up rate and periodically transmitting a long access code a second increasing power ramp-up rate; said long access code having a predetermined length which is an even multiple of said short access code said second ramp-up rate being less than said first power increase rate; and said base station comprising:

means for detecting transmissions from at least one said subscriber unit including said short and long access codes; and

transmission means, responsive to said detecting means, for transmitting a confirmation signal to said subscriber unit when said access codes are detected.

* * * * *

UNITED STATES PATENT AND TRADEMARK OFFICE

CERTIFICATE OF CORRECTION

PATENT NO. : 6,181,949 B1
DATED : January 30, 2001
INVENTOR(S) : Ozluturk et al.

It is certified that error appears in the above-identified patent and that said Letters Patent is hereby corrected as shown below:

Title page,
In the first column, next to section "(75) Inventors:" and next to the second named inventor, "Gary R. Lomp", delete "Cenerport" and insert therefor -- Centerport -- .

In the first column, below section "(22) Filed: January 6, 1998", insert therefor --

Item [63] -- Related U.S. Application Data - Continuation of Application No. 08/670,162, June 27, 1996, now U.S. Patent No. 5,841,768. --

Signed and Sealed this

Eleventh Day of September, 2001

Attest:

Nicholas P. Godici

Attesting Officer

NICHOLAS P. GODICI
Acting Director of the United States Patent and Trademark Office

EXHIBIT F

US006215778B1

(12) **United States Patent**
Lomp et al.

(10) **Patent No.: US 6,215,778 B1**
(45) **Date of Patent: Apr. 10, 2001**

(54) **BEARER CHANNEL MODIFICATION SYSTEM FOR A CODE DIVISION MULTIPLE ACCESS (CDMA) COMMUNICATION SYSTEM**

(75) Inventors: **Gary Lomp**, Centerpot; **John Kowalski**, Hempstead; **Fatih Ozluturk**, Port Washington; **Avi Silverberg**, Commack; **Robert Regis**, Huntington; **Michael Luddy**, Sea Cliff; **Alexander Marra**, New York; **Alexander Jacques**, Mineola, all of NY (US)

(73) Assignee: **InterDigital Technology Corporation**, Wilmington, DE (US)

(*) Notice: Subject to any disclaimer, the term of this patent is extended or adjusted under 35 U.S.C. 154(b) by 0 days.

(21) Appl. No.: **08/956,740**

(22) Filed: **Oct. 23, 1997**

Related U.S. Application Data

(62) Division of application No. 08/669,775, filed on Jun. 27, 1996, now Pat. No. 5,799,010.
(60) Provisional application No. 60/000,775, filed on Jun. 30, 1995.

(51) **Int. Cl.**[7] **H04B 7/216**
(52) **U.S. Cl.** **370/335**; 370/465
(58) **Field of Search** 370/310, 318, 370/320, 328, 329, 335, 342, 465, 468, 477, 441, 479, 503, 515; 375/140, 146, 147, 354, 367

(56) **References Cited**

U.S. PATENT DOCUMENTS

4,901,307 2/1990 Gilhousen et al. .
5,022,049 6/1991 Abrahamson et al. .
5,084,900 1/1992 Taylor .

(List continued on next page.)

FOREIGN PATENT DOCUMENTS

374373A1 7/1989 (DE) .
743732A1 7/1989 (DE) .
0464839A2 1/1992 (EP) .

(List continued on next page.)

OTHER PUBLICATIONS

Zhao Liu et al., "SIR–Based Call Admission Control for DS–CDMA Cellular Systems", IEEE Journal on Selected Areas in Communications, US, IEEE Inc. New York, vol. 12, No. 4, May 1, 1994, pp. 638–644.

(List continued on next page.)

Primary Examiner—Wellington Chin
Assistant Examiner—Kwang B. Yao
(74) *Attorney, Agent, or Firm*—Volpe and Koenig, P.C.

(57) **ABSTRACT**

A multiple access, spread-spectrum communication system processes a plurality of information signals received by a Radio Carrier Station (RCS) over telecommunication lines for simultaneous transmission over a radio frequency (RF) channel as a code-division-multiplexed (CDM) signal to a group of Subscriber Units (SUs). The RCS receives a call request signal that corresponds to a telecommunication line information signal, and a user identification signal that identifies a user to receive the call. The RCS includes a plurality of Code Division Multiple Access (CDMA) modems, one of which provides a global pilot code signal. The modems provide message code signals synchronized to the global pilot signal. Each modem combines an information signal with a message code signal to provide a CDM processed signal. The RCS includes a system channel controller is coupled to receive a remote call. An RF transmitter is connected to all of the modems to combine the CDM processed signals with the global pilot code signal to generate a CDM signal. The RF transmitter also modulates a carrier signal with the CDM signal and transmits the modulated carrier signal through an RF communication channel to the SUs. Each SU includes a CDMA modem which is also synchronized to the global pilot signal. The CDMA modem despreads the CDM signal and provides a despread information signal to the user. The system includes a closed loop power control system for maintaining a minimum system transmit power level for the RCS and the SUs, and system capacity management for maintaining a maximum number of active SUs for improved system performance.

6 Claims, 37 Drawing Sheets

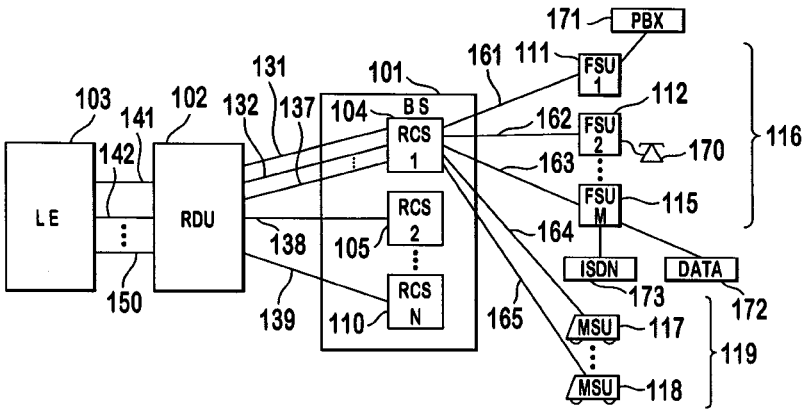

U.S. PATENT DOCUMENTS

5,093,840	3/1992	Schilling .	
5,103,459	4/1992	Gilhoussen et al. .	
5,109,390	4/1992	Gilhousen et al. .	
5,166,951	11/1992	Schilling .	
5,193,094	3/1993	Viterbi .	
5,204,876	4/1993	Bruckert et al. .	
5,228,054	7/1993	Rueth et al. .	
5,228,056	7/1993	Schilling .	
5,237,586	8/1993	Bottomley .	
5,241,690	8/1993	Larsson et al. .	
5,245,629	9/1993	Hall .	
5,253,268	10/1993	Omura et al. .	
5,257,283	10/1993	Gilhousen et al. .	
5,260,967	11/1993	Schilling .	
5,265,119	11/1993	Gilhousen et al. .	
5,267,262	11/1993	Wheatley, III .	
5,283,536	2/1994	Wheatley, III et al. .	
5,295,152	3/1994	Gudmundson et al. .	
5,299,226	3/1994	Schilling .	
5,299,228	3/1994	Hall .	
5,309,474	5/1994	Gilhousen et al. .	
5,327,455	7/1994	DeGaudenzi et al. .	
5,327,467	7/1994	DeGaudenzi et al. .	
5,341,396	8/1994	Higgins et al. .	
5,345,598	9/1994	Dent .	
5,347,536	9/1994	Meehan .	
5,349,606	9/1994	Lovell et al. .	
5,373,502	12/1994	Turban .	
5,377,183	12/1994	Dent .	
5,392,287	2/1995	Tiedemann, Jr. et al. .	
5,396,516	3/1995	Padovani et al. .	
5,404,376	4/1995	Dent .	
5,414,728	5/1995	Zehavi .	
5,414,729	5/1995	Fenton .	
5,416,797	5/1995	Gilhousen et al. .	
5,420,896	5/1995	Schilling .	
5,430,724	7/1995	Fall et al.	370/79
5,430,760	7/1995	Dent .	
5,440,597	8/1995	Chung et al. .	
5,442,662	8/1995	Fukasawa et al. .	
5,488,629	1/1996	Takahashi et al. .	
5,519,736	5/1996	Ishida .	
5,559,790	9/1996	Yano et al. .	
5,926,501 *	7/1999	Souissi et al.	375/200

FOREIGN PATENT DOCUMENTS

0526106A2	2/1993	(EP) .
0654913A2	5/1995	(EP) .
0656716A1	6/1995	(EP) .
0668662A1	8/1995	(EP) .
0744876	11/1996	(EP) .
2301746	12/1996	(GB) .
WO93/07702	4/1993	(WO) .
WO95/03652	2/1995	(WO) .
WO9507578	3/1995	(WO) .
WO97/02665	1/1997	(WO) .

OTHER PUBLICATIONS

Raymond W. Nettleton, "Spectral Efficiency in Cellular Land–Mobile Communications: A Spread–Spectrum Approach," UMI Dissertation Information Service (1978) 204 pp.

Hossein Al Avi, "Power Control and Interference Management in a Spread–Spectrum Cellular Mobile Radio System," UMI Dissertation Information Services, (1984). 129 pp.

"Code Division Multiple Access (CDMA)", Franz Josef Hagmanns, Volker Hespelt, 8273 ANT Nachrichtentechnische Berichte (1993) August No. 10, Backnang, DE, pp. 64–71.

"CDMA and ATM–zwei Technologien, eim Ziel", 2323 Telcom Report (Siemens) 18(1995) Maerz/Apr., No 2, Munchen, DE, pp. 60–63.

Search Report, Jan. 14, 1997.

Search Report, Apr. 10, 1997.

Search Report, Apr. 15, 1997.

Search Report, Apr. 17, 1997.

Search Report, Apr. 29, 1997.

Search Report, Mar. 5, 1997.

* cited by examiner

FIG. 1

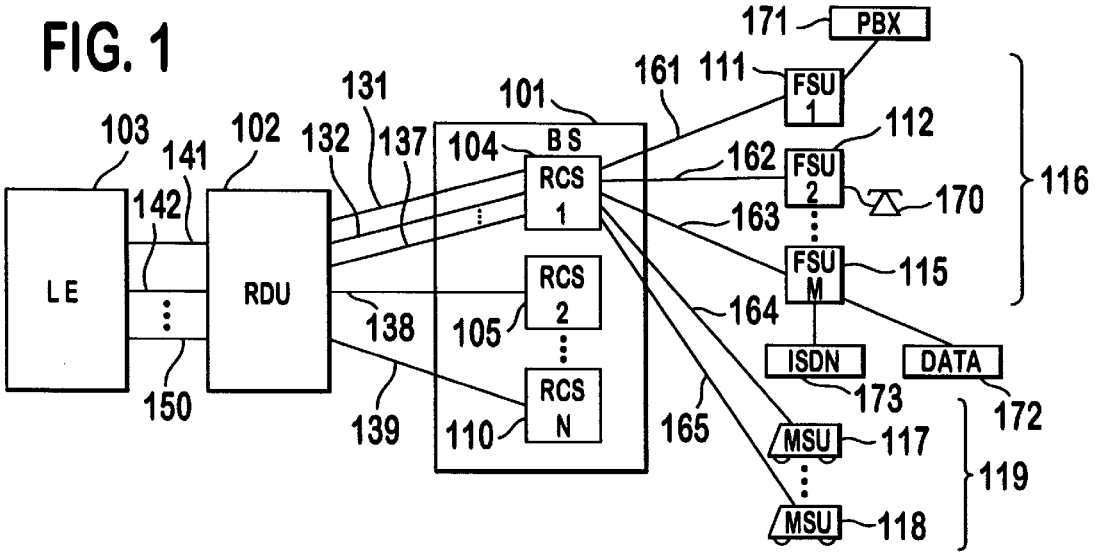

FIG. 2a

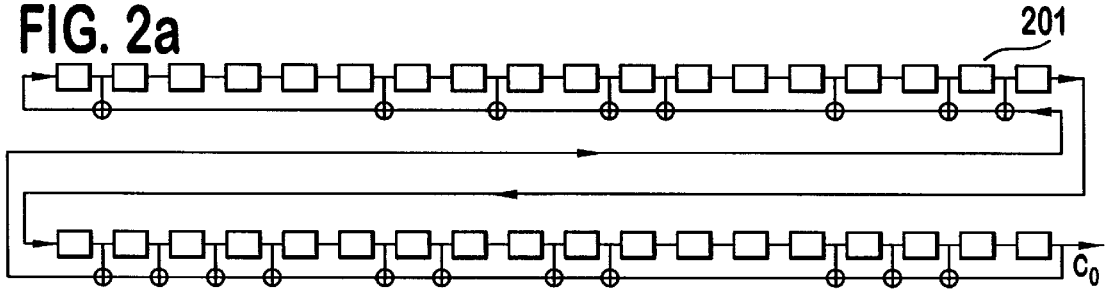

FIG. 2b

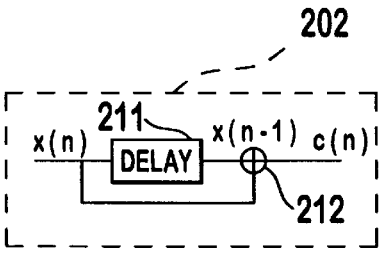

FIG. 2c

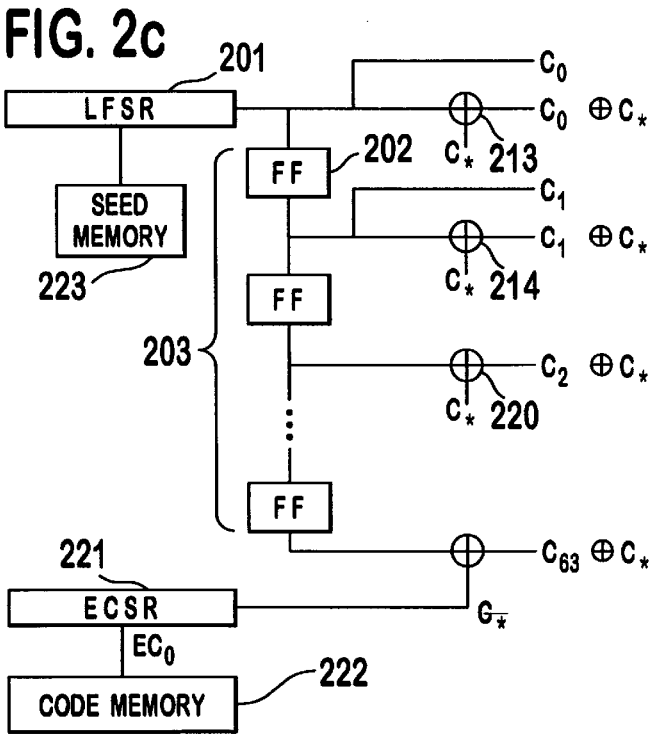

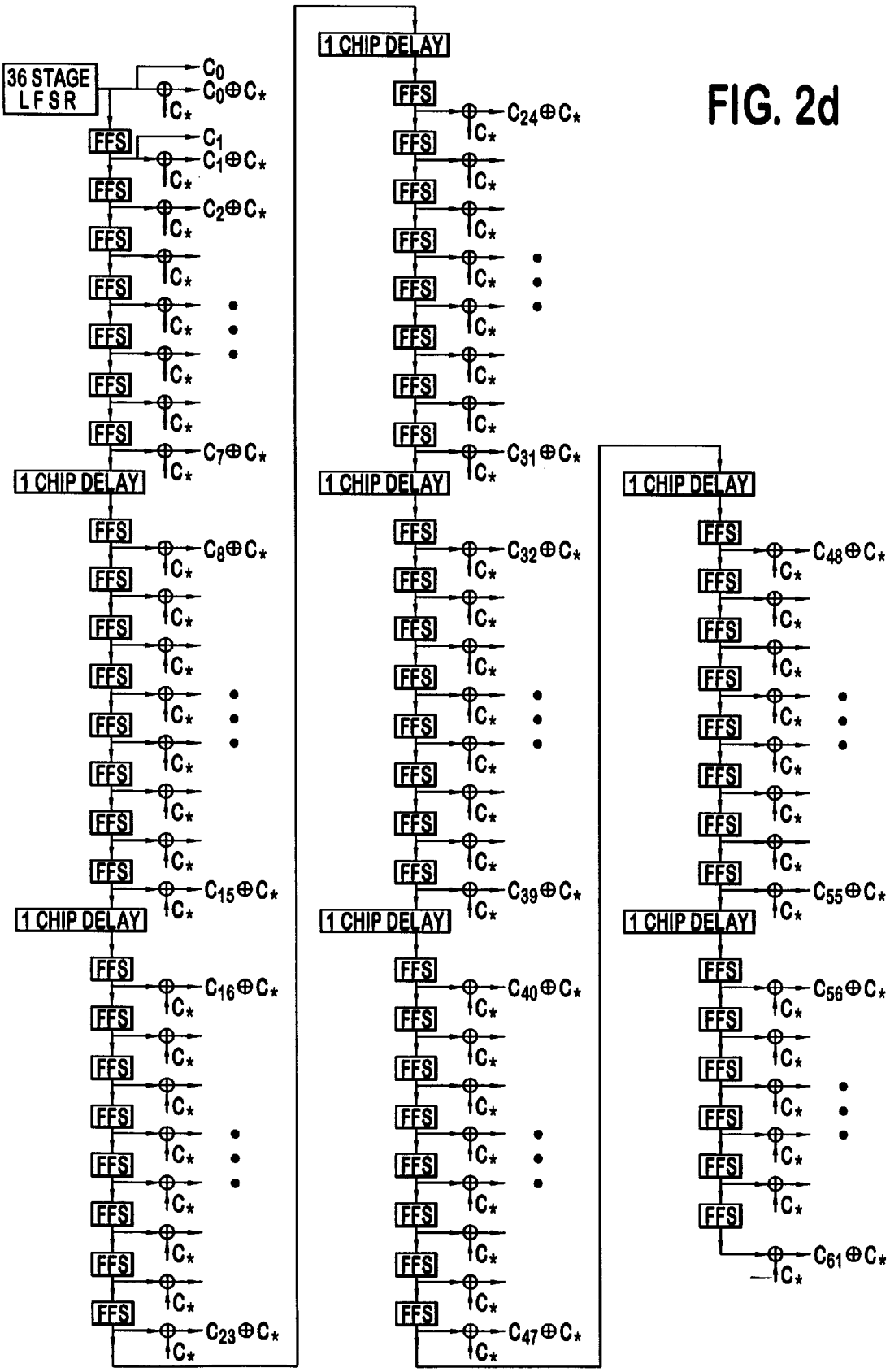
36 STAGE LFSR
FFS
1 CHIP DELAY
C0
C0⊕C*
C1
C1⊕C*
C2⊕C*
C7⊕C*
C8⊕C*
C15⊕C*
C16⊕C*
C23⊕C*
C24⊕C*
C31⊕C*
C32⊕C*
C39⊕C*
C40⊕C*
C47⊕C*
C48⊕C*
C55⊕C*
C56⊕C*
C61⊕C*
C*

FIG. 2d

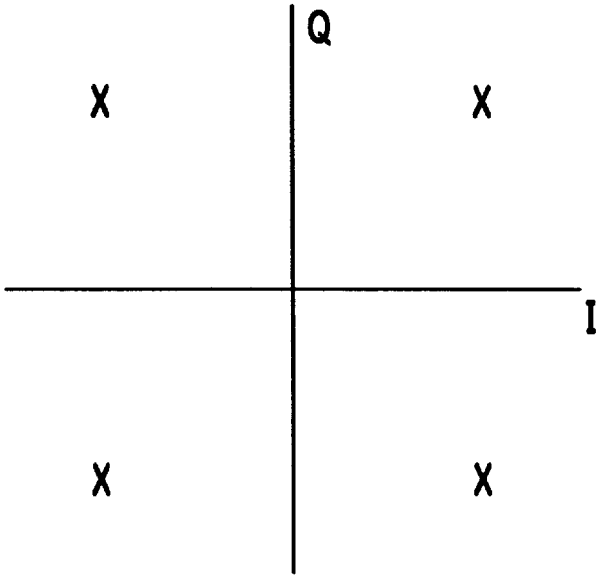

FIG. 3a

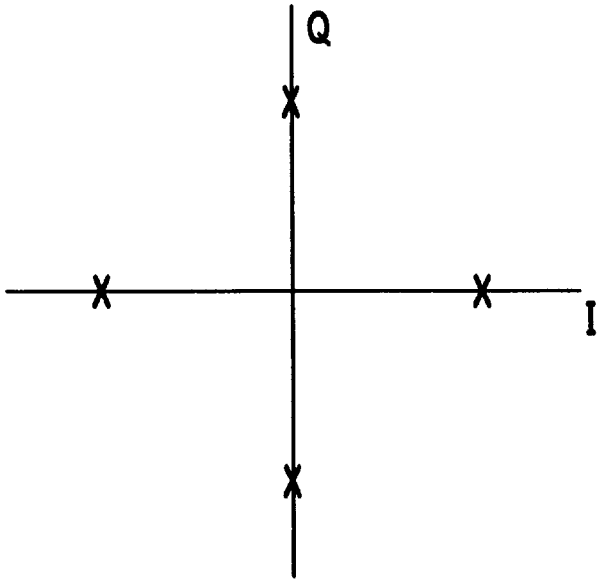

FIG. 3b

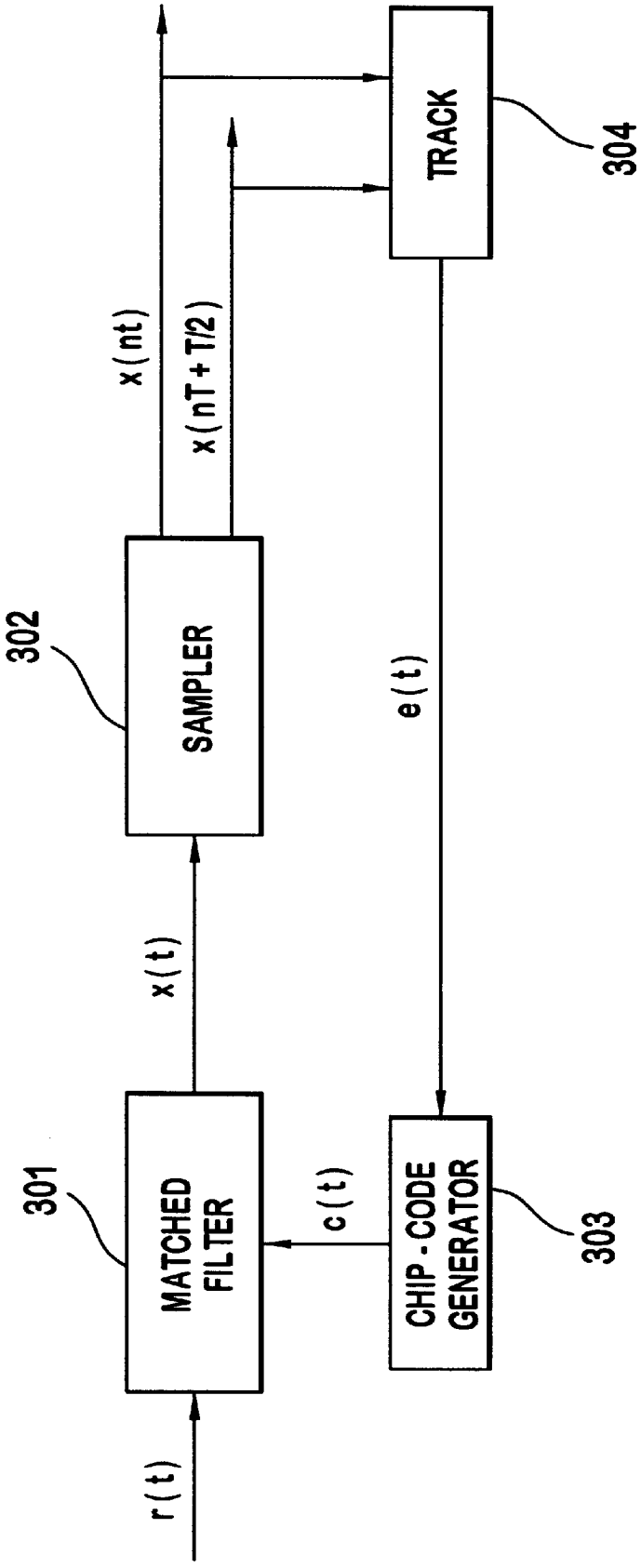
TRACK
304
x(nt)
x(nT+T/2)
302
SAMPLER
e(t)
x(t)
301
MATCHED FILTER
c(t)
CHIP-CODE GENERATOR
303
r(t)

FIG. 3c

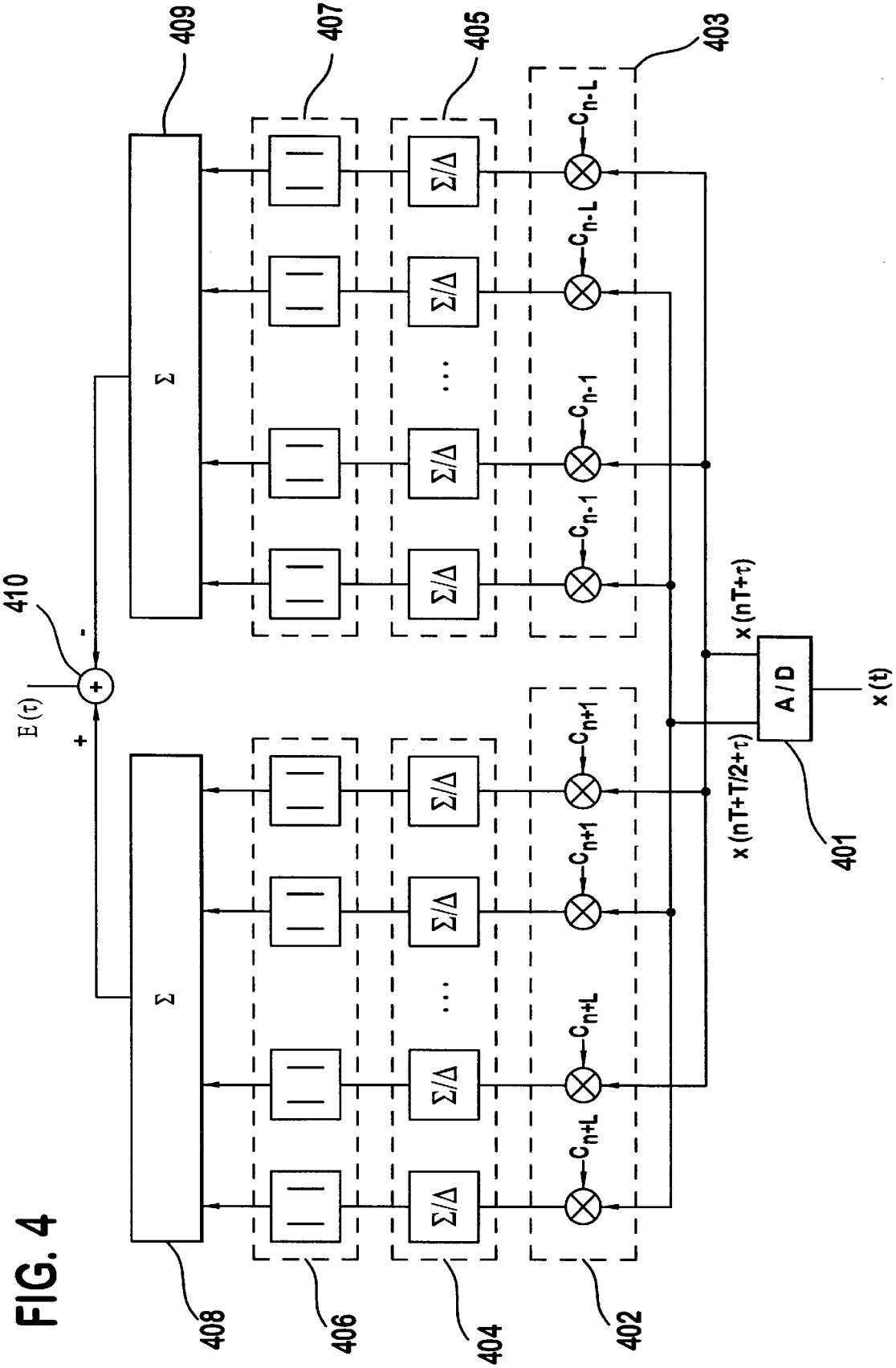
409
407
405
403
410
E(τ)
Σ
Σ/Δ
C_{n-L}
C_{n-1}
C_{n+1}
C_{n+L}
x(nT+τ)
x(nT+T/2+τ)
A/D
x(t)
401
408
406
404
402

FIG. 4

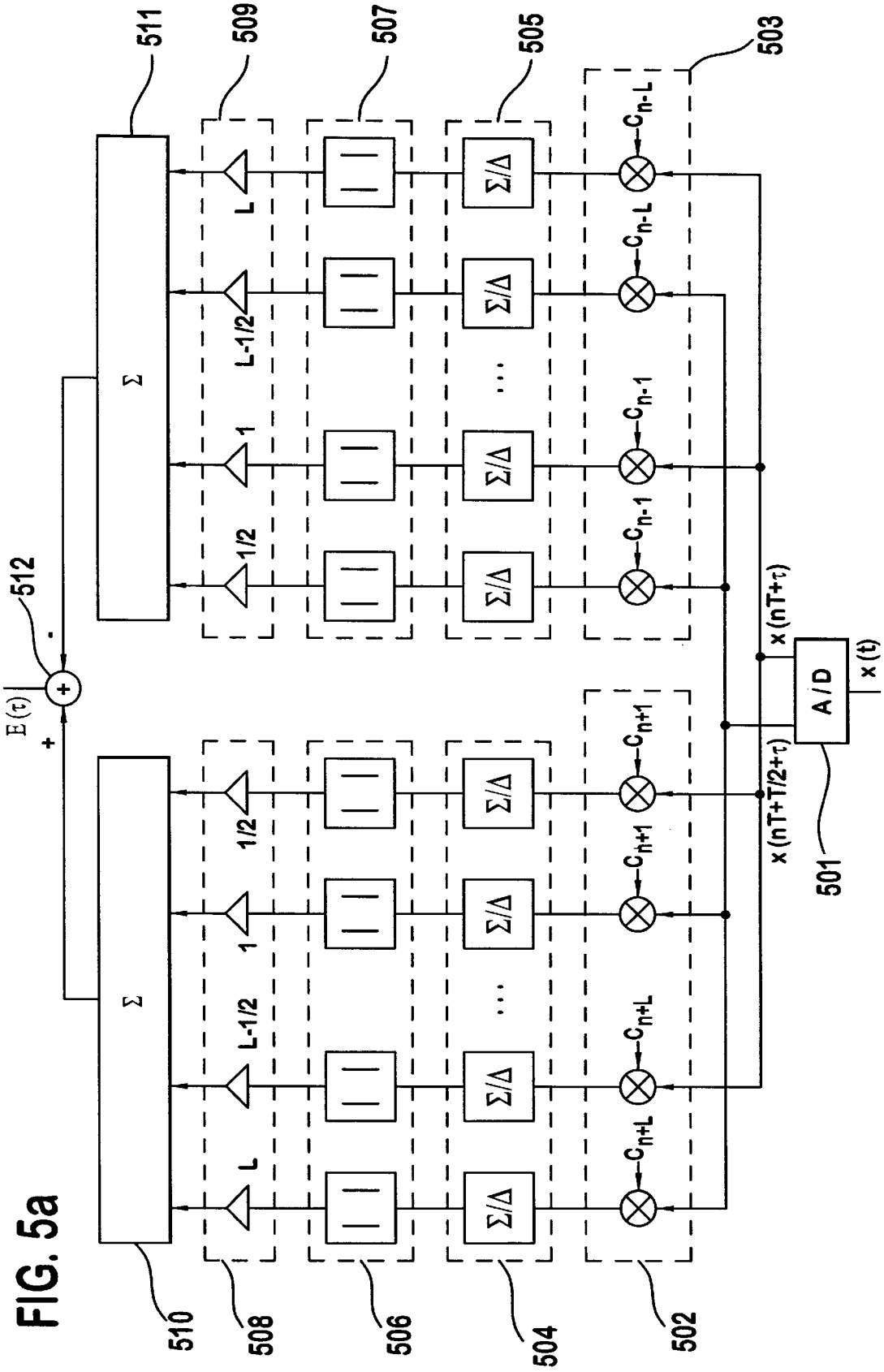
511
509
507
505
503
512
E(τ)
Σ
L
L-1/2
1
1/2
Σ/Δ
C_{n-L}
C_{n-1}
C_{n+1}
C_{n+L}
x(nT+τ)
x(nT+T/2+τ)
A/D
x(t)
501
510
508
506
504
502

FIG. 5a

FIG. 5b

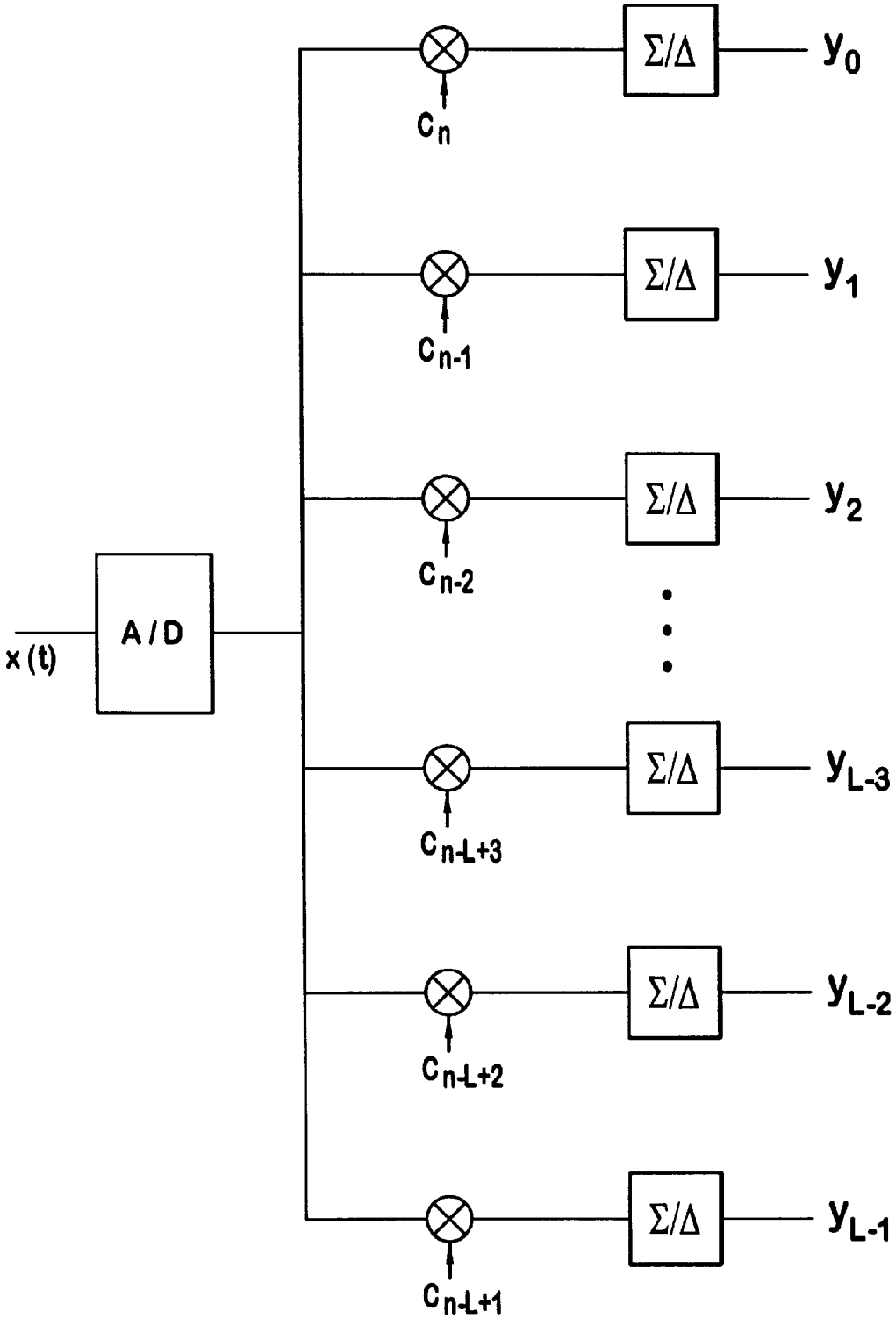
x(t)
A/D
Σ/Δ
Σ/Δ
Σ/Δ
Σ/Δ
Σ/Δ
Σ/Δ
y_0
y_1
y_2
y_{L-3}
y_{L-2}
y_{L-1}
c_n
c_{n-1}
c_{n-2}
c_{n-L+3}
c_{n-L+2}
c_{n-L+1}

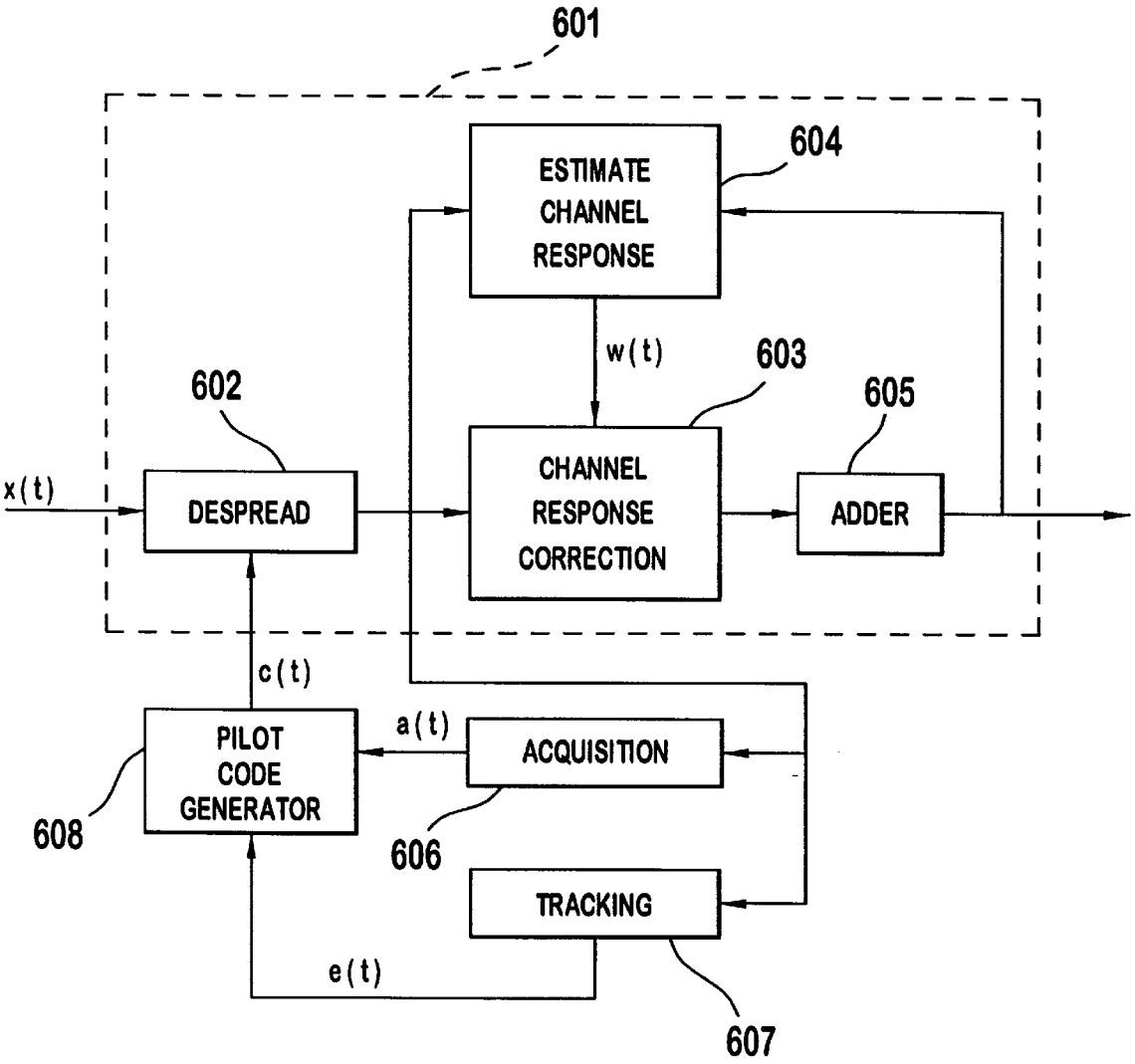
601
ESTIMATE CHANNEL RESPONSE
604
w(t)
603
602
605
x(t)
DESPREAD
CHANNEL RESPONSE CORRECTION
ADDER
c(t)
a(t)
PILOT CODE GENERATOR
ACQUISITION
608
606
TRACKING
e(t)
607

FIG. 6

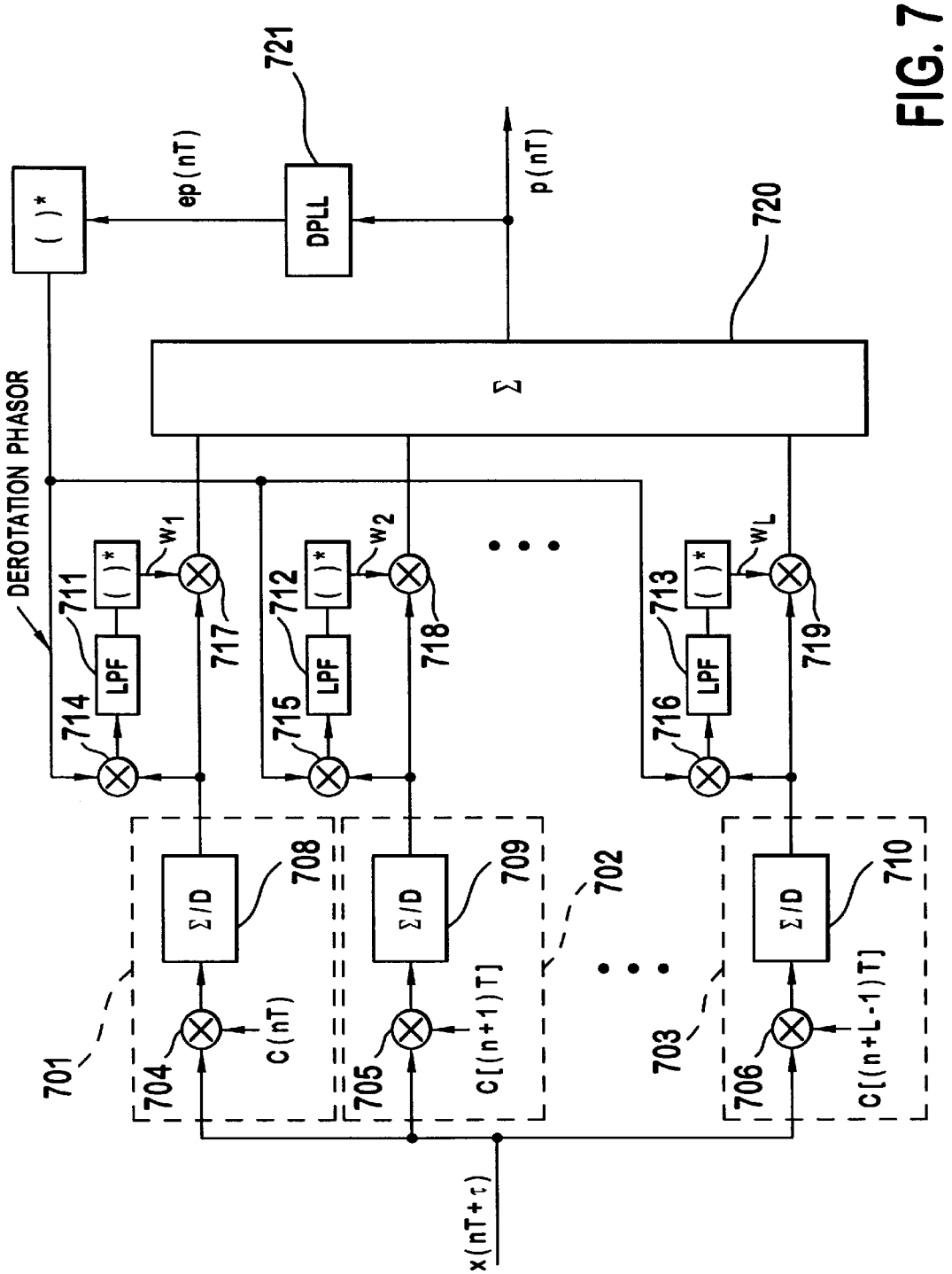
721
ep(nT)
DPLL
p(nT)
( )*
720
Σ
DEROTATION PHASOR
711
712
713
( )*
LPF
714
715
716
717
718
719
w1
w2
wL
Σ/D
708
709
710
702
701
703
704
705
706
C(nT)
C[(n+1)T]
C[(n+L-1)T]
x(nT+τ)

FIG. 7

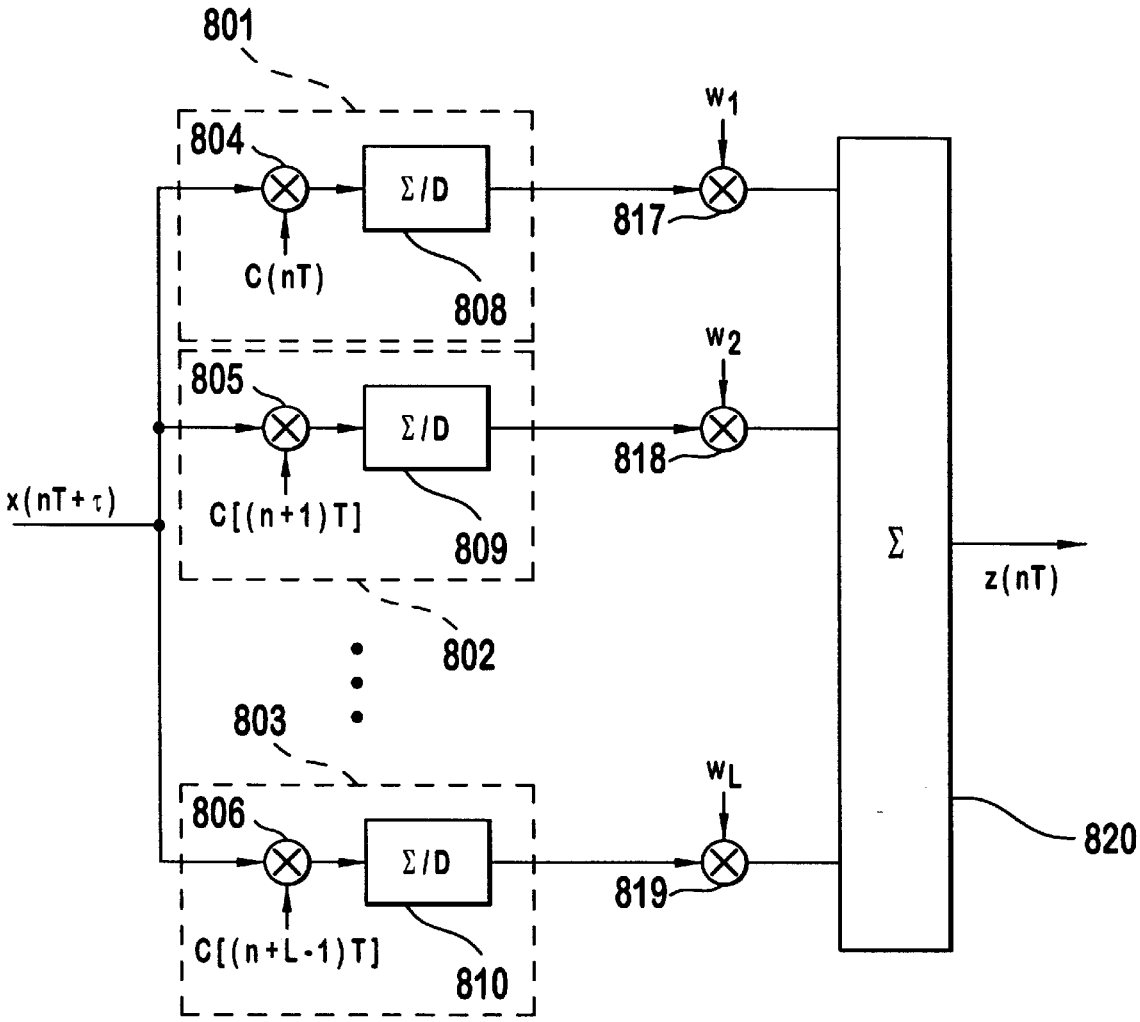
801
804
Σ/D
C(nT)
808
805
Σ/D
C[(n+1)T]
809
802
803
806
Σ/D
C[(n+L-1)T]
810
x(nT+τ)
w1
817
w2
818
wL
819
Σ
z(nT)
820

FIG. 8a

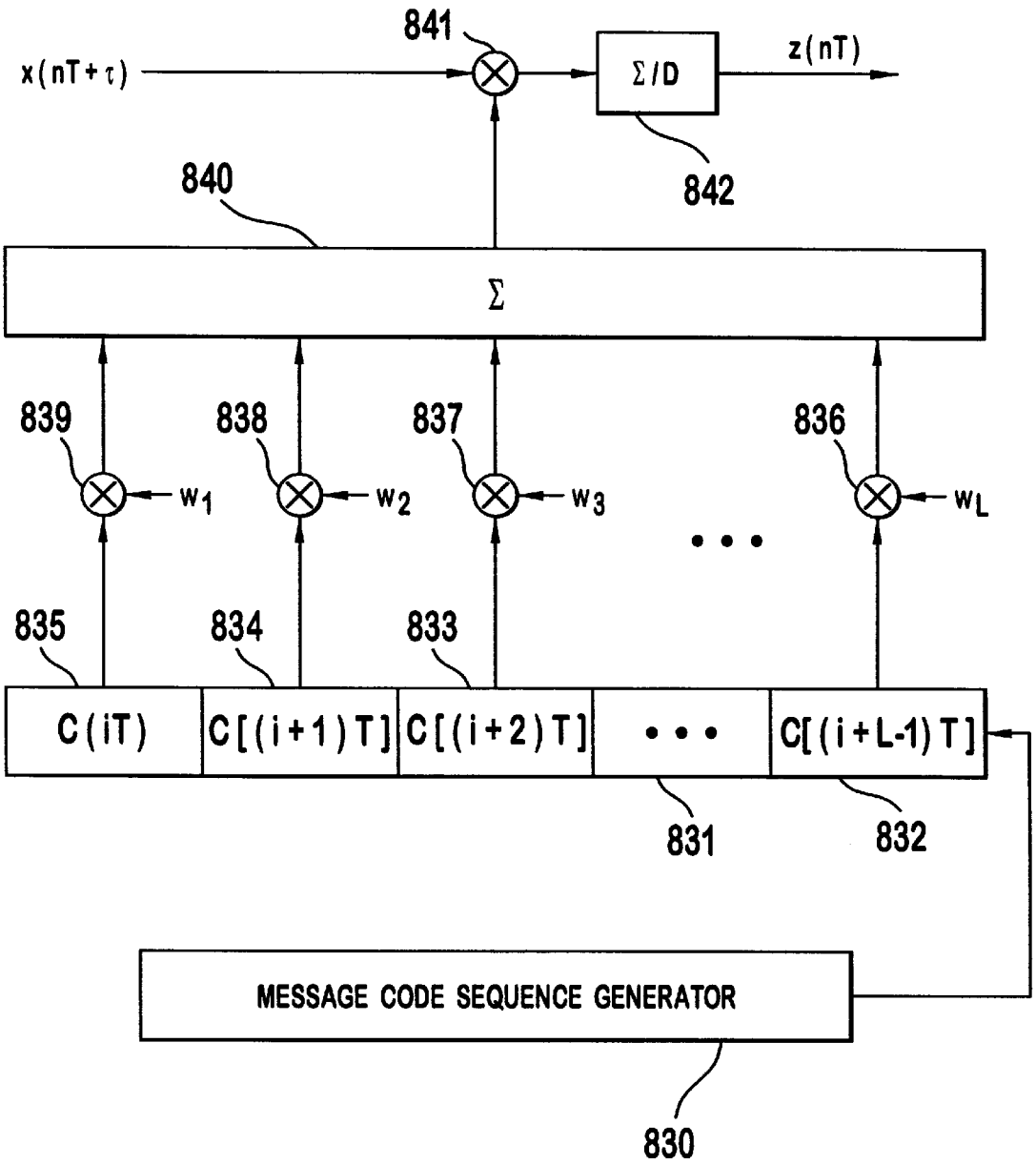
841
x(nT+τ)
Σ/D
z(nT)
842
840
Σ
839
838
837
836
w1
w2
w3
wL
835
834
833
C(iT)
C[(i+1)T]
C[(i+2)T]
C[(i+L-1)T]
831
832
MESSAGE CODE SEQUENCE GENERATOR
830

FIG. 8b

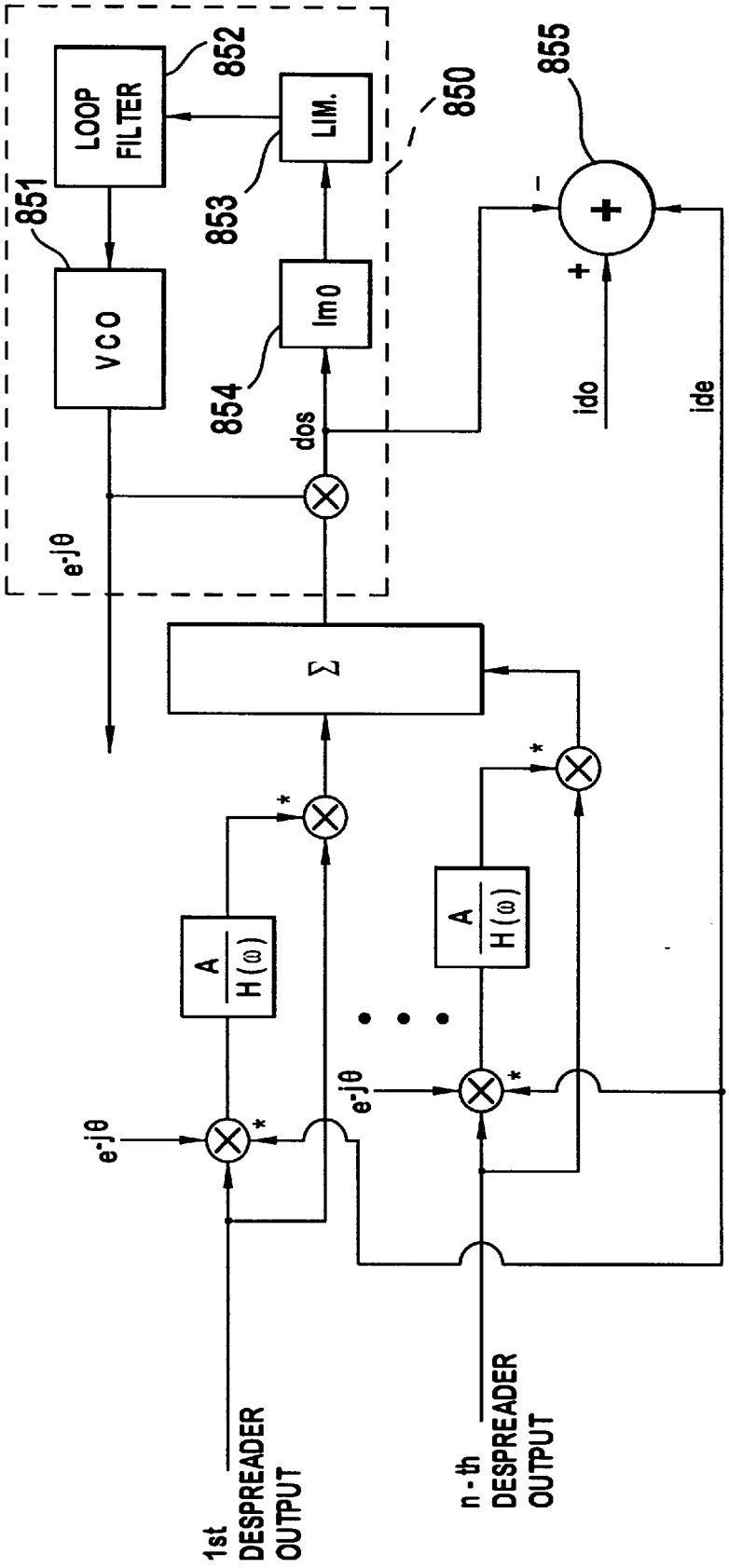
LOOP FILTER
852
LIM.
850
855
851
853
VCO
Im0
854
dos
ido
ide
e-jθ
Σ
A/H(ω)
A/H(ω)
e-jθ
e-jθ
1st DESPREADER OUTPUT
n-th DESPREADER OUTPUT

FIG. 8c

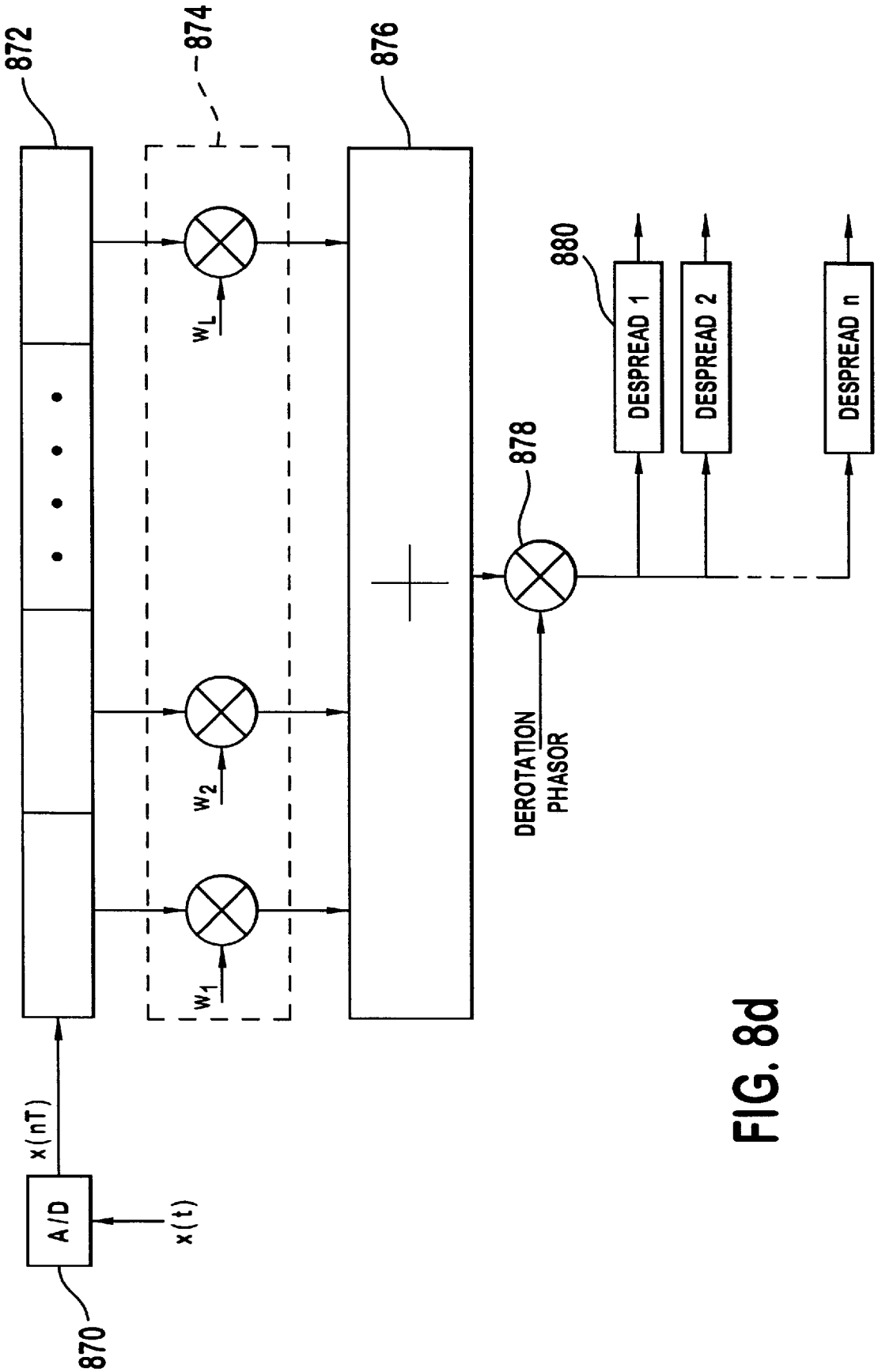
872
874
876
880
878
W_L
W_2
W_1
DESPREAD 1
DESPREAD 2
DESPREAD n
DEROTATION PHASOR
x(nT)
A/D
x(t)
870

FIG. 8d

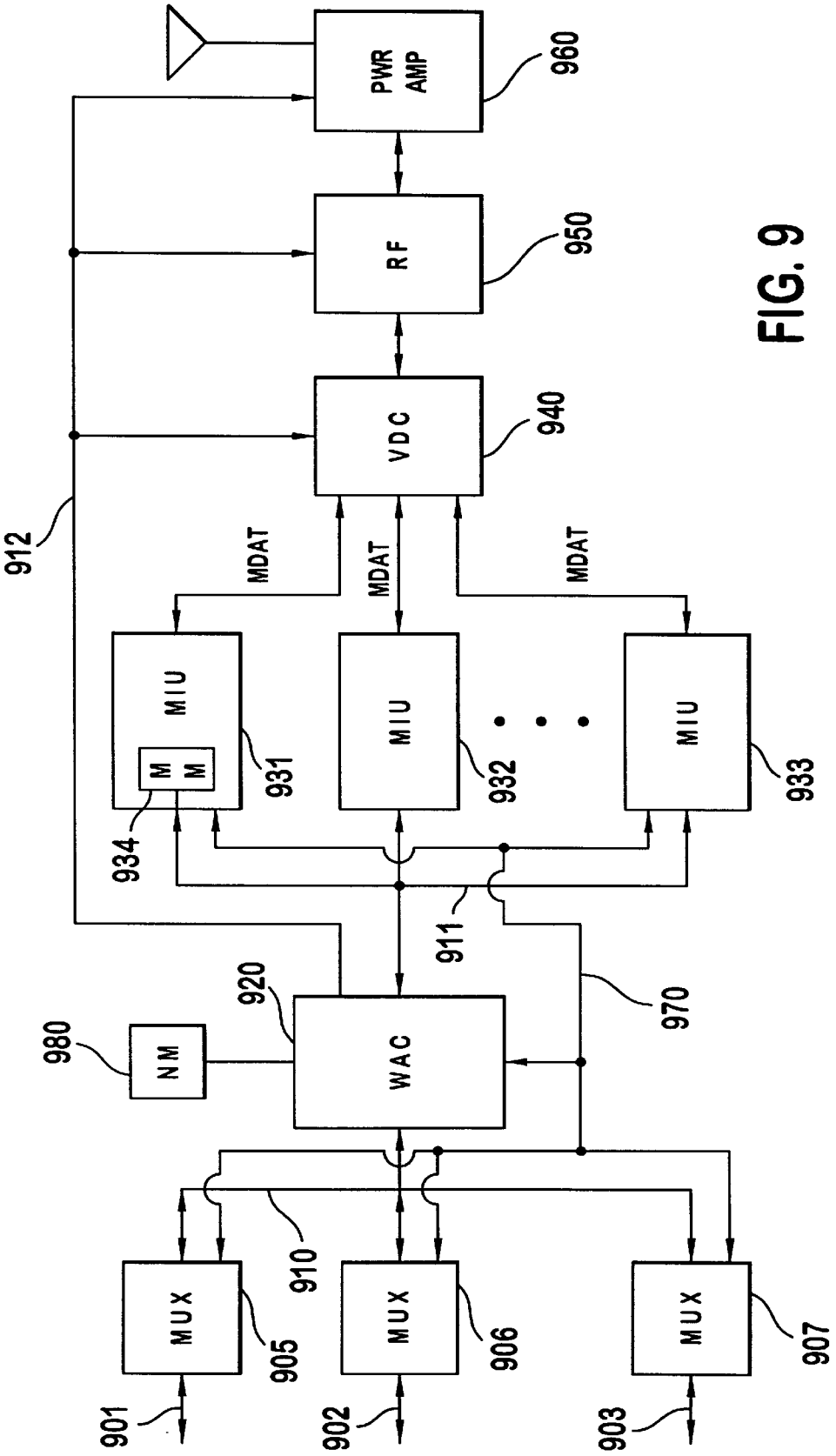
PWR AMP
960
RF
950
VDC
940
912
MDAT
MDAT
MDAT
MIU
M M
931
MIU
932
MIU
933
934
911
920
970
980
NM
WAC
910
MUX
905
MUX
906
MUX
907
901
902
903

FIG. 9

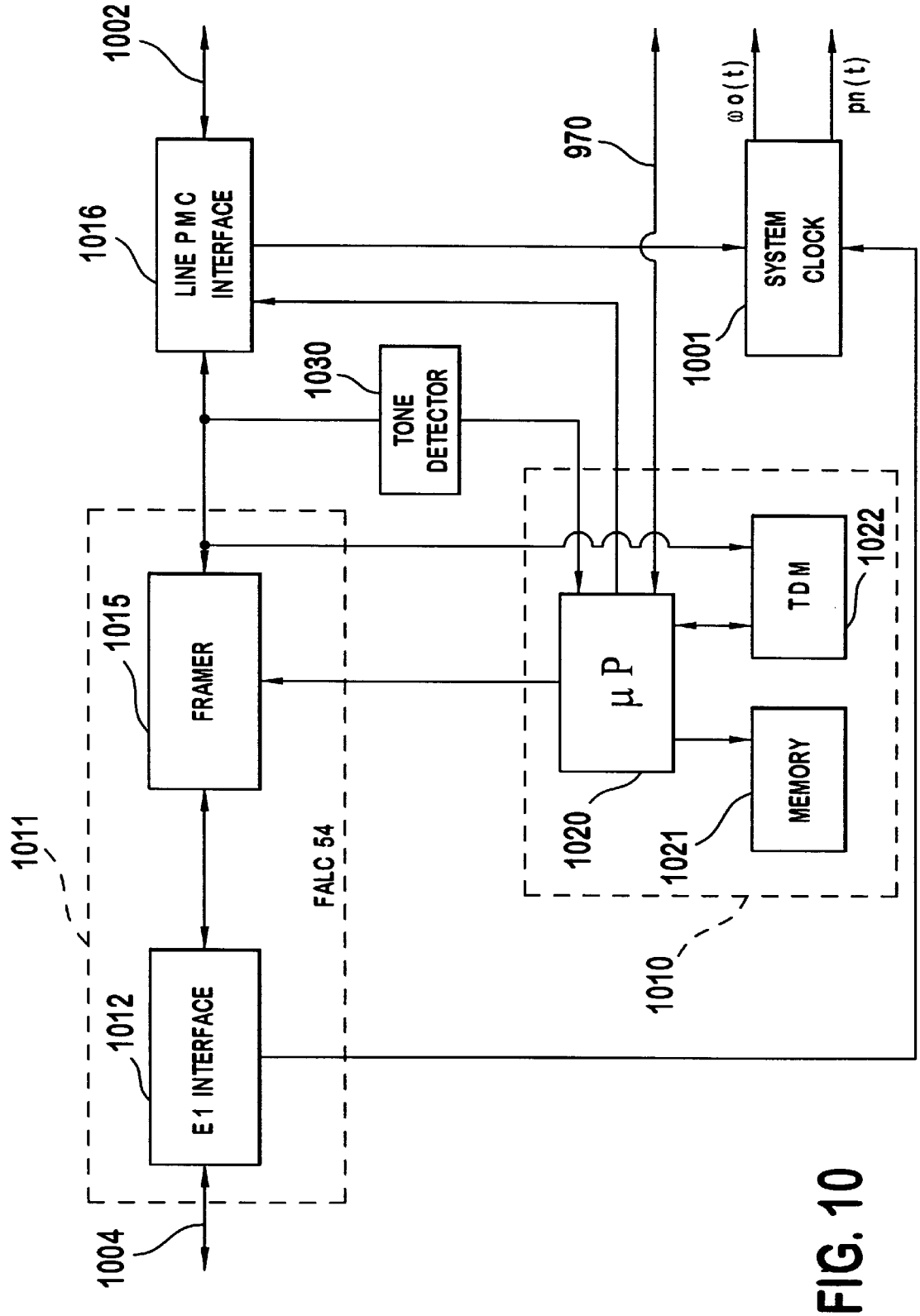
1002
LINE PMC INTERFACE
1016
970
ωo(t)
pn(t)
SYSTEM CLOCK
1001
1030
TONE DETECTOR
TDM
1022
μP
1015
FRAMER
MEMORY
1020
1021
1011
FALC 54
1010
1012
E1 INTERFACE
1004

FIG. 10

FIG. 11

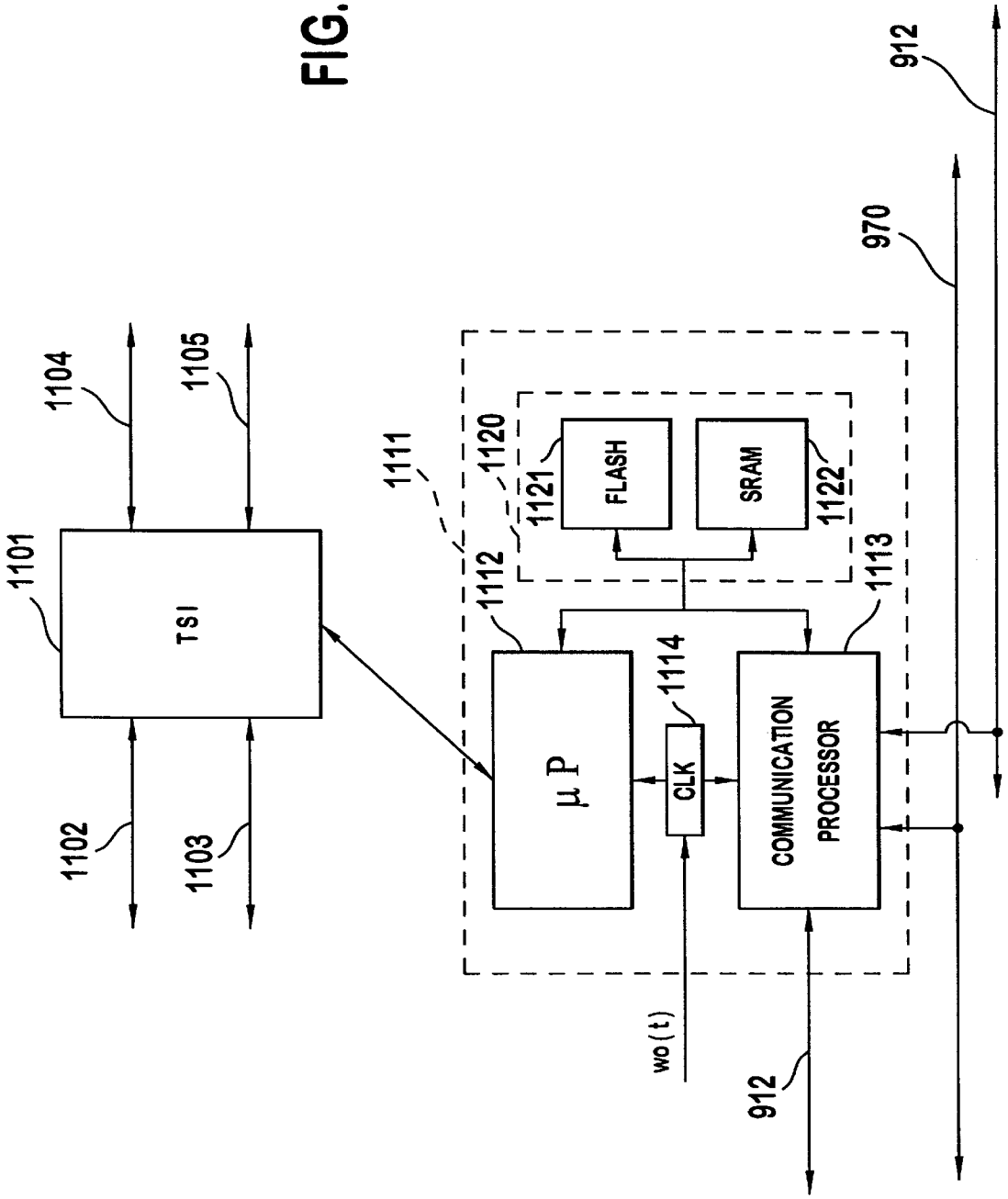
912
970
1104
1105
1111
1120
1121
FLASH
SRAM
1122
1101
TSI
1112
1113
1114
μP
CLK
COMMUNICATION PROCESSOR
1102
1103
wo(t)
912

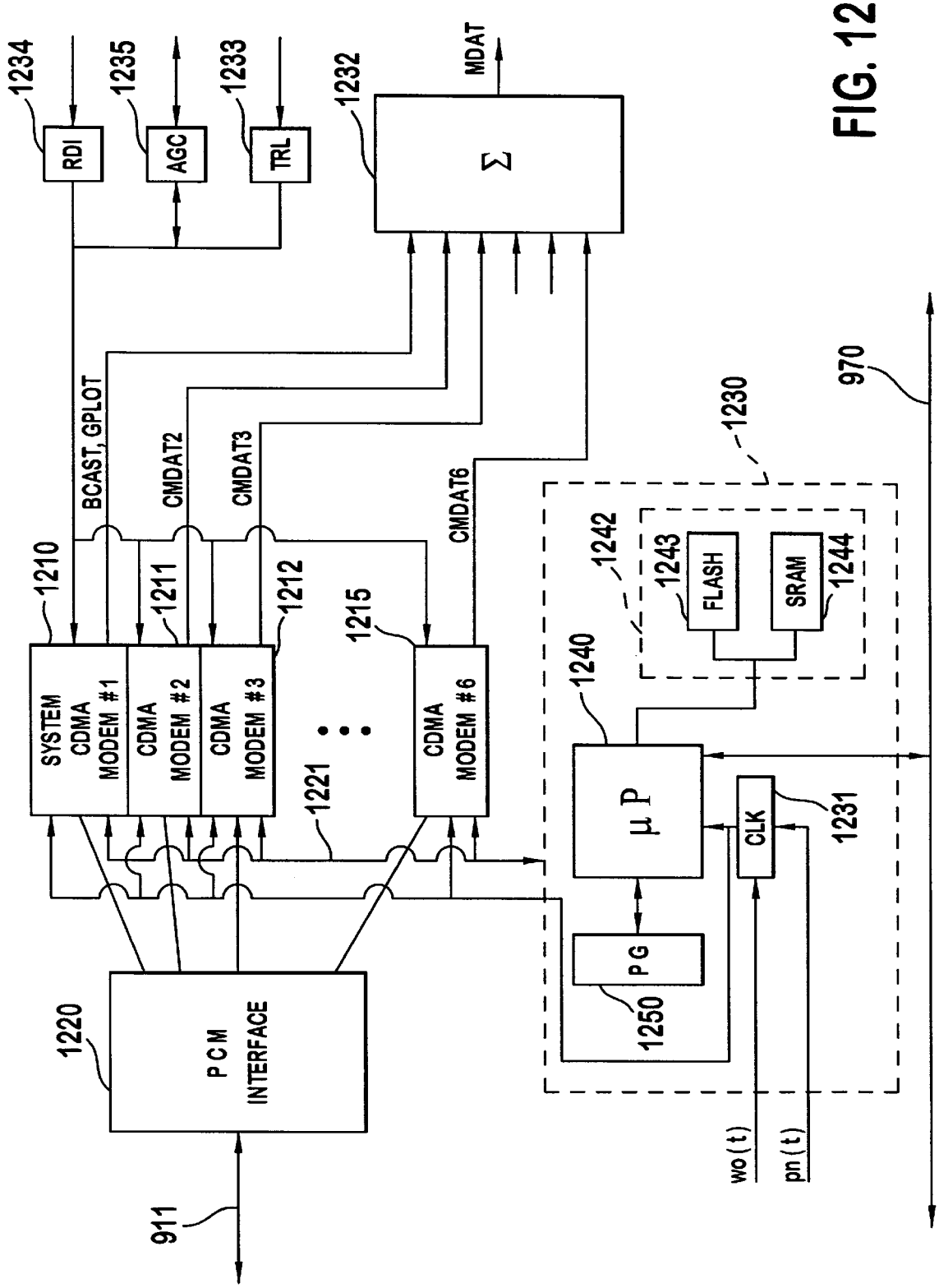
1234
RDI
1235
AGC
1233
TRL
1232
Σ
MDAT
970
1230
BCAST, GPLOT
CMDAT2
CMDAT3
CMDAT6
1210
1211
1212
1215
1242
1243
FLASH
SRAM
1244
1240
SYSTEM CDMA MODEM #1
CDMA MODEM #2
CDMA MODEM #3
CDMA MODEM #6
1221
μ P
CLK
1231
PG
1250
1220
PCM INTERFACE
911
wo(t)
pn(t)

FIG. 12

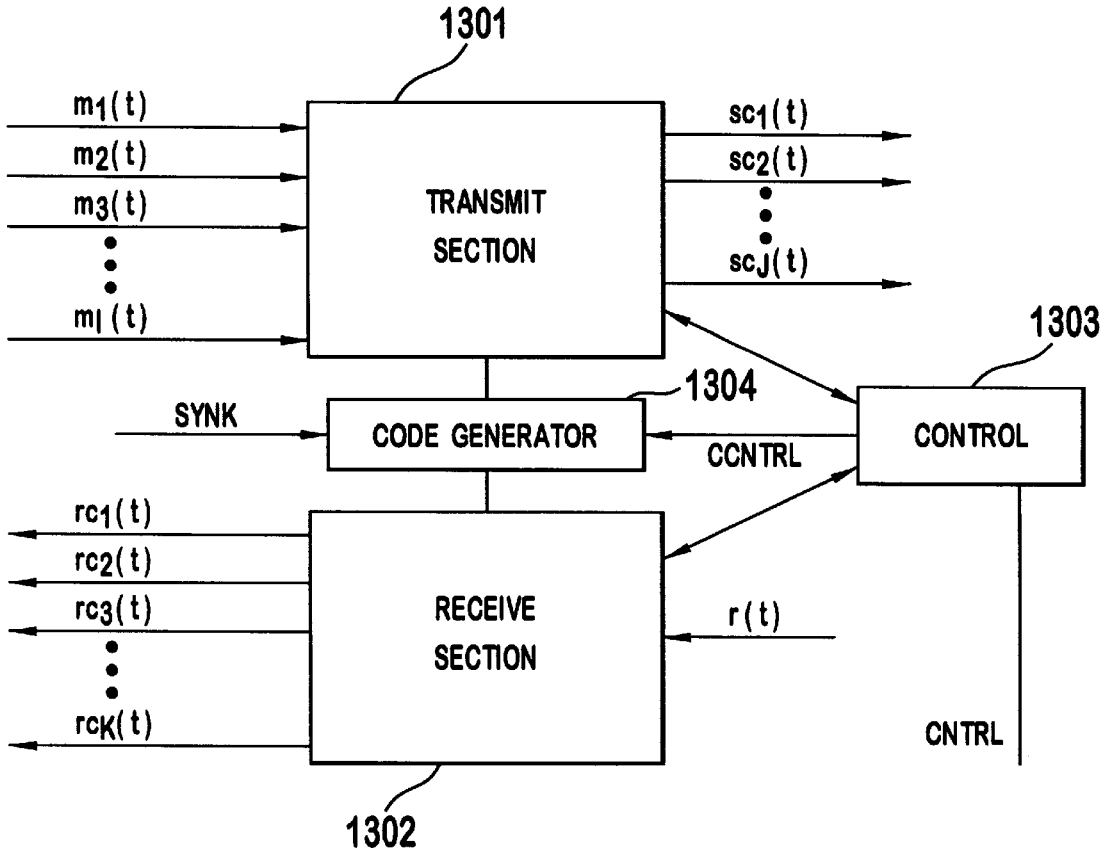
1301
m1(t)
m2(t)
m3(t)
mI(t)
TRANSMIT SECTION
sc1(t)
sc2(t)
scJ(t)
1303
1304
SYNK
CODE GENERATOR
CCNTRL
CONTROL
rc1(t)
rc2(t)
rc3(t)
rcK(t)
RECEIVE SECTION
r(t)
CNTRL
1302

FIG. 13

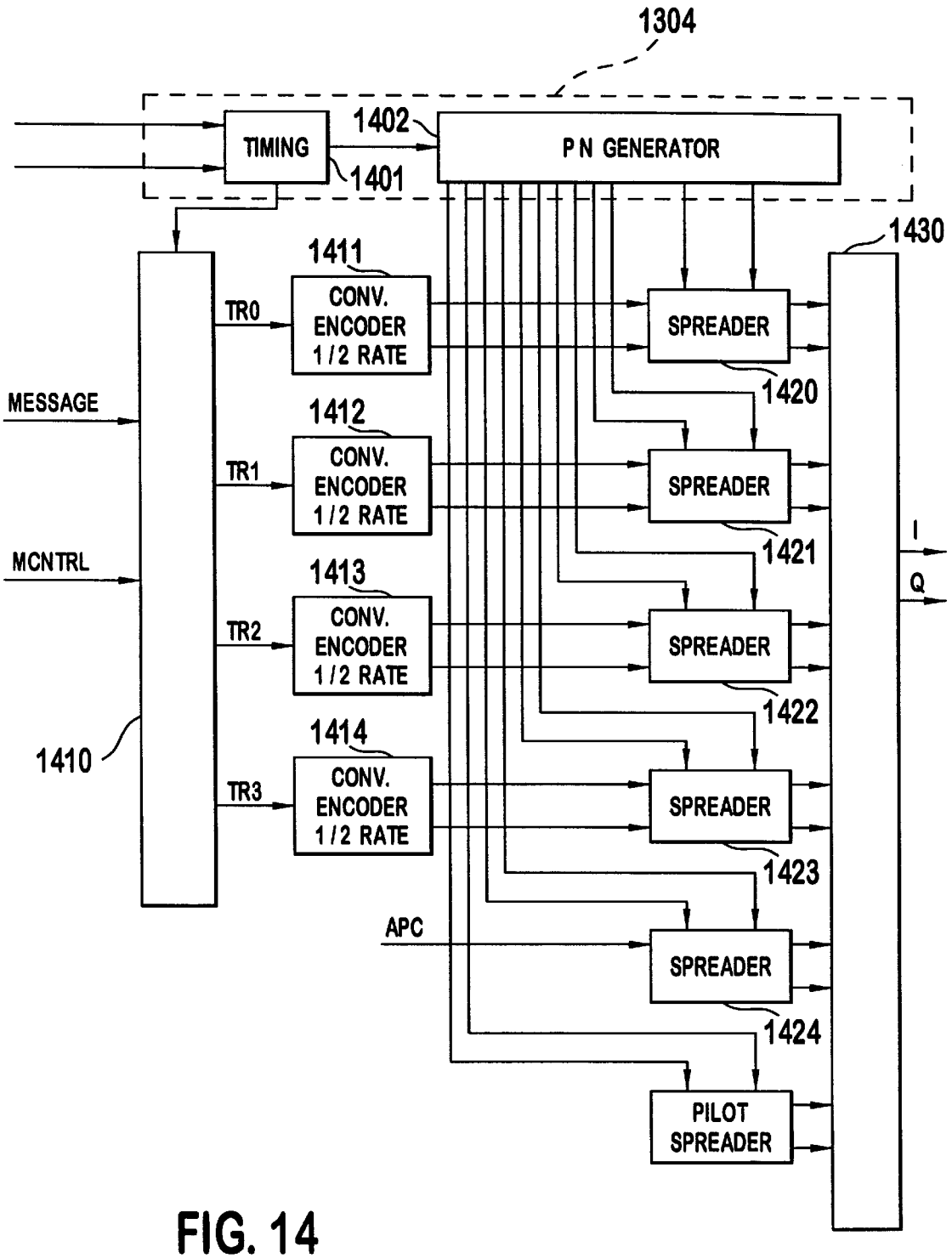
1304
TIMING
1402
1401
PN GENERATOR
1430
1411
CONV. ENCODER 1/2 RATE
TR0
SPREADER
1420
MESSAGE
1412
CONV. ENCODER 1/2 RATE
TR1
SPREADER
1421
I
MCNTRL
Q
1413
CONV. ENCODER 1/2 RATE
TR2
SPREADER
1422
1410
1414
CONV. ENCODER 1/2 RATE
TR3
SPREADER
1423
APC
SPREADER
1424
PILOT SPREADER

FIG. 14

FIG. 15

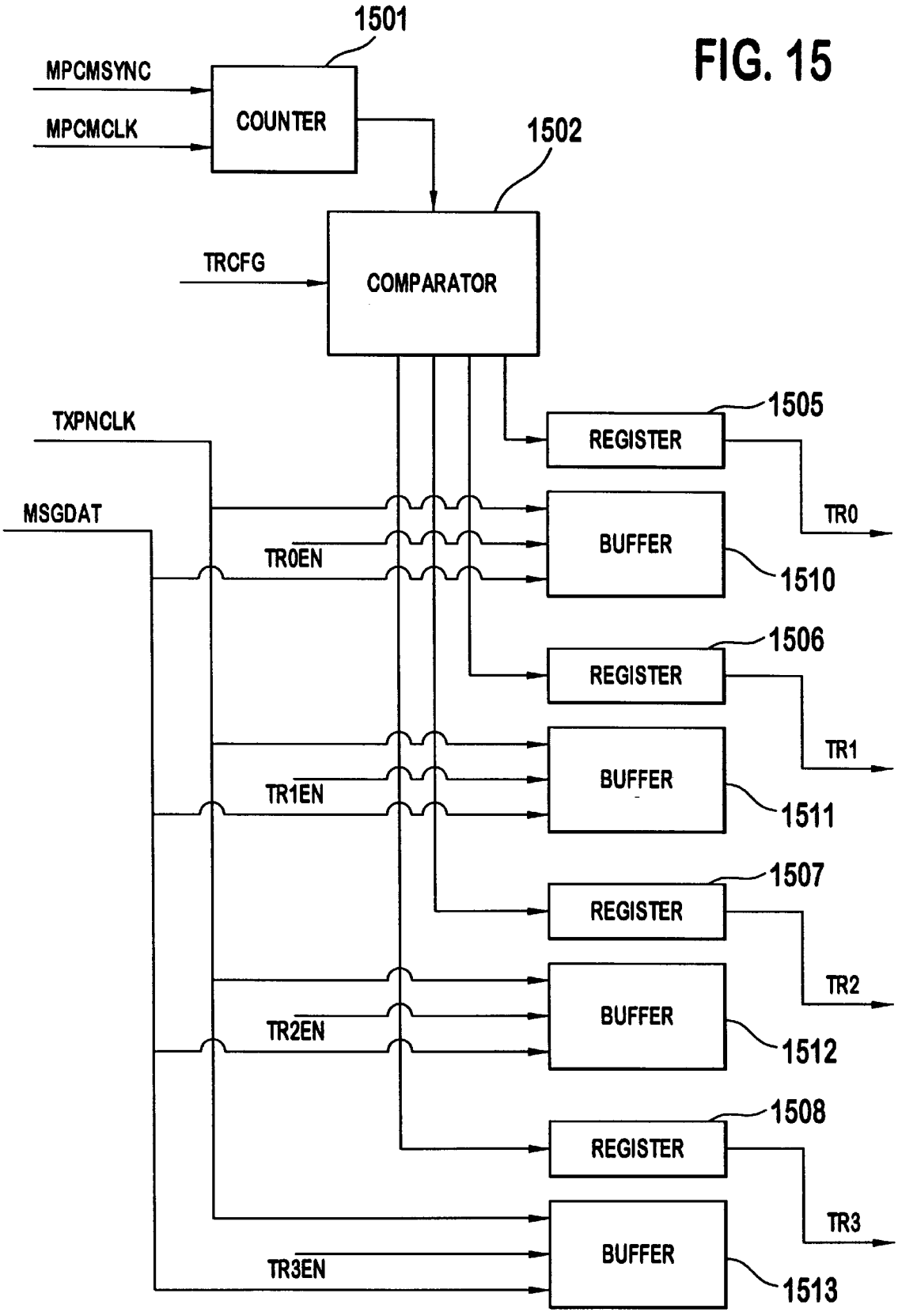
1501
MPCMSYNC
MPCMCLK
COUNTER
1502
TRCFG
COMPARATOR
TXPNCLK
MSGDAT
1505
REGISTER
TR0
BUFFER
TR0EN
1510
1506
REGISTER
TR1
BUFFER
TR1EN
1511
1507
REGISTER
TR2
BUFFER
TR2EN
1512
1508
REGISTER
TR3
BUFFER
TR3EN
1513

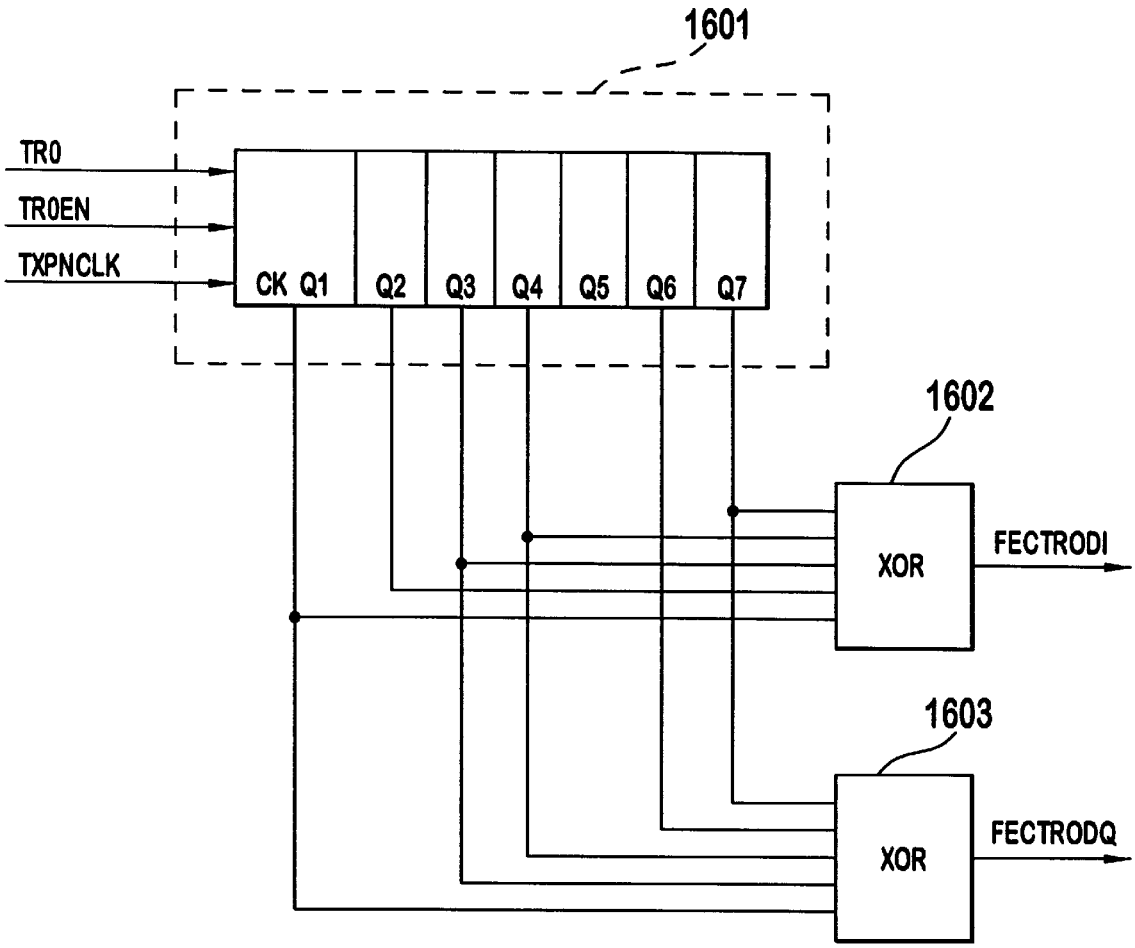
1601
TR0
TR0EN
TXPNCLK
CK Q1
Q2
Q3
Q4
Q5
Q6
Q7
1602
XOR
FECTRODI
1603
XOR
FECTRODQ

FIG. 16

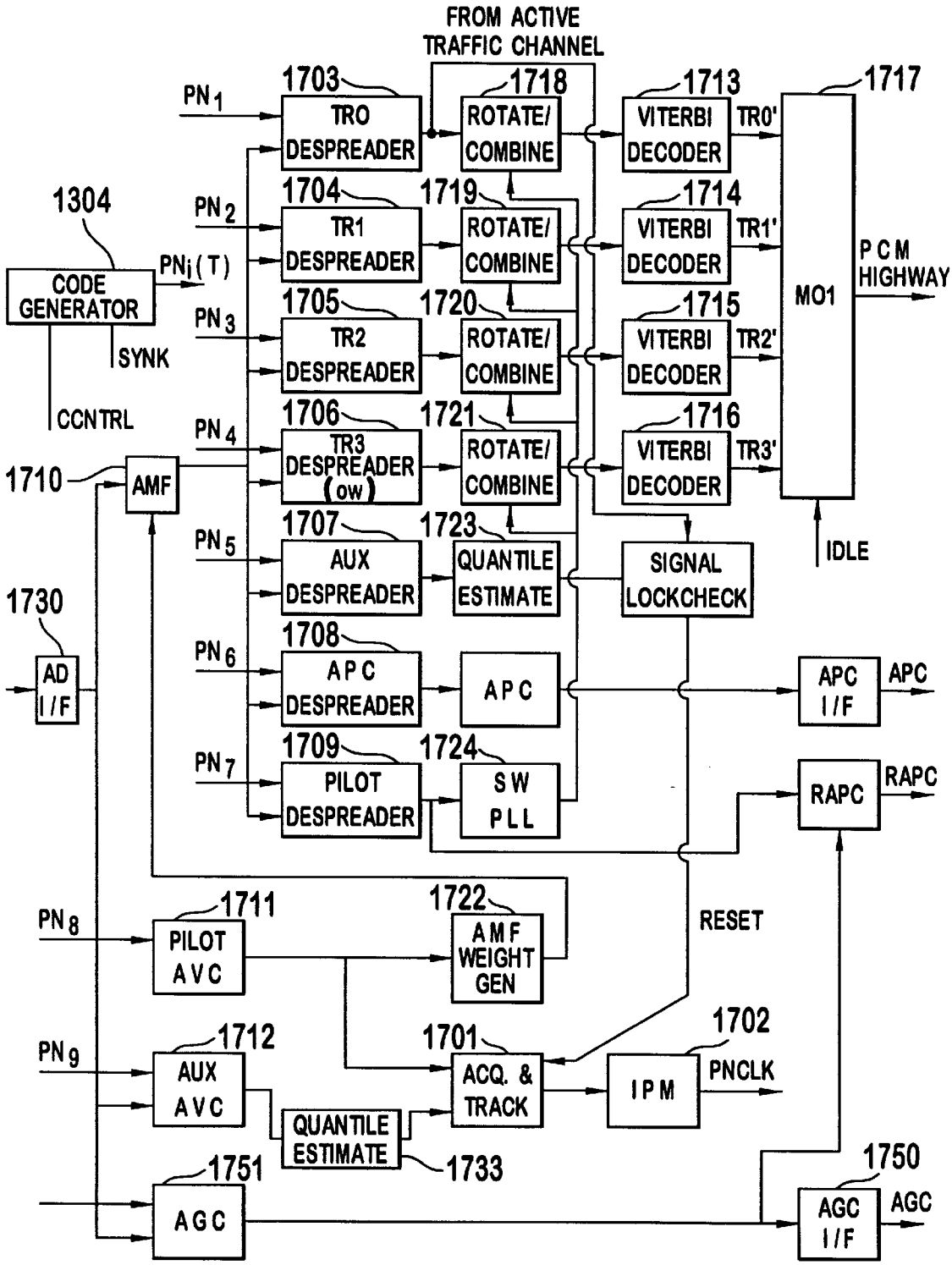
FROM ACTIVE TRAFFIC CHANNEL
1703
TRO DESPREADER
1718
ROTATE/ COMBINE
1713
VITERBI DECODER
TR0'
1717
PN1
1704
TR1 DESPREADER
1719
ROTATE/ COMBINE
1714
VITERBI DECODER
TR1'
1304
PN2
CODE GENERATOR
PNi(T)
SYNK
CCNTRL
1705
TR2 DESPREADER
1720
ROTATE/ COMBINE
1715
VITERBI DECODER
TR2'
MO1
PCM HIGHWAY
PN3
1706
TR3 DESPREADER (ow)
1721
ROTATE/ COMBINE
1716
VITERBI DECODER
TR3'
PN4
1710
AMF
1707
AUX DESPREADER
1723
QUANTILE ESTIMATE
SIGNAL LOCKCHECK
IDLE
PN5
1730
AD I/F
1708
APC DESPREADER
APC
APC I/F
APC
PN6
1709
PILOT DESPREADER
1724
SW PLL
RAPC
RAPC
PN7
PN8
1711
PILOT AVC
1722
AMF WEIGHT GEN
RESET
1712
AUX AVC
1701
ACQ. & TRACK
1702
IPM
PNCLK
PN9
QUANTILE ESTIMATE
1733
1751
AGC
1750
AGC I/F
AGC

FIG. 17

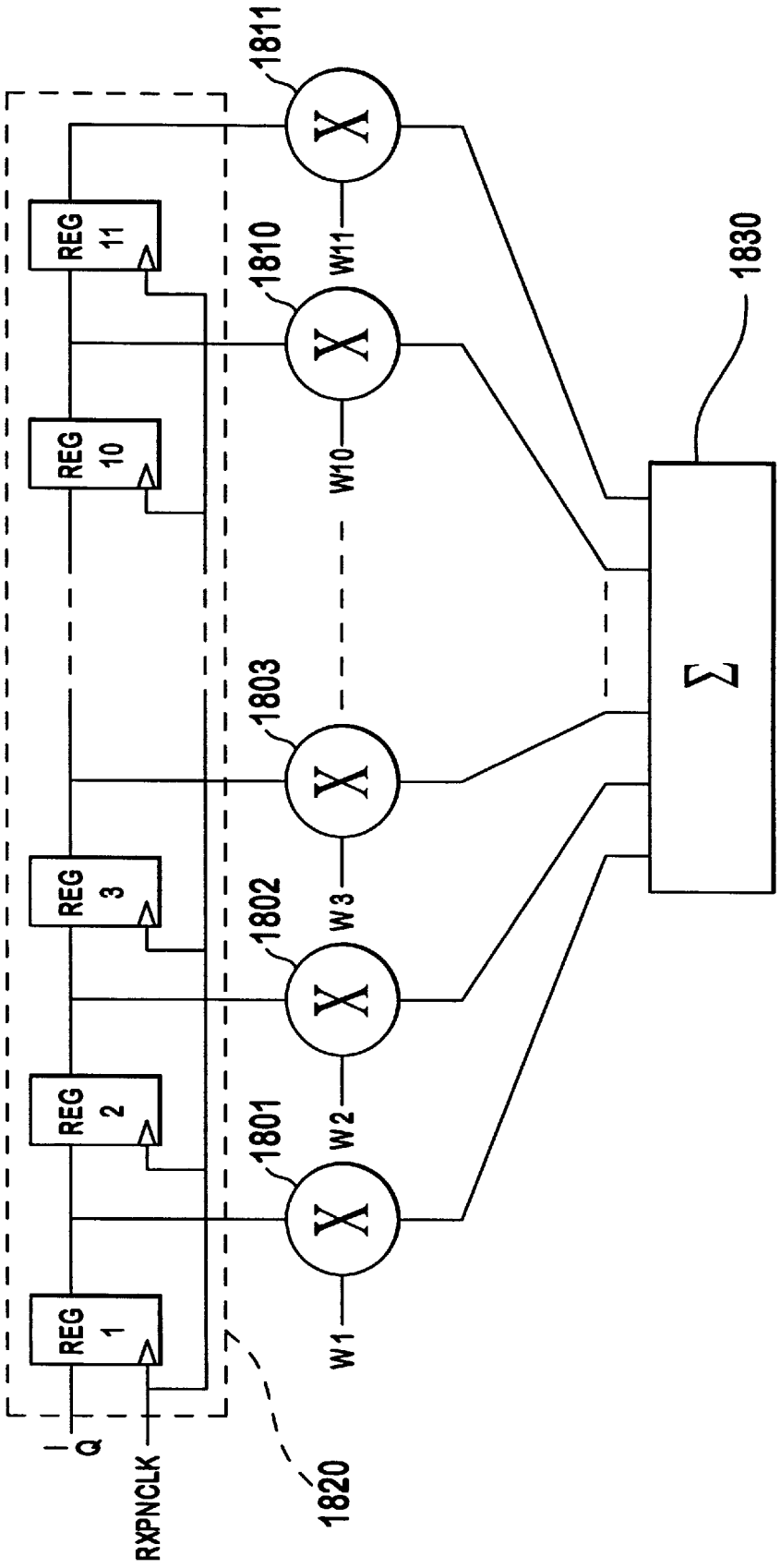
1811
1810
1803
1802
1801
1830
REG 11
REG 10
REG 3
REG 2
REG 1
W11
W10
W3
W2
W1
X
Σ
Q
RXPNCLK
1820

FIG. 18

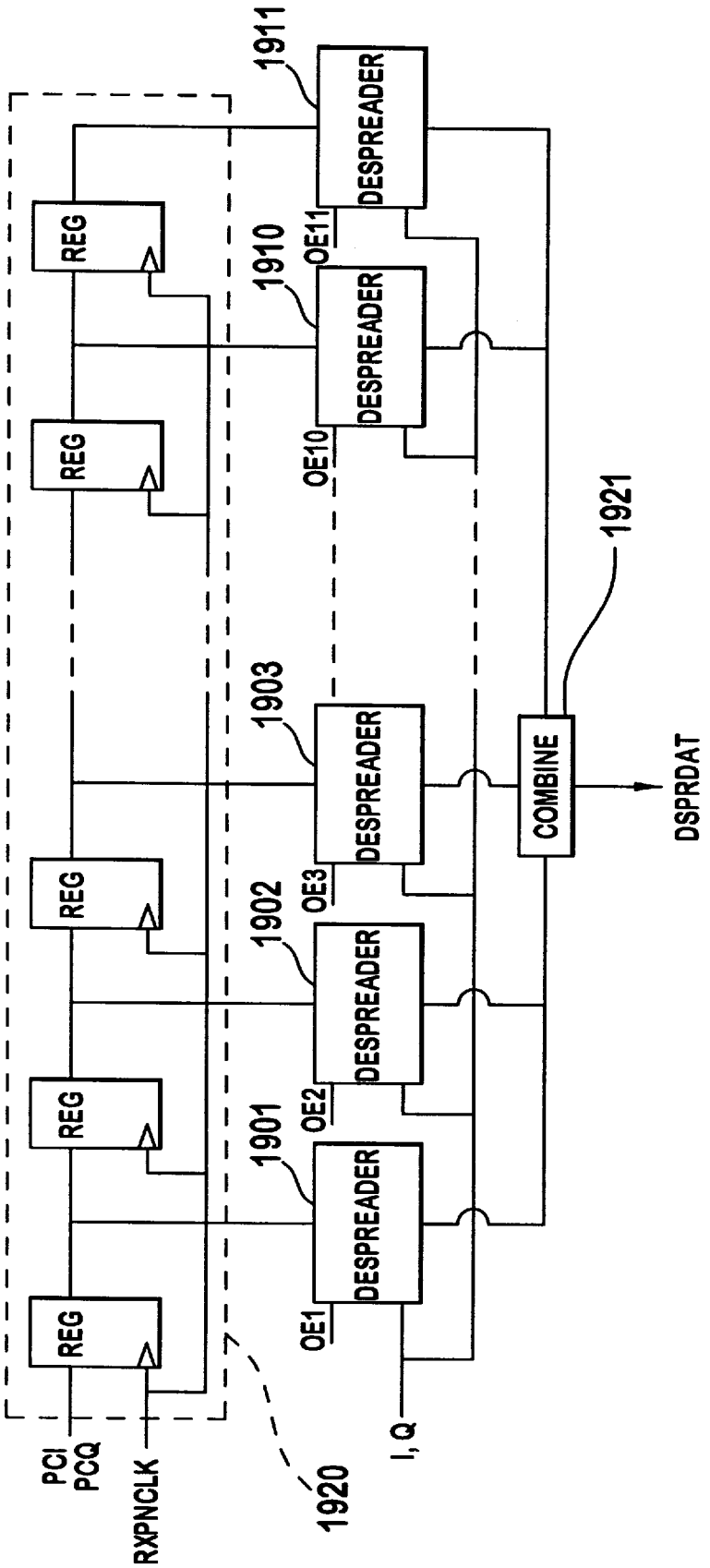
1911
DESPREADER
OE11
1910
DESPREADER
OE10
1921
1903
DESPREADER
OE3
COMBINE
DSPRDAT
1902
DESPREADER
OE2
1901
DESPREADER
OE1
REG
REG
REG
REG
REG
PCI
PCQ
RXPNCLK
1920
I, Q

FIG. 19

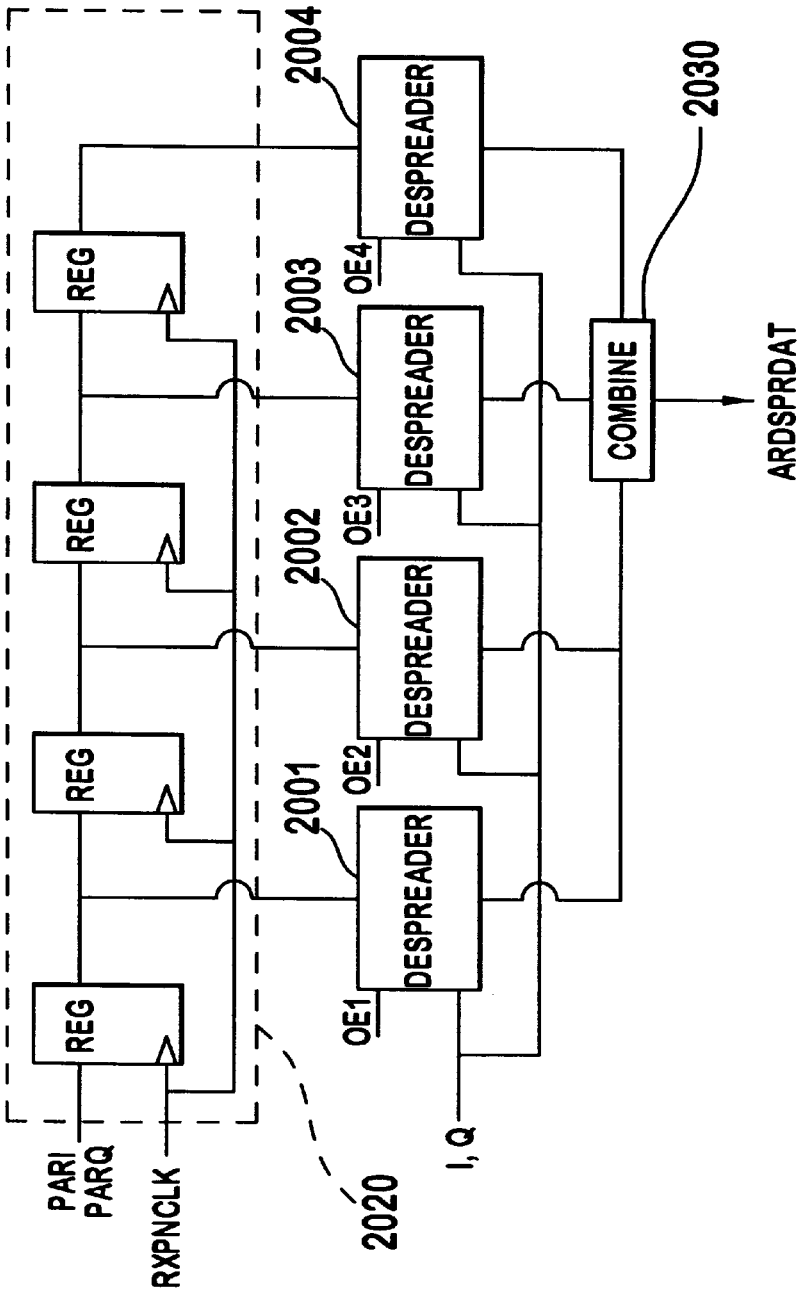
2004
DESPREADER
2030
REG
2003
OE4
DESPREADER
COMBINE
ARDSPRDAT
REG
2002
OE3
DESPREADER
REG
2001
OE2
DESPREADER
REG
OE1
PARI
PARQ
RXPNCLK
2020
I, Q

FIG. 20

FIG. 21

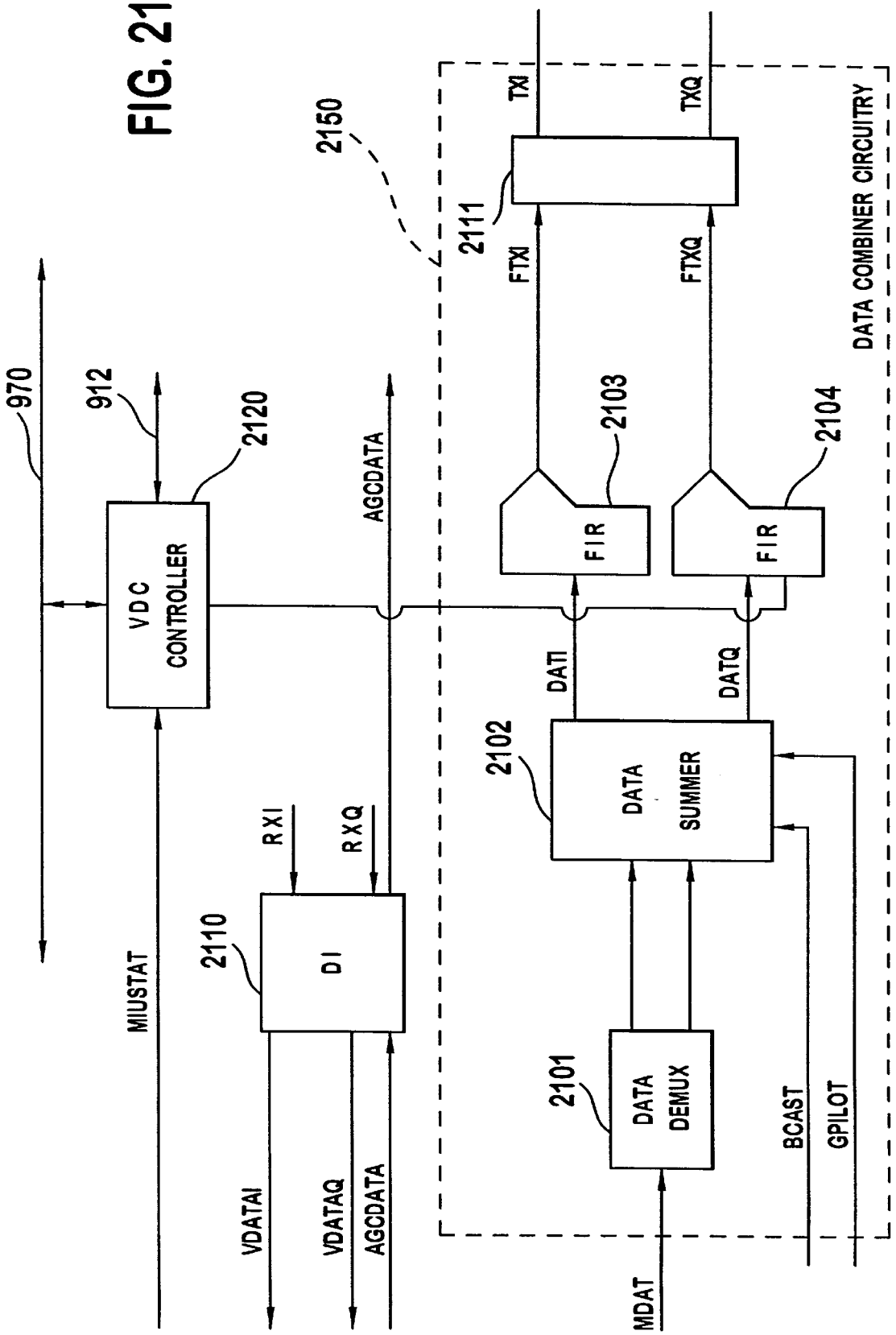
970
912
2120
VDC CONTROLLER
MIUSTAT
2150
DATA COMBINER CIRCUITRY
TXI
TXQ
2111
FTXI
FTXQ
2103
2104
FIR
FIR
AGCDATA
DATI
DATQ
2102
DATA SUMMER
RXI
RXQ
2110
DI
2101
DATA DEMUX
BCAST
GPILOT
VDATAI
VDATAQ
AGCDATA
MDAT

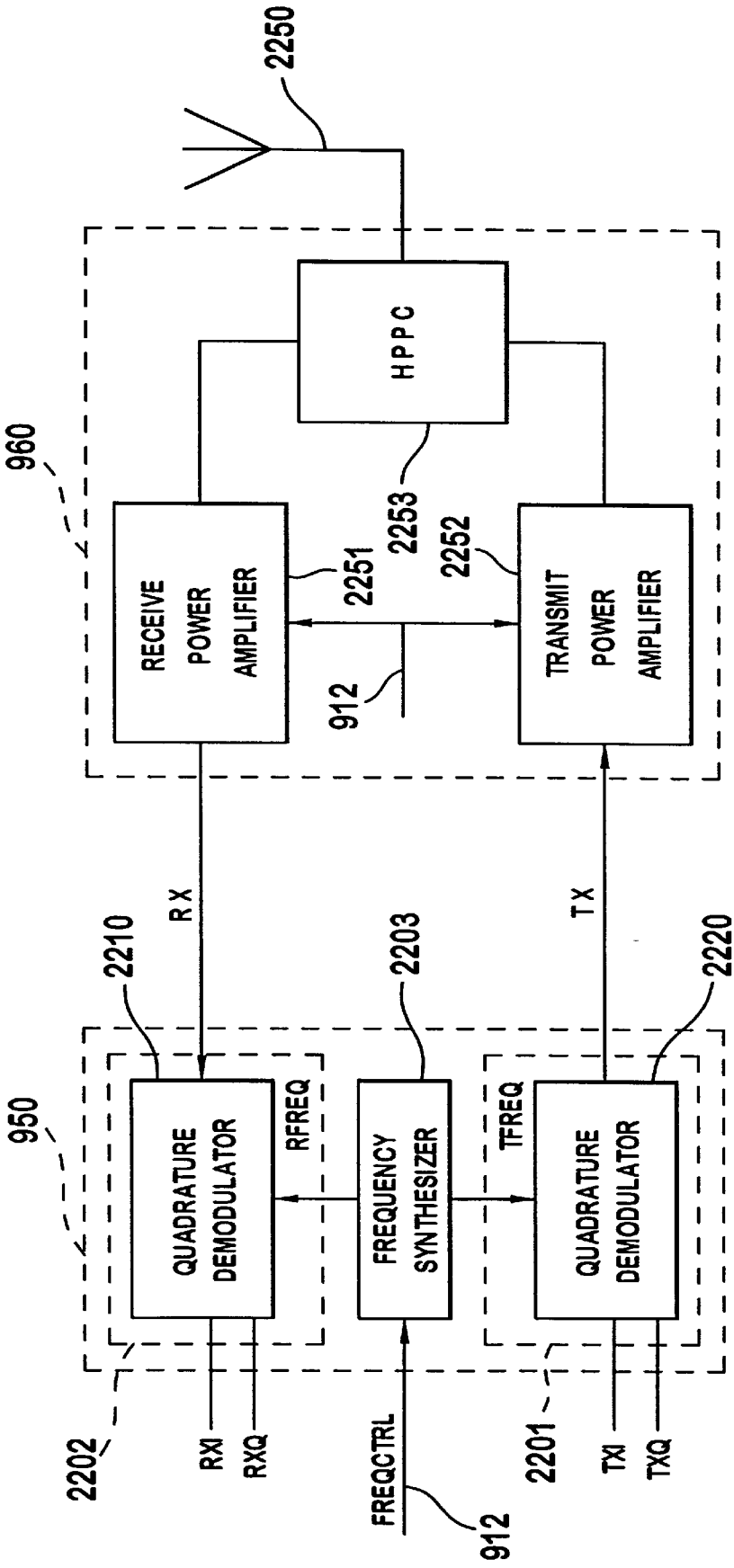
2250
960
HPPC
RECEIVE POWER AMPLIFIER
TRANSMIT POWER AMPLIFIER
2251
2252
2253
912
RX
TX
2210
2203
2220
950
QUADRATURE DEMODULATOR
FREQUENCY SYNTHESIZER
QUADRATURE DEMODULATOR
RFREQ
TFREQ
2202
2201
RXI
RXQ
TXI
TXQ
FREQCTRL
912

FIG. 22

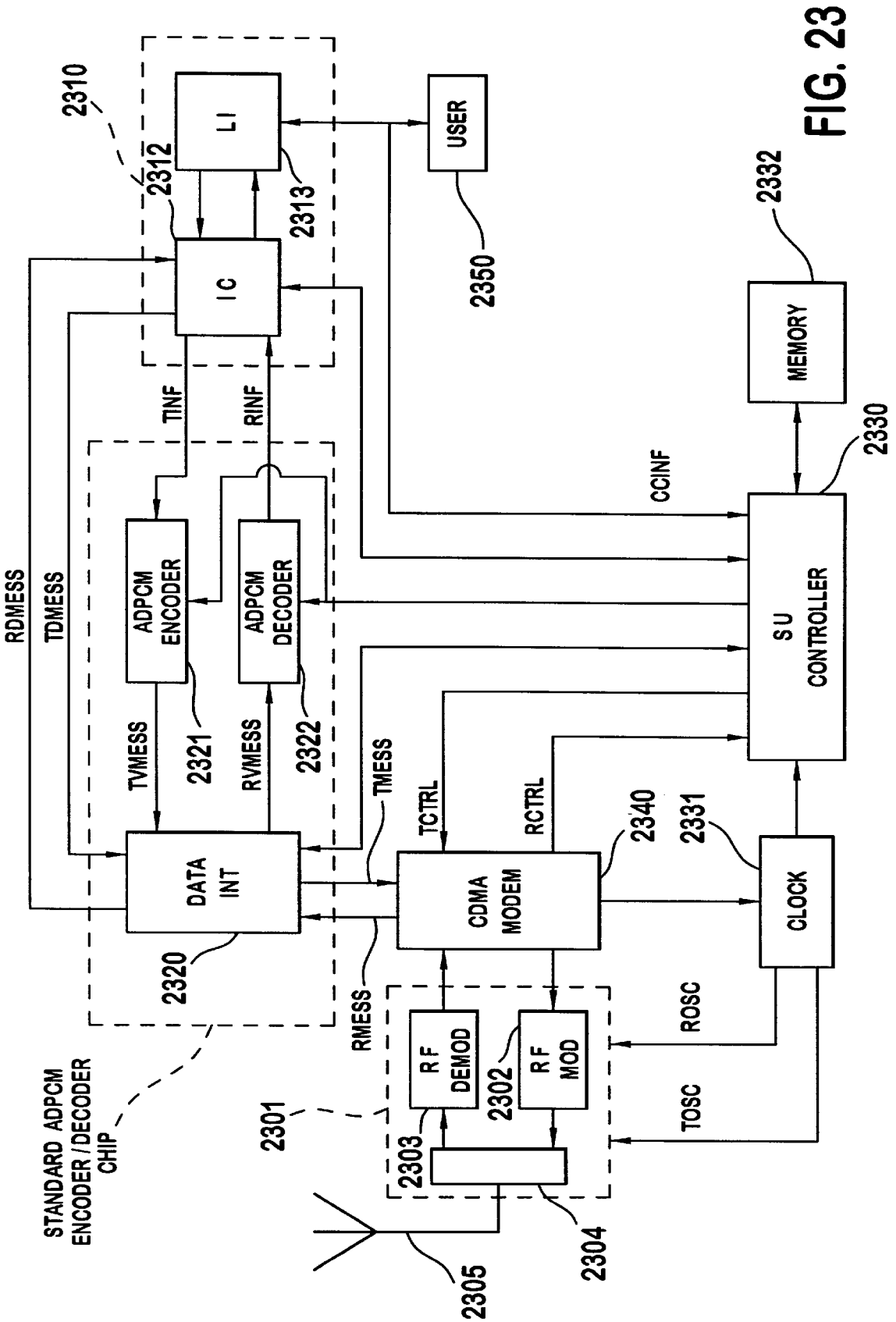
2310
LI
2312
2313
USER
2350
IC
2332
MEMORY
TINF
RINF
CCINF
2330
RDMESS
TDMESS
ADPCM ENCODER
ADPCM DECODER
SU CONTROLLER
TVMESS
2321
RVMESS
2322
TMESS
TCTRL
RCTRL
2340
2331
DATA INT
CDMA MODEM
CLOCK
2320
RMESS
ROSC
RF DEMOD
RF MOD
2302
TOSC
2301
2303
2304
STANDARD ADPCM ENCODER/DECODER CHIP
2305

FIG. 23

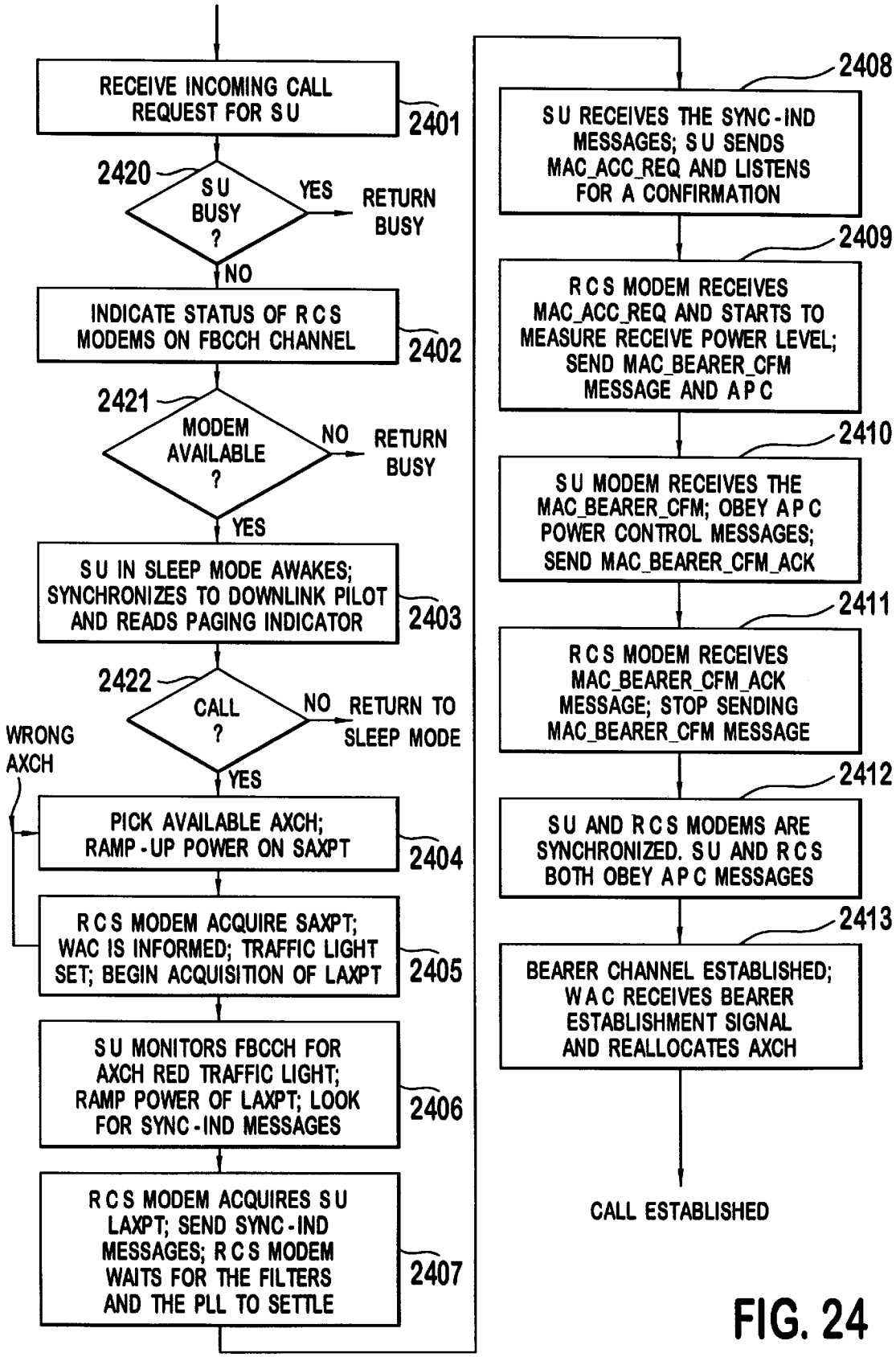
RECEIVE INCOMING CALL REQUEST FOR SU
2401
2420
SU BUSY ?
YES
RETURN BUSY
NO
INDICATE STATUS OF RCS MODEMS ON FBCCH CHANNEL
2402
2421
MODEM AVAILABLE ?
NO
RETURN BUSY
YES
SU IN SLEEP MODE AWAKES; SYNCHRONIZES TO DOWNLINK PILOT AND READS PAGING INDICATOR
2403
2422
CALL ?
NO
RETURN TO SLEEP MODE
WRONG AXCH
YES
PICK AVAILABLE AXCH; RAMP-UP POWER ON SAXPT
2404
RCS MODEM ACQUIRE SAXPT; WAC IS INFORMED; TRAFFIC LIGHT SET; BEGIN ACQUISITION OF LAXPT
2405
SU MONITORS FBCCH FOR AXCH RED TRAFFIC LIGHT; RAMP POWER OF LAXPT; LOOK FOR SYNC-IND MESSAGES
2406
RCS MODEM ACQUIRES SU LAXPT; SEND SYNC-IND MESSAGES; RCS MODEM WAITS FOR THE FILTERS AND THE PLL TO SETTLE
2407
2408
SU RECEIVES THE SYNC-IND MESSAGES; SU SENDS MAC_ACC_REQ AND LISTENS FOR A CONFIRMATION
2409
RCS MODEM RECEIVES MAC_ACC_REQ AND STARTS TO MEASURE RECEIVE POWER LEVEL; SEND MAC_BEARER_CFM MESSAGE AND APC
2410
SU MODEM RECEIVES THE MAC_BEARER_CFM; OBEY APC POWER CONTROL MESSAGES; SEND MAC_BEARER_CFM_ACK
2411
RCS MODEM RECEIVES MAC_BEARER_CFM_ACK MESSAGE; STOP SENDING MAC_BEARER_CFM MESSAGE
2412
SU AND RCS MODEMS ARE SYNCHRONIZED. SU AND RCS BOTH OBEY APC MESSAGES
2413
BEARER CHANNEL ESTABLISHED; WAC RECEIVES BEARER ESTABLISHMENT SIGNAL AND REALLOCATES AXCH
CALL ESTABLISHED

FIG. 24

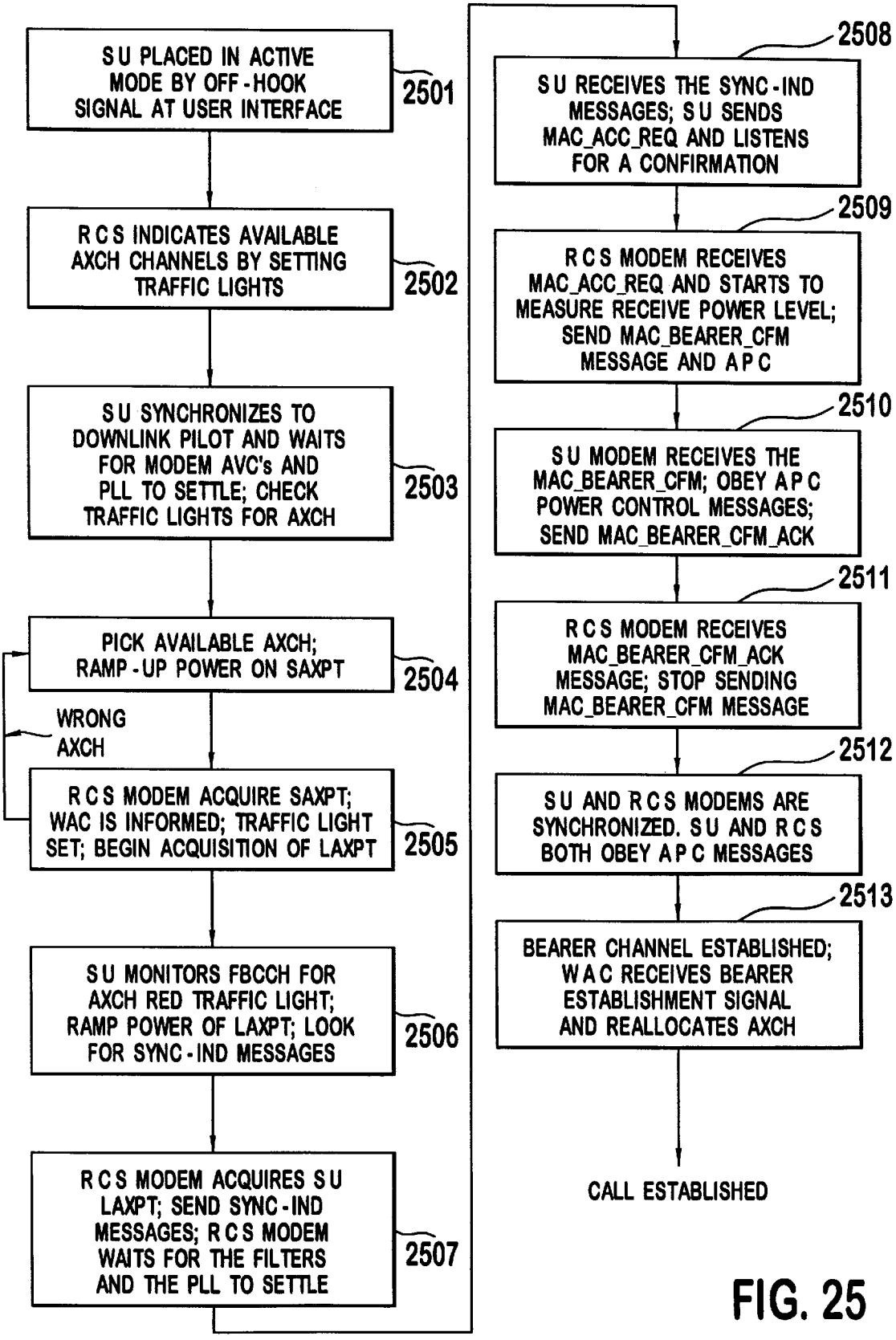
SU PLACED IN ACTIVE MODE BY OFF-HOOK SIGNAL AT USER INTERFACE
2501
RCS INDICATES AVAILABLE AXCH CHANNELS BY SETTING TRAFFIC LIGHTS
2502
SU SYNCHRONIZES TO DOWNLINK PILOT AND WAITS FOR MODEM AVC's AND PLL TO SETTLE; CHECK TRAFFIC LIGHTS FOR AXCH
2503
PICK AVAILABLE AXCH; RAMP-UP POWER ON SAXPT
2504
WRONG AXCH
RCS MODEM ACQUIRE SAXPT; WAC IS INFORMED; TRAFFIC LIGHT SET; BEGIN ACQUISITION OF LAXPT
2505
SU MONITORS FBCCH FOR AXCH RED TRAFFIC LIGHT; RAMP POWER OF LAXPT; LOOK FOR SYNC-IND MESSAGES
2506
RCS MODEM ACQUIRES SU LAXPT; SEND SYNC-IND MESSAGES; RCS MODEM WAITS FOR THE FILTERS AND THE PLL TO SETTLE
2507
2508
SU RECEIVES THE SYNC-IND MESSAGES; SU SENDS MAC_ACC_REQ AND LISTENS FOR A CONFIRMATION
2509
RCS MODEM RECEIVES MAC_ACC_REQ AND STARTS TO MEASURE RECEIVE POWER LEVEL; SEND MAC_BEARER_CFM MESSAGE AND APC
2510
SU MODEM RECEIVES THE MAC_BEARER_CFM; OBEY APC POWER CONTROL MESSAGES; SEND MAC_BEARER_CFM_ACK
2511
RCS MODEM RECEIVES MAC_BEARER_CFM_ACK MESSAGE; STOP SENDING MAC_BEARER_CFM MESSAGE
2512
SU AND RCS MODEMS ARE SYNCHRONIZED. SU AND RCS BOTH OBEY APC MESSAGES
2513
BEARER CHANNEL ESTABLISHED; WAC RECEIVES BEARER ESTABLISHMENT SIGNAL AND REALLOCATES AXCH
CALL ESTABLISHED

FIG. 25

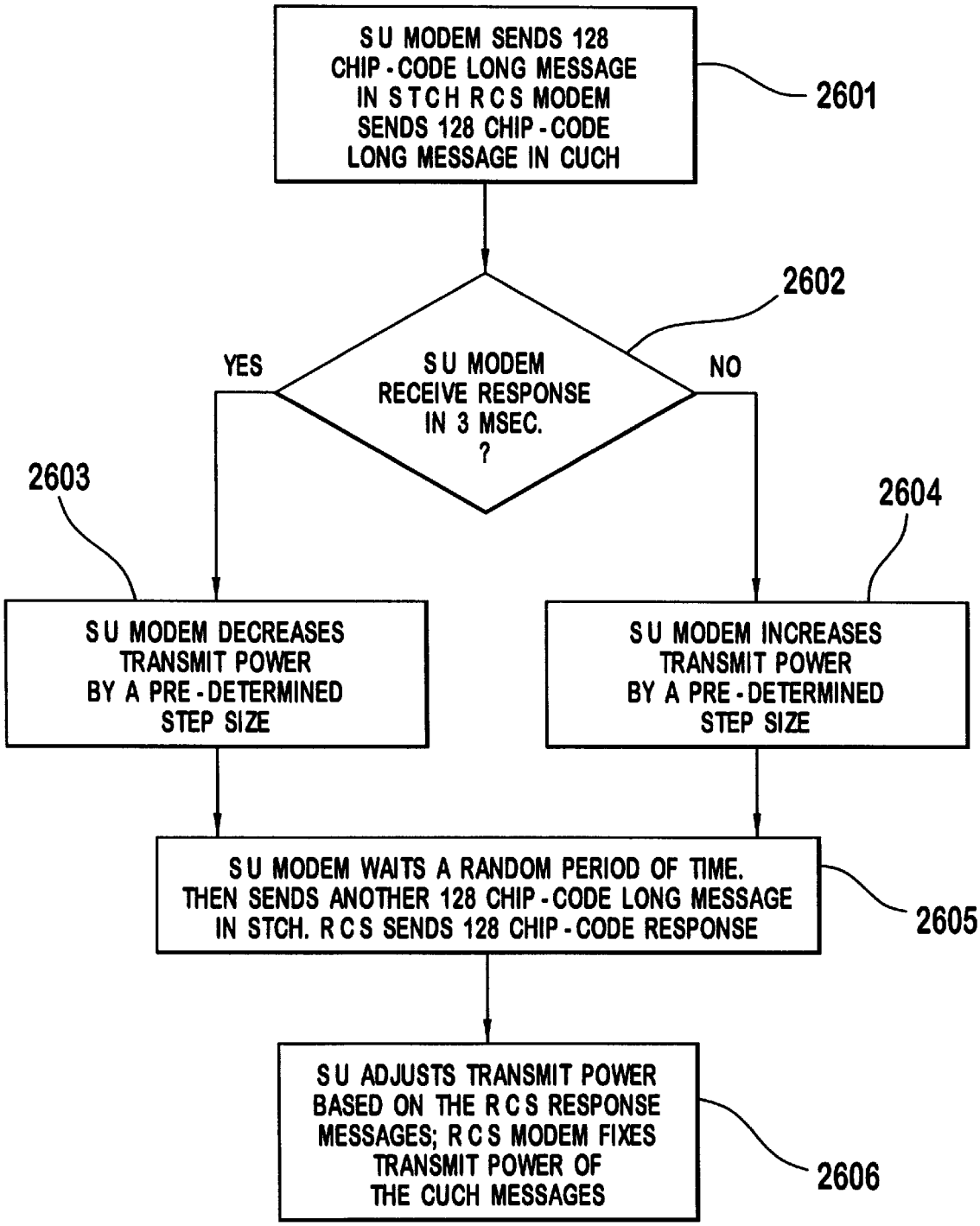
SU MODEM SENDS 128 CHIP-CODE LONG MESSAGE IN STCH RCS MODEM SENDS 128 CHIP-CODE LONG MESSAGE IN CUCH
2601
2602
SU MODEM RECEIVE RESPONSE IN 3 MSEC. ?
YES
NO
2603
2604
SU MODEM DECREASES TRANSMIT POWER BY A PRE-DETERMINED STEP SIZE
SU MODEM INCREASES TRANSMIT POWER BY A PRE-DETERMINED STEP SIZE
SU MODEM WAITS A RANDOM PERIOD OF TIME. THEN SENDS ANOTHER 128 CHIP-CODE LONG MESSAGE IN STCH. RCS SENDS 128 CHIP-CODE RESPONSE
2605
SU ADJUSTS TRANSMIT POWER BASED ON THE RCS RESPONSE MESSAGES; RCS MODEM FIXES TRANSMIT POWER OF THE CUCH MESSAGES
2606

FIG. 26

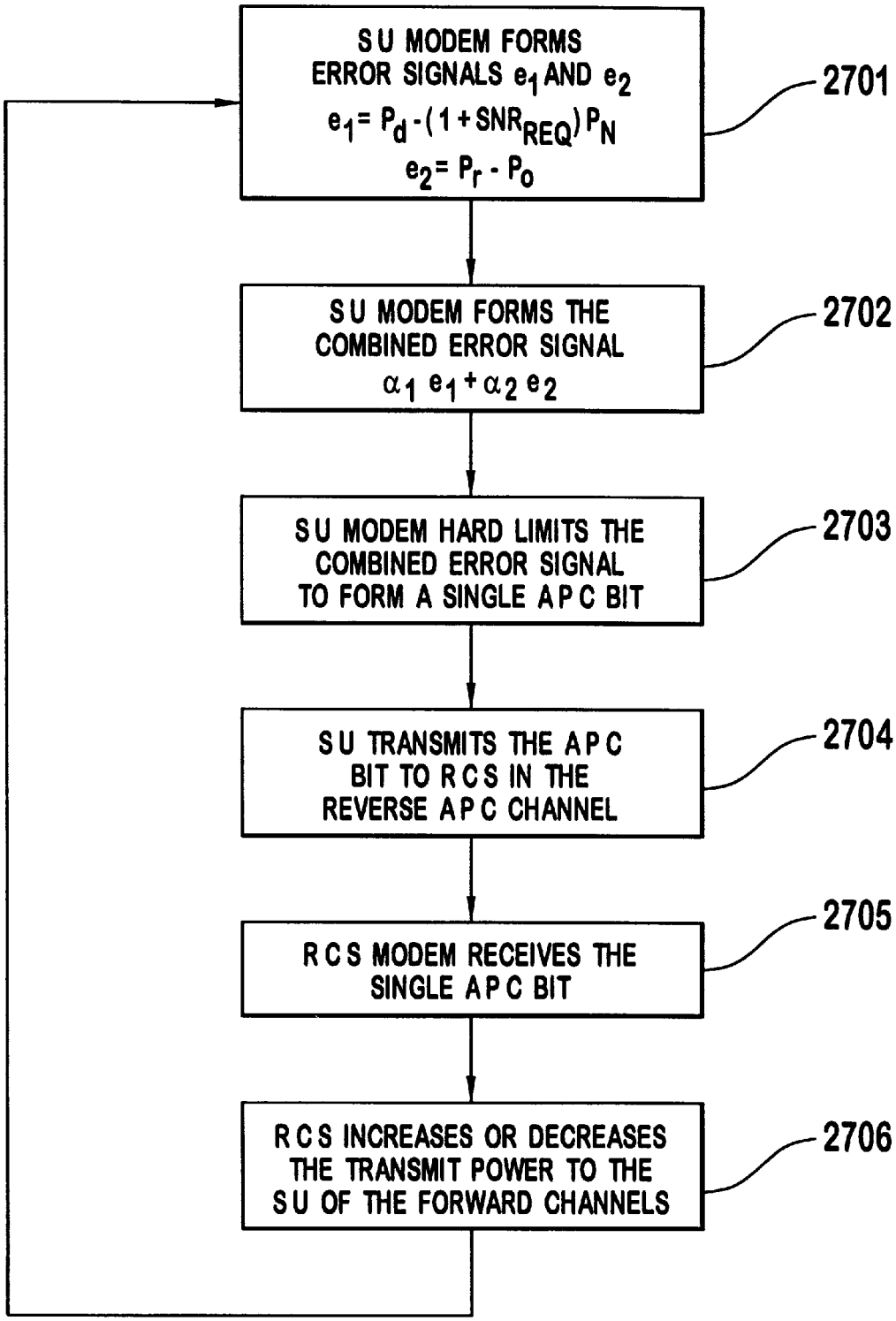
SU MODEM FORMS ERROR SIGNALS e_1 AND e_2
$e_1 = P_d - (1 + SNR_{REQ}) P_N$
$e_2 = P_r - P_o$
2701
SU MODEM FORMS THE COMBINED ERROR SIGNAL
$\alpha_1 e_1 + \alpha_2 e_2$
2702
SU MODEM HARD LIMITS THE COMBINED ERROR SIGNAL TO FORM A SINGLE APC BIT
2703
SU TRANSMITS THE APC BIT TO RCS IN THE REVERSE APC CHANNEL
2704
RCS MODEM RECEIVES THE SINGLE APC BIT
2705
RCS INCREASES OR DECREASES THE TRANSMIT POWER TO THE SU OF THE FORWARD CHANNELS
2706

FIG. 27

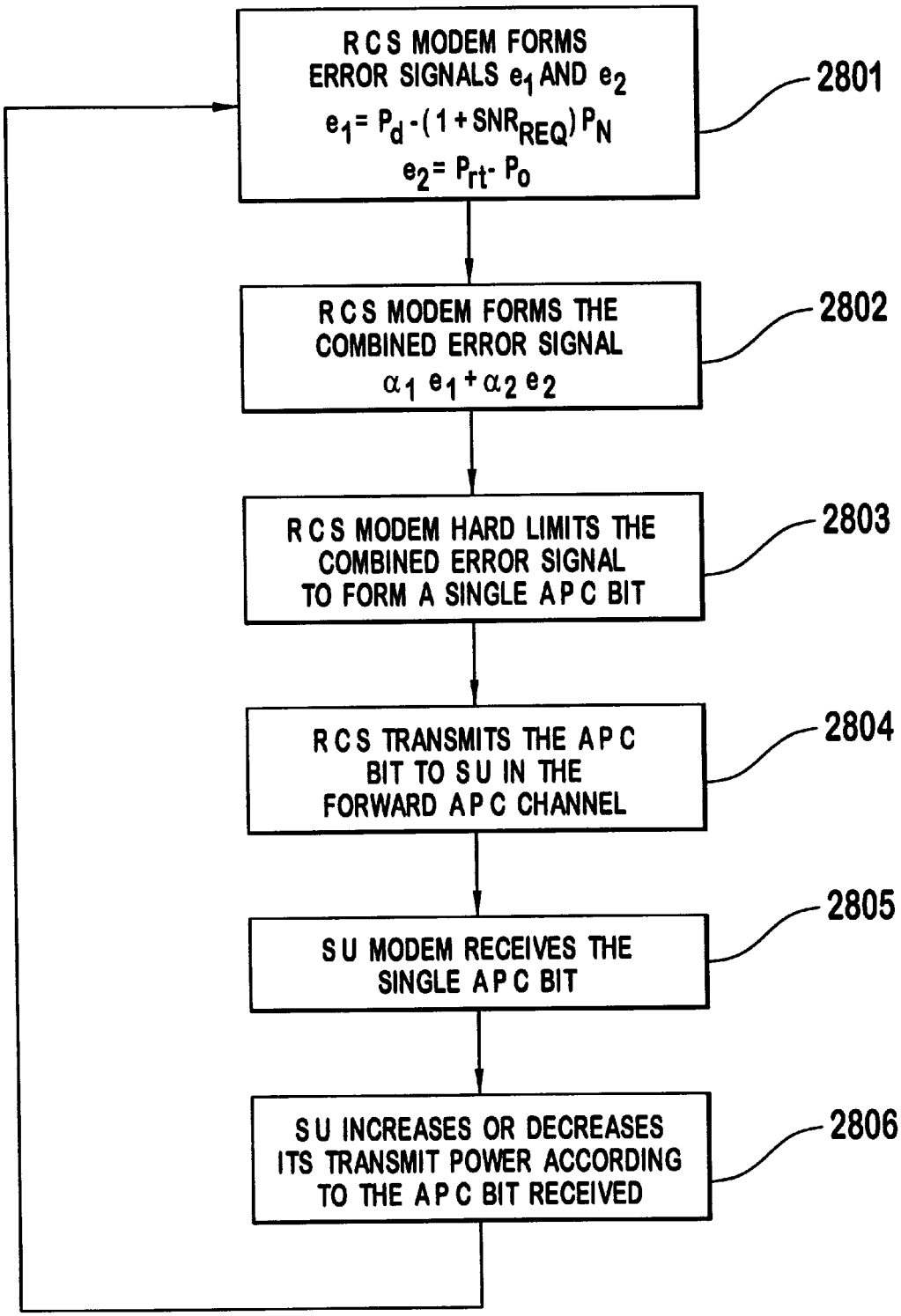
RCS MODEM FORMS ERROR SIGNALS e_1 AND e_2
$e_1 = P_d - (1 + SNR_{REQ}) P_N$
$e_2 = P_{rt} - P_o$
2801
RCS MODEM FORMS THE COMBINED ERROR SIGNAL
$\alpha_1 e_1 + \alpha_2 e_2$
2802
RCS MODEM HARD LIMITS THE COMBINED ERROR SIGNAL TO FORM A SINGLE APC BIT
2803
RCS TRANSMITS THE APC BIT TO SU IN THE FORWARD APC CHANNEL
2804
SU MODEM RECEIVES THE SINGLE APC BIT
2805
SU INCREASES OR DECREASES ITS TRANSMIT POWER ACCORDING TO THE APC BIT RECEIVED
2806

FIG. 28

FIG. 29A

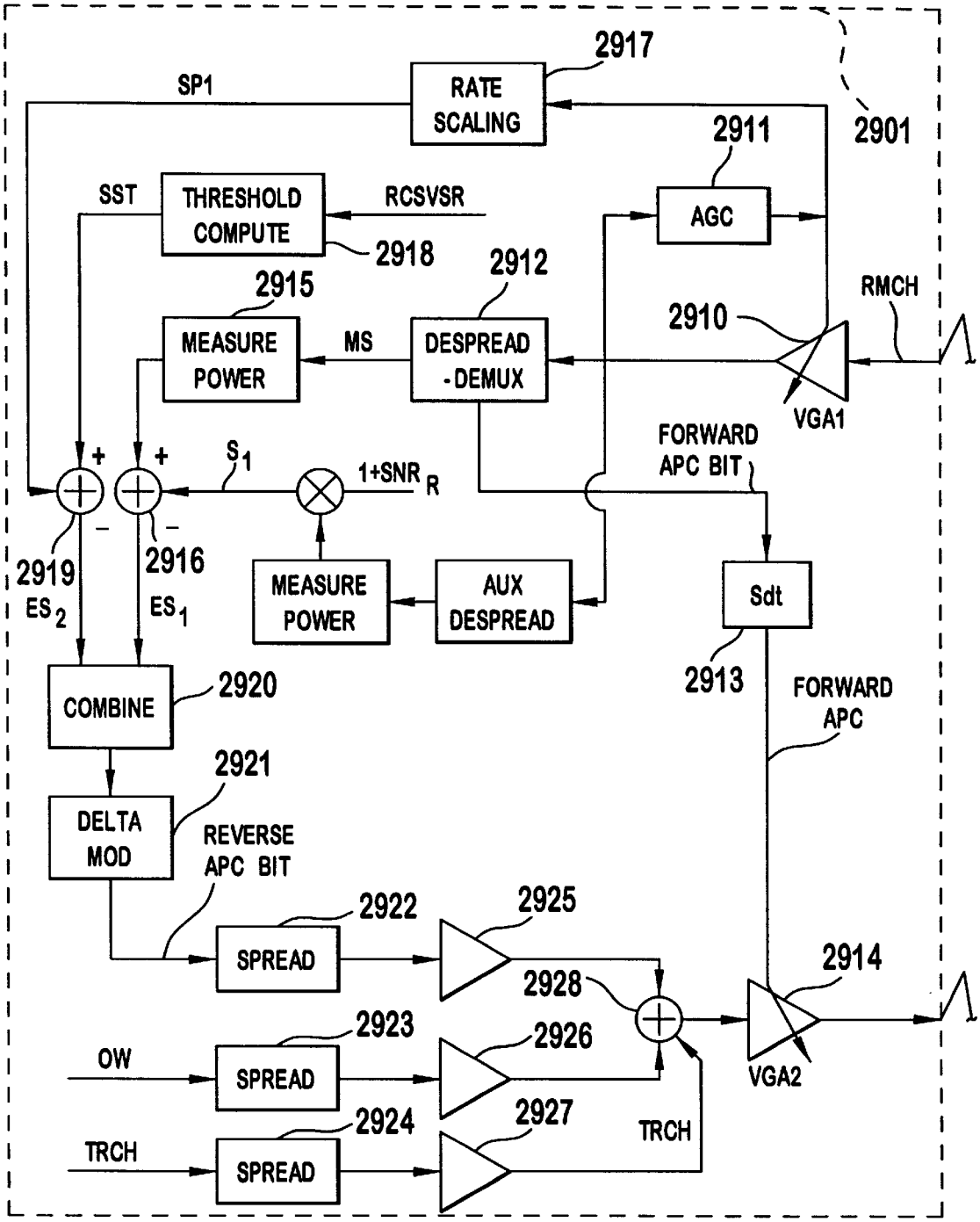
2917
SP1
RATE SCALING
2901
2911
SST
THRESHOLD COMPUTE
RCSVSR
AGC
2918
2912
2915
RMCH
2910
MEASURE POWER
MS
DESPREAD -DEMUX
VGA1
FORWARD APC BIT
+
+
S1
1+SNR R
2919
ES2
2916
ES1
MEASURE POWER
AUX DESPREAD
Sdt
2913
COMBINE
2920
FORWARD APC
2921
DELTA MOD
REVERSE APC BIT
2922
2925
SPREAD
2928
2914
2923
2926
OW
SPREAD
VGA2
2924
2927
TRCH
TRCH
SPREAD

FIG. 29B

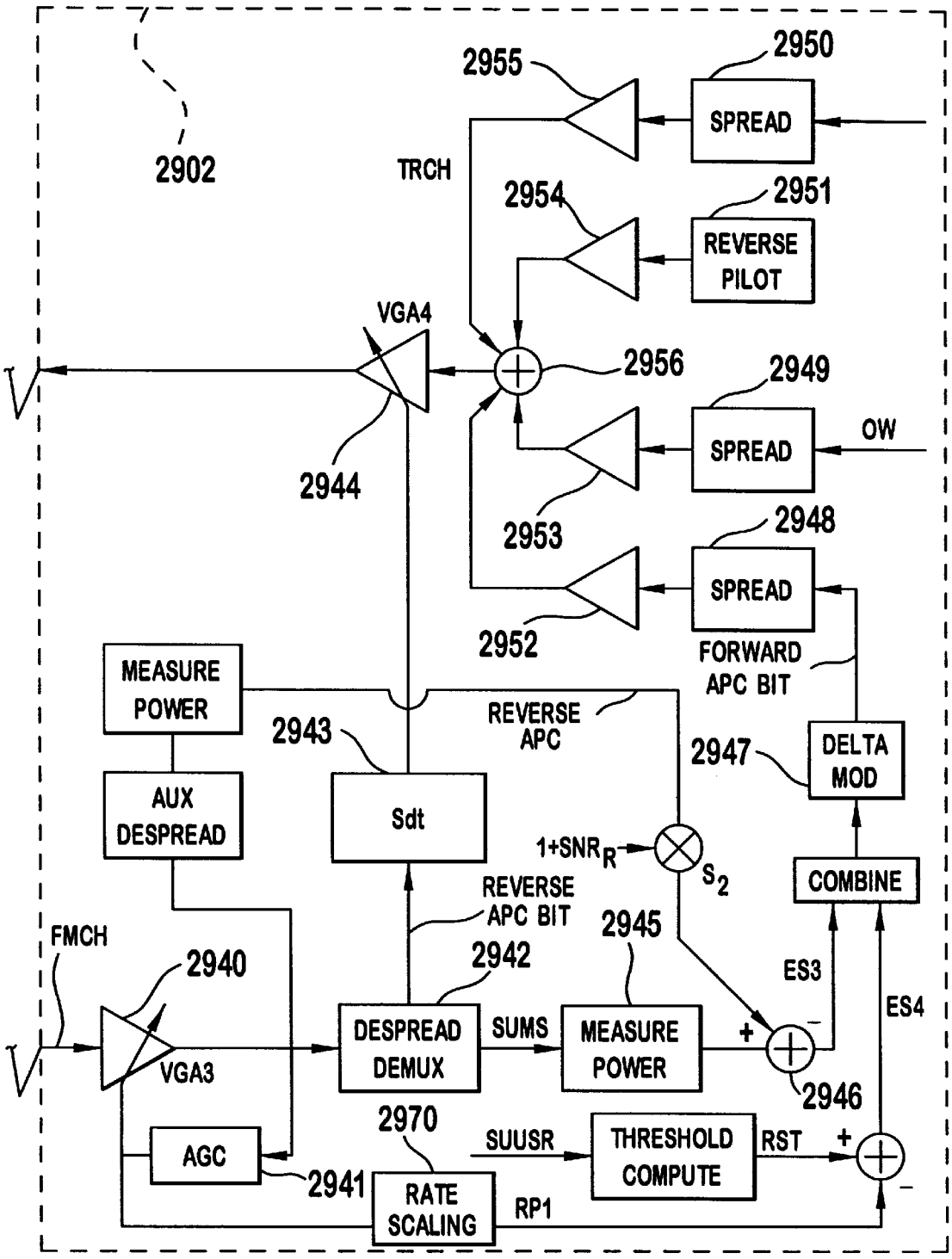
2902
2955
2950
SPREAD
TRCH
2954
2951
REVERSE PILOT
VGA4
2956
2949
SPREAD
OW
2944
2953
2948
SPREAD
2952
FORWARD APC BIT
MEASURE POWER
REVERSE APC
2943
2947
DELTA MOD
AUX DESPREAD
Sdt
1+SNR$_R$
S_2
COMBINE
REVERSE APC BIT
2945
FMCH
2940
2942
ES3
ES4
DESPREAD DEMUX
SUMS
MEASURE POWER
VGA3
2946
2970
AGC
SUUSR
THRESHOLD COMPUTE
RST
2941
RATE SCALING
RP1

FIG. 30A

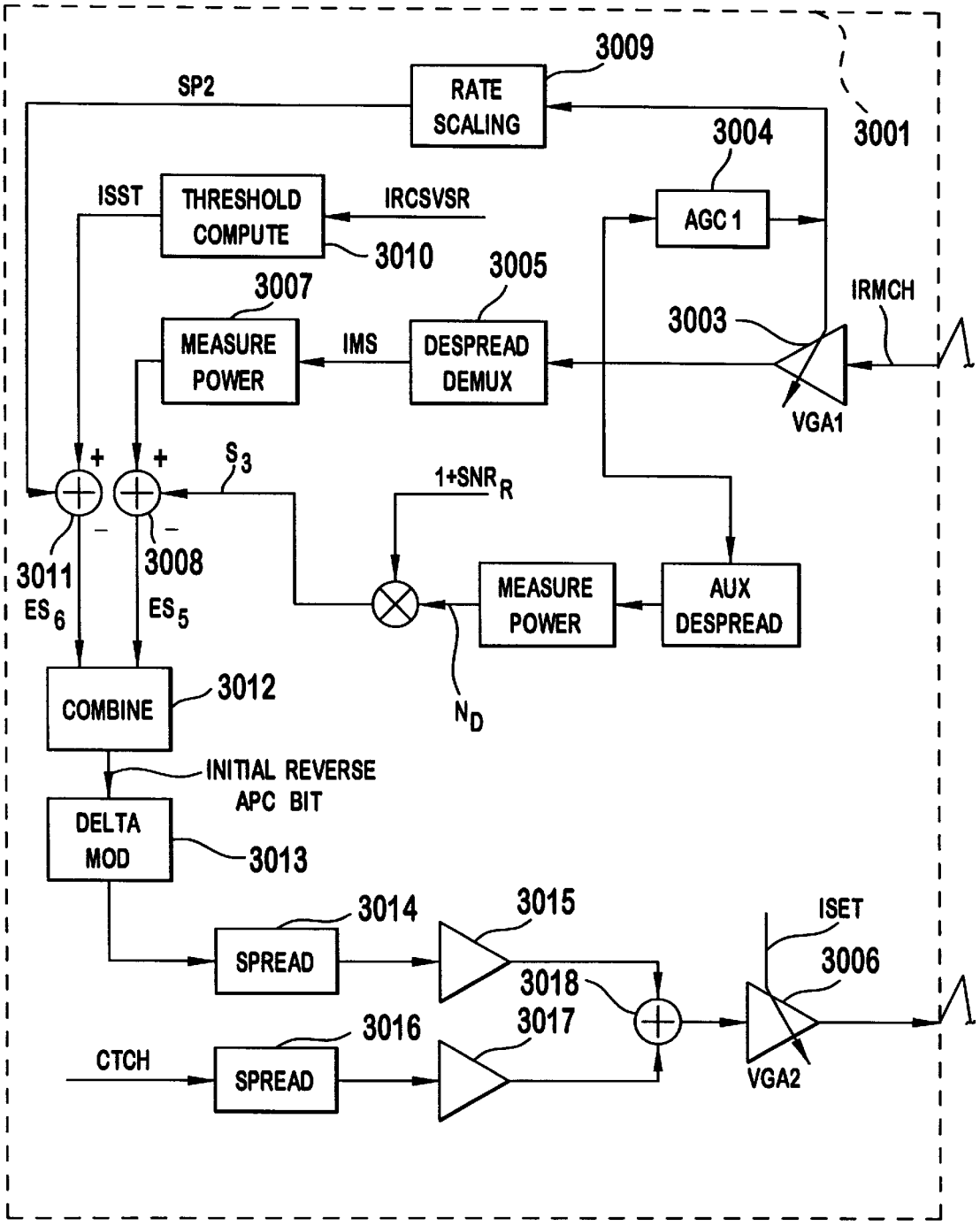
3009
SP2
RATE SCALING
3001
3004
ISST
THRESHOLD COMPUTE
IRCSVSR
AGC 1
3010
3005
3007
IRMCH
3003
MEASURE POWER
IMS
DESPREAD DEMUX
VGA1
+
+
S3
1+SNRR
3011
ES6
3008
ES5
MEASURE POWER
AUX DESPREAD
ND
COMBINE
3012
INITIAL REVERSE APC BIT
DELTA MOD
3013
3014
3015
ISET
SPREAD
3018
3006
3016
3017
CTCH
SPREAD
VGA2

FIG. 30B

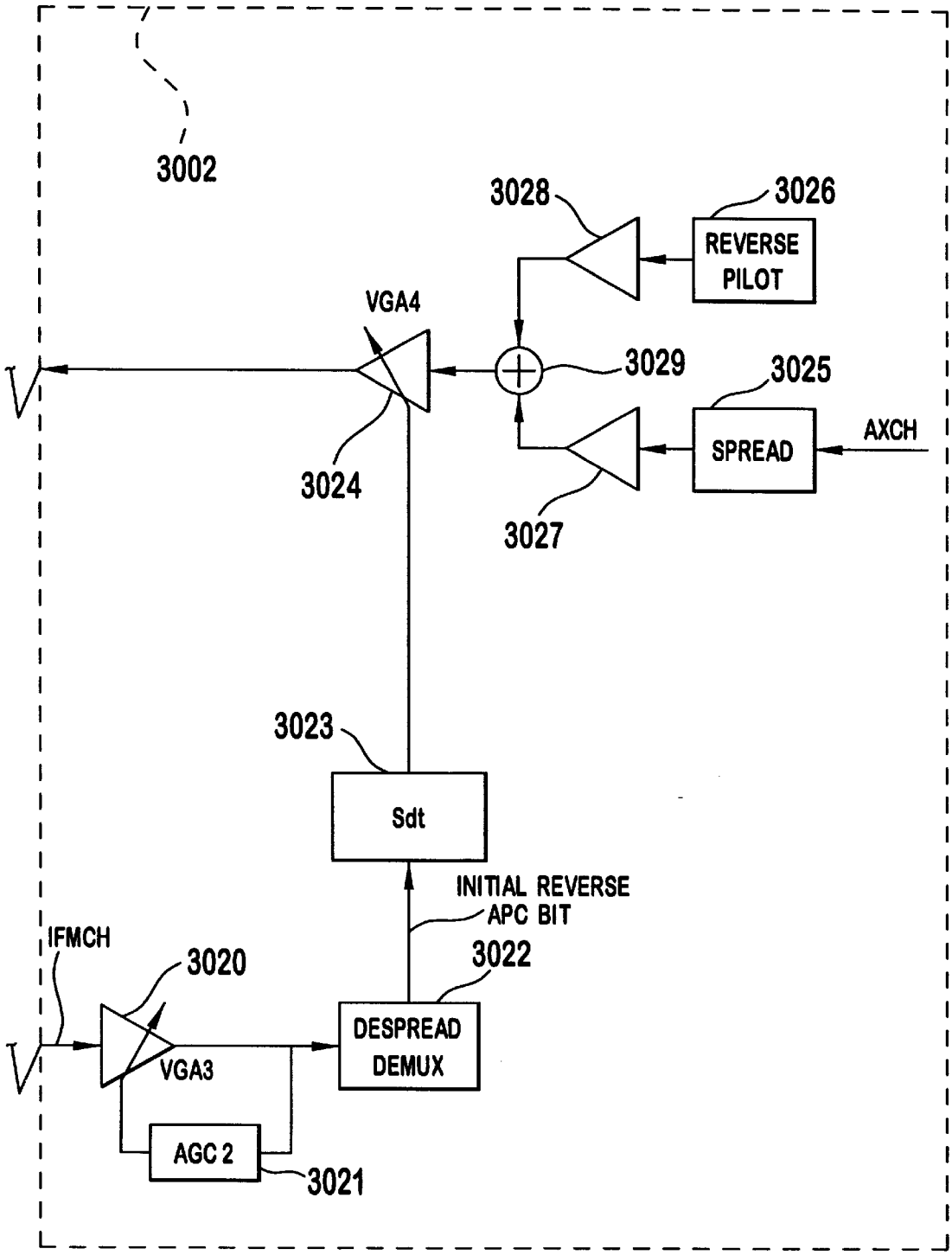
3002
3028
3026
REVERSE PILOT
VGA4
3029
3025
SPREAD
AXCH
3024
3027
3023
Sdt
INITIAL REVERSE APC BIT
IFMCH
3020
3022
DESPREAD DEMUX
VGA3
AGC 2
3021

BEARER CHANNEL MODIFICATION SYSTEM FOR A CODE DIVISION MULTIPLE ACCESS (CDMA) COMMUNICATION SYSTEM

This application is a division of application Ser. No. 08/669,775, filed Jun. 27, 1996, now U.S. Pat. No. 5,799,010.

This application claims the benefit of U.S. Provisional Application Ser. No. 60/000,775 filed Jun. 30, 1995.

BACKGROUND OF THE INVENTION

The present invention generally pertains to Code Division Multiple Access (CDMA) communications, also known as spread-spectrum communications. More particularly, the present invention pertains to a system and method for providing a high capacity, CDMA communications system which provides for one or more simultaneous user bearer channels over a given radio frequency, allowing dynamic allocation of bearer channel rate while rejecting multipath interference.

DESCRIPTION OF THE RELEVANT ART

Providing quality telecommunication services to user groups which are classified as remote, such as rural telephone systems and telephone systems in underdeveloped countries, has proved to be a challenge in recent years. These needs have been partially satisfied by wireless radio services, such as fixed or mobile frequency division multiplex (FDM), frequency division multiple access (FDMA), time division multiplex (TDM), time division multiple access (TDMA) systems, combination frequency and time division systems (FD/TDMA), and other land mobile radio systems. Usually, these remote services are faced with more potential users than can be supported simultaneously by their frequency or spectral bandwidth capacity.

Recognizing these limitations, recent advances in wireless communications have used spread spectrum modulation techniques to provide simultaneous communication by multiple users. Spread spectrum modulation refers to modulating a information signal with a spreading code signal; the spreading code signal being generated by a code generator where the period Tc of the spreading code is substantially less than the period of the information data bit or symbol signal. The code may modulate the carrier frequency upon which the information has been sent, called frequency-hopped spreading, or may directly modulate the signal by multiplying the spreading code with the information data signal, called direct-sequence spreading (DS). Spread-spectrum modulation produces a signal with bandwidth substantially greater than that required to transmit the information signal. Synchronous reception and despreading of the signal at the receiver recovers the original information. A synchronous demodulator in the receiver uses a reference signal to synchronize the despreading circuits to the input spread-spectrum modulated signal to recover the carrier and information signals. The reference signal can be a spreading code which is not modulated by an information signal. Such use of a synchronous spread-spectrum modulation and demodulation for wireless communication is described in U.S. Pat. No. 5,228,056 entitled SYNCHRONOUS SPREAD-SPECTRUM COMMUNICATIONS SYSTEM AND METHOD by Donald L. Schilling, which techniques are incorporated herein by reference.

Spread-spectrum modulation in wireless networks offers many advantages because multiple users may use the same

frequency band with minimal interference to each user's receiver. Spread-spectrum modulation also reduces effects from other sources of interference. In addition, synchronous spread-spectrum modulation and demodulation techniques may be expanded by providing multiple message channels for a single user, each spread with a different spreading code, while still transmitting only a single reference signal to the user. Such use of multiple message channels modulated by a family of spreading codes synchronized to a pilot spreading code for wireless communication is described in U.S. Pat. No. 5,166,951 entitled HIGH CAPACITY SPREAD-SPECTRUM CHANNEL by Donald L. Schilling, which is incorporated herein by reference.

One area in which spread-spectrum techniques are used is in the field of mobile cellular communications to provide personal communication services (PCS). Such systems desirably support large numbers of users, control Doppler shift and fade, and provide high speed digital data signals with low bit error rates. These systems employ a family of orthogonal or quasi-orthogonal spreading codes, with a pilot spreading code sequence synchronized to the family of codes. Each user is assigned one of the spreading codes as a spreading function. Related problems of such a system are: supporting a large number of users with the orthogonal codes, handling reduced power available to remote units,-and handling multipath fading effects. Solutions to such problems include using phased-array antennas to generate multiple steerable beams, using very long orthogonal or quasi-orthogonal code sequences. These sequences may be reused by cyclic shifting of the code synchronized to a central reference, and diversity combining of multipath signals. Such problems associated with spread spectrum communications, and methods to increase capacity of a multiple access, spread-spectrum system are described in U.S. Pat. No. 4,901,307 entitled SPREAD SPECTRUM MULTIPLE ACCESS COMMUNICATION SYSTEM USING SATELLITE OR TERRESTRIAL REPEATERS by Gilhousen et al. which is incorporated herein by reference.

The problems associated with the prior art systems focus around reliable reception and synchronization of the receiver despreading circuits to the received signal. The presence of multipath fading introduces a particular problem with spread spectrum receivers in that a receiver must somehow track the multipath components to maintain code-phase lock of the receiver's despreading means with the input signal. Prior art receivers generally track only one or two of the multipath signals, but this method is not satisfactory because the combined group of low power multipath signal components may actually contain far more power than the one or two strongest multipath components. The prior art receivers track and combine the strongest components to maintain a predetermined Bit Error Rate (BER) of the receiver. Such a receiver is described, for example, in U.S. Pat. No. 5,109,390 entitled DIVERSITY RECEIVER IN A CDMA CELLULAR TELEPHONE SYSTEM by Gilhousen et al. A receiver that combines all multipath components, however, is able to maintain the desired BER with a signal power that is lower than that of prior art systems because more signal power is available to the receiver. Consequently, there is a need for a spread spectrum communication system employing a receiver that tracks substantially all of the multipath signal components, so that substantially all multipath signals may be combined in the receiver, and hence the required transmit power of the signal for a given BER may be reduced.

Another problem associated with multiple access, spread-spectrum communication systems is the need to reduce the

total transmitted power of users in the system, since users may have limited available power. An associated problem requiring power control in spread-spectrum systems is related to the inherent characteristic of spread-spectrum systems that one user's spread-spectrum signal is received by another user's receiver as noise with a certain power level. Consequently, users transmitting with high levels of signal power may interfere with other users' reception. Also, if a user moves relative to another user's geographic location, signal fading and distortion require that the users adjust their transmit power level to maintain a particular signal quality. At the same time, the system should keep the power that the base station receives from all users relatively constant. Finally, because it is possible for the spread-spectrum system to have more remote users than can be supported simultaneously, the power control system should also employ a capacity management method which rejects additional users when the maximum system power level is reached.

Prior spread-spectrum systems have employed a base station that measures a received signal and sends an adaptive power control (APC) signal to the remote users. Remote users include a transmitter with an automatic gain control (AGC) circuit which responds to the APC signal. In such systems the base station monitors the overall system power or the power received from each user, and sets the APC signal accordingly. Such a spread-spectrum power control system and method is described in U.S. Pat. No. 5,299,226 entitled ADAPTIVE POWER CONTROL FOR A SPREAD SPECTRUM COMMUNICATION SYSTEM AND METHOD, and U.S. Pat. No. 5,093,840 entitled ADAPTIVE POWER CONTROL FOR A SPREAD SPECTRUM TRANSMITTER, both by Donald L. Schilling and incorporated herein by reference. This open loop system performance may be improved by including a measurement of the signal power received by the remote user from the base station, and transmitting an APC signal back to the base station to effectuate a closed loop power control method. Such closed loop power control is described, for example, in U.S. Pat. No. 5,107,225 entitled HIGH DYNAMIC RANGE CLOSED LOOP AUTOMATIC GAIN CONTROL CIRCUIT to Charles E. Wheatley, III et al. and incorporated herein by reference.

These power control systems, however, exhibit several disadvantages. First, the base station must perform complex power control algorithms, increasing the amount of processing in the base station. Second, the system actually experiences several types of power variation: variation in the noise power caused by the variation in the number of users and variations in the received signal power of a particular bearer channel. These variations occur with different frequency, so simple power control algorithms can be optimized to compensate for only one of the two types of variation. Finally, these power algorithms tend to drive the overall system power to a relatively high level. Consequently, there is a need for a spread-spectrum power control method that rapidly responds to changes in bearer channel power levels, while simultaneously making adjustments to all users' transmit power in response to changes in the number of users. Also, there is a need for an improved spread-spectrum communication system employing a closed loop power control system which minimizes the system's overall power requirements while maintaining a sufficient BER at the individual remote receivers. In addition, such a system should control the initial transmit power level of a remote user and manage total system capacity.

Spread-spectrum communication systems desirably should support large numbers of users, each of which has at least one communication channel. In addition, such a system should provide multiple generic information channels to broadcast information to all users and to enable users to gain access to the system. Using prior art spread-spectrum systems this could only be accomplished by generating large numbers of spreading code sequences.

Further, spread-spectrum systems should use sequences that are orthogonal or nearly orthogonal to reduce the probability that a receiver locks to the wrong spreading code sequence or phase. The use of such orthogonal codes and the benefits arising therefrom are outlined in U.S. Pat. No. 5,103,459 entitled SYSTEM AND METHOD FOR GENERATING SIGNAL WAVEFORMS IN A CDMA CELLULAR TELEPHONE SYSTEM, by Gilhousen et al. and U.S. Pat. No. 5,193,094 entitled METHOD AND APPARATUS FOR GENERATING SUPER-ORTHOGONAL CONVOLUTIONAL CODES AND THE DECODING THEREOF, by Andrew J. Viterbi, both of which are incorporated herein by reference. However, generating such large families of code sequences with such properties is difficult. Also, generating large code families requires generating sequences which have a long period before repetition- Consequently, the time a receiver takes to achieve synchronization with such a long sequence is increased. Prior art spreading code generators often combine shorter sequences to make longer sequences, but such sequences may no longer be sufficiently orthogonal. Therefore, there is a need for an improved method for reliably generating large families of code sequences that exhibit nearly orthogonal characteristics and have a long period before repetition, but also include the benefit of a short code sequence that reduces the time to acquire and lock the receiver to the correct code phase. In addition, the code generation method should allow generation of codes with any period, since the spreading code period is often determined by parameters used such as data rate or frame size.

Another desirable characteristic of spreading code sequences is that the transition of the user data value occur at a transition of the code sequence values. Since data typically has a period which is divisible by 2^N, such a characteristic usually requires the code-sequence to be an even length of 2^N. However, code generators, as is well known in the art, generally use linear feedback shift registers which generate codes of length 2^N-1. Some generators include a method to augment the generated code sequence by inserting an additional code value, as described, for example, in U.S. Pat. No. 5,228,054 entitled POWER-OF-TWO LENGTH PSEUDONOISE SEQUENCE GENERATOR WITH FAST OFFSET ADJUSTMENT by Timothy Rueth et al and incorporated herein by reference. Consequently, the spread-spectrum communication system should also generate spreading code sequences of even length.

Finally, the spread-spectrum communication system should be able to handle many different types of data, such as FAX, voiceband data, and ISDN, in addition to traditional voice traffic. To increase the number of users supported, many systems employ encoding techniques such as ADPCM to achieve "compression" of the digital telephone signal. FAX, ISDN and other data, however, require the channel to be a clear channel. Consequently, there is a need for a spread spectrum communication system that supports compression techniques that also dynamically modify the spread spectrum bearer channel between an encoded channel and a clear channel in response to the type of information contained in the user's signal.

SUMMARY OF THE INVENTION

The present invention is embodied in a multiple access, spread-spectrum communication system which processes a

plurality of information signals received simultaneously over telecommunication lines for simultaneous transmission over a radio frequency (RF) channel as a code-division-multiplexed (CDM) signal. The system includes a radio carrier station (RCS) which receives a call request signal that corresponds to a telecommunication line information signal, and a user identification signal that identifies a user to which the call request and information signal are addressed. The receiving apparatus is coupled to a plurality of code division multiple access (CDMA) modems, one of which provides a global pilot code signal and a plurality of message code signals, and each of the CDMA modems combines one of the plurality of information signals with its respective message code signal to provide a spread-spectrum processed signal. The plurality of message code signals of the plurality of CDMA modems are synchronized to the global pilot code signal. The system also includes assignment apparatus that is responsive to a channel assignment signal for coupling the respective information signals received on the telecommunication lines to indicated ones of the plurality of modems; The assignment apparatus is coupled to a time-slot exchange means. The system further includes a system channel controller coupled to a remote call-processor and to the time-slot exchange means. The system channel controller is responsive to the user identification signal, to provide the channel assignment signal. In the system, an RF transmitter is connected to all of the modems to combine the plurality of spread-spectrum processed message signals with the global pilot code signal to generate a CDM signal. The RF transmitter also modulates a carrier signal with the CDM signal and transmits the modulated carrier signal through an RF communication channel.

The transmitted CDM signal is received from the RF communication channel by a subscriber unit (SU) which processes and reconstructs the transmitted information signal assigned to the subscriber. The SU includes a receiving means for receiving and demodulating the CDM signal from the carrier. In addition, the SU comprises a subscriber unit controller and a CDMA modem which includes a processing means for acquiring the global pilot code and despreading the spread-spectrum processed signal to reconstruct the transmitted information signal.

The RCS and the SUs each contain CDMA modems for transmission and reception of telecommunication signals including information signals and connection control signals. The CDMA modem comprises a modem transmitter having: a code generator for providing an associated pilot code signal and for generating a plurality of message code signals; a spreading means for combining each of the information signals, with a respective one of the message code signals to generate spread-spectrum processed message signals; and a global pilot code generator which provides a global pilot code signal to which the message code signals are synchronized.

The CDMA modem also comprises a modem receiver having associated pilot code acquisition and tracking logic. The associated pilot code acquisition logic includes an associated pilot code generator; a group of associated pilot code correlators for correlating code-phase delayed versions of the associated pilot signal with a receive CDM signal for producing a despread associated pilot signal. The code phase of the associated pilot signal is changed responsive to an acquisition signal value until a detector indicates the presence of the despread associated pilot code signal by changing the acquisition signal value. The associated pilot code signal is synchronized to the global pilot signal. The associated pilot code tracking logic adjusts the associated pilot code signal in phase responsive to the acquisition signal so that the signal power level of the despread associated pilot code signal is maximized. Finally, the CDMA modem receiver includes a group of message signal acquisition circuits. Each message signal acquisition circuit includes a plurality of receive message signal correlators for correlating one of the local receive message code signals with the CDM signal to produce a respective despread receive message signal.

To generate large families of nearly mutually orthogonal codes used by the CDMA modems, the present invention includes a code sequence generator. The code sequences are assigned to a respective logical channel of the spread-spectrum communication system, which includes In-phase (I) and Quadrature (Q) transmission over RF communication channels. One set of sequences is used as pilot sequences which are code sequences transmitted without modulation by a data signal. The code sequence generator circuit includes a long code sequence generator including a linear feedback shift register, a memory which provides a short, even code sequence, and a plurality of cyclic shift, feedforward sections which provide other members of the code family which exhibit minimal correlation with the code sequence applied to the feedforward circuit. The code sequence generator further includes a group of code sequence combiners for combining each phase shifted version of the long code sequence with the short, even code sequence to produce a group, or family, of nearly mutually orthogonal codes.

Further, the present invention includes several methods for efficient utilization of the spread-spectrum channels. First, the system includes a bearer channel modification system which comprises a group of message channels between a first transceiver and second transceiver. Each of the group of message channels supports a different information signal transmission rate. The first transceiver monitors a received information signal to determine the type of information signal that is received, and produces a coding signal relating to the coding signal. If a certain type of information signal is present, the first transceiver switches transmission from a first message channel to a second message channel to support the different transmission rate. The coding signal is transmitted by the first transceiver to the second transceiver, and the second transceiver switches to the second message channel to receive the information signal at a different transmission rate.

Another method to increase efficient utilization of the bearer message channels is the method of idle-code suppression used by the present invention. The spread-spectrum transceiver receives a digital data information signal including a predetermined flag pattern corresponding to an idle period. The method includes the steps of: 1) delaying and monitoring the digital data signal; 2) detecting the predetermined flag pattern; 3) suspending transmission of the digital data signal when the flag pattern is detected; and 4) transmitting the data signal as a spread-spectrum signal when the flag pattern is not detected.

The present invention includes a system and method for closed loop automatic power control (APC) for the RCS and SUs of the spread-spectrum communication system. The SUs transmit spread-spectrum signals, the RCS acquires the spread-spectrum signals, and the RCS detects the received power level of the spread-spectrum signals plus any interfering signal including noise. The APC system includes the RCS and a plurality of SUs, wherein the RCS transmits a plurality of forward channel information signals to the SUs

as a plurality of forward channel spread-spectrum signals having a respective forward transmit power level, and each SU transmits to the base station at least one reverse spread-spectrum signal having a respective reverse transmit power level and at least one reverse channel spread-spectrum signal which includes a reverse channel information signal.

The APC includes an automatic forward power control (AFPC) system, and an automatic reverse power control (ARPC) system. The AFPC system operates by measuring, at the SU, a forward signal-to-noise ratio of the respective forward channel information signal, generating a respective forward channel error signal corresponding to a forward error between the respective forward signal-to-noise ratio and a pre-determined signal-to-noise value, and transmitting the respective forward channel error signal as part of a respective reverse channel information signal from the SU to the RCS. The RCS includes a plural number of AFPC receivers for receiving the reverse channel information signals and extracting the forward channel error signals from the respective reverse channel information signals. The RCU also adjusts the respective forward transmit power level of each one of the respective forward spread-spectrum signals responsive to the respective forward error signal.

The ARPC system operates by measuring, in the RCS, a reverse signal-to-noise ratio of each of the respective reverse channel information signals, generating a respective reverse channel error signal representing an error between the respective reverse channel signal-to-noise ratio and a respective pre-determined signal-to-noise value, and transmitting the respective reverse channel error signal as a part of a respective forward channel information signal to the SU. Each SU includes an ARPC receiver for receiving the forward channel information signal and extracting the respective reverse error signal from the forward channel information signal. The SU adjusts the reverse transmit power level of the respective reverse spread-spectrum signal responsive to the respective reverse error signal.

BRIEF DESCRIPTION OF THE DRAWINGS

FIG. **1** is a block diagram of a code division multiple access communication system according to the present invention.

FIG. **2***a* is a block diagram of a **36** stage linear shift register suitable for use with long spreading code of the code generator of the present invention.

FIG. **2***b* is a block diagram of circuitry which illustrates the feed-forward operation of the code generator.

FIG. **2***c* is a block diagram of an exemplary code generator of the present invention including circuitry for generating spreading code sequences from the long spreading codes and the short spreading codes.

FIG. **2***d* is an alternate embodiment of the code generator circuit including delay elements to compensate for electrical circuit delays.

FIG. **3***a* is a graph of the constellation points of the pilot spreading code QPSK signal.

FIG. **3***b* is a graph of the constellation points of the message channel QPSK signal.

FIG. **3***c* is a block diagram of exemplary circuitry which implements the method of tracking the received spreading code phase of the present invention.

FIG. **4** is a block diagram of the tracking circuit that tracks the median of the received multipath signal components.

FIG. **5***a* is a block diagram of the tracking circuit that tracks the centroid of the received multipath signal components.

FIG. **5***b* is a block diagram of the Adaptive Vector Correlator.

FIG. **6** is a block diagram of exemplary circuitry which implements the acquisition decision method of the correct spreading code phase of the received pilot code of the present invention.

FIG. **7** is a block diagram of an exemplary pilot rake filter which includes the tracking circuit and digital phase locked loop for despreading the pilot spreading code, and generator of the weighting factors of the present invention.

FIG. **8***a* is a block diagram of an exemplary adaptive vector correlator and matched filter for despreading and combining the multipath components of the present invention.

FIG. **8***b* is a block diagram of an alternative implementation of the adaptive vector correlator and adaptive matched filter for despreading and combining the multipath components of the present invention.

FIG. **8***c* is a block diagram of an alternative embodiment of the adaptive vector correlator and adaptive matched filter for despreading and combining the multipath components of the present invention.

FIG. **8***d* is a block diagram of the Adaptive Matched Filter of one embodiment of the present invention.

FIG. **9** is a block diagram of the elements of an exemplary radio carrier station (RCS) of the present invention.

FIG. **10** is a block diagram of the elements of an exemplary multiplexer suitable for use in the RCS shown in FIG. **9**.

FIG. **11** is a block diagram of the elements of an exemplary wireless access controller (WAC) of the RCS shown in FIG. **9**.

FIG. **12** is a block diagram of the elements of an exemplary modem interface unit (MIU) of the RCS shown in FIG. **9**.

FIG. **13** is a high level block diagram showing the transmit, receive, control, and code generation circuitry of the CDMA modem.

FIG. **14** is a block diagram of the transmit section of the CDMA modem.

FIG. **15** is a block diagram of an exemplary modem input signal receiver.

FIG. **16** is a block diagram of an exemplary convolutional encoder as used in the present invention.

FIG. **17** is a block diagram of the receive section of the CDMA modem.

FIG. **18** is a block diagram of an exemplary adaptive matched filter as used in the CDMA modem receive section.

FIG. **19** is a block diagram of an exemplary pilot rake as used in the CDMA modem receive section.

FIG. **20** is a block diagram of an exemplary auxiliary pilot rake as used in the CDMA modem receive section.

FIG. **21** is a block diagram of an exemplary video distribution circuit (VDC) of the RCS shown in FIG. **9**.

FIG. **22** is a block diagram of an exemplary OF transmitter/receiver and exemplary power amplifiers of the RCS shown in FIG. **9**.

FIG. **23** is a block diagram of an exemplary subscriber unit (SU) of the present invention.

FIG. **24** is a flow-chart diagram of an exemplary call establishment algorithm for an incoming call request used by the present invention for establishing a bearer channel between an RCS and an SU.

FIG. **25** is a flow-chart diagram of an exemplary call establishment algorithm for an outgoing call request used by the present invention for establishing a bearer channel between an RCS and an SU.

FIG. **26** is a flow-chart diagram of an exemplary maintenance power control algorithm of the present invention.

FIG. **27** is a flow-chart diagram of an exemplary automatic forward power control algorithm of the present invention.

FIG. **28** is a flow-chart diagram of an exemplary automatic reverse power control algorithm of the present invention.

FIG. **29** is a block diagram of an exemplary closed loop power control system of the present invention when the bearer channel is established.

FIG. **30** is a block diagram of an exemplary closed loop power control system of the present invention during the process of establishing the bearer channel.

GLOSSARY OF ACRONYMS

GLOSSARY OF ACRONYMS

Acronym	Definition
AC	Assigned Channels
A/D	Analog-to-Digital
ADPCM	Adaptive Differential Pulse Code Modulation
AFPC	Automatic Forward Power Control
AGC	Automatic Gain Control
AMF	Adaptive Matched Filter
APC	Automatic Power Control
ARPC	Automatic Reverse Power Control
ASPT	Assigned Pilot
AVC	Adaptive Vector Correlator
AXCH	Access Channel
B-CDMA	Broadband Code Division Multiple Access
BCM	Bearer Channel Modification
BER	Bit Error Rate
BS	Base Station
CC	Call Control
CDM	Code Division Multiplex
CDMA	Code Division Multiple Access
CLK	Clock Signal Generator
CO	Central Office
CTCH	Control Channel
CUCH	Check-Up Channel
dB	Decibels
DCC	Data Combiner Circuitry
DI	Distribution Interface
DLL	Delay Locked Loop
DM	Delta Modulator
DS	Direct Sequence
EPIC	Extended PCM Interface Controller
FBCH	Fast Broadcast Channel
FDM	Frequency Division Multiplex
FD/TDMA	Frequency & Time Division Systems
FDMA	Frequency Division Multiple Access
FEC	Forward Error Correction
FSK	Frequency Shift Keying
FSU	Fixed Subscriber Unit
GC	Global Channel
GLPT	Global Pilot
GPC	Global Pilot Code
GPSK	Gaussian Phase Shift Keying
GPS	Global Positioning System
HPPC	High Power Passive Components
HSB	High Speed Bus
I	In-Phase
IC	Interface Controller
ISDN	Integrated Services Digital Network
ISST	Initial System Signal Threshold
LAXPT	Long Access Pilot
LAPD	Link Access Protocol
LCT	Local Craft Terminal
LE	Local Exchange
LFSR	Linear Feedback Shift Register
LI	Line Interface
LMS	Least Mean Square
LOL	Loss of Code Lock
LPF	Low Pass Filter
LSR	Linear Shift Register
MISR	Modem Input Signal Receiver
MIU	Modem Interface Unit
MM	Mobility Management
MOI	Modem Output Interface
MPC	Maintenance Power Control
MSK	M-ary Phase Shift Keying
MSK	Minimum Shift Keying
MSU	Mobile Subscriber Unit
NE	Network Element
OMS	Operation and Maintenance System
OS	Operations System
OQPSK	Offset Quadrature Phase Shift Keying
OW	Order Wire
PARK	Portable Access Rights Key
PBX	Private Branch Exchange
PCM	Pulse Coded Modulation
PCS	Personal Communication Services
PG	Pilot Generator
PLL	Phase Locked Loop
PLT	Pilot
PN	Pseudonoise
POTS	Plain Old Telephone Service
PSTN	Public Switched Telephone Network
Q	Quadrature
QPSK	Quadrature Phase Shift Keying
RAM	Random Access Memory
RCS	Radio Carrier Station
RDI	Receiver Data Input Circuit
RDU	Radio Distribution Unit
RF	Radio Frequency
RLL	Radio Local Loop
SAXPT	Short Access Channel Pilots
SBCH	Slow Broadcast Channel
SHF	Super High Frequency
SIR	Signal Power to Interface Noise Power Ratio
SLIC	Subscriber Line Interface Circuit
SNR	Signal-to-Noise Ratio
SPC	Service PC
SPRT	Sequential Probability Ratio Test
STCH	Status Channel
SU	Subscriber Unit
TDM	Time Division Multiplexing
TMN	Telecommunication Management Network
TRCH	Traffic Channels
TSI	Time-Slot Interchanger
TX	Transmit
TXIDAT	I-Modem Transmit Data Signal
TXQDAT	Q-Modem Transmit Data Signal
UHF	Ultra High Frequency
VCO	Voltage Controlled Oscillator
VDC	Video Distribution Circuit
VGA	Variable Gain Amplifier
VHF	Very High Frequency
WAC	Wireless Access Controller

-continued

GLOSSARY OF ACRONYMS

DESCRIPTION OF THE EXEMPLARY EMBODIMENT

General System Description

The system of the present invention provides local-loop telephone service using radio links between one or more base stations and multiple remote subscriber units. In the exemplary embodiment, a radio link is described for a base

station communicating with a fixed subscriber unit (FSU), but the system is equally applicable to systems including multiple base stations with radio links to both FSUs and Mobile Subscriber Units (MSUs). Consequently, the remote subscriber units are referred to herein as Subscriber Units (SUs).

Referring to FIG. **1**, Base Station (BS) **101** provides call connection to a local exchange (LE) **103** or any other telephone network switching interface, such as a private branch exchange (PBX) and includes a Radio Carrier Station (RCS) **104**. One or more RCSs **104**, **105**, **110** connect to a Radio Distribution Unit (RDU) **102** through links **131**, **132**, **137**, **138**, **139**, and RDU **102** interfaces with LE **103** by transmitting and receiving call set-up, control, and information signals through telco links **141**, **142**, **150**. SUs **116**, **119** communicate with the RCS **104** through radio links **161**, **162**, **163**, **164**, **165**. Alternatively, another embodiment of the invention includes several SUs and a "master" SU with functionality similar to the RCS. Such an embodiment may or may not have connection to a local telephone network.

The radio links **161** to **165** operate within the frequency bands of the DCS1800 standard (1.71–1.785 Ghz and 1.805–1.880 GHz); the US-PCS standard (1.85–1.99 Ghz); and the CEPT standard (2.0–2.7 GHz). Although these bands are used in described embodiment, the invention is equally applicable to the entire UHF to SH bands, including bands from 2.7 GHz to 5 GHz. The transmit and receive bandwidths are multiples of 3.5 MS starting at 7 MHz, and multiples of 5 MHz starting at 10 MHz, respectively. The described system includes bandwidths of 7, 10, 10.5, 14 and 15 MHz. In the exemplary embodiment of the invention, the minimum guard band between the Uplink and Downlink is 20 MHz, and is desirably at least three times the signal bandwidth. The duplex separation is between 50 to 175 MHz, with the described invention using 50, 75, 80, 95, and 175 MHz. Other frequencies may also be used.

Although the described embodiment uses different spread-spectrum bandwidths centered around a carrier for the transmit and receive spread-spectrum channels, the present method is readily extended to systems using multiple spread-spectrum bandwidths for the transmit channels and multiple spread-spectrum bandwidths for the receive channels. Alternatively, because spread-spectrum communication systems have the inherent feature that one user's transmission appears as noise to another user's despreading receiver, an embodiment may employ the same spread-spectrum channel for both the transmit and receive path channels. In other words, Uplink and Downlink transmissions can occupy the same frequency band. Furthermore, the present method may be readily extended to multiple CDMA frequency bands, each conveying a respectively different set of messages, uplink, downlink or uplink and downlink.

The spread binary symbol information is transmitted over the radio links **161** to **165** using Quadrature Phase Shift Keying (QPSK) modulation with Nyquist Pulse Shaping in the present embodiment, although other modulation techniques may be used, including, but not limited to, Offset QPSK (OQPSK) and Minimum Shift Keying (MSK). Gaussian Phase Shift Keying (GPSK) and M-ary Phase Shift Keying (MPSK)

The radio links 161 to 165 incorporate Broadband Code Division Multiple Access (B-CDMA™) as the mode of transmission in both the Uplink and Downlink directions. CDMA (also known as Spread Spectrum) communication techniques used in multiple access systems are well-known, and are described in U.S. Pat. No. 5,228,056 entitled SYNCHRONOUS SPREAD-SPECTRUM COMMUNICATION SYSTEM AND METHOD by Donald T Schilling. The system described utilizes the Direct Sequence (DS) spreading technique. The CDMA modulator performs the spread-spectrum spreading code sequence generation, which can be a pseudonoise (PN) sequence; and complex DS modulation of the QPSK signals with spreading code sequences for the In-phase (I) and Quadrature (Q) channels. Pilot signals are generated and transmitted with the modulated signals, and pilot signals of the present embodiment are spreading codes not modulated by data. The pilot signals are used for synchronization, carrier phase recovery, and for estimating the impulse response of the radio channel. Each SU includes a single pilot generator and at least one CDMA modulator and demodulator, together known as a CDMA modem. Each RCS **104**, **105**, **110** has a single pilot generator plus sufficient CDMA modulators and demodulators for all of the logical channels in use by all SUs.

The CDMA demodulator despreads the signal with appropriate processing to combat or exploit multipath propagation effects. Parameters concerning the received power level are used to generate the Automatic Power Control (APC) information which, in turn, is transmitted to the other end of the communication link. The APC information is used to control transmit power of the automatic forward power control (AFPC) and automatic reverse power control (ARPC) links In addition, each RCS **104**, **105** and **110** can perform Maintenance Power Control (PC), in a manner similar to APC, to adjust the initial transmit power of each SU **111**, **112**, **115**, **117** and **118**. Demodulation is coherent where the pilot signal provides the phase reference.

The described radio links support multiple traffic channels with data rates of 8, 16, 32, 64, 128, and 144 kb/s. The physical channel to which a traffic channel is connected operates with a 64 k symbol/sec rate. Other data rates may be supported, and Forward Error Correction (FEC) coding can be employed. For the described embodiment, FEC with coding rate of ½ and constraint length 7 is used. Other rates and constraint lengths can be used consistent with the code generation techniques employed.

Diversity combining at the radio antennas of RCS **104**, **105** and **110** is not necessary because CDMA has inherent frequency diversity due to the spread bandwidth. Receivers include Adaptive Matched Filters (AMFs) (not shown in FIG. **1**) which combine the multipath signals. In the present embodiment, the exemplary AMFs perform Maximal Ratio Combining.

Referring to FIG. **1**, RCS **104** interfaces to RDU **102** through links **131**, **132**, **137** with, for example, 1.544 Mb/s DS1, 2.048 Mb/s E1; or HDSL Formats to receive and send digital data signals. While these are typical telephone company standardized interfaces, the present invention is not limited to these digital data formats only. The exemplary RCS line interface (not shown in FIG. **1**) translates the line coding (such as HDB3, B8ZS, AMI) and extracts or produces framing information, performs Alarms and Facility signaling functions, as well as channel specific loop-back and parity check functions. The interfaces for this description provide 64 kb/s PCM encoded or 32 kb/s ADPCM encoded telephone traffic channels or ISDN channels to the RCS for processing. Other ADPCM encoding techniques can be used consistent with the sequence generation techniques.

The system of the present invention also supports bearer rate modification between the RCS **104** and each SU **111**, **112**, **115**, **117** and **118** communicating with RCS **104** in

which a CDMA message channel supporting 64 kb/s may be assigned to voiceband data or FAX when rates above 4.8 kb/s are present. Such 64 kb/s bearer channel is considered an unencoded channel. For ISDN, bearer rate modification may be done dynamically, based upon the D channel messages.

In FIG. **1**, each SU **111**, **112**, **115**, **117** and **118** either includes or interfaces with a telephone unit **170**, or interfaces with a local switch (PBX) **171**. The input from the telephone unit may include voice, voiceband data and signaling. The SU translates the analog signals into digital sequences, and may also include a Data terminal **172** or an ISDN interface **173**. The SU can differentiate voice input, voiceband data or FAX and digital data. The SU encodes voice data with techniques such as ADPCM at 32 kb/s or lower rates, and detects voiceband data or FAX with rates above 4.8 kb/s to modify the traffic channel (bearer rate modification) for unencoded transmission. Also, A-law, u-law, or no companding of the signal may be performed before transmission. For digital data, data compression techniques, such as idle flag removal, may also be used to conserve capacity and minimize interference.

The transmit power levels of the radio interface between RCS **104** and SUs **111**, **112**, **115**, **117** and **118** are controlled using two different closed loop power control methods. The Automatic Forward Power Control (AFPC) method determines the Downlink transmit power level, and the Automatic Reverse Power Control (ARPC) method determines the Uplink transmit power level. The logical control channel by which SU **111** and RCS **104**, for example, transfer power control information operates at least a 16 kHz update rate. Other embodiments may use a faster or slower update rate for example 64 kHz. These algorithms ensure that the transmit power of a user maintains an acceptable Bit-Error Rate (BER), maintains the system power at a minimum to conserve power, and maintains the power level of all SUs **111**, **112**, **115**, **117** and **118** received by RCS **104** at a nearly equal level.

In addition, the system uses an optional maintenance power control method during the inactive mode of a SU. When SU **111** is inactive or powered-down to conserve power, the unit occasionally activates to adjust its initial transmit power level setting in response to a maintenance power control signal from RCS **104**. The maintenance power signal is determined by the RCS **104** by measuring the received power level of SU **111** and present system power level and, from this, calculates the necessary initial transmit power. The method shortens the channel acquisition time of SU **111** to begin a communication. The method also prevents the transmit power level of SU **111** from becoming too high and interfering with other channels during the initial transmission before the closed loop power control reduces the transmit power.

RCS **104** obtains synchronization of its clock from an interface line such as, but not limited to, E1, T1, or HDSL interfaces. RCS **104** can also generate its own internal clock signal from an oscillator which may be regulated by a Global Positioning System (GPS) receiver. RCS **104** generates a Global Pilot Code, a channel with a spreading code but no data modulation, which can be acquired by remote SUs **111** through **118**. All transmission channels of the RCS are synchronized to the Pilot channel, and spreading code phases of code generators (not shown) used for Logical communication channels within RCS **104** are also synchronized to the Pilot channel's spreading code phase. Similarly, SUs **111** through **118** which receive the Global Pilot Code of RCS **104** synchronize the spreading and de-spreading code phases of the code generators (not shown) of the SUs to the Global Pilot Code.

RCS **104**, SU **111**, and RDU **102** may incorporate system redundancy of system elements and automatic switching between internal functional system elements upon a failure event to prevent loss or drop-out of a radio link, power supply, traffic channel, or group of traffic channels.

Logical Communication Channels

A 'channel' of the prior art is usually regarded as a communications path which is part of an interface and which can be distinguished from other paths of that interface without regard to its content. However, in the case of CDMA, separate communications paths are distinguished only by their content. The term 'logical channel' is used to distinguish the separate data streams, which are logically equivalent to channels in the conventional sense. All logical channels and sub-channels of the present invention are mapped to a common 64 kilo-symbols per second (ksym/s) QPSK stream. Some channels are synchronized to associated pilot codes which are generated from, and perform a similar function to the system Global Pilot Code (GPC). The system pilot signals are not, however, considered logical channels.

Several logical communication channels are used over the RF communication link between the RCS and SU. Each logical communication channel either has a fixed, predetermined spreading code or a dynamically assigned spreading code. For both pre-determined and assigned codes, the code phase is synchronized with the Pilot Code. Logical communication channels are divided into two groups: the Global Channel (GC) group includes channels which are either transmitted from the base station RCS to all remote SUs or from any SU to the RCS of the base station regardless of the SU's identity. The channels in the GC group may contain information of a given type for all users including those channels used by SUs to gain system access. Channels in the Assigned Channels (AC) group are those channels dedicated to communication between the RCS and a particular SU.

The Global Channels (GC) group provides for 1) Broadcast Control logical channels, which provide point to multipoint services for broadcasting messages to all SUs and paging messages to SUs; and 2) Access Control logical channels which provide point-to-point services on global channels for SUs to access the system and obtain assigned channels.

The RCS of the present invention has multiple Access Control logical channels, and one Broadcast Control group. An SU of the present invention has at least one Access Control channel and at least one Broadcast Control logical channel.

The Global logical channels controlled by the RCS are the Fast Broadcast Channel (FBCH) which broadcasts fast changing information concerning which services and which access channels are currently available, and the Slow Broadcast Channel (SBCH) which broadcasts slow changing system information and paging messages. The Access Channel (AXCH) is used by the SUs to access an RCS and gain access to assigned channels. Each AXCH is paired with a Control Channel (CTCH). The CTCH is used by the RCS to acknowledge and reply to access attempts by SUs. The Long Access Pilot (LAW is transmitted synchronously with AXCH to provide the RCS with a time and phase reference.

An Assigned Channel (AC) group contains the logical channels that control a single telecommunication connection

between the RCS and an SU. The functions developed when an AC group is formed include a pair of power control logical message channels for each of the Uplink and Downlink connections, and depending on the type of connection, one or more pairs of traffic channels. The Bearer Control function performs the required forward error control, bearer rate modification, and encryption functions.

Each SU **111**, **112**, **115**, **117** and **118** has at least one AC group formed when a telecommunication connection exists, and each RCS **104**, **105** and **110** has multiple AC groups formed, one for each connection in progress. An AC group of logical channels is created for a connection upon successful establishment of the connection. The AC group includes encryption, FEC coding, and multiplexing on transmission, and FEC decoding, deception and demultiplexing on reception.

Each AC group provides a set of connection oriented point-to-point services and operates in both directions between a specific RCS, for example, RCS **104** and a specific SU, for example, SU **111**. An AC group formed for a connection can control more than one bearer over the RF communication channel associated with a single connection. Multiple bearers are used to carry distributed data such as, but not limited to, ISDN. An AC group can provide for the duplication of traffic channels to facilitate switch over to 64 kb/s PCM for high speed facsimile and modem services for the bearer rate modification function.

The assigned logical channels formed upon a successful call connection and included in the AC group are a dedicated signaling channel [order wire (OW)], an APC channel, and one or more Traffic channels (TRCH) which are bearers of 8, 16, 32, pr 64 kb/s depending on the service supported. For voice traffic, moderate rate coded speech, ADPCM, or PCM can be supported on the Traffic channels. For ISDN service types, two 64 kb/s TRCHs form the B channels and a 16 kb/s ARCH forms the D channel. Alternatively, the APC subchannel may either be separately modulated on its own CDMA channel, or may be time division multiplexed with a traffic channel or OW channel.

Each SU **111**, **112**, **115**, **117** and **118** of the present invention supports up to three simultaneous traffic channels. The mapping of the three logical channels for TRCHs to the user data is shown below in Table 1:

TABLE 1

Mapping of service types to the three available TRCH channels

Service	TRCH(0)	TRCH(1)	TRCH(2)
16 kb/s POTS	TRCH/16	not used	not used
32 + 64 kb/s POTS (during BCM)	TRCH/32	TRCH/64	not used
32 kb/s POTS	TRCH/32	not used	not used
64 kb/s POTS	not used	TRCH/64	not used
ISDN D	not used	not used	TRCH/16
ISDN B + D	TRCH/64	not used	TRCH/16
ISDN 2B + D	TRCH/64	TRCH/64	TRCH/16
Digital LL @ 64 kb/s	TRCH/64	not used	not used
Digital LL @ 2 × 64 kb/s	TRCH/64	TRCH/64	not used
Analog LL @ 64 kb/s	TRCH/64	not used	not used

The APC data rate is sent at 64 kb/s. The APC logical channel is not FEC coded to avoid delay and is transmitted at a relatively low power level to minimize capacity used for APC. Alternatively, the APC and OW may be separately modulated using complex spreading code sequences, or they may be time division multiplexed.

The OW logical channel is FEC coded with a rate ½ convolutional code. This logical channel is transmitted in bursts when signaling data is present to reduce interference. After an idle period, the OW signal begins with at least 35 symbols prior to the start of the data frame. For silent maintenance call data, the OW is transmitted continuously between frames of data. Table 2 summarizes the logical channels used in the exemplary embodiment:

TABLE 2

Logical Channels and sub-channels of the B-CDMA Air Interface

Channel name	Abbr.	Brief Description	Direction (forward or reverse)	Bit rate	Max BER	Power level	Pilot
Global Channels							
Fast Broadcast Channel	FBCH	Broadcasts fast-changing system information	F	16 kb/s	1e-4	Fixed	GLPT
Slow Broadcast Channel	SBCH	Broadcasts paging messages to FSUs and slow-changing system information	F	16 kb/s	1e-7	Fixed	GLPT
Access Channels	AXCH(i)	For initial access attempts by FSUs	R	32 kb/s	1e-7	Controlled by APC	LAXPT(i)
Control Channels	CTCH(i)	For granting access	F	32 kb/s	1e-7	Fixed	GLPT
Assigned Channels							
16 kb/s POTS	TRCH /16	General POTS use	F/R	16 kb/s	1e-4	Controlled by APC	F-GLPT R-ASPT
32 kb/s POTS	TRCH /32	General POTS use	F/R	32 kb/s	1e-4	Controlled by APC	F-GLPT R-ASPT
64 kb/s	TRCH	POTS use for	F/R	64	1e-4	Controlled	F-GLPT

TABLE 2-continued

Logical Channels and sub-channels of the B-CDMA Air Interface

Channel name	Abbr.	Brief Description	Direction (forward or reverse)	Bit rate	Max BER	Power level	Pilot
POTS	/64	in-band modems/fax		kb/s		by APC	R-ASPT
D channel	TRCH /16	ISDN D channel	F/R	16 kb/s	1e-7	Controlled by APC	F-GLPT R-ASPT
Order wire channel	OW	assigned signaling channel	F/R	32 kb/s	1e-7	Controlled by APC	F-GLPT R-ASPT
APC channel	APC	carries APC commands	F/R	64 kb/s	2e-1	Controlled by APC	F-GLPT R-ASPT

The Spreading Codes

The CDMA code generators used to encode the logical channels of the present invention employ Linear Shift Registers (LSRs) with feedback logic which is a method well known in the art. The code generators of the present embodiment of the invention generate 64 synchronous unique sequences. Each RF communication channel uses a pair of these sequences for complex spreading (in-phase and quadrature) of the logical channels, so the generator gives 32 complex spreading sequences. The sequences are generated by a single seed which is initially loaded into shift register circuit.

The Generation of Spreading Code Sequences and Seed Selection

The spreading code period of the present invention is defined as an integer multiple of the symbol duration, and the beginning of the code period is also the beginning of the symbol. The relation between bandwidths and the symbol lengths chosen for the exemplary embodiment of the present invention is:

BW (MHZ)	L (chips/symbol)
7	91
10	130
10.5	133
14	182
15	195

The spreading code length is also a multiple of 64 and of 96 for ISDN frame support. The spreading code is a sequence of symbols, called chips or chip values. The general methods of generating pseudorandom sequences using Galois Field mathematics is known to those skilled in the art; however, a unique set, or family, of code sequenced has been derived for the present invention. First, the length of the linear feedback shift register to generate a code sequence is chosen, and the initial value of the register is called a "seed". Second, the constraint is imposed that no code sequence generated by a code seed may be a cyclic shift of another code sequence generated by the same code seed. Finally, no code sequence generated from one seed may be a cyclic shift of a code sequence generated by another seed.

It has been determined that the spreading code length of chip values of the present invention is:

$$128\times233415=29877120 \quad (1)$$

The spreading codes are generated by combining a linear sequence of period 233415 and a nonlinear sequence of period 128

The FBCH channel of the exemplary embodiment is an exception because it is not coded with the 128 length sequence, so the FBCH channel spreading code has period 233415.

The nonlinear sequence of length 128 is implemented as a fixed sequence loaded into a shift register with a feed-back connection. The fixed sequence can be generated by an m-sequence of length 127 padded with an extra logic 0, 1, or random value as is well known in the art.

The linear sequence of length L=233415 is generated using a linear feedback shift register (LFSR) circuit with 36 stages. The feedback connections correspond to a irreducible polynomial h(n) of degree 36. The polynomial h(x) chosen for the exemplary embodiment of the present invention is

$$h(x)=x^{36}+x^{35}+x^{30}+x^{28}+x^{26}+x^{25}+x^{22}+x^{20}+x^{19}+x^{17}+x^{16}+x^{15}+x^{14}+x^{12}+x^{11}+x^{9}+x^{8}+x^{4}+x^{3}+x^{2}+x^{1}$$

or, in binary notation

$$h(x)=(1100001010110010110111101101100011101) \quad (2)$$

A group of "seed" values for a LFSR representing the polynomial h(x) of equation (2) which generates code sequences that are nearly orthogonal with each other is determined. The first requirement of the seed values is that the seed values do not generate two code sequences which are simply cyclic shifts of each other.

The seeds are represented as elements of $GF(2^{36})$ which is the field of residue classes modulo h(x). This field has a primitive element $\delta=x^2+x+1$. The binary representation of δ is

$$\delta=000000000000000000000000000000000111 \quad (3)$$

Every element of $GF(2^{36})$ can also be written as a power of δ reduced modulo h(x). Consequently, the seeds are represented as powers of δ, the primitive element.

The solution for the order of an element does not require a search of all values; the order of an element divides the order of the field ($GF(2^{36})$). When **6** is any element of $GF(2^{36})$ with

$$x^{e}\equiv 1 \quad (4)$$

for some e, then $e|2^{36}-1$. Therefore, the order of any element in $GF(2^{36})$ divides $2^{36}-1$.

Using these constraints, it has been determined that a numerical search generates a group of seed values, n, which are powers of δ, the primitive element of h(x).

The present invention includes a method to increase the number of available seeds for use in a CDMA communication system by recognizing that certain cyclic shifts of the previously determined code sequences may be used simultaneously. The round trip delay for the cell sizes and bandwidths of the present invention are less than 3000 chips. In one embodiment of the present invention, sufficiently separated cyclic shifts of a sequence can be used within the same cell without causing ambiguity for a receiver attempting to determine the code sequence. This method enlarges the set of sequences available for use.

By implementing the tests previously described, a total of 3879 primary seeds were determined through numerical computation. These seeds are given mathematically as

$$\delta^n \text{modulo } h(x) \tag{5}$$

where 3879 values of n are listed in the Appendix A, with δ=(00, . . . 00111) as before in (3).

When all primary seeds are known, all secondary seeds of the present invention are derived from the primary seeds by shifting them multiples of 4095 chips modulo h(x). Once a family of seed values is determined, these values are stored in memory and assigned to logical channels as necessary. Once assigned, the initial seed value is simply loaded into LFSR to produce the required spreading code sequence associated with the seed value.

Rapid Acquisition Feature of Long and Short codes

Rapid acquisition of the correct code phase by a spread-spectrum receiver is improved by designing spreading codes which are faster to detect. The present embodiment of the invention includes a new method of generating code sequences that have rapid acquisition properties by using one or more of the following methods. First, a long code may be constructed from two or more short codes. The new implementation uses many code sequences, one or more of which are rapid acquisition sequences of length L that have average acquisition phase searches r=log2L. Sequences with such properties are well known to those practiced in the art. The average number of acquisition test phases of the resulting long sequence is a multiple of r=log2L rather than half of the number of phases of the long sequence.

Second, a method of transmitting complex valued spreading code sequences (In-phase (I) and Quadrature (Q) sequences) in a pilot spreading code signal may be used rather than transmitting real valued sequences. Two or more separate code sequences may be transmitted over the complex channels. If the sequences have different phases, an acquisition may be done by acquisition circuits in parallel over the different code sequences when the relative phase shift between the two or more code channels is known. For example, for two sequences, one can be sent on an In phase (I) channel and one on the Quadrature (Q) channel. To search the code sequences, the acquisition detection means searches the two channels, but begins the (Q) channel with an offset equal to one-half of the spreading code sequence length. With code sequence length of N, the acquisition means starts the search at N/2 on the (Q) channel. The average number of tests to find acquisition is N/2 for a single code search, but searching the (I) and phase delayed (Q) channel in parallel reduces the average number of tests to N/4. The codes sent on each channel could be the same code, the same code with one channel's code phase delayed, or different code sequences.

Epoch and Sub-epoch Structures

The long complex spreading codes used for the exemplary system of the present invention have a number of chips after which the code repeats. The repetition period of the spreading sequence is called an epoch. To map the logical channels to CDMA spreading codes, the present invention uses an Epoch and Sub-epoch structure. The code period for the CDMA spreading code to modulate logical channels is 29877120 chips/code period which is the same number of chips for all bandwidths. The code period is the epoch of the present invention, and Table 3 below defines the epoch duration for the supported chip rates. In addition, two sub-epochs are defined over the spreading code epoch and are 233415 chips and 128 chips long.

The 233415 chip sub-epoch is referred to as a long sub-epoch, and is used for synchronizing events on the RF communication interface such as encryption key switching and changing from global to assigned codes. The 128 chip short epoch is defined for use as an additional timing reference. The highest symbol rate used with a single CDMA code is 64 ksym/s. There is always an integer number of chips in a symbol duration for the supported symbol rates 64, 32, 16, and 8 ksym/s.

TABLE 3

Bandwidths, Chip Rates, and Epochs

Bandwidth (MHz)	Chip Rate, Complex (Mchip/sec)	number of chips in a 64 kbit/sec symbol	128 chip sub-epoch duration* (μs)	233415 chip sub-epoch duration* (ms)	Epoch duration (sec)
7	5.824	91	21.978	40.078	5.130
10	8.320	130	15.385	28.055	3.591
10.5	8.512	133	15.038	27.422	3.510
14	11.648	182	10.989	20.039	2.565
15	12.480	195	10.256	18.703	2.394

*numbers in these columns are rounded to 5 digits.

Mapping of the Logical Channels to Epochs and Sub-epochs

The complex spreading codes are designed such that the beginning of the sequence epoch coincides with the beginning of a symbol for all of the bandwidths supported. The present invention supports bandwidths of 7, 10, 10.5, 14, and 5 MHz. Assuming nominal 20% roll-off, these bandwidths correspond to the following chip rates in Table 4.

TABLE 4

Supported Bandwidths and Chip Rates for CDMA.

BW (MHz)	R_c (Complex MChips/sec)	Excess BW, %	L:(R_c/L) = 64k	Factorization of L
7	5.824	20.19	91	7 × 13
10	8.320	20.19	130	2 × 5 × 13
10.5	8.512	23.36	133	7 × 19
14	11.648	20.19	182	2 × 7 × 13
15	12.480	20.19	195	3 × 5 × 13

The number of chips in an epoch is:

$$N=29877120=2^7\times3^3\times5\times7\times13\times19 \tag{6}$$

If interleaving is used, the beginning of an interleaver period coincides with the beginning of the sequence epoch. The spreading sequences generated using the method of the present invention can support interleaver periods that are multiples of 1.5 ms for various bandwidths.

Cyclic sequences of the prior art are generated using linear feedback shift register (LFSR) circuits. However, this method does not generate sequences of even length. One embodiment of the spreading code sequence generator using the code seeds generated previously is shown in FIG. **2***a*, FIG. **2***b*, and FIG. **2***c*. The present invention uses a 36 stage LFSR **201** to generate a sequence of period N'=233415=$3^3\times$ 5×7×13×19, which is C_o in FIG. **2***a*. In FIGS. **2***a*, **2***b*, and **2***c*, the symbol ⊕ represents a binary addition (EXCLUSIVE-OR). A sequence generator designed as above generates the in-phase and quadrature parts of a set of complex sequences. The tap connections and initial state of the 36 stage LFSR determine the sequence generated by this circuit. The tap coefficients of the 36 stage LFSR are determined such that the resulting sequences have the period 233415. Note that the tap connections shown in FIG. **2***a* correspond to the polynomial given in equation (2). Each resulting sequence is then overlaid by binary addition with the 128 length sequence C_* to obtain the epoch period 29877120.

FIG. **2***b* shows a Feed Forward (FF) circuit **202** which is used in the code generator. The signal X[n−1] is output of the chip delay **211**, and the input of the chip delay **211** is X[n]. The code chip C[n] is formed by the logical adder **212** from the input X[n] and X[n−1]. FIG. **2***c* shows the complete spreading code generator. From the LFSR **201**, output signals go through a chain of up to 63 single stage FFs **203** cascaded as shown. The output of each FF is overlaid with the short, even code sequence C_* period 128=2^7 which is stored in code memory **222** and which exhibits spectral characteristics of a pseudorandom sequence to obtain the epoch N=29877120. This sequence of 128 is determined by using an m-sequence (PN sequence) of length 127=2^7-1 and adding a bit-value, such as logic 0, to the sequence to increase the length to 128 chips. The even code sequence C_* is input to the even code shift register **221**, which is a cyclic register, that continually outputs the sequence. The short sequence is then combined with the long sequence using an EXCLUSIVE-OR operation **213**, **214**, **220**.

As shown in FIG. **2***c*, up to 63 spreading code sequences C_o through C_{63} are generated by tapping the output signals of FFs **203** and logically adding the short sequence C_* in binary adders **213**, **214**, and **220**, for example. One skilled in the art would realize that the implementation of FF **203** will create a cumulative delay effect for the code sequences produced at each FF stage in the chain. This delay is due to the nonzero electrical delay in the electronic components of the implementation. The timing problems associated with the delay can be mitigated by inserting additional delay elements into the FF chain in one version of the embodiment of the invention. The FF chain of FIG. **2***c* with additional delay elements is shown in FIG. **2***d*.

The code-generators in the exemplary embodiment of the present invention are configured to generate either global codes, or assigned codes. Global codes are CDMA codes that can be received or transmitted by all users of the system. Assigned codes are CDMA codes that are allocated for a particular connection. When a set of sequences are generated from the same generator as described, only the seed of the 36 stage LFSR is specified to generate a family of sequences. Sequences for all the global codes, are generated using the same LFSR circuit. Therefore, once an SU has synchronized to the Global pilot signal from an RCS and knows the seed for the LFSR circuit for the Global Channel codes, it can generate not only the pilot sequence but also all other global codes used by the RCS.

The signal that is upconverted to RF is generated as follows. The output signals of the above shift register circuits are converted to an antipodal sequence (0 maps into +1, 1 maps into −1). The Logical channels are initially converted to QPSK signals, which are mapped as constellation points as is well known in the art. The In-phase and Quadrature channels of each QPSK signal form the real and imaginary parts of the complex data value. Similarly, two spreading codes are used to form complex spreading chip values. The complex data are spread by being multiplied by the complex spreading code. Similarly, the received complex data is correlated with the conjugate of the complex spreading code to recover despread data.

Short Codes

Short codes are used for the initial ramp-up process when an SU accesses an RCS. The period of the short codes is equal to the symbol duration and the start of each period is aligned with a symbol boundary. Both SU and RCS derive the real and imaginary parts of the short codes from the last eight feed-forward sections of the sequence generator producing the global codes for that cell.

The short codes that are in use in the exemplary embodiment of the invention are updated every 3 ms. Other update times that are consistent with the symbol rate may be used. Therefore, a change-over occurs every 3 ms starting from the epoch boundary. At a change-over, the next symbol length portion of the corresponding feed-forward output becomes the short code. When the SU needs to use a particular short code, it waits until the first 3 ms boundary of the next epoch and stores the next symbol length portion output from the corresponding FF section. This shall be used as the short code until the next change-over, which occurs 3 ms later.

The signals represented by these short codes are known as Short Access Channel pilots (SAXPTs).

Mapping of Logical Channels to Spreading Codes

The exact relationship between the spreading code sequences and the CDMA logical channels and pilot signals is documented in Table **5***a* and Table **5***b*. Those signal names ending in '-CH' correspond to logical channels. Those signal names ending in '-PT' correspond to pilot signals, which are described in detail below.

TABLE 5a

Spreading code sequences and global CDMA codes

Sequence	Quadrature	Logical Channel or Pilot Signal	Direction
C_0	I	FBCH	Forward (F)
C_1	Q	FBCH	F
$C_2\oplus C^*$	I	GLPT	F
$C_3 C^*$	Q	GLPT	F
$C_4\oplus C^*$	I	SBCH	F
$C_5\oplus C^*$	Q	SBCH	F
$C_6\oplus C^*$	I	CTCH (0)	F
$C_7\oplus C^*$	Q	CTCH (0)	F
$C_8\oplus C^*$	I	APCH (1)	F
$C_9\oplus C^*$	Q	APCH (1)	F
$C_{10}\oplus C_*$	I	CTCH (1)	F
$C_{11}\oplus C_*$	Q	CTCH (1)	F
$C_{12}\oplus C_*$	I	APCH (1)	F
$C_{13}\oplus C_*$	Q	APCH (1)	F
$C_{14}\oplus C_*$	I	CTCH (2)	F
$C_{15}\oplus C_*$	Q	CTCH (2)	F
$C_{16}\oplus C_*$	I	APCH (2)	F
$C_{17}\oplus C_*$	Q	APCH (2)	F
$C_{18}\oplus C_*$	I	CTCH (3)	F

TABLE 5a-continued

Spreading code sequences and global CDMA codes

Sequence	Quadrature	Logical Channel or Pilot Signal	Direction
$C_{19}\oplus C_*$	Q	CTCH (3)	F
$C_{20}\oplus C_*$	I	APCH (3)	F
$C_{21}\oplus C_*$	Q	APCH (3)	F
$C_{22}\oplus C_*$	I	reserved	—
$C_{23}\oplus C_*$	Q	reserved	—
. . . .	. . . .	. . . .	. . . .
. . . .	. . . .	. . . .	. . . .
$C_{40}\oplus C_*$	I	reserved	—
$C_{41}\oplus C_*$	Q	reserved	—
$C_{42}\oplus C_*$	I	AXCH (3)	Reverse (R)
$C_{43}\oplus C_*$	Q	AXCH (3)	R
$C_{44}\oplus C_*$	I	LAXPT (3) SAXPT (3) seed	R
$C_{45}\oplus C_*$	Q	LAXPT (3) SAXPT (3) seed	R
$C_{46}\oplus C_*$	I	AXCH (2)	R
$C_{47}\oplus C_*$	Q	AXCH (2)	R
$C_{48}\oplus C_*$	I	LAXPT (2) SAXPT (2) seed	R
$C_{49}\oplus C_*$	Q	LAXPT (2) SAXPT (2) seed	R
$C_{50}\oplus C_*$	I	AXCH (1)	R
$C_{51}\oplus C_*$	Q	AXCH (1)	R
$C_{52}\oplus C_*$	I	LAXPT (1) SAXPT (1) seed	R
$C_{53}\oplus C_*$	Q	LAXPT (1) SAXPT (1) seed	R
$C_{54}\oplus C_*$	I	AXCH (0)	R
$C_{55}\oplus C_*$	Q	AXCH (0)	R
$C_{56}\oplus C_*$	I	LAXPT (0) SAXPT (0) seed	R
$C_{57}\oplus C_*$	Q	LAXPT (0) SAXPT (0) seed	R
$C_{58}\oplus C_*$	I	IDLE	—
$C_{59}\oplus C_*$	Q	IDLE	—
$C_{60}\oplus C_*$	I	AUX	R
$C_{61}\oplus C_*$	Q	AUX	R
$C_{62}\oplus C_*$	I	reserved	—
$C_{63}\oplus C_*$	Q	reserved	—

TABLE 5b

Spreading code sequences and assigned CDMA codes.

Sequence	Quadrature	Logical Channel or Pilot Signal	Direction
$C_0\oplus C_*$	I	ASPT	Reverse (R)
$C_1\oplus C_*$	Q	ASPT	R
$C_2\oplus C_*$	I	APCH	R
$C_3\oplus C_*$	Q	APCH	R
$C_4\oplus C_*$	I	OWCH	R
$C_5\oplus C_*$	Q	OWCH	R
$C_6\oplus C_*$	I	TRCH (0)	R
$C_7\oplus C_*$	Q	TRCH (0)	R
$C_8\oplus C_*$	I	TRCH (1)	R
$C_9\oplus C_*$	Q	TRCH (1)	R
$C_{10}\oplus C_*$	I	TRCH (2)	R
$C_{11}\oplus C_*$	Q	TRCH (2)	R
$C_{12}\oplus C_*$	I	TRCH (3)	R
$C_{13}\oplus C_*$	Q	TRCH (3)	R
$C_{14}\oplus C_*$	I	reserved	—
$C_{15}\oplus C_*$	Q	reserved	—
. . . .	. . . .	. . . .	. . . .
. . . .	. . . .	. . . .	. . . .
$C_{44}\oplus C_*$	I	reserved	—
$C_{45}\oplus C_*$	Q	reserved	—
$C_{46}\oplus C_*$	I	TRCH (3)	Forward (F)
$C_{47}\oplus C_*$	Q	TRCH (3)	F
$C_{48}\oplus C_*$	I	TRCH (2)	F
$C_{49}\oplus C_*$	Q	TRCH (2)	F

TABLE 5b-continued

Spreading code sequences and assigned CDMA codes.

Sequence	Quadrature	Logical Channel or Pilot Signal	Direction
$C_{50}\oplus C_*$	I	TRCH (1)	F
$C_{51}\oplus C_*$	Q	TRCH (1)	F
$C_{52}\oplus C_*$	I	TRCH (0)	F
$C_{53}\oplus C_*$	Q	TRCH (0)	F
$C_{54}\oplus C_*$	I	OWCH	F
$C_{55}\oplus C_*$	Q	OWCH	F
$C_{56}\oplus C_*$	I	APCH	F
$C_{57}\oplus C_*$	Q	APCH	F
$C_{58}\oplus C_*$	I	IDLE	—
$C_{59}\oplus C_*$	Q	IDLE	—
$C_{60}\oplus C_*$	I	reserved	—
$C_{61}\oplus C_*$	Q	reserved	—
$C_{62}\oplus C_*$	I	reserved	—
$C_{63}\oplus C_*$	Q	reserved	—

For global codes, the seed values for the 36 bit shift register are chosen to avoid using the same code, or any cyclic shift of the same code, within the same geographical area to prevent ambiguity or harmful interference. No assigned code is equal to, or a cyclic shift of a global code.

Pilot Signals

The pilot signals are used for synchronization, carrier phase recovery, and for estimating the impulse response of the radio channel.

The RCS **104** transmits a forward link pilot carrier reference as a complex pilot code sequence to provide time and phase reference for all SUs **111**, **112**, **115**, **117** and **118** in its service area. The power level of the Global Pilot (GLPT) signal is set to provide adequate coverage over the whole RCS service area, which area depends on the cell size With only one pilot signal in the forward link, the reduction in system capacity due to the pilot energy is negligible.

The SUs **111**, **112**, **115**, **117** and **118** each transmits a pilot carrier reference as a quadrature modulated (complex-valued) pilot spreading code sequence to provide a time and phase reference to the RCS for the reverse link. The pilot signal transmitted by the SU of one embodiment of the invention is 6 dB lower than the power of the 32 kb/s POTS traffic channel. The reverse pilot channel is subject to APC. The reverse link pilot associated with a particular connection is called the Assigned Pilot (ASPT). In addition, there are pilot signals associated with access channels. These are called the Long Access Channel Pilots (LAXPTs). Short access channel pilots (SAXPTs) are also associated with the access channels and used for spreading code acquisition and initial power ramp-up

All pilot signals are formed from complex codes, as defined below:

$$GLPT\,(\text{forward}) = \{C_2 \oplus C_*) + j\cdot\ (C_3 \oplus C_*)\}\cdot\{(1) + j\cdot(0)\}$$

{Complex Code}·{Carrier}

The complex pilot signals are de-spread by multiplication with conjugate spreading codes: $\{(C_2 \oplus C_*) - j.(C_3 \oplus C_*)\}$. By contrast, traffic channels are of the form:

$$TRCH_n \text{ (forward/reverse)} = \{(C_k \oplus C_*) + j \cdot (C_1 \oplus C_*)\} \cdot \{(\pm 1) + j(\pm 1)\} \cdot \{\text{Complex Codes}\} \cdot \{\text{Data Symbol}\}$$

which thus form a constellation set at

$$\frac{\pi}{4}$$

radians with respect to the pilot signal constellations.

The GLPT constellation is shown in FIG. **3***a*, and the $TRCH_n$ traffic channel constellation is shown in FIG. **3***b*.

Logical Channel Assignment of the FBCH, SBCH, and Traffic Channels

The FBCH is a global forward link channel used to broadcast dynamic information about the availability of services and AXCHs. Messages are sent continuously over this channel, and each message lasts approximately 1 ms. The FBCH message is 16 bits long, repeated continuously, and is epoch aligned. The FBCH is formatted as defined in Table 6.

TABLE 6

FBCH format

Bit	Definition
0	Traffic Light 0
1	Traffic Light 1
2	Traffic Light 2
3	Traffic Light 3
4–7	service indicator bits
8	Traffic Light 0
9	Traffic Light 1
10	Traffic Light 2
11	Traffic Light 3
12–15	service indicator bits

For the FBCH, bit **0** is transmitted first. As used in Table 6, a traffic light corresponds to an Access Channel (AXCH) and indicates whether the particular access channel is currently in use (a red) or not in use (a green). A logic '1' indicates that the traffic light is green, and a logic '0' indicates the traffic light is red. The values of the traffic light bits may change from octet to octet, and each 16 bit message contains distinct service indicator bits which describe the types of services that are available for the AXCHs.

One embodiment of the present invention uses service indicator bits as follows to indicate the availability of services or AXCHs. The service indicator bits {**4**,**5**,**6**,**7**,**12**, **13**,**14**,**15**} taken together may be an unsigned binary number, with bit **4** as the MSB and bit **15** as the LSB. Each service type increment has an associated nominal measure of the capacity required, and the FBCH continuously broadcasts the available capacity. This is scaled to have a maximum value equivalent to the largest single service increment possible. When an SU requires a new service or an increase in the number of bearers, it compares the capacity required to that indicated by the FBCH, and then considers itself blocked if the capacity is not available. The FBCH and the traffic channels are aligned to the epoch.

Slow Broadcast Information frames contain system or other general information that is available to all SUs and Paging Information frames contain information about call requests for particular SUs. Slow Broadcast Information frames and Paging Information frames are multiplexed together on a single logical channel which forms the Slow Broadcast Channel (SBCH). As previously defined, the code epoch is a sequence of 29 877 20 chips having an epoch duration which is a function of the chip rate defined in Table 7 below. In order to facilitate power saving, the channel is divided into N "Sleep" Cycles, and each Cycle is subdivided into M Slots, which are 19 ms long, except for 10.5 Mhz bandwidth which has slots of 18 ms.

TABLE 7

SBCH Channel Format Outline

Bandwidth (MHz)	Spreading Code Rate (MHz)	Epoch Length (ms)	Cycles/ Epoch N	Cycle Length (ms)	Slots/ Cycle M	Slot Length (ms)
7.0	5.824	5130	5	1026	54	19
10.0	8.320	3591	3	1197	63	19
10.5	8.512	3510	3	1170	65	18
14.0	11.648	2565	3	855	45	19
15.0	12.480	2394	2	1197	63	19

Sleep Cycle Slot #1 is always used for slow broadcast information. Slots #2 to #M−1 are used for paging groups unless extended slow broadcast information is inserted. The pattern of cycles and slots in one embodiment of the present invention run continuously at 16 kb/s.

Within each Sleep Cycle the SU powers-up the receiver and re-acquires the pilot code. It then achieves carrier lock to a sufficient precision for satisfactory demodulation and Viterbi decoding. The settling time to achieve carrier lock may be up to 3 Slots in duration. For example, an SU assigned to Slot #7 powers up the Receiver at the start of Slot #4. Having monitored its Slot the SU will have either recognized its Paging Address and initiated an access request, or failed to recognize its Paging Address in which case it reverts to the Sleep mode. Table 8 shows duty cycles for the different bandwidths, assuming a wake-up duration of 3 Slots.

TABLE 8

Sleep-Cycle Power Saving

Bandwidth (MHz)	Slots/Cycle	Duty Cycle
7.0	54	7.4%
10.0	63	6.3%
10.5	65	6.2%
14.0	45	8.9%
15.0	63	6.3%

Spreading code Tracking and AMF Detection in Multipath Channels

Spreading code Tracking

Three CDMA spreading code tracking methods in multipath fading environments are described which track the code phase of a received multipath spread-spectrum signal. The first is the prior art tracking circuit which simply tracks the spreading code phase with the highest detector output signal value, the second is a tracking circuit that tracks the median value of the code phase of the group of multipath signals,

and the third is the centroid tracking circuit which tracks the code-phase of an optimized, least mean squared weighted average of the multipath signal components. The following describes the algorithms by which the spreading code phase of the received CDMA signal is tracked.

A tracking circuit has operating characteristics that reveal the relationship between the time error and the control voltage that drives a Voltage Controlled Oscillator (VCO) of a spreading code phase tracking circuit. When there is a positive timing error, the tracking circuit generates a negative control voltage to offset the timing error. When there is a negative timing error, the tracking circuit generates a positive control voltage to offset the timing error. When the tracking circuit generates a zero value, this value corresponds to the perfect time alignment called the 'lock-point'. FIG. **3** shows the basic tracking circuit. Received signal r(t) is applied to matched filter **301**, which correlates r(t) with a local code-sequence c(t) generated by Code Generator **303**. The output signal of the matched filter x(t) is sampled at the sampler **302** to produce samples x[nT] and x[nT+T/2]. The samples x[nT] and x[nT+T/2] are used by a tracking circuit **304** to determine if the phase of the spreading code c(t) of the code generator **303** is correct. The tracking circuit **304** produces an error signal e(t) as an input to the code generator **303**. The code generator **303** uses this signal e(t) as an input signal to adjust the code-phase it generates.

In a CDMA system, the signal transmitted by the reference user is written in the low-pass representation as

$$s(t) = \sum_{k=-\infty}^{\infty} c_k P_{Tc}(t - kT_c) \tag{7}$$

where c_k represents the spreading code coefficients, $P_{Tc}(t)$ represents the spreading code chip waveform, and T_c is the chip duration. Assuming that the reference user is not transmitting data so that only the spreading code modulates the carrier. Referring to FIG. **3***c*, the received signal is

$$r(t) = \sum_{i=1}^{M} a_i s(t - \tau_i) \tag{8}$$

Here, a_i is due to fading effect of the multipath channel on the i-th path and τ_i is the random time delay associated with the same path. The receiver passes the received signal through a matched filter, which is implemented as a correlation receiver and is described below. This operation is done in two steps: first the signal is passed through a chip matched filter and sampled to recover the spreading code chip values, then this chip sequence is correlated with the locally generated code sequence.

FIG. **3***c* shows the chip matched filter **301**, matched to the chip waveform $P_{Tc}(i)$, and the sampler **302**. Ideally, the signal x(t) at the output terminal of the chip matched filter is

$$x(t) = \sum_{i=k}^{M} \sum_{k=-\infty}^{\infty} a_i c_k g(t - \tau_i - kT_c) \tag{9}$$

where

$$g(t) = P_{Tc}(t) * h_R(t) \tag{10}$$

Here, $h_R(t)$ is the impulse response of the chip matched filter and '*' denotes convolution. The order of the summations can be rewritten as

$$x(t) = \sum_{k=-\infty}^{\infty} c_k f(t - kT_c) \tag{11}$$

where

$$f(t) = \sum_{i=1}^{M} a_i g(t - \tau_i) \tag{12}$$

In the multipath channel described above, the sampler samples the output signal of the matched filter to produce x(nT) at the maximum power level points of g(t). In practice, however, the waveform g(t) is severely distorted because of the effect of the multipath signal reception, and a perfect time alignment of the signals is not available.

When the multipath distortion in the channel is negligible and a perfect estimate of the timing is available, i.e., a_1=1, τ_1=0, and a_i=0, i=2, . . . ,M, the received signal is r(t)=s(t). Then, with this ideal channel model, the output of the chip matched filter becomes

$$x(t) = \sum_{k=-\infty}^{\infty} c_k g(t - kT_c) \tag{13}$$

When there is multipath fading, however, the received spreading code chip value waveform is distorted, and has a number of local maxima that can change from one sampling interval to another depending on the channel characteristics.

For multipath fading channels with quickly changing channel characteristics, it is not practical to try to locate the maximum of the waveform f(t) in every chip period interval. Instead, a time reference may be obtained from the characteristics of f(t) that may not change as quickly. Three tracking methods are described based on different characteristics of f(t).

Prior Art Spreading Code Tracking Method

Prior art tracking methods include a code tracking circuit in which the receiver attempts to determine the timing of the maximum matched filter output value of the chip waveform occurs and sample the signal accordingly. However, in multipath fading channels, the receiver despread code waveform can have a number of local maxima, especially in a mobile environment. In the following, f(t) represents the received signal waveform of the spreading code chip convolved with the channel impulse response. The frequency response characteristic of f(t) and the maximum of this characteristic can change rather quickly making it impractical to track the maximum of f(t).

Define τ to be the time estimate that the tracking circuit calculates during a particular sampling interval. Also, define the following error function

$$\varepsilon = \begin{cases} \int_{[t:|\tau - t| > \delta]} f(t)dt, & |\tau - t| > \delta \\ \varepsilon = 0 & |\tau - t| < \delta \end{cases} \tag{14}$$

The tracking circuits of the prior art calculate a value of the input signal that minimizes the error ϵ. One can write

$$\min\varepsilon = 1 - \max_{\tau} \int_{\tau-\delta}^{\tau-\delta} f(t)dt \tag{15}$$

Assuming f(τ) has a smooth shape in the values given, the value of τ for which f(τ) is maximum minimizes the error ϵ, so the tracking circuit tracks the maximum point of f(t).

Median Weighted Value Tracking Method

The Median Weighted Tracking Method of one embodiment of the present invention, minimizes the absolute weighted error, defined as

$$\varepsilon = \int_{-\infty}^{\infty} |t-\tau| f(t)dt \tag{16}$$

This tracking method calculates the 'median' signal value of f(t) by collecting information from all paths, where f(τ) is as in equation 12. In a multipath fading environment, the waveform f(t) can have multiple local maxima, but only one median.

To minimize ϵ, take the derivative of equation (16) is taken with respect to τ and the result is equated to zero, which gives

$$\int_{-\infty}^{\tau} f(t)dt = \int_{\tau}^{\infty} f(t)dt \tag{17}$$

The value of τ that satisfies (17) is called the 'median' of f(t). Therefore, the Median Tracking Method of the present embodiment tracks the median of f(t). FIG. **4** shows an implementation of the tracking circuit based on minimizing the absolute weighted error defined above. The signal x(t) and its one-half chip offset version x(t+T/2) are sampled by the A/D **401** at a rate 1/T. The following equation determines the operating characteristic of the circuit in FIG. **4**:

$$\varepsilon(\tau) = \sum_{n=1}^{2L} |f(\tau - nT/2)| - |f(\tau + nT/2)| \tag{18}$$

Tracking the median of a group of multipath signals keeps the received energy of the multipath signal components substantially equal on the early and late sides of the median point of the correct locally generated spreading code phase c_n. The tracking circuit consists of an A/D **401** which samples an input signal x(t) to form the half-chip offset samples. The half chip offset samples are alternatively grouped into even samples called an early set of samples x(nT+τ) and odd samples called a late set of samples x(nT+(T/2)+τ). The first correlation bank adaptive matched filter **402** multiplies each early sample by the spreading code phases c(n+1), c(n+2), . . . , c(n+L), where L is small compared to the code length and approximately equal to number of chips of delay between the earliest and latest multipath signal. The output of each correlator is applied to a respective first sum-and-dump bank **404**. The magnitudes of the output values of the L sum-and-dumps are calculated in the calculator **406** and then summed in summer **408** to give an output value proportional to the signal energy in the early multipath signals. Similarly, a second correlation bank adaptive matched filter **403** operates on the late samples, using code phases c(n−1), c(n−2), . . . , c(n−L), and each output signal is applied to a respective sum-and-dump circuit in an integrator **405**. The magnitudes of the L sum-and-dump output signals are calculated in calculator **407** and then summed in summer **409** to give a value for the late multipath signal energy. Finally, the subtractor **410** calculates the difference and produces error signal ϵ(τ) of the early and late signal energy values.

The tracking circuit adjusts by means of error signal ϵ(τ) the locally generated code phases c(t) to cause the difference between the early and late values to tend toward 0.

Centroid Tracking Method

The optimal spreading code tracking circuit of one embodiment of the present invention is called the squared weighted tracking (or centroid) circuit. Defining τ to denote the time estimate that the tracking circuit calculates, based on some characteristic of f(t), the centroid tracking circuit minimizes the squared weighted error defined as

$$\varepsilon = \int_{-\infty}^{\infty} |t-\tau|^2 f(t)dt \tag{19}$$

This function inside the integral has a quadratic form, which has a unique minimum. The value of τ that minimizes ϵ can be found by taking the derivative of the above equation with respect to τ and equating to zero, which gives

$$\int_{-\infty}^{\infty} (-2t + 2\tau) f(t)dt = 0 \tag{20}$$

Therefore, the value of τ that satisfies equation (21)

$$\tau - \frac{1}{\beta}\int_{-\infty}^{\infty} tf(t)dt = 0 \tag{21}$$

is the timing estimate that the tracking circuit calculates, where β is a constant value.

Based on these observations, a realization of an exemplary tracking circuit which minimizes the squared weighted error is shown in FIG. **5***a*. The following equation determines the error signal ϵ(τ) of the centroid tracking circuit:

$$\varepsilon(\tau) = \sum_{n=1}^{2L} n[|f(\tau - nT/2)| - |f(\tau + nT/2)|] = 0 \tag{22}$$

The value that satisfies ϵ(τ)=0 is the perfect estimate of the timing.

The early and late multipath signal energy on each side of the centroid point are equal. The centroid tracking circuit shown in FIG. **5***a* consists of an A/D converter **501** which samples an input signal x(t) to form the half-chip offset samples. The half chip offset samples are alternatively grouped as an early set of samples x(nT+τ) and a late set of samples x(nT+(T/2)+τ). The first correlation bank adaptive matched filter **502** multiplies each early sample and each late sample by the positive spreading code phases c(n+1), c(n+2), . . . , c(n+L), where L is small compared to the code length and approximately equal to number of chips of delay between the earliest and latest multipath signal. The output signal of each correlator is applied to a respective one of L sum-and-dump circuits of the first sum and dump bank **504**. The magnitude value of each sum-and-dump circuit of the sum and dump bank **504** is calculated by the respective

calculator in the calculator bank **506** and applied to a corresponding weighting amplifier of the first weighting bank **508**. The output signal of each weighting amplifier represents the weighted signal energy in a multipath component signal.

The weighted early multipath signal energy values are summed in sample adder **510** to give an output value proportional to the signal energy in the group of multipath signals corresponding to positive code phases which are the early multipath signals. Similarly, a second correlation bank adaptive matched filter **503** operates on the early and late samples, using the negative spreading code phases c(n−1), c(n−2), . . . , c(n−L); each output signal is provided to a respective sum-and-dump circuit of discrete integrator **505**. The magnitude value of the L sum-and-dump output signals are calculated by the respective calculator of calculator bank **507** and then weighted in weighting bank **509**. The weighted late multipath signal energy values are summed in sample adder **511** to give an energy value for the group of multipath signals corresponding to the negative code phases which are the late multipath signals. Finally, the adder **512** calculates the difference of the early and late signal energy values to produce error sample value $\epsilon\tau$).

The tracking circuit of FIG. **5***a* produces error signal $\epsilon(\tau)$ which is used to adjust the locally generated code phase c(nT) to keep the weighted average energy in the early and late multipath signal groups equal. The embodiment shown uses weighting values that increase as the distance from the centroid increases. The signal energy in the earliest and latest multipath signals is probably less than the multipath signal values near the centroid. Consequently, the difference calculated by the adder **510** is more sensitive to variations in delay of the earliest and latest multipath signals.

Quadratic Detector for Tracking

In the new embodiment of the tracking method, the tracking circuit adjusts sampling phase to be "optimal" and robust to multipath. Let f(t) represent the received signal waveform as in equation 12 above. The particular method of optimizing starts with a delay locked loop with an error signal $\epsilon(\tau)$ that drives the loop. The function $\epsilon(\tau)$ must have only one zero at $\tau=\tau_0$ where τ_0 is optimal. The optimal form for $\epsilon(\tau)$ has the canonical form:

$$\varepsilon(\tau) = \int_{-\infty}^{\infty} w(t, \tau)|f(t)|^2 dt \tag{23}$$

where w(t, τ) is a weighting function relating f(t) to the error $\epsilon(\tau)$, and the relationship indicated by equation (24) also holds

$$\varepsilon(\tau + \tau_0) = \int_{-\infty}^{\infty} w(t, \tau + \tau_0)|f(t)|^2 dt \tag{24}$$

It follows from equation (24) that w(t, τ) is equivalent to w(t−τ). Considering the slope M of the error signal in the neighborhood of a lock point τ_0:

$$M = \left.\frac{d\varepsilon(\tau)}{d\tau}\right|_{\tau_0} = -\int_{-\infty}^{\infty} w'(t - \tau_0)g(t)dt \tag{25}$$

where w'(t, τ) is the derivative of w(t, τ) with respect to τ, and g(t) is the average of $|f(t)|^2$.

The error $\epsilon(\tau)$ has a deterministic part and a noise part. Let z denote the noise component in $\epsilon(\tau)$, then $|z|^2$ is the average noise power in the error function $\epsilon(\tau)$. Consequently, the optimal tracking circuit maximizes the ratio

$$F = \frac{M^2}{|z|^2} \tag{26}$$

The implementation of the Quadratic Detector is now described. The discrete error value e of an error signal $\epsilon(\tau)$ is generated by performing the operation

$$e=y^T By \tag{27}$$

where the vector y represents the received signal components yi, i=0, 1, . . . L−1, as shown in FIG. **5***b*. The matrix B is an L by L matrix and the elements are determined by calculating values such that the ratio F of equation (26) is maximized.

The Quadratic Detector described above may be used to implement the centroid tracking system described above with reference to FIG. **5***a*. For this implementation, the vector y is the output signal of the sum and dump circuits **504**:

$$y=\{f(\tau-LT), f(\tau LT+T/2), f(\tau-(L-1)T), \ldots f(\tau), f(\tau+T/2), f(\tau+T), \ldots f(\tau+LT)\}$$

and the matrix B is set forth in table 9.

TABLE 9

B matrix for quadratic form of Centroid Tracking System

L	0	0	0	0	0	0	0	0	0	0
0	L − ½	0	0	0	0	0	0	0	0	0
0	0	L − 1	0	0	0	0	0	0	0	0
⋮	⋮	⋮	⋱	⋮	⋮	⋮	⋮	⋮	⋮	⋮
0	0	0	0	½	0	0	0	0	0	0
0	0	0	0	0	0	0	0	0	0	0
0	0	0	0	0	0	−½	0	0	0	0
⋮	⋮	⋮	⋮	⋮	⋮	⋮	⋱	⋮	⋮	⋮
0	0	0	0	0	0	0	0	−L + 1	0	0
0	0	0	0	0	0	0	0	0	−L + ½	0
0	0	0	0	0	0	0	0	0	0	−L

Determining the Minimum Value of L needed:

The value of L in the previous section determines the minimum number of correlators and sum-and-dump elements. L is chosen as small as possible without compromising the functionality of the tracking circuit.

The multipath characteristic of the channel is such that the received chip waveform f(t) is spread over QT_c seconds, or the multipath components occupy a time period of Q chips duration. The value of L chosen is L=Q. Q is found by measuring the particular RF channel transmission characteristics to determine the earliest and latest multipath component signal propagation delay. QT_c is the difference between the earliest and latest multipath component arrival time at a receiver.

Adaptive Vector Correlator

An embodiment of the present invention uses an adaptive vector correlator (AVC) to estimate the channel impulse response and to obtain a reference value for coherent combining of received multipath signal components. The described embodiment employs an array of correlators to

estimate the complex channel response affecting each multipath component. The receiver compensates for the channel response and coherently combines the received multipath signal components. This approach is referred to as maximal ratio combining.

Referring to FIG. **6**, the input signal x(t) to the system includes interference noise of other message channels, multipath signals of the message channels, thermal noise, and multipath signals of the pilots signal. The signal is provided to AVC **601** which, in the exemplary embodiment, includes a despreading means **602**, channel estimation means for estimating the channel response **604**, correction means for correcting a signal for effects of the channel response **603**, and adder **605**. The AVC despreading means **602** is composed of multiple code correlators, with each correlator using a different phase of the pilot code c(t) provided by the pilot code generator **608**. The output signal of this despreading means corresponds to a noise power level if the local pilot code of the despreading means is not in phase with the input code signal. Alternatively, it corresponds to a received pilot signal power level plus noise power level if the phases of the input pilot code and locally generated pilot code are the same. The output signals of the correlators of the despreading means are corrected for the channel response by the correction means **603** and are applied to the adder **605** which collects all multipath pilot signal power. The channel response estimation means **604** receives the combined pilot signal and the output signals of the despreading means **602**, and provides a channel response estimate signal, w(t), to the correction means **603** of the AVC, and the estimate signal w(t) is also available to the adaptive matched filter (AMF) described below. The output signal of the despreading means **602** is also provided to the acquisition decision means **606** which decides, based on a particular algorithm such as a sequential probability ratio test (SPRT), if the present output levels of the despreading circuits correspond to synchronization of the locally generated code to the desired input code phase. If the detector finds no synchronization, then the acquisition decision means sends a control signal a(t) to the local pilot code generator **608** to offset its phase by one or more chip period. When synchronization is found, the acquisition decision means informs tracking circuit **607**, which achieves and maintains a close synchronization between the received and locally generated code sequences.

An exemplary implementation of the Pilot AVC used to despread the pilot spreading code is shown in FIG. **7**. The described embodiment assumes that the input signal x(t) has been sampled with sampling period T to form samples x(nT+τ), and is composed of interference noise of other message channels, multipath signals of message channels, thermal noise, and multipath signals of the pilot code. The signal x(nT+τ) is applied to L correlators, where L is the number of code phases over which the uncertainty within the multipath signals exists. Each correlator **701**, **702**, **703** comprises a multiplier **704**, **705**, **706**, which multiples the input signal with a particular phase of the Pilot spreading code signal c((n+i)), and sum-and-dump circuits **708**, **709**, **710**. The output signal of each multiplier **704**, **705**, **706** is applied to a respective sum-and dump circuit **708**, **709**, **710** to perform discrete integration. Before summing the signal energy contained in the outputs of the correlators, the AVC compensates for the channel response and the carrier phase rotation of the different multipath signals. Each output of each sum-and-dump **708**, **709**, **710** is multiplied with a derotation phaser [complex conjugate of ep(nT)] from digital phase lock loop (DPLL) **721** by the respective multiplier **714**, **715**, **716** to account for the phase and frequency offset of the carrier signal. The Pilot Rake AMP calculates the weighting factors wk, k=1, . . . , L, for each multipath signal by passing the output of each multiplier **714**, **715**, **716** through a low pass filter (LPF) **711**, **712**, **713**. Each despread multipath signal is multiplied by its corresponding weighting factor in a respective multiplier **717**, **718**, **719**. The output signals of the multipliers **717**, **718**, **719** are summed in a master adder **720**, and the output signal p(nT) of the accumulator **720** consists of the combined despread multipath pilot signals in noise. The output signal p(nT) is also input to the DPLL **721** to produce the error signal ep(nT) for tracking of the carrier phase.

FIGS. **8***a* and **8***b* show alternate embodiments of the AVC which can be used for detection and multipath signal component combining. The message signal AVCs of FIGS. **8***a* and **8***b* use the weighting factors produced by the Pilot AVC to correct the message data multipath signals. The spreading code signal, c(nT) is the spreading code spreading sequence used by a particular message channel and is synchronous with the pilot spreading code signal The value L is the number of correlators in the AVC circuit.

The circuit of FIG. **8***a* calculates the decision variable Z which is given by

$$Z = w_1\sum_{i=1}^{N} x(iT+\tau)c(iT) + w_2\sum_{i=1}^{N} x(iT+\tau)c((i+1)T) + \cdots + w_L\sum_{i=1}^{L} x(iT+\tau) + c((i+L)T) \tag{28}$$

where N is the number of chips in the correlation window. Equivalently, the decision statistic is given by

$$Z = x(T+\tau)\sum_{i=1}^{L} w_1 c(iT) + x(2T+\tau)\sum_{i=1}^{L} w_1 c((i+1)T) + \cdots + x(NT+\tau)\sum_{i=1}^{L} w_N c((i+N)T) = \sum_{k=1}^{N} x(kT-\tau)\sum_{i=1}^{L} w_k c((i+k-1)T) \tag{29}$$

The alternative implementation that results from equation (29) is shown in FIG. **8***b*.

Referring to FIG. **8***a*, the input signal x(t) is sampled to form x(nT+τ), and is composed of interference noise of other message channels, multipath signals of message channels, thermal noise, and multipath signals of the pilot code. The signal x(nT+τ) is applied to L correlators, where L is the number of code phases over which the uncertainty within the multipath signals exists. Each correlator **801**, **802**, **803** comprises a multiplier **804**, **805**, **806**, which multiples the input signal by a particular phase of the message channel spreading code signal, and a respective sum-and-dump circuit **808**, **809**, **810**. The output signal of each multiplier **804**, **805**, **806** is applied to a respective sum-and dump circuit **808**, **809**, **810** which performs discrete integration. Before summing the signal energy contained in the output signals of the correlators, the AVC compensates for the different multipath signals. Each despread multipath signal and its corresponding weighting factor, which is obtained from the corresponding multipath weighting factor of the pilot AVC, are multiplied in a respective multiplier **817**, **818**, **819**. The output signals of multipliers **817**, **818**, **819** are summed in a master adder **820**, and the output signal z(nT) of the accu-

mulator **820** consists of sampled levels of a despread message signal in noise.

The alternative embodiment of the invention includes a new implementation of the AVC despreading circuit for the message channels which performs the sum-and-dump for each multipath signal component simultaneously. The advantage of this circuit is that only one sum-and dump circuit and one adder is necessary. Referring to FIG. **8***b*, the message code sequence generator **830** provides a message code sequence to shift register **831** of length L. The output signal of each register **832, 833, 834, 835** of the shift register **831** corresponds to the message code sequence shifted in phase by one chip. The output value of each register **832, 833, 834, 835** is multiplied in multipliers **836, 837, 838, 839** with the corresponding weighting factor W_k, k=1, . . . , L obtained from the Pilot AVC. The output signals of the L multipliers **836, 837, 838, 839** are summed by the adding circuit **840**. The adding circuit output signal and the receiver input signal $x(nT+\tau)$ are then multiplied in the multiplier **841** and integrated by the sum-and-dump circuit **842** to produce message signal z(nT).

A third embodiment of the adaptive vector correlator is shown in FIG. **8***c*. The embodiment shown uses the least mean square (LMS) statistic to implement the vector correlator and determines the derotation factors for each multipath component from the received multipath signal. The AVC of FIG. **8***c* is similar to the exemplary implementation of the Pilot AVC used to despread the pilot spreading code shown in FIG. **7**. The digital phase locked loop **721** is replaced by the phase locked loop **850** having voltage controlled oscillator **851**, loop filter **852**, limiter **853**, and imaginary component separator **854**. The difference between the corrected despread output signal dos and an ideal despread output signal is provided by adder **855**, and the difference signal is a despread error value ide which is further used by the derotation circuits to compensate for errors in the derotation factors.

In a multipath signal environment, the signal energy of a transmitted symbol is spread out over the multipath signal components. The advantage of multipath signal addition is that a substantial portion of signal energy is recovered in an output signal from the AVC. Consequently, a detection circuit has an input signal from the AVC with a higher signal-to-noise ratio (SNR), and so can detect the presence of a symbol with a lower bit-error ratio (BER). In addition, measuring the output of the AVC is a good indication of the transmit power of the transmitter, and a good measure of the system's interference noise.

Adaptive Matched Filter

One embodiment of the current invention includes an Adaptive Matched Filter (AMF) to optimally combine the multipath signal components in a received spread spectrum message signal. The AMP is a tapped delay line which holds shifted values of the sampled message signal and combines these after correcting for the channel response. The correction for the channel response is done using the channel response estimate calculated in the AVC which operates on the Pilot sequence signal. The output signal of the AMF is the combination of the multipath components which are summed to give a maximum value. This combination corrects for the distortion of multipath signal reception. The various message despreading circuits operate on this combined multipath component signal from the AMF.

FIG. **8***d* shows an exemplary embodiment of the AMF. The sampled signal from the A/D converter **870** is applied to the L-stage delay line **872**. Each stage of this delay line **872** holds the signal corresponding to a different multipath signal component. Correction for the channel response is applied to each delayed signal component by multiplying the component in the respective multiplier of multiplier bank **874** with the respective weighting factor $w_1, w_2, \ldots, W_L$ from the AVC corresponding to the delayed signal component. All weighted signal components are summed in the adder **876** to give the combined multipath component signal y(t).

The combined multipath component signal y(t) does not include the correction due to phase and frequency offset of the carrier signal. The correction for the phase and frequency offset of the carrier signal is made to y(t) by multiplying y(t) with carrier phase and frequency correction (derotation phasor) in multiplier **878**. The phase and frequency correction is produced by the AVC as described previously. FIG. **8***d* shows the correction as being applied before the despreading circuits **880**, but alternate embodiments of the invention can apply the correction after the despreading circuits.

Method to Reduce Re-Acquisition Time with Virtual Location

One consequence of determining the difference in code phase between the locally generated pilot code sequence and a received spreading code sequence is that an approximate value for the distance between the base station and a subscriber unit can be calculated. If the SU has a relatively fixed position with respect to the RCS of the base station, the uncertainty of received spreading code phase is reduced for subsequent attempts at re-acquisition by the SU or RCS. The time required for the base station to acquire the access signal of a SU that has gone "off-hook" contributes to the delay between the SU going off-hook and the receipt of a dial tone from the PSTN. For systems that require a short delay, such as 150 msec for dial tone after off-hook is detected, a method which reduces the acquisition and bearer channel establishment time is desirable. One embodiment of the present invention uses such a method of reducing re-acquisition by use of virtual locating. Additional details of this technique are described in U.S. Patent Application entitled "VIRTUAL LOCATING OF A FIXED SUBSCRIBER UNIT TO REDUCE RE-ACQUISITION TIME" filed on even date herewith and incorporated herein by reference.

The RCS acquires the SU CDMA signal by searching only those received code phases corresponding to the largest propagation delay of the particular system. In other words, the RCS assumes that all SUs are at a predetermined, fixed distance from the RCS. The first time the SU establishes a channel- with the RCS, the normal search pattern is performed by the RCS to acquire the access channel. The normal method starts by searching the code phases corresponding to the longest possible delay, and gradually adjusts the search to the code phases with the shortest possible delay. However, after the initial acquisition, the SU can calculate the delay between the RCS and the SU by measuring the time difference between sending a short access message to the RCS and receiving an acknowledgment message, and using the received Global Pilot channel as a timing reference. The SU can also receive the delay value by having the RCS calculate the round trip delay difference from the code phase difference between the Global Pilot code generated at the RCS and the received assigned pilot sequence from the SU, and then sending the SU the value on a predetermined control channel. Once the round trip delay is known to the SU, the SU may adjust the code phase of the locally generated assigned pilot and spreading code sequences by adding the delay required to make the SU appear to the RCS to be at the predetermined fixed distance from the RCS. Although the method is explained for the

largest delay, a delay corresponding to any predetermined location in the system can be used.

A second advantage of the method of reducing re-acquisition by virtual locating is that a conservation in SU power use can be achieved. Note that a SU that is "powered down" or in a sleep mode needs to start the bearer channel acquisition process with a low transmit power level and ramp-up power until the RCS can receive its signal in order to minimize interference with other users. Since the subsequent re-acquisition time is shorter, and because the SU's location is relatively fixed in relation to the RCS, the SU can ramp-up transmit power more quickly because the SU will wait a shorter period of time before increasing transmit power. The SU waits a shorter period because it knows, within a small error range, when it should receive a response from the RCS if the RCS has acquired the SU signal.

The Spread Spectrum Communication System

The Radio Carrier Station (RCS)

The Radio Carrier Station (RCS) of the present invention acts as a central interface between the SU and the remote processing control network element, such as a Radio Distribution Unit (RDU). The interface to the RDU of the present embodiment follows the G.704 standard and an interface according to a modified version of DECT V5.1, but the present invention can support any interface that can exchange call control and traffic channels. The RCS receives information channels from the RDU including call control data, and traffic channel data such as, but not limited to, 32 kb/s ADPCM, 64 kb/s PCM, and ISDN, as well as system configuration and maintenance data. The RCS also terminates the CDMA radio interface bearer channels with SUs, which channels include both control data, and traffic channel data. In response to the call control data from either the RDU or a SU, the RCS allocates traffic channels to bearer channels on the RF communication link and establishes a communication connection between the SU and the telephone network through an RDU.

As shown in FIG. **9**, the RCS receives call control and message information data into the MUXs **905**, **906** and **907** through interface lines **901**, **902** and **903**. Although E1 format is shown, other similar telecommunication formats can be supported in the same manner as described below. The MUXs shown in FIG. **9** may be implemented using circuits similar to that shown in FIG. **10**. The MUX shown in FIG. **10** includes system clock signal generator **1001** consisting of phase locked oscillators (not shown) which generate clock signals for the Line PCM highway **1002** (which is part of PCM Highway **910**), and high speed bus (HSB) **970**; and the MUX Controller **1010** which synchronizes the system clock **1001** to interface line **1004**. It is contemplated that the phase lock oscillators can provide timing signals for the RCS in the absence of synchronization to a line. The MUX Line Interface **1011** separates the call control data from the message information data. Referring to FIG. **9**, each MUX provides a connection to the Wireless Access Controller (WAC) **920** through the PCM highway **910**. The MUX controller **1010** also monitors the presence of different tones present in the information signal by means of tone detector **1030**.

Additionally, the MUX Controller **1010** provides the ISDN D channel network signaling locally to the RDU. The MUX line interface **1011**, such as a FALC **54**, includes an E1 interface **1012** which consists of a transmit connection pair (not shown) and a receive connection pair (not shown) of the MUX connected to the RDU or Central Office (CO) ISDN Switch at the data rate of 2.048 Mbps. The transmit and receive connection pairs are connected to the E1 interface **1012** which translates differential tri-level transmit/receive encoded pairs into levels for use by the Framer **1015**. The line interface **1011** uses internal phase-locked-loops (not shown) to produce E1-derived 2.048 MHz, and 4.096 MHz clocks as well as an 8 KHz frame-sync pulse. The line interface can operate in clock-master or clock-slave mode. While the exemplary embodiment is shown as using an E1 Interface, it is contemplated that other types of telephone lines which convey multiple calls may be used, for example, T1 lines or lines which interface to a Private Branch Exchange (PBX).

The line interface framer **1015** frames the data streams by recognizing the framing patterns on channel-1 (time-slot 0) of the incoming line, and inserts and extracts service bits, generates/checks line service quality information.

As long as a valid E1 signal appears at the E1 Interface **1012**, the FALC **54**, recovers a 2.048 MHz PCM clock signal from the E1 line. This clock, via System Clock **1001**, is used system wide as a PCM Highway Clock signal. If the E1 Line fails, the FALC **54** continues to deliver a PCM Clock derived from an oscillator signal o(t) connected to the sync input (not shown) of the FALC **54**. This PCM Clock serves the RCS system until another MUX with an operational E1 line assumes responsibility for generating the system clock signals.

The framer **1015** generates a Received Frame Sync Pulse, which in turn can be used to trigger the PCM Interface **1016** to transfer data onto the line PCM Highway **1002** and into the RCS System for use by other elements. Since all E1 lines are frame synchronized, all Line PCM Highways are also frame synchronized. From this 8 kHz PCM Sync pulse, the system clock signal generator **1001** of the MUX uses a Phase Locked Loop (not shown) to synthesize the PNx2 clock [e.g., 15.96 MHz)(W_0(t)]. The frequency of this clock signal is different for different transmission bandwidths, as described in Table 7.

The MUX includes a MUX Controller **1010**, such as a 25 MHz Quad Integrated Communications Controller, containing a microprocessor **1020**, program memory **1021**, and Time Division Multiplexer (TDM) **1022**. The TDM **1022** is coupled to receive the signal provided by the Framer **1015**, and extracts information placed in time slots 0 and 16. The extracted information governs how the MUX controller **1010** processes the Link- Access Protocol-D (LAPD) data link. The call control and bearer modification messages, such as those defined as V5.1 Network layer messages, are either passed to the WAC, or used locally by the MUX controller **1010**.

The RCS Line PCM Highway **1002** is connected to and originates with the Framer **1015** through PCM Interface **1016**, and comprises of a 2.048 MHz stream of data in both the transmit and receive direction. The RCS also contains a High Speed Bus (HSB) **970** which is the communication link between the MUX, WAC, and MIUs. The HSB **970** supports a data rate of, for example, 100 Mbit/sec. Bach of the MUX, WAC, and MIU access the HSB using arbitration. The RCS of the present invention also can include several MUXs requiring one board to be a "master" and the rest "slaves". Details on the implementation of the HSB may be found in a U.S. patent application entitled PARALLEL PACKETIZED INTERMODULE ARBITRATED HIGH SPEED CONTROL AND DATA BUS, filed on even date herewith, which is hereby incorporated by reference.

Referring to FIG. **9**, the Wireless Access Controller (WAC) **920** is the RCS system controller which manages call control functions and interconnection of data streams between the MUXs **905**, **906**, **907**, Modem Interface Units (MIUs) **931**, **932**, **933**. The WAC **920** also controls and monitors other RCS elements such as the VDC **940**, RF **950**, and Power Amplifiers **960**. The WAC **920** as shown in FIG. **11**, allocates bearer channels to the modems on each MIU **931**, **932**, **933** and allocates the message data on line PCM Highway **910** from the MUXs **905**, **906**, **907** to the modems on the MIUs **931**, **932**, **933**. This allocation is made through the System PCM Highway **911** by means of a time slot interchange on the WAC **920**. If more than one WAC is present for redundancy purposes, the WACs determines the Master-Slave relationship with a second WAC. The WAC **920** also generates messages and paging information responsive to call control signals from the MUXs **905**, **906**, **907** received from a remote processor, such as an RDU; generates Broadcast Data which is transmitted to the MIU master modem **934**; and controls the generation by the MIU MM **934** of the Global system Pilot spreading code sequence. The WAC **920** also is connected to an external Network Manager (NM) **980** for craftperson or user access.

Referring to FIG. **11**, the WAC includes a time-slot interchanger (TSI) **1101** which transfers information from one time slot in a Line PCM Highway or System PCM Highway to another time slot in either the same or different Line PCM Highway or System PCM Highway. The TSI **1101** is connected to the WAC controller **1111** of FIG. **11** which controls the assignment or transfer of information from one time slot to another time slot and stores this information in memory **1120**. The exemplary embodiment of the invention has four PCM Highways **1102**, **1103**, **1104**, **1105** connected to the TSI. The WAC also is connected to the HSB **970**, through which WAC communicates to a second WAC (not shown), to the MUXs and to the MIUs.

Referring to FIG. **11**, the WAC **920** includes a WAC controller **1111** employing, for example, a microprocessor **1112**, such as a Motorola MC68040 and a communications processor **1113**, such as the Motorola MC68360 QUICC communications processor, and a clock oscillator **1114** which receives a clock synch signal wo(t) from the system clock generator. The clock generator is located on a MUX (not shown) to provide timing to the WAC controller **1111**. The WAC controller **1111** also includes memory **1120** including Flash Prom **1121** and SRAM memory **1122**. The Flash Prom **1121** contains the program code for the WAC controller **1111**, and is reprogrammable for new software programs downloaded from an external source. The SRAM **1122** is provided to contain the temporary data written to and read from memory **1120** by the WAC controller **1111**.

A low speed bus **912** is connected to the WAC **920** for transferring control and status signals between the RF Transmitter/Receiver **950**, VDC **940**, RF **950** and Power Amplifier **960** as shown in FIG. **9**. The control signals are sent from the WAC **920** to enable or disable the RF Transmitters/Receiver **950** or Power amplifier **960**, and the status signals are sent from the RF Transmitters/Receiver **950** or Power amplifier **960** to monitor the presence of a fault condition.

Referring to FIG. **9**, the exemplary RCS contains at least one MIU **931**, which is shown in FIG. **12** and now described in detail. The MIU of the exemplary embodiment includes six CDMA modems, but the invention is not limited to this number of modems. The MIU includes a System PCM Highway **1201** connected to each of the CDMA Modems **1210**, **1211**, **1212**, **1215** through a PCM Interface **1220**, a Control Channel Bus **1221** connected to MIU controller **1230** and each of the CDMA Modems **1210**, **1211**, **1212**, **1213**, an MIU clock signal generator (CLK) **1231**, and a modem output combiner **1232**. The MIU provides the RCS with the following functions: the MIU controller receives CDMA Channel Assignment Instructions from the WAC and assigns a modem to a user information signal which is applied to the line interface of the MUX and a modem to receive the CDMA channel from the SU; it also combines the CDMA Transmit Modem Data for each of the MIU CDMA modems; multiplexes I and Q transmit message data from the CDMA modems for transmission to the VDC; receives Analog I and Q receive message data from the VDC; distributes the I and Q data to the CDMA modems; transmits and receives digital AGC Data; distributes the AGC data to the CDMA modems; and sends MIU Board Status and Maintenance Information to the WAC **920**.

The MIU controller **1230** of the exemplary embodiment of the present invention contains one communication microprocessor **1240**, such as the MC68360 "QUICC" Processor, and includes a memory **1242** having a Flash Prom memory **1243** and a SRAM memory **1244**. Flash Prom **1243** is provided to contain the program code for the Microprocessors **1240**, and the memory **1243** is downloadable and reprogrammable to support new program versions. SRAM **1244** is provided to contain the temporary data space needed by the MC68360 Microprocessor **1240** when the MIU controller **1230** reads or writes data to memory

The MIU CLK circuit **1231** provides a timing signal to the MIU controller **1230**, and also provides a timing signal to the CDMA modems. The MW CLK circuit **1231** receives and is synchronized to the system clock signal wo(t). The controller clock signal generator **1213** also receives and synchronizes to the spreading code clock signal pn(t) which is distributed to the CDMA modems **1210**, **1211**, **1212**, **1215** from the MUX.

The RCS of the present embodiment includes a System Modem **1210** contained on one MIU. The System Modem **1210** includes a Broadcast spreader (not shown) and a Pilot Generator (not shown). The Broadcast Modem provides the broadcast information used by the exemplary system, and the broadcast message data is transferred from the MIU controller **1230** to the System Modem **1210**. The System Modem also includes four additional modems (not shown) which are used to transmit the signals CT1 through CT4 and AX1 through AX4. The System Modem **1210** provides unweighted I and Q Broadcast message data signals which are applied to the VDC. The VDC adds the Broadcast message data signal to the MIU CDMA Modem Transmit Data of all CDMA modems **1210**, **1211**, **1212**, **1215**, and the Global Pilot signal.

The Pilot Generator (PG) **1250** provides the Global Pilot signal which is used by the present invention, and the Global Pilot signal is provided to the CDMA modems **1210**, **1211**, **1212**, **1215** by the MIU controller **1230**. However, other embodiments of the present invention do not require the MW controller to generate the Global Pilot signal, but include a Global Pilot signal generated by any form of CDMA Code Sequence generator. In the described embodiment of the invention, the unweighted I and Q Global Pilot signal is also sent to the VDC where it is assigned a weight, and added to the MIU CDMA Modem transmit data and Broadcast message data signal.

System timing in the RCS is derived from the E1 interface. There are four MUXs in an RCS, three of which (**905**, **906** and **907**) are shown in FIG. **9**. Two MUXs are located

on each chassis. One of the two MUXs on each chassis is designated as the master, and one of the masters is designated as the system master. The MUX which is the system master derives a 2.048 Mhz PCM clock signal from the E1 interface using a phase locked loop (not shown). In turn, the system master MUX divides the 2.048 Mhz PCM clock signal in frequency by 16 to derive a 128 KHz reference clock signal. The 128 KHz reference clock signal is distributed from the MUX that is the system master to all the other MUXs. In turn, each MUX multiplies the 128 KHz reference clock signal in frequency to synthesize the system clock signal which has a frequency that is twice the frequency of the PN-clock signal. The MUX also divides the 128 KHz clock signal in frequency by 16 to generate the 8 KHz frame synch signal which is distributed to the MIUs. The system clock signal for the exemplary embodiment has a frequency of 11.648 Mhz for a 7 MHz bandwidth CDMA channel Each MUX also divides the system clock signal in frequency by 2 to obtain the PN-clock signal and further divides the PN-clock signal in frequency by 29 877 120 (the PN sequence length) to generate the PN-synch signal which indicates the epoch boundaries. The PN-synch signal from the system master MUX is also distributed to all MUXs to maintain phase alignment of the internally generated clock signals for each MUX. The PN-synch signal and the frame synch signal are aligned. The two MUXs that are designated as the master MUXs for each chasis then distribute both the system clock signal and the PN-clock signal to the MIUs and the VDC.

The PCM Highway Interface **1220** connects the System PCM Highway **911** to each CDMA Modem **1210**, **1211**, **1212**, **1215**. The WAC controller transmits Modem Control information, including traffic message control signals for each respective user information signal, to the MIU controller **1230** through the HSB **970**. Each CDMA Modem **1210**, **1211**, **1212**, **1215** receives a traffic message control signal, which includes signaling information, from the MIU controller **1111**. Traffic message control signals also include call control (CC) information and spreading code and despreading code sequence information.

The MIU also includes the Transmit Data Combiner **1232** which adds weighted CDMA modem transmit data including In-phase (I) and Quadrature (Q) modem transmit data from the CDMA modems **1210**, **1211**, **1212**, **1215** on the MIU. The I modem transmit data is added separately from the Q modem transmit data. The combined I and Q modem transmit data output signal of the Transmit Data Combiner **1232** is applied to the I and Q multiplexer **1233** that creates a single CDMA transmit message channel composed of the I and Q modem transmit data multiplexed into a digital data stream.

The Receiver Data Input Circuit (RDI) **1234** receives the Analog Differential I and Q Data from the Video Distribution Circuit (VDC) **940** shown in FIG. **9** and distributes Analog Differential I and Q Data to each of the CDMA Modems **1210**, **1211**, **1212**, **1215** of the MIU. The Automatic Gain Control Distribution Circuit (AGC) **1235** receives the AGC Data signal from the VDC and distributes the AGC Data to each of the CDMA Modems of the MIU. The TRL circuit **1233** receives the Traffic lights information and similarly distributes the Traffic light data to each of the Modems **1210**, **1211**, **1212**, **1215**.

The CDMA Modem

The CDMA modem provides for generation of CDMA spreading code sequences and synchronization between transmitter and receiver. It also provides four full duplex channels (TR**0**, TR**1**, TR**2**, TR**3**) programmable to 64, 32, 16, and 8 ksym/sec. each, for spreading and transmission at a specific power level. The CDMA modem measures the received signal strength to allow Automatic Power Control, it generates and transmits pilot signals, and encodes and decodes using the signal for forward error correction (FEC). The modem in an SU also performs transmitter spreading code pulse shaping using an FIR filter. The CDMA modem is also used by the Subscriber Unit (SU), and in the following discussion those features which are used only by the SU are distinctly pointed out. The operating frequencies of the CDMA modem are given in Table 10.

TABLE 10

Operating Frequencies			
Bandwidth (MHz)	Chip Rate (MHz)	Symbol Rate (KHz)	Gain (Chips/Symbol)
7	5.824	64	91
10	8.320	64	130
10.5	8.512	64	133
14	11.648	64	182
15	12.480	64	195

Each CDMA modem **1210**, **1211**, **1212**, **1215** of FIG. **12**, and as shown in FIG. **13**, is composed of a transmit section **1301** and a receive section **1302**. Also included in the CDMA modem is a control center **1303** which receives control messages CNTRL from the external system. These messages are used, for example, to assign particular spreading codes, activate the spreading or despreading, or to assign transmission rates. In addition, the CDMA modem has a code generator means **1304** used to generate the various spreading and despreading codes used by the CDMA modem. The transmit section **1301** is for transmitting the input information and control signals $m_i(t)$, i=1,2, . . . I as spread-spectrum processed user information signals $sc_j(t)$, j=1,2, . . . J. The transmit section **1301** receives the global pilot code from the code generator **1304** which is controlled by the control means **1303**. The spread spectrum processed user information signals are ultimately added to other similar processed signals and transmitted as CDMA channels over the CDMA RF forward message link, for example to the SUs. The receive section **1302** receives CDMA channels as r(t) and despreads and recovers the user information and control signals $rc_k(t)$, k=1,2, . . . K transmitted over the CDMA RF reverse message link, for example to the RCS from the SUs.

CDMA Modem Transmitter Section

Referring to FIG. **14**, the code generator means **1304** includes Transmit Timing Control Logic **1401** and spreading code PN-Generator **1402**, and the Transmit Section **1301** includes Modem Input Signal Receiver (MISR) **1410**, Convolution Encoders **1411**, **1412**, **1413**, **1414**, Spreaders **1420**, **1421**, **1422**, **1423**, **1424**, and Combiner **1430**. The Transmit Section **1301** receives the message data channels MESSAGE, convolutionally encodes each message data channel in the respective convolutional encoder **1411**, **1412**, **1413**, **1414**, modulates the data with random spreading code sequence in the respective spreader **1420**, **1421**, **1422**, **1423**, **1424**, and combines modulated data from all channels, including the pilot code received in the described embodiment from the code generator, in the combiner **1430** to generate I and Q components for RF transmission. The Transmitter Section **1301** of the present embodiment sup-

ports four (TR0, TR1, TR2, TR3) 64, 32, 16, 8 kb/s programmable channels. The message channel data is a time multiplexed signal received from the PCM highway **1201** through PCM interface **1220** and input to the MISR **1410**.

FIG. **15** is a block diagram of an exemplary MISR **1410**. For the exemplary embodiment of the present invention, a counter is set by the 8 KHz frame synchronization signal MPCMSYNC and is incremented by 2.048 MHz MPCMCLK from the timing circuit **1401**. The counter output is compared by comparator **1502** against TRCFG values corresponding to slot time location for TR0, TR1, TR2, TR3 message channel data; and the TRCFG values are received from the MIU Controller **1230** in MCTRL. The comparator sends count signal to the registers **1505**, **1506**, **1507** and **1508** which clocks message channel data into buffers **1510**, **1511**, **1512**, **1513** using the TXPCNCLK timing signal derived from the system clock. The message data is provided from the signal MSGDAT from the PCM highway signal MESSAGE when enable signals TR0EN, TR1EN, TR2EN and TR3EN from Timing Control Logic **1401** are active. In further embodiments, MESSAGE may also include signals that enable registers depending upon an encryption rate or data rate. If the counter output is equal to one of the channel location addresses, the specified transmit message data in registers **1510**, **1511**, **1512**, **1513** are input to the convolutional encoders **1411**, **1412**, **1413**, **1414** shown in FIG. **14**.

The convolutional encoder enables the use of Forward Error Correction (FEC) techniques, which are well known in the art. FEC techniques depend on introducing redundancy in generation of data in encoded form. Encoded data is transmitted and the redundancy in the data enables the receiver decoder device to detect and correct errors. One embodiment of the present invention employs convolutional encoding. Additional data bits are added to the data in the encoding process and are the coding overhead. The coding rate is expressed as the ratio of data bits transmitted to the total bits (code data+redundant data) transmitted and is called the rate "R" of the code.

Convolution codes are codes where each code bit is generated by the convolution of each new uncoded bit with a number of previously coded bits. The total number of bits used in the encoding process is referred to as the constraint length, "K", of the code. In convolutional coding, data is clocked into a shift register of K bits length so that an incoming bit is clocked into the register, and it and the existing K−1 bits are convolutionally encoded to create a new symbol. The convolution process consists of creating a symbol consisting of a module-2 sum of a certain pattern of available bits, always including the first bit and the last bit in at least one of the symbols.

FIG. **16** shows the block diagram of a K=7, R=½ convolution encoder suitable for use as the encoder **1411** shown in FIG. **14**. This circuit encodes the TR0 Channel as used in one embodiment of the present invention. Seven-Bit Register **1601** with stages Q1 through Q7 uses the signal TXPNCLK to clock in TR0 data when the TR0EN signal is asserted. The output value of stages Q1, Q2, Q3, Q4, Q6, and Q7 are each combined using EXCLUSIVE-OR Logic **1602**, **1603** to produce respective I and Q channel FEC data for the TR0 channel FECTR0DI and FECTR0DQ.

Two output symbol streams FECTR0DI and FECTR0DQ are generated. The FECTR0DI symbol stream is generated by EXCLUSIVE OR Logic **1602** of shift register outputs corresponding to bits **6**, **5**, **4**,**3**, and **0**, (Octal **171**) and is designed as In phase component "I" of the transmit message channel data. The symbol stream FECTR0DQ is likewise generated by EXCLUSIVE-OR logic **1603** of shift register outputs from bits **6**, **4** **3**, **1** and **0**, (Octal **133**) and is designated as Quadrature component "Q" of the transmit message channel data. Two symbols are transmitted to represent a single encoded bit creating the redundancy necessary to enable error correction to take place on the receiving end.

Referring to FIG. **14**, the shift enable clock signal for the transmit message channel data is generated by the Control Timing Logic **1401**. The convolutionally encoded transmit message channel output data for each channel is applied to the respective spreader **1420**, **1421**, **1422**, **1423**, **1424** which multiplies the transmit message channel data by its preassigned spreading code sequence from code generator **1402**. This spreading code sequence is generated by control **1303** as previously described, and is called a random pseudonoise signature sequence (PN-code).

The output signal of each spreader **1420**, **1421**, **1422**, **1423**, **1424** is a spread transmit data channel. The operation of the spreader is as follows: the spreading of channel output (I+jQ) multiplied by a random sequence (PNI+jPNQ) yields the In-phase component I of the result being composed of (I xor PNI) and (−Q xor PNQ). Quadrature component Q of the result is (Q xor PNI) and (I xor PNQ). Since there is no channel data input to the pilot channel logic (I=1, Q values are prohibited), the spread output signal for pilot channels yields the respective sequences PNI for I component and PNQ for Q component.

The combiner **1430** receives the I and Q spread transmit data channels and combines the channels into an I modem transmit data signal (TXIDAT) and a Q modem transmit data signal (TXQDAT). The I-spread transmit data and the Q spread transmit data are added separately.

For an SU, the CDMA modem Transmit Section **1301** includes the FIR filters to receive the I and Q channels from the combiner to provide pulse shaping, close-in spectral control and x/sin (x) correction for the transmitted signal. Separate but identical FIR filters receive the I and Q spread transmit data streams at the chipping rate, and the output signal of each of the filters is at twice the chipping rate. The exemplary FIR filters are 28 tap even symmetrical filters, which upsample (interpolate) by 2. The upsampling occurs before the filtering, so that 28 taps refers to 28 taps at twice the chipping rate, and the upsampling is accomplished by setting every other sample a zero. Exemplary coefficients are shown in Table 11.

TABLE 11

	Coefficient Values													
Coeff.No.:	0	1	2	3	4	5	6	7	8	9	10	11	12	13
Value:	3	−11	−34	−22	19	17	−32	−19	52	24	−94	−31	277	468

Coeff.No.	14	15	16	17	18	19	20	21	22	24	25	26	27
Value	277	−31	−94	24	52	−19	−32	17	19	−22	−34	−11	3

CDMA Modem Receiver Section

Referring to FIGS. **9** and **12**, the RF receiver **950** of the present embodiment accepts analog input I and Q CDMA channels, which are transmitted to the CDMA modems **1210**, **1211**, **1212**, **1215** through the MIUs **931**, **932**, **933** from the VDC **940**. These I and Q CMDA channel signals are sampled by the CDMA modem receive section **1302** (shown in FIG. **13**) and converted to I and Q digital receive message signal using an Analog to Digital (A/D) converter **1730**, shown in FIG. **17**. The sampling rate of the AID converter of the exemplary embodiment of the present invention is equivalent to the despreading code rate. The I and Q digital receive message signals are then despread with correlators using six different complex spreading code sequences corresponding to the despreading code sequences of the four channels (TR**0**, TR**1**, TR**2**, TR**3**), APC information and the pilot code.

Time synchronization of the receiver to the received signal is separated into two phases; there is an initial acquisition phase and then a tracking phase after the signal timing has been acquired. The initial acquisition is done by shifting the phase of the locally generated pilot code sequence relative to the received signal and comparing the output of the pilot despreader to a threshold. The method used is called sequential search. Two thresholds (match and dismiss) are calculated from the auxiliary despreader. Once the signal is acquired, the search process is stopped and the tracking process begins. The tracking process maintains the code generator **1304** (shown in FIGS. **13** and **17**) used by the receiver in synchronization with the incoming signal. The tracking loop used is the Delay-Locked Loop (DLL) and is implemented in the acquisition & track **1701** and the IPM **1702** blocks of FIG. **17**.

In FIG. **13**, the modem controller **1303** implements the Phase Lock Loop (PLL) as a software algorithm in SW PILL logic **1724** of FIG. **17** that calculates the phase and frequency shift in the received signal relative to the transmitted signal. The calculated phase shifts are used to derotate the phase shifts in rotate and combine blocks **1718**, **1719**, **1720**, **1721** of the multipath data signals for combining to produce output signals corresponding to receive channels TR**0**', TR**1**', TR**2**', TR**3**'. The data is then Viterbi decoded in Viterbi Decoders **1713**, **1714**, **1715**, **1716** to remove the convolutional encoding in each of the received message channels.

FIG. **17** indicates that the Code Generator **1304** provides the code sequences $Pn_i(t)$, i=1,2, . . . I used by the receive channel despreaders **1703**, **1704**, **1705**, **1706**, **1707**, **1708**, **1709**. The code sequences generated are timed in response to the SYNK signal of the system clock signal and are determined by the CCNTRL signal from the modem controller **1303** shown in FIG. **13**. Referring to FIG. **17**, the CDMA modem receiver section **1302** includes Adaptive Matched Filter (AMF) **1710**, Channel despreaders **1703**, **1704**, **1705**, **1706**, **1707**, **1708**, **1709**, Pilot AVC **1711**, Auxiliary AVC **1712**, Viterbi decoders **1713**, **1714**, **1715**, **1716**, Modem output interface (MOI) **1717**, Rotate and Combine logic **1718**, **1719**, **1720**, **1721**, AMF Weight Generator **1722**, and Quantile Estimation logic **1723**.

In another embodiment of the invention, the CDMA modem receiver also includes a Bit error Integrator to measure the BER of the channel and idle code insertion logic between the Viterbi decoders **1713**, **1714**, **1715**, **1716** and the MOI **1717** to insert idle codes in the event of loss of the message data.

The Adaptive Matched Filter (AMP) **1710** resolves multipath interference introduced by the air channel. The exemplary AMF **1710** uses an 11 stage complex FIR filter as shown in FIG. **18**. The received I and Q digital message signals are received at the register **1820** from the A/D **1730** of FIG. **17** and are multiplied in multipliers **1801**, **1802**, **1803**, **1810**, **1811** by I and Q channel weights W**1** to W**11** received from AMF weight generator **1722** of FIG. **17**. In the exemplary embodiment, the AID **1730** provides the I and Q digital receive message signal data as 2's complement values, 6 bits for I and 6 bits for Q which are clocked through an 11 stage shift register **1820** responsive to the receive spreading-code clock signal RXPNCLK. The signal RXPNCLK is generated by the timing section **1401** of code generation logic **1304**. Each stage of the shift register is tapped and complex multiplied in the multipliers **1801**, **1802**, **1803**, **1810**, **1811** by individual (6-bit I and 6-bit Q) weight values to provide 11 tap-weighted products which are summed in adder **1830**, and limited to 7-bit I and 7-bit Q values.

The CDMA modem receive section **1302** (shown in FIG. **13**) provides independent channel despreaders **1703**, **1704**, **1705**, **1706**, **1707**, **1708**, **1709** (shown in FIG. **17**) for despreading the message channels. The described embodiment despreads 7 message channels, each despreader accepting a 1-bit I b 1-bit Q despreading code signal to perform a complex correlation of this code against a 8-bit I by 8-bit Q data input. The 7 despreaders correspond to the 7 channels: Traffic Channel **0** (TR**0**'), TR**1**', T**2**'T**3**', AUX (a spare channel), Automatic Power Control (APC) and pilot (PLT).

The Pilot AVC **1711** shown in FIG. **19** receives the I and Q Pilot Spreading code sequence values PCI and PCQ into shift register **1920** responsive to the timing signal RXPNCLK, and includes 11 individual despreaders **1901** through **1911** each correlating the I and Q digital receive message signal data with a one chip delayed version of the same pilot code sequence. Signals OE**1**, OE**2**, . . . OE**11** are used by the modem control **1303** to enable the despreading operation. The output signals of the despreaders are combined in combiner **1920** forming correlation signal DSPRDAT of the Pilot AVC **1711**, which is received by the ACQ & Track logic **1701** (shown in FIG. **17**), and ultimately by modem controller **1303** (shown in FIG. **13**). The ACQ & Track logic **1701** uses the correlation signal value to determine if the local receiver is synchronized with its remote transmitter.

The Auxiliary AVC **1712** also receives the I and Q digital receive message signal data and, in the described embodiment, includes four separate despreaders **2001**, **2002**, **2003**, **2004** as shown in FIG. **20**. Each despreader receives and correlates the I and Q digital receive message data with delayed versions of the same despreading code sequence PARI and PARQ which are provided by code generator **1304** input to and contained in shift register **2020**. The output signals of the despreaders **2001**, **2002**, **2003**, **2004** are combined in combiner **2030** which provides noise correlation signal ARDSPRDAT. The auxiliary AVC spreading code sequence does not correspond to any transmit spreading code sequence of the system. Signals OE**1**, OE**2**, . . . OE**4** are used by the modem control **1303** to enable the despreading operation. The Auxiliary AVC **1712** provides a noise correlation signal ARDSPRDAT from which quantile estimates are calculated by the Quantile estimator **1733**, and provides a noise level measurement to the ACQ & Track logic **1701** (shown in FIG. **17**) and modem controller **1303** (shown in FIG. **13**).

Each despread channel output signal corresponding to the received message channels TR**0**', TR**1**', TR**2**', and TR**3**' is

input to a corresponding Viterbi decoder **1713**, **1714**, **1715**, **1716** shown in FIG. **17** which performs forward error correction on convolutionally encoded data. The Viterbi decoders of the exemplary embodiment have a constraint length of K=7 and a rate of R=½. The decoded despread message channel signals are transferred from the CDMA modem to the PCM Highway **1201** through the MOI **1717** The operation of the MOI is essentially the same as the operation of the MISR of the transmit section **1301** (shown in FIG. **13**) except in reverse.

The CDMA modem receiver section **1302** implements several different algorithms during different phases of the acquisition, tracking and despreading of the receive CDMA message signal.

When the received signal is momentarily lost (or severely degraded) the idle code insertion algorithm inserts idle codes in place of the lost or degraded receive message data to prevent the user from hearing loud noise bursts on a voice call. The idle codes are sent to the MOI **1717** (shown in FIG. **17**) in place of the decoded message channel output signal from the Viterbi decoders **1713**, **1714**, **1715**, **1716**. The idle code used for each traffic channel is programmed by the Modem Controller **1303** by writing the appropriate pattern IDLE to the MOI, which in the present embodiment is a 8 bit word for a 64 kb/s stream, 4 bit word for a 32 kb/s stream.

Modem Algorithms for Acquisition and Tracking of Received Pilot Signal

The acquisition and tracking algorithms are used by the receiver to determine the approximate code phase of a received signal, synchronize the local modem receiver despreaders to the incoming pilot signal, and track the phase of the locally generated pilot code sequence with the received pilot code sequence. Referring to FIGS. **13** and **17**, the algorithms are performed by the Modem controller **1303**, which provides clock adjust signals to code generator **1304**. These adjust signals cause the code generator for the despraders to adjust locally generated code sequences in response to measured output values of the Pilot Rake **1711** and Quantile values from quantile estimators **1723**B. Quantile values are noise statistics measured from the In-phase and Quadrature channels from the output values of the AUX Vector Correlator **1712** (shown in FIG. **17**). Synchronization of the receiver to the received signal is separated into two phases; an initial acquisition phase and a tracking phase The initial acquisition phase is accomplished by clocking the locally generated pilot spreading code sequence at a higher or lower rate than the received signal's spreading code rate, sliding the locally generated pilot spreading code sequence and performing sequential probability ratio test (SPRT) on the output of the Pilot Vector correlator **1711**. The tracking phase maintains the locally generated spreading code pilot sequence in synchronization with the incoming pilot signal. Details of the quantile estimators **1723**B may be found in U.S. patent application Ser. No. 08/218,198 entitled "ADAPTIVE POWER CONTROL FOR A SPREAD SPECTRUM COMMUNICATIONS SYSTEM" which is incorporated by reference herein for its teachings on adaptive power control systems.

The SU cold acquisition algorithm is used by the SU CDMA modem when it is first powered up, and therefore has no knowledge of the correct pilot spreading code phase, or when an SU attempts to reacquire synchronization with the incoming pilot signal but has taken an excessive amount of time. The cold acquisition algorithm is divided into two sub-phases. The first subphase consists of a search over the length 233415 code used by the FBCH. Once this sub-code phase is acquired, the pilot's 233415×128 length code is known to within an ambiguity of 128 possible phases. The second subphase is a search of these remaining 128 possible phases. In order not to lose synch with the FBCH, in the second phase of the search, it is desirable to switch back and forth between tracking of the FBCH code and attempting acquisition of the pilot code.

The RCS acquisition of short access pilot (SAXPT) algorithm is used by an RCS CDMA modem to acquire the SAXPT pilot signal of an SU. Additional details of this technique are described in U.S. Patent Application entitled "A METHOD OF CONTROLLING INITIAL POWER RAMP-UP IN CDMA SYSTEMS BY USING SHORT CODES" filed on even date herewith and herein incorporated by reference. The algorithm is a fast search algorithm because the SAXPT is a short code sequence of length N, where N=chips/symbol, and ranges from 45 to 195, depending on the system's bandwidth. The search cycles through all possible phases until acquisition is complete.

The RCS acquisition of the long access pilot (LAXPT) algorithm begins immediately after acquisition of SAXPT. The SU's code phase is known within a multiple of a symbol duration, so in the exemplary embodiment of the invention there may be 7 to 66 phases to search within the round trip delay from the RCS. This bound is a result of the SU pilot signal being synchronized to the RCS Global pilot signal.

The re-acquisition algorithm begins when loss of code, lock (LOL) occurs. A Z-search algorithm is used to speed the process on the assumption that the code phase has not drifted far from where it was the last time the system was locked. The RCS uses a maximum width of the Z-search windows bounded by the maximum round trip propagation delay.

The Pre-Track period immediately follows the acquisition or re-acquisition algorithms and immediately precedes the tracking algorithm. Pre-track is a fixed duration period during which the receive data provided by the modem is not considered valid. The Pre-Track period allows other modem algorithms, such as those used by the ISW PLL **1724**, ACQ & Tracking, AMF Weight GEN **1722**, to prepare and adapt to the current channel. The Pre-Track period is two parts. The first part is the delay while the code tracking loop pulls in. The second part is the delay while the AMP tap weight calculations are performed by the AMP Weight Gen **1722** to produce settled weighting coefficients. Also in the second part of the Pre-Track period, the carrier tracking loop is allowed to pull in by the SW PLL **1724**, and the scalar quantile estimates are performed in the Quantile estimator **1723**A.

The Tracking Process is entered after the Pre-Track period ends. This process is actually a repetitive cycle and is the only process phase during which receive data provided by the modem may be considered valid. The following operations are performed during this phase: AMP Tap Weight Update, Carrier Tracking, Code Tracking, Vector Quantile Update, Scalar Quantile Update, Code Lock Check, Derotation and Symbol Summing, and Power Control (forward and reverse)

If LOL is detected, the modem receiver terminates the Track algorithm and automatically enters the reaquisition algorithm. In the SU, a LOL causes the transmitter to be shut down. In the RCS, LOL causes forward power control to be disabled with the transmit power held constant at the level immediately prior to loss of lock. It also causes the return power control information being transmitted to assume a 010101 . . . pattern, causing the SU to hold its transmit power

constant. This can be performed using the signal lock check function which generates the reset signal to the acquisition and tracking circuit **1701**.

Two sets of quantile statistics are maintained, one by Quantile estimator **1723**B and the other by the scalar Quantile Estimator **1723**A. Both are used by the modem controller **1303**. The first set is the "vector" quantile information, so named because it is calculated from the vector of four complex values generated by the AUX AVC receiver **1712**. The second set is the scalar quantile information, which is calculated from the single complex value AUX signal that is output from the AUX Despreader **1707**. The two sets of information represent different sets of noise statistics used to maintain a predetermined Probability of False Alarm (P_{fa}). The vector quantile data is used by the acquisition and reaquisition algorithms implemented by the modem controller **1303** to determine the presence of a received signal in noise, and the scalar quantile information is used by the code lock check algorithm.

For both the vector and scalar cases, quantile information consists of calculated values of lambda**0** through lambda**2**, which are boundary values used to estimate the probability distribution function (p.d.f) of the despread receive signal and determine whether the modem is locked to the PN code. The Aux_Power value used in the following C-subroutine is the magnitude squared of the AUX signal output of the scalar correlator array for the scalar quantiles, and the sum of the magnitudes squared for the vector case. In both cases the quantiles are then calculated using the following C-subroutine:

```
for (n = 0; n < 3; n ++) {
    lambda [n] + = (lambda [n] < Aux_Power) ? CG[n] : GM[n];
    }
```

where CG[n] are positive constants and GM[n] are negative constants (different values are used for scalar and vector quantiles).

During the acquisition phase, the search of the incoming pilot signal with the locally generated pilot code sequence employs a series of sequential tests to determine if the locally generated pilot code has the correct code phase relative to the received signal. The search algorithms use the Sequential Probability Ratio Test (SPRT) to determine whether the received and locally generated code sequences are in phase. The speed of acquisition is increased by parallelism resulting from having a multi-fingered receiver. For example, in the described embodiment of the invention the main Pilot Rake **1711** has a total of 11 fingers representing a total phase period of 11 chip periods. For acquisition 8 separate sequential probability ratio tests (SPRTs) are implemented, with each SPRT observing a 4 chip window. Each window is offset from the previous window by one chip, and in a search sequence any given code phase is covered by 4 windows. If all 8 of the SPRT tests are rejected, then the set of windows is moved by 8 chips. If any of the SPRT's is accepted, then the code phase of the locally generated pilot code sequence is adjusted to attempt to center the accepted SPRT's phase within the Pilot AVC. It is likely that more than one SPRT reaches the acceptance threshold at the same time. A table lookup is used cover all 256 possible combinations of accept/reject and the modem controller uses the information to estimate the correct center code phase within the Pilot Rake **1711**. Each SPRT is implemented as follows (all operations occur at 64 k symbol rate): Denote the fingers' output level values as I_Finger[n] and Q_Finger[n], where n=0 . . . 10 (inclusive, 0 is earliest (most advanced) finger), then the power of each window is:

$$\text{Power Window } [i] = \sum_n (I_Finger^2[n] + Q_Finger^2[n])$$

To implement the SPRT's the modem controller then performs for each of the windows the following calculations which are expressed as a pseudo-code subroutine:

```
/* find bin for Power */
tmp = SIGMA[0];
for(k = 0; k < 3; k ++) {
    if (Power > lambda [k]) tmp = SIGMA[k + 1];
}
test_statistic + = tmp; /* update statistic */
if(test_statistic > ACCEPTANCE_THRESHOLD)you've got ACQ;
else if (test_statistic < DISMISSAL_THRESHOLD) {
    forget this code phase;
} else keep trying - get more statistics;
```

where lambda[k] are as defined in the above section on quantile estimation, and SIGMA[k], ACCEPTANCE_THRESHOLD and DISMISSAL_THRESHOLD are predetermined constants. Note that SIGMA[k] is negative for values for low values of k, and positive for right values of k, such that the acceptance and dismissal thresholds can be constants rather than a function of how many symbols worth of data have been accumulated in the statistic.

The modem controller determines which bin delimited by the values of lambda[m] the Power level falls into which allows the modem controller to develop an approximate statistic.

For the present algorithm, the control voltage is formed as $\epsilon = y^T B y$, where y is a vector formed from the complex valued output values of the Pilot Vector correlator **1711**, and B is a matrix consisting of the constant values pre-determined to maximize the operating characteristics while minimizing the noise as described previously with reference to the Quadratic Detector.

To understand the operation of the Quadratic Detector, it is useful to consider the following. A spread spectrum (CDMA) signal, s(t) is passed through a multipath channel with an impulse response $h_c(t)$. The baseband spread signal is described by equation (30).

$$s(t) = \sum_i C_i p(t - iT_c) \tag{30}$$

where C_i is a complex spreading code symbol, p(t) is a predefined chip pulse and T_c is the chip time spacing, where $T_c = 1/R_c$ and R_c is the chip rate.

The received baseband signal is represented by equation (31)

$$r(t) = \sum_i C_i q(t - iT_c - \tau) + n(t) \tag{31}$$

where $q(t) = p(t) * h_c(t)$, τ is an unknown delay and n(t) is additive noise. The received signal is processed by a filter, $h_R(t)$, so the waveform, x(t), to be processed is given by equation (32).

$$x(t) = \sum_i C_i f(t - iT_c - \tau) + z(t) \quad (32)$$

where $f(t)=q(t)*h_R(t)$ and $z(t)=n(t)*h_R(t)$.

In the exemplary receiver, samples of the received signal are taken at the chip rate, that is to say, $1/T_c$. These samples, $x(mT_c+\tau')$, are processed by an array of correlators that compute, during the rth correlation period, the quantities given by equation (33)

$$v_k^{(r)} = \sum_{m=rL}^{rL+L-1} x(mT_c + \tau')C_{m+k}^* \quad (33)$$

These quantities are composed of a noise component $w_k^{(r)}$ and a deterministic component $y_k^{(r)}$ given by equation (34).

$$y_k^{(r)}=E[v_{-k}^{(r)}]=Lf(kT_c+\tau'-\tau) \quad (34)$$

In the sequel, the time index r may be suppressed for ease of writing, although it is to be noted that the function f(t) changes slowly with time.

The samples are processed to adjust the sampling phase, τ', in an optimum fashion for further processing by the receiver, such as matched filtering. This adjustment is described below. To simplify the representation of the process, it is helpful to describe it in terms of the function $f(t+\tau)$, where the time-shift, τ, is to be adjusted. It is noted that the function $f(t+\tau)$ is measured in the presence of noise. Thus, it may be problematical to adjust the phase τ' based on measurements of the signal $f(t+\tau)$. To account for the noise, the function v(t): $v(t)=f(t)+m(t)$ is introduced, where the term m(t) represents a noise process. The system processor may be derived based on considerations of the function v(t).

The process is non-coherent and therefore is based on the envelope power function $|v(t+\tau)|^2$. The functional $e(\tau')$ given in equation (35) is helpful for describing the process.

$$e(\tau') = \int_{-\infty}^{0} |v(t+\tau'-\tau)|^2 dt - \int_{0}^{\infty} |v(t+\tau'-\tau)|^2 dt \quad (35)$$

The shift parameter is adjusted for $e(\tau')=0$, which occurs when the energy on the interval $(-\infty,\tau'-\tau]$ equals that on the interval $[\tau'-\tau,\infty)$. The error characteristic is monotonic and therefore has a single zero crossing point. This is the desirable quality of the functional. A disadvantage of the functional is that it is ill-defined because the integrals are unbounded when noise is present. Nevertheless, the functional $e(\tau')$ may be cast in the form given by equation (36).

$$e(\tau') = \int_{-\infty}^{\infty} w(t)|v(t+\tau'-\tau)|^2 dt \quad (36)$$

where the characteristic function w(t) is equal to sgn(t), the signum function.

To optimize the characteristic function w(t), it is helpful to define a figure of merit, F, as set forth in equation (37).

$$F = \frac{[e(\tau_0' + T_A) - e(\tau_0' - T_A)]^2}{\mathrm{VAR}\{e(\tau_0')\}} \quad (37)$$

The numerator of F is the numerical slope of the mean error characteristic on the interval $[-T_A,T_A]$ surrounding the tracked value, τ_O'. The statistical mean is taken with respect to the noise as well as the random channel, $h_c(t)$. It is desirable to specify a statistical characteristic of the channel in order to perform this statistical average. For example, the channel may be modeled as a Wide Sense Stationary Uncorrelated Scattering (WSSUS) channel with impulse response $h_c(t)$ and a white noise process U(t) that has an intensity function g(t) as shown in equation (38).

$$h_c(t)=\sqrt{g(t)}U(t) \quad (38)$$

The variance of $e(\tau)$ is computed as the mean square value of the fluctuation

$$e'(\tau)=e(\tau)-\langle e(\tau)\rangle \quad (39)$$

where $\langle e(\tau)\rangle$ is the average of $e(\tau)$ with respect to the noise.

Optimization of the figure of merit F with respect to the function w(t) may be carried out using well-known Variational methods of optimization.

Once the optimal w(t) is determined, the resulting processor may be approximated accurately by a quadratic sample processor which is derived as follows.

By the sampling theorem, the signal v(t), bandlimited to a bandwidth W may be expressed in terms of its samples as shown in equation (40).

$$v(t) = \sum v(k/W)\mathrm{sinc}[(Wt-k)\pi] \quad (40)$$

substituting this expansion into equation (z+6) results in an infinite quadratic form in the samples $v(k/W+\tau'-\tau)$. Making the assumption that the signal bandwidth equals the chip rate allows the use of a sampling scheme that is clocked by the chip clock signal to be used to obtain the samples. These samples, V_k are represented by equation (41).

$$v_k=v(kT_c+\tau'-\tau) \quad (41)$$

This assumption leads to a simplification of the implementation. It is valid if the aliasing error is small.

In practice, the quadratic form that is derived is truncated. An example normalized B matrix is given below in Table 12. For this example, an exponential delay spread profile $g(t)=\exp(-t/\tau)$ is assumed with τ equal to one chip. An aperture parameter T_A equal to one and one-half chips has also been assumed. The underlying chip pulse has a raised cosine spectrum with a 20% excess bandwidth.

TABLE 12

Example B matrix

0	0	0	0	0	0	0	0	0	0	0
0	0	−0.1	0	0	0	0	0	0	0	0
0	−0.1	0.22	0.19	−0.19	0	0	0	0	0	0
0	0	0.19	1	0.45	−0.2	0	0	0	0	0
0	0	−0.19	0.45	0.99	0.23	0	0	0	0	0
0	0	0	−0.2	0.23	0	−0.18	0.17	0	0	0
0	0	0	0	0	−0.18	−0.87	−0.42	0.18	0	0
0	0	0	0	0	0.17	−0.42	−0.92	−0.16	0	0
0	0	0	0	0	0	0.18	−0.16	−0.31	0	0
0	0	0	0	0	0	0	0	0	−0.13	0
0	0	0	0	0	0	0	0	0	0	0

Code tracking is implemented via a loop phase detector that is implemented as follows. The vector y is defined as a column vector which represents the 11 complex output level values of the Pilot AVC **1711**, and B denotes an 11×11 symmetric real valued coefficient matrix with predetermined values to optimize performance with the non-coherent Pilot AVC output values y. The output signal ϵ of the phase detector is given by equation (42):

$$\epsilon = y^T B y \quad (42)$$

The following calculations are then performed to implement a proportional plus integral loop filter and the VCO:

$$x[n] = x[n-1] + \beta\epsilon$$

$$z[n] = z[n-1] + x[n] + \alpha\epsilon$$

for β and α which are constants chosen from modeling the system to optimize system performance for the particular transmission channel and application, and where x[n] is the loop filter's integrator output value and z[n] is the VCO output value. The code phase adjustments are made by the modem controller the following C-subroutine:

```
if (z > zmx) {
    delay phase 1/16 chip;
    z -= zmax;
} else if (z < -zmax) {
    advance phase 1/16 chip;
    z += zmax;
}
```

A different delay phase could be used in the above pseudo-code consistant with the present invention.

The AMF Tap-Weight Update Algorithm of the AMF Weight Gen **1722** occurs periodically to de-rotate and scale the phase of each finger value of the Pilot Rake **1711** by performing, a complex multiplication of the Pilot AVC finger value with the complex conjugate of the current output value of the carrier tracking loop and applying the product to a low pass filter and form the complex conjugate of the filter values to produce AMF tap-weight values, which are periodically written into the AMF filters of the CDMA modem.

The lock check algorithm, shown in FIG. **17**, is implemented by the modem controller **1303** performing SPRT operations on the output signal of the scalar correlator array. The SPRT technique is the same as that for the acquisition algorithms, except that the acceptance and rejection thresholds are changed to increase the probability of detection of lock.

Carrier tracking is accomplished via a second order loop that operates on the pilot output values of the scalar correlated array. The phase detector output is the hard limited version of the quadrature component of the product of the (complex valued) pilot output signal of the scalar correlated array and the VCO output signal. The loop filter is a proportional plus integral design. The VCO is a pure summation, accumulated phase error ϕ, which is converted to the complex phasor $\cos\phi + j\sin\phi$ using a look-up table in memory.

The previous description of acquisition and tracking algorithm focuses on a non-coherent method because the acquisition and tracking algorithm described requires non-coherent acquisition following by non-coherent tracking because during acquisition a coherent reference is not available until the AMF, Pilot AVC, Aux AVC, and DPLL are in an equilibrium state. However, it is known in the art that coherent tracking and combining is always optimal because in non-coherent tracking and combining the output phase information of each Pilot AVC finger is lost. Consequently, another embodiment of the invention employs a two step acquisition and tracking system, in which the previously described non-coherent acquisition and tracking algorithm is implemented first, and then the algorithm switches to a coherent tracking method. The coherent combining and tracking method is similar to that described previously, except that the error signal tracked is of the form:

$$\epsilon = y^T A y \quad (43)$$

where y is defined as a column vector which represents the 11 complex output level values of the Pilot AVC **1711**, and A denotes an 11×11 symmetric real valued coefficient matrix with pre-determined values to optimize performance with the coherent Pilot AVC outputs y. An exemplary A matrix is shown below.

$$A = \begin{bmatrix} 1 & 0 & 0 & 0 & 0 & 0 & 0 & 0 & 0 & 0 & 0 \\ 0 & 1 & 0 & 0 & 0 & 0 & 0 & 0 & 0 & 0 & 0 \\ 0 & 0 & 1 & 0 & 0 & 0 & 0 & 0 & 0 & 0 & 0 \\ 0 & 0 & 0 & 1 & 0 & 0 & 0 & 0 & 0 & 0 & 0 \\ 0 & 0 & 0 & 0 & 1 & 0 & 0 & 0 & 0 & 0 & 0 \\ 0 & 0 & 0 & 0 & 0 & 0 & 0 & 0 & 0 & 0 & 0 \\ 0 & 0 & 0 & 0 & 0 & 0 & -1 & 0 & 0 & 0 & 0 \\ 0 & 0 & 0 & 0 & 0 & 0 & 0 & -1 & 0 & 0 & 0 \\ 0 & 0 & 0 & 0 & 0 & 0 & 0 & 0 & -1 & 0 & 0 \\ 0 & 0 & 0 & 0 & 0 & 0 & 0 & 0 & 0 & -1 & 0 \\ 0 & 0 & 0 & 0 & 0 & 0 & 0 & 0 & 0 & 0 & -1 \end{bmatrix} \quad (44)$$

Referring to FIG. **9**, the Video Distribution Controller Board (VDC) **940** of the RCS is connected to each MIU **931**. **932**, **933** and the RF Transmitters/Receivers **950**. The VDC **940** is shown in FIG. **21**. The Data Combiner Circuitry (DCC) **2150** includes a Data Demultiplexer **2101**, Data Summer **2102**, FIR Filters **2103**, **2104**, and a Driver **2111**. The DCC **2150** 1) receives the weighted CDMA modem I and Q data signal MDAT from each of the MIUs, **931**, **932**, **933**, 2) sums the I and Q data with the digital bearer channel data from each MIU **931**, **932**, **933**, 3) and sums the result with the broadcast data message signal BCAST and the Global Pilot spreading code GPILOT provided by the master MIU modem **1210**, 4) band shapes the summed signals for transmission, and 5) produces analog data signal for transmission to the RF Transmitter/Receiver.

FIR Filters **2103**, **2104** are used to modify the MIU CDMA Transmit I and Q Modem Data before transmission. The WAC transfers FIR Filter Coefficient data through the Serial Port link **912** through the VDC Controller **2120** and to the FIR filters **2103**, **2104**. Each FIR Filter **2103**, **2104** is Configured separately. The FIR Filters **2103**, **2104** employ Up-Sampling to operate at twice the chip rate so zero data values are sent after every MIU CDMA Transmit Modem DATI and DATQ value to produce FTXI and FTXQ

The VDC **940** distributes the AGC signal AGCDATA from the AGC **1750** of the MIUs **931**, **932**, **933** to the RF Transmitter/Receiver **950** through the Distribution interface (DI) **2110**. The VDC DI **2110** receives data RXI and RXQ from the RF Transmitter/Receiver and distributes the signal as VDATAI and VDATAQ to MIUs **931**, **932**, **933**.

Referring to FIG. **21**, the VDC **940** also includes a VDC controller **2120** which monitors status and fault information signals MIUSTAT from MIUs and connects to the serial link **912** and HSBS **970** to communicate with WAC **920** shown in FIG. **9**. The VDC controller **2120** includes a microprocessor, such as an Intel 8032 Microcontroller, an oscillator (not shown) providing timing signals, and memory (not shown). The VDC controller memory includes a Flash Prom (not shown) to contain the controller program code for the 8032 Microprocessor, and an SRAM (not shown) to

contain the temporary data written to and read from memory by the microprocessor.

Referring to FIG. **9**, the present invention includes a RF Transmitter/Receiver **950** and power amplifier section **960**. Referring to FIG. **22**, the RF Transmitter/Receiver **950** is divided into three sections: the transmitter module **2201**, the receiver module **2202**, and the Frequency Synthesizer **2203**. Frequency Synthesizer **2203** produces a transmit carrier frequency TFREQ and a receive carrier frequency RFREQ in response to a Frequency control signal FREQCTRL received from the WAC **920** on the serial link **912**. In the transmitter module **2201**, the input analog I and Q data signals TXI and TXQ from the VDC are applied to the Quadrature modulator **2220**, which also receives a transmit carrier frequency signal TFREQ from the Frequency Synthesizer **2203** to produce a quadrature modulated transmit carrier signal TX. The analog transmit carrier modulated signal, an upconverted RF signal, TX is then applied to the Transmit Power Amplifier **2252** of the Power Amplifier **960**. The amplified transmit carrier signal is then passed through the High Power Passive Components (HPPC) **2253** to the Antenna **2250**, which transmits the upconverted RF signal to the communication channel as a CDMA RF signal. In one embodiment of the invention, the Transmit Power Amplifier **2252** comprises eight amplifiers of approximately 60 watts peak-to-peak each.

The HPPC **2253** comprises a lightning protector, an output filter, a 10 dB directional coupler, an isolator, and a high power termination attached to the isolator.

A receive CDMA RF signal is received at the antenna **2250** from the RF channel and passed through the HPPC **2253** to the Receive Power Amplifier **2251**. The receive power amplifier **2251** includes, for example, a 30 watt power transistor driven by a 5 watt transistor. The RF receive module **2202** has quadrature modulated receive carrier signal RX from the receive power amplifier. The receive module **2202** includes a Quadrature demodulator **2210** which takes the receive carrier modulated signal RX and the receive carrier frequency signal RFREQ from the Frequency Synthesizer **2203**, synchronously demodulates the carrier, and provides analog I and Q channels. These channels are filtered to produce the signals RXI and RXQ, which are transferred to the VDC **940**.

The Subscriber Unit

FIG. **23** shows the Subscriber Unit (SU) of one embodiment of the present invention. As shown, the SU includes an RF section **2301** including a RF modulator **2302**, RF demodulator **2303**, and splitter/isolator **2304** which receive Global and Assigned logical channels including traffic and control messages and Global Pilot signals in the Forward link CDMA RF channel signal, and transmit Assigned Channels and Reverse Pilot signals in the Reverse Link CDMA RF channel. The Forward and Reverse links are received and transmitted respectively through antenna **2305**. The RF section employs, in one exemplary embodiment, a conventional dual conversion superheterodyne receiver having a synchronous demodulator responsive to the signal ROSC. Selectivity of such a receiver is provided by a 70 MHz transversal SAW filter (not shown). The RF modulator includes a synchronous modulator (not shown) responsive to the carrier signal TOSC to produce a quadrature modulated carrier signal. This signal is stepped up in frequency by an offset mixing circuit (not shown).

The SU further includes a Subscriber Line Interface **2310**, including the functionality of a control (CC) generator, a Data Interface **2320**, an ADPCM encoder **2321**, an ADPCM decoder **2322**, an SU controller **2330**, an SU clock signal generator **2331**, memory **2332**, and a CDMA modem **2340**, which is essentially the same as the CDMA modem **1210** described above wih reference to FIG. **13**. It is noted that data interface **2320**, ADPCM Encoder **2321** and ADPCM Decoder **2322** are typically provided as a standard ADPCM Encoder/Decoder chip.

The Forward Link CDMA RF Channel signal is applied to the RF demodulator **2303** to produce the Forward link CDMA signal. The Forward Link CDMA signal is provided to the CDMA modem **2340**, which acquires synchronization with the Global pilot signal, produces global pilot synchronization signal to the Clock **2331**, to generate the system timing signals, and despreads the plurality of logical channels. The CDMA modem **2340** also acquires the traffic messages RMESS and control messages RCTRL and provides the traffic message signals RMESS to the Data Interface **2320** and receive control message signals RCTRL to the SU Controller **2330**.

The receive control message signals RCTRL include a subscriber identification signal, a coding signal, and bearer modification signals. The RCTRL may also include control and other telecommunication signaling information. The receive control message signal RCTRL is applied to the SU controller **2330**, which verifies that the call is for the SU from the Subscriber identification value derived from RCTRL. The SU controller **2330** determines the type of user information contained in the traffic message signal from the coding signal and bearer rate modification signal. If the coding signal indicates the traffic message is ADPCM coded, the traffic message RVMESS is sent to the ADPCM decoder **2322** by sending a select message to the Data Interface **2320**. The SU controller **2330** outputs an ADPCM coding signal and bearer rate signal derived from the coding signal to the ADPCM decoder **2322**. The traffic message signal RVMESS is the input signal to the ADPCM decoder **2322**, where the traffic message signal is converted to a digital information signal RINF in response to the values of the input ADPCM coding signal.

If the SU controller **2330** determines the type of user information contained in the traffic message signal from the coding signal is not ADPCM coded, then RDMESS passes through the ADPCM encoder transparently. The traffic message RDMESS is transferred from the Data Interface **2320** directly to the Interface Controller (IC) **2312** of the subscriber line interface **2310**.

The digital information signal RINF or RDMESS is applied to the subscriber line interface **2310**, including a interface controller (IC) **2312** and Line Interface (LI) **2313**. For the exemplary embodiment the IC is an Extended PCM Interface Controller (EPIC) and the LI is a Subscriber Line Interface Circuit (SLIC) for POTS which corresponds to RINF type signals, and a ISDN Interface for ISDN which corresponds to RDMESS type signals. The EPIC and SLIC circuits are well known in the art. The subscriber line interface **2310** converts the digital information signal RINF or RDMESS to the user defined format. The user defined format is provided to the IC **2312** from the SU Controller **2330**. The LI **2310** includes circuits for performing such functions as A-law or μ-law conversion, generating dial tone and, and generating or interpreting signaling bits. The line interface also produces the user information signal to the SU User **2350** as defined by the subscriber line interface, for example POTS voice, voiceband data or ISDN data service.

For a Reverse Link CDMA RF Channel, a user information signal is applied to the LI **2313** of the subscriber line

interface **2310**, which outputs a service type signal and an information type signal to the SU controller. The IC **2312** of the subscriber line interface **2310** produces a digital information signal TINF which is the input signal to the ADPCM encoder **2321** if the user information signal is to be ADPCM encoded, such as for POTS service. For data or other non-ADPCM encoded user information, the IC **2312** passes the data message TDMESS directly to the Data Interface **2320**. The Call control module (CC), including in the subscriber line interface **2310**, derives call control information from the User information signal, and passes the call control information CCINF to the SU controller **2330**. The ADPCM encoder **2321** also receives coding signal and bearer modification signals from the SU controller **2330** and converts the input digital information signal into the output message traffic signal TVMESS in response to the coding and bearer modification signals The SU controller **2330** also outputs the reverse control signal which includes the coding signal call control information, and bearer channel modification signal, to the CDMA modem. The output message signal TVMESS is applied to the Data Interface **2320**. The Data Interface **2320** sends the user information to the CDMA modem **2340** as transmit message signal TMESS. The CDMA modem **2340** spreads the output message and reverse control channels TCTRL received from the SU controller **2330**, and produces the reverse link CDMA Signal. The Reverse Link CDMA signal is provided to the RF transmit section **2301** and modulated by the RF modulator **2302** to produce the output Reverse Link CDMA RF channel signal transmitted from antenna **2305**.

Call Connection and Establishment Procedure

The process of bearer channel establishment consists of two procedures: the call connection process for a call connection incoming from a remote call processing unit such as an RDU (Incoming Call Connection), and the call connection process for a call outgoing from the SU (Outgoing Call Connection). Before any bearer channel can be established between an RCS and a SU, the SU must register its presence in the network with the remote call processor such as the RDU. When the off-hook signal is detected by the SU, the SU not only begins to establish a bearer channel; but also initiates the procedure for an RCS to obtain a terrestrial link between the RCS and the remote processor. As incorporated herein by reference, the process of establishing the RCS and RDU connection is detailed in the DECT V5.1 standard.

For the Incoming Call Connection procedure shown in FIG. **24**, first **2401**, the WAC **920** (shown in FIG. **9**) receives, via one of the MUXs **905**, **906** and **907**, an incoming call request from a remote call processing unit. This request identifies the target SU and that a call connection to the SU is desired. The WAC periodically outputs the SBCH channel with paging indicators for each SU and periodically outputs the FBCH traffic lights for each access channel. In response to the incoming call request, the WAC, at step **2420**, first checks to see if the identified SU is already active with another call. If so, the WAC returns a busy signal for the SU to the remote processing unit through the MUX, otherwise the paging indicator for the channel is set

Next, at step **2402**, the WAC checks the status of the RCS modems and, at step **2421**, determines whether there is an available modem for the call. If a modem is available, the traffic lights on the FBCH indicate that one or more AXCH channels are available. If no channel is available after a certain period of time, then the WAC returns a busy signal for the SU to the remote processing unit through the MUX. If an RCS modem is available and the SU is not active (in Sleep mode), the WAC sets the paging indicator for the identified SU on the SBCH to indicate an incoming call request. Meanwhile, the access channel modems continuously search for the Short Access Pilot signal (SAXPT) of the SU.

At step **2403**, an SU in Sleep mode periodically enters awake mode. In awake mode, the SU modem synchronizes to the Downlink Pilot signal, waits for the SU modem AMF filters and phase locked loop to settle, and reads the paging indicator in the slot assigned to it on the SBCH to determine if there is a call for the SU **2422**. If no paging indicator is set, the SU halts the SU modem and returns to sleep mode. If a paging indicator is set for an incoming call connection, the SU modem checks the service type and traffic lights on FBCH for an available AXCH.

Next, at step **2404**, the SU modem selects an available AXCH and starts a fast transmit power ramp-up on the corresponding SAXPT. For a period the SU modem continues fast power ramp-up on SAXPT and the access modems continue to search for the SAXPT.

At step **2405**, the RCS modem acquires the SAXPT of the SU and begins to search for the SU LAXPT. When the SAXPT is acquired, the modem informs the WAC controller, and the WAC controller sets the traffic lights corresponding to the modem to "red" to indicate the modem is now busy. The traffic lights are periodically output while continuing to attempt acquisition of the LAXPT.

The SU modem monitors, at step **2406**, the FBCH AXCH traffic light. When the AXCH traffic light is set to red, the SU assumes the RCS modem has acquired the SAXPT and begins transmitting LAXPT. The SU modem continues to ramp-up power of the LAXPT at a slower rate until Sync-Ind messages are received on the corresponding CTCH. If the SU is mistaken because the traffic light was actually set in response to another SU acquiring the AXCH, the SU modem times out because no Sync-Ind messages are received. The SU randomly waits a period of time, picks a new AXCH channel, and steps **2404** and **2405** are repeated until the SU modem receives Sync-Ind messages. Details of the power ramp up method used in the exemplary embodiment of this invention may be found in the U.S. patent application entitled METHOD OF CONTROLLING INITIAL POWER RAMP-UP IN CDMA SYSTEMS BY USING SHORT CODES filed on even date herewith, which is hereby incorporated by reference.

Next, at step **2407**, the RCS modem acquires the LAXPT of the SU and begins sending Sync-Ind messages on the corresponding CTCH. The modem waits 10 msec for the Pilot and AUX Vector correlator filters and Phase locked loop to settle, but continues to send Synch-Ind messages on the CTCH. The modem then begins looking for a request message for access to a bearer channel (MAC_ACC_REQ), from the SU modem.

The SU modem, at step **2408**, receives the Sync-Ind message and freezes the LAXPT transmit power level. The SU modem then begins sending repeated request messages for access to a bearer traffic channel (MAC_ACC_REQ) at fixed power levels, and listens for a request confirmation message (MAC_BEARER_CFM) from the RCS modem.

Next, at step **2409**, the RCS modem receives a MAC_ACC_REQ message; the modem then starts measuring the AXCH power level, and starts the APC channel. The RCS modem then sends the MAC_BEARER_CPM message to the SU and begins listening for the acknowledgment MAC_BEARER_CFM_ACK of the MAC_BEARER_CFM message.

At step **2410**, the SU modem receives the MAC_BEARER_CFM message and begins obeying the APC power control messages. The SU stops sending the MAC_ACC_REQ message and sends the RCS modem the MAC_BEARER_CFM_ACK message. The SU begins sending the null data on the AXCH. The SU waits 10 msec for the uplink transmit power level to settle.

The RCS modem, at step **2411**, receives the MAC_BEARER_CFM_ACK message and stops sending the MAC_BEARER_CFM messages. APC power measurements continue.

Next, at step **2412**, both the SU and the RCS modems have synchronized the sub-epochs, obey APC messages, measure receive power levels, and compute and send APC messages. The SU waits 10 msec for downlink power level to settle.

Finally, at step **2413**, Bearer channel is established and initialized between the SU and RCS modems. The WAC receives the bearer establishment signal from the RCS modem, re-allocates the AXCH channel and sets the corresponding traffic light to green.

For the Outgoing Call Connection shown in FIG. **25**, the SU is placed in active mode by the off-hook signal at the user interface at step **2501**.

Next, at step **2502**, the RCS indicates available AXCH channels by setting the respective traffic lights.

At step **2503**, the SU synchronizes to the Downlink Pilot, waits for the SU modem Vector correlator filters and phase lock loop to settle, and the SU checks service type and traffic lights for an available AXCH.

Steps **2504** through **2513** are identical to the procedure steps **2404** through **2413** for the Incoming Call Connection procedure of FIG. **24**, and so are not explained in detail.

In the previous procedures for Incoming Call Connection and Outgoing Call Connection, the power Ramping-Up process consists of the following events. The SU starts from very low transmit power and increases its power level while transmitting the short code SAXPT; once the RCS modem detects the short code it turns off the traffic light. Upon detecting the changed traffic light, the SU continues ramping-up at a slower rate this time sending the LAXPT. Once the RCS modem acquires the LAXPT and sends a message on CTCH to indicate this, the SU keeps its transmit (TX) power constant and sends the MAC-Access-Request message. This message is answered with a MAC_BEARER_CFM message on the CTCH. Once the SU receives the MAC_BEAER_CFM message it switches to the traffic channel (TRCH) which is the dial tone for POTS.

When the SU captures a specific user channel AXCH, the RCS assigns a code seed for the SU through the CTCH. The code seed is used by the spreading code generator in the SU modem to produce the assigned code for the reverse pilot of the subscriber, and the spreading codes for associated channels for traffic, call control, and signaling. The SU reverse pilot spreading code sequence is synchronized in phase to the RCS system Global Pilot spreading code sequence, and the traffic, call control, and signaling spreading codes are synchronized in phase to the SU reverse pilot spreading code sequence.

If the Subscriber unit is successful in capturing a specific user channel, the RCS establishes a terrestrial link with the remote processing unit to correspond to the specific user channel. For the DECT V5.1 standard, once the complete link from the RDU to the LE is established using the V5.1 ESTABLISHMENT message, a corresponding V5.1 ESTABLISHMENT ACK message is returned from the LE to the RDU, and the Subscriber Unit is sent a CONNECT message indicating that the transmission link is complete.

Support of Special Service Types

The system of the present invention includes a bearer channel modification feature which allows the transmission rate of the user information to be switched from a lower rate to a maximum of 64 kb/s. The Bearer Channel Modification (BCM) method is used to change a 32 kb/s ADPCM channel to a 64 kb/s PCM channel to support high speed data and fax communications through the spread-spectrum communication system of the present invention. Additional details of this technique are described in U.S. Patent Application entitled "CDMA COMMUNICATION SYSTEM WHICH SELECTIVELY SUPPRESSES DATA TRANSMISSIONING DURING ESTABLISHMENT OF A COMMUNICATION CHANNEL" filed on even date herewith and incorporated herein by reference.

First, a bearer channel on the RF interface is established between the RCS and SU, and a corresponding link exists between the RCS terrestrial interface and the remote processing unit such as an RDU. The digital transmission rate of the link between the RCS and remote processing unit normally corresponds to a data encoded rate, which may be, for example, ADPCM at 32 kb/s. The WAC controller of the RCS monitors the encoded digital data information of the link received by the Line Interface of the MUX. If the WAC controller detects the presence of the 2100 Hz tone in the digital data, the WAC instructs the SU through the assigned logical control channel and causes a second, 64 kb/s duplex link to be established between the RCS modem and the SU. In addition, the WAC controller instructs the remote processing unit to establish a second 64 kb/s duplex link between the remote processing unit and the RCS. Consequently, for a brief period, the remote processing unit and the SU exchange the same data over both the 32 kb/s and the 64 kb/s links through the RCS. Once the second link is established, the remote processing unit causes the WAC controller to switch transmission only to the 64 kb/s link, and the WAC controller instructs the RCS modem and the SU to terminate and tear down the 32 kb/s link. Concurrently, the 32 kb/s terrestrial link is also terminated and tom down.

Another embodiment of the BCM method incorporates a negotiation between the external remote processing unit, such as the RDU, and the RCS to allow for redundant channels on the terrestrial interface, while only using one bearer channel on the RF interface. The method described is a synchronous switchover from the 32 kb/s link to the 64 kb/s link over the air link which takes advantage of the fact that the spreading code sequence timing is synchronized between the RCS modem and SU. When the WAC controller detects the presence of the 2100 Hz tone in the digital data, the WAC controller instructs the remote processing unit to establish a second 64 kb/s duplex link between the remote processing unit and the RCS. The remote processing unit then sends 32 kb/s encoded data and 64 kb/s data concurrently to the RCS. Once the remote processing unit has established the 64 kb/s link, the RCS is informed and the 32 kb/s link is terminated and tom down. The RCS also informs the SU that the 32 kb/s link is being torn down and to switch processing to receive unencoded 64 kb/s data on the channel. The SU and RCS exchange control messages over the bearer control channel of the assigned channel group to identify and determine the particular subepoch of the bearer channel spreading code sequence within which the RCS will begin

transmitting 64 kbit/sec data to the SU. Once the subepoch is identified, the switch occurs synchronously at the identified subepoch boundary. This synchronous switchover method is more economical of bandwidth since the system does not need to maintain capacity for a 64 kb/s link in order to support a switchover.

The previously described embodiments of the BCM feature, the RCS will tear down the 32 kb/s link first, but one skilled in the art would know that the RCS could tear down the 32 kb/s link after the bearer channel has switched to the 64 kb/s link.

As another special service type, the system of the present invention includes a method for conserving capacity over the RF interface for ISDN types of traffic. This conservation occurs while a known idle bit pattern is transmitted in the ISDN D-channel when no data information is being transmitted. The CDMA system of the present invention includes a method to prevent transmission of redundant information carried on the D-channel of ISDN networks for signals transmitted through a wireless communication link. The advantage of such method is that it reduces the amount of information transmitted and consequently the transmit power and channel capacity used by that information. The method is described as it is used in the RCS. In the first step, the controller, such as the WAC of the RCS or the SU controller of the SU, monitors the output D-channel from the subscriber line interface for a pre-determined channel idle pattern. A delay is included between the output of the line interface and the CDMA modem. Once the idle pattern is detected, the controller inhibits the transmission of the spread message channel through a message included in the control signal to the CDMA modem. The controller continues to monitor the output D-channel of the line interface until the presence of data information is detected. When data information is detected, the spread message channel is activated. Because the message channel is synchronized to the associated pilot which is not inhibited, the corresponding CDMA modem of the other end of the communication link does not have to reacquire synchronization to the message channel.

Drop Out Recovery

The RCS and SU each monitor the CDMA bearer channel signal to evaluate the quality of the CDMA bearer channel connection. Link quality is evaluated using the sequential probability ratio test (SPRT) employing adaptive quantile estimation. The SPRT process uses measurements of the received signal power; and if the SPRT process detects that the local spreading code generator has lost synchronization with the received signal spreading code or if it detects the absence or low level of a received signal, the SPRT declares loss of lock (LOL).

When the LOL condition is declared, the receiver modem of each RCS and SU begins a Z-search of the input signal with the local spreading code generator. Z-search is well known in the art of CDMA spreading code acquisition and detection and is described in *Digital Communications and Spread Spectrum Systems,* by Robert E. Ziemer and Roger L. Peterson, at pages 492–94 which is incorporated herein by reference. The Z-search algorithm of the present invention tests groups of eight spreading code phases ahead and behind the last known phase in larger and larger spreading code phase increments.

During the LOL condition detected by the RCS, the RCS continues to transmit to the SU on the Assigned Channels, and continues to transmit power control signals to the SU to maintain SU transmit power level. The method of transmitting power control signals is described below. Successful reacquisition desirably takes place within a specified period of time. If reacquisition is successful, the call connection continues, otherwise the RCS tears down the call connection by deactivating and deallocating the RCS modem assigned by the WAC, and transmits a call termination signal to a remote call processor, such as the RDU, as described previously.

When the LOL condition is detected by the SU, the SU stops transmission to the RCS on the Assigned Channels which forces the RCS into a LOL condition, and starts the reacquisition algorithm. If reacquisition is successful, the call connection continues, and if not successful, the RCS tears down the call connection by deactivating and deallocating the SU modem as described previously.

Power Control

General

The power control feature of the present invention is used to minimize the amount of transmit power used by an RCS and the SUs of the system, and the power control subfeature that updates transmit power during bearer channel connection is defined as automatic power control (APC). APC data is transferred from the RCS to an SU on the forward APC channel and from an SU to the RCS on the reverse APC channel. When there is no active data link between the two, the maintenance power control (MPC) subfeature updates the SU transmit power.

Transmit power levels of forward and reverse assigned channels and reverse global channels are controlled by the APC algorithm to maintain sufficient signal power to interference noise power ratio (SIR) on those channels, and to stabilize and minimize system output power. The present invention uses a closed loop power control mechanism in which a receiver decides that the transmitter should incrementally raise or lower its transmit power. This decision is conveyed back to the respective transmitter via the power control signal on the APC channel. The receiver makes the decision to increase or decrease the transmitter's power based on two error signals. One error signal is an indication of the difference between the measured and desired despread signal powers, and the other error signal is an indication of the average received total power.

As used in the described embodiment of the invention, the term near-end power control is used to refer to adjusting the transmitter's output power in accordance with the APC signal received on the APC channel from the other end. This means the reverse power control for the SU and forward power control for the RCS; and the term far-end APC is used to refer to forward power control for the SU and reverse power control for the RCS (adjusting the opposite end's transmit power).

In order to conserve power, the SU modem terminates transmission and powers-down while waiting for a call, defined as the sleep phase. Sleep phase is terminated by an awaken signal from the SU controller. The SU modem acquisition circuit automatically enters the reacquisition phase, and begins the process of acquiring the downlink pilot, as described previously.

Closed Loop Power Control Algorithms

The near-end power control consists of two steps: first, the initial transmit power is set; and second, the transmit power is continually adjusted according to information received from the far-end using APC.

For the SU, initial transmit power is set to a minimum value and then ramped up, for example, at a rate of 1 dB/ms until either a ramp-up timer expires (not shown) or the RCS changes the corresponding traffic light value on the FBCH to "red" indicating that the RCS has locked to the SU's short pilot SAXPT. Expiration of the timer causes the SAXPT transmission to be shut down, unless the traffic light value is set to red first, in which case the SU continues to ramp-up transmit power but at a much lower rate than before the "red" signal was detected.

For the RCS, initial transmit power is set at a fixed value, corresponding to the minimum value necessary for reliable operation as determined experimentally for the service type and the current number of system users. Global channels, such as Global Pilot or, FBCH, are always transmitted at the fixed initial power, whereas traffic channels are switched to APC.

The APC bits are transmitted as one bit up or down signals on the APC channel. In the described embodiment, the 64 kb/s APC data stream is not encoded or interleaved.

Far-end power control consists of the near-end transmitting power control information for the far-end to use in adjusting its transmit power.

The APC algorithm causes the RCS or the SU to transmit +1 if the following inequality holds, otherwise −1.

$$\alpha_1 e_1 - \alpha_2 e_2 > 0 \tag{45}$$

Here, the error signal e_1 is calculated as

$$e_1 = P_d - (1+\mathrm{SNR}_{REQ})P_N \tag{46}$$

where P_d is the despread signal plus noise power, P_N is the despread noise power, and SNR_{REQ} is the desired despread signal to noise ratio for the particular service type; and

$$e_2 = P_r - P_o \tag{47}$$

where Pr is a measure of the received power and Po is the automatic gain control (AGC) circuit set point. The weights α_1 and α_2 in equation (33) are chosen for each service type and APC update rate.

Maintenance Power Control

During the sleep phase of the SU, the interference noise power of the CDMA RF channel may change. The present invention includes a maintenance power control feature (MPC) which periodically adjusts the SU's initial transmit power with respect to the interference noise power of the CDMA channel. The MPC is the process whereby the transmit power level of an SU is maintained within close proximity of the minimum level for the RCS to detect the SU's signal. The MPC process compensates for low frequency changes in the required SU transmit power.

The maintenance control feature uses two global channels: one is called the status channel (STCH) on reverse link, and the other is called the check-up channel (CUCH) on forward link. The signals transmitted on these channels carry no data and they are generated the same way the short codes used in initial power ramp-up are generated. The STCH and CUCH codes are generated from a "reserved" branch of the global code generator.

The MPC process is as follows. At random intervals, the SU sends a symbol length spreading code periodically for 3 ms on the status channel (STCH). If the RCS detects the sequence, it replies by sending a symbol length code sequence within the next 3 ms on the check-up channel (CUCH). When the SU detects the response from the RCS, it reduces its transmit power by a particular step size. If the SU does not see any response from the RCS within that 3 ms period, it increases its transmit power by the step size. Using this method, the RCS response is transmitted at a power level that is enough to maintain a 0.99 detection probability at all SU's.

The rate of change of traffic load and the number of active users is related to the total interference noise power of the CDMA channel. The update rate and step size of the maintenance power update signal for the present invention is determined by using queuing theory methods well known in the art of communication theory, such as outlined in "*Fundamentals of Digital Switching*" (Plenum-New York) edited by McDonald and incorporated herein by reference. By modeling the call origination process as an exponential random variable with mean 6.0 mins, numerical computation shows the maintenance power level of a SU should be updated once every 10 seconds or less to be able to follow the changes in interference level using 0.5 dB step size. Modeling the call origination process as a Poisson random variable with exponential interarrival times, arrival rate of 2×10^{-4} per second per user, service rate of $\frac{1}{360}$ per second, and the total subscriber population is 600 in the RCS service area also yields by numerical computation that an update rate of once every 10 seconds is sufficient when 0.5 dB step size is used.

Maintenance power adjustment is performed periodically by the SU which changes from sleep phase to awake phase and performs the MPC process. Consequently, the process for the MPC feature is shown in FIG. **26** and is as follows: First, at step **2601**, signals are exchanged between the SU and the RCS maintaining a transmit power level that is close to the required level for detection: the SU periodically sends a symbol length spreading code in the STCH, and the RCS periodically sends a symbol length spreading code in the CUCH as response.

Next, at step **2602**, if the SU receives a response within 3 ms after the STCH message it sent, it decreases its transmit power by a particular step size at step **2603**; but if the SU does not receive a response within 3 ms after the STCH message, it increases its transmit power by the same step size at step **2604**.

The SU waits, at step **2605**, for a period of time before sending another STCH message, this time period is determined by a random process which averages 10 seconds.

Thus, the transmit power of the STCH messages from the SU is adjusted based on the RCS response periodically, and the transmit power of the CUCH messages from the RCS is fixed.

Mapping of Power Control Signal to Logical Channels For APC

Power control signals are mapped to specified Logical Channels for to controlling transmit power levels of forward and reverse assigned channels. Reverse global channels are also controlled by the APC algorithm to maintain sufficient signal power to interference noise power ratio (SIR) on those reverse channels, and to stabilize and minimize system output power. The present invention uses a closed loop power control method in which a receiver periodically decides to incrementally raise or lower the output power of the transmitter at the other end. The method also conveys that decision back to the respective transmitter.

TABLE 13

APC Signal Channel Assignments

Link Channels and Signals	Call/ Connection Status	Power Control Method: Initial Value	Power Control Method: Continuous
Reverse link AXCH AXPT	Being Established	as determined by power ramping	APC bits in forward APC channel
Reverse link APC, OW, TRCH, pilot signal	In-Progress	level established during call set-up	APC bits in forward APC channel
Forward link APC, OW, TRCH	In-Progress	fixed value	APC bits in reverse APC channel

Forward and reverse links are independently controlled. For a call/connection in process, forward link (TRCHs APC, and OW) power is controlled by the APC bits transmitted on the reverse APC channel. During the call/connection establishment process, reverse link (AXCH) power is also controlled by the APC bits transmitted on the forward APC channel. Table 13 summarizes the specific power control methods for the controlled channels.

The required SIRs of the assigned channels TRCH, APC and OW and reverse assigned pilot signal for any particular SU are fixed in proportion to each other and these channels are subject to nearly identical fading, therfore, they are power controlled together.

Adaptive Forward Power Control

The AFPC process attempts to maintain the minimum required SIR on the forward channels during a call/connection. The AFPC recursive process, shown in FIG. **27**, consists of the steps of having an SU form the two error signals e_1 and e_2 in step **2701** where

$$e_1=P_d-(1+\mathrm{SNR}_{REQ})\,P_N \quad (36)$$

$$e_2=P_r-P_o \quad (37)$$

and P_d is the despread signal plus noise power, P_N is the despread noise power, SNR_{REQ} is the required signal to noise ratio for the service type, P_r is a measure of the total received power, and P_o is the AGC set point. Next, the SU modem forms the combined error signal $\alpha_1 e_1+\alpha_2 e_2$ in step **2702**. Here, the weights α_1 and α_2 are chosen for each service type and APC update rate. In step **2703**, the SU hard limits the combined error signal and forms a single APC bit. The SU transmits the APC bit to the RCS in step **2704** and RCS modem receives the bit in step **2705**. The RCS increases or decreases its transmit power to the SU in step **2706** and the algorithm repeats starting from step **2701**.

Adaptive Reverse Power Control

The ARPC process maintains the minimum desired SIR on the reverse channels to minimize the total system reverse output power, during both call/connection establishment and while the call/connection is in progress. The recursive ARPC process, shown in FIG. **28**, begins at step **2801** where the RCS modem forms the two error signals e_1 and e_2 in step **2801** where

$$e_1=P_d-(1+\mathrm{SNR}_{REQ})P_N \quad (38)$$

$$e_2=P_{rt}-P_o \quad (39)$$

and P_d is the despread signal plus noise power, P_N is the despread noise power, SNR_{REQ} is the desired signal to noise ratio for the service type, P_{rt} is a measure of the average total power received by the RCS, and P_o is the AGC set point. The RCS modem forms the combined error signal $\alpha_1 e_1+\alpha_2 e_2$ in step **2802** and hard limits this error signal to determine a single APC bit in step **2803**. The RCS transmits the APC bit to the SU in step **2804**, and the bit is received by the SU in step **2805**. Finally, the SU adjusts its transmit power according to the received APC bit in step **2806**, and the algorithm repeats starting from step **2801**.

TABLE 14

Symbols/Thresholds Used for APC Computation

Service or Call Type	Call/ Connection Status	Symbol (and Threshold) Used for APC Decision
Don't care	Being Established	AXCH
ISDN D SU	In-Progress	one 1/64-kb/s symbol from TRCH (ISDN-D)
ISDN 1B + D SU	In-Progress	TRCH (ISDN-B)
ISDN 2B + D SU	In-Progress	TRCH (one ISDN-B)
POTS SU (64 KBPS PCM)	In-Progress	one 1/64-KBPS symbol from TRCH, use 64 KBPS PCM threshold
POTS SU (32 KBPS ADPCM)	In-Progress	one 1/64-KBPS symbol from TRCH, use 32 KBPS ADPCM threshold
Silent Maintenance Call (any SU)	In-Progress	OW (continuous during a maintenance call)

SIR and Multiple Channel Types

The required SIR for channels on a link is a function of channel format (e.g. TRCH, OW), service type (e.g. ISDN B. 32 KBPS ADPCM POTS), and the number of symbols over which data bits are distributed (e.g. two 64 kb/s symbols are integrated to form a single 32 kb/s ADPCM POTS symbol). Despreader output power corresponding to the required SIR for each channel and service type is predetermined. While a call/connection is in progress, several user CDMA logical channels are concurrently active; each of these channels transfers a symbol every symbol period. The SIR of the symbol from the nominally highest SIR channel is measured, compared to a threshold and used to determine the APC step up/down decision each symbol period. Table 14 indicates the symbol (and threshold) used for the APC computation by service and call type.

APC Parameters

APC information is always conveyed as a single bit of information, and the APC Data Rate is equivalent to the APC Update Rate. The APC update rate is 64 kb/s. This rate is high enough to accommodate expected Rayleigh and Doppler fades, and allow for a relatively high (~0.2) Bit Error Rate (BER) in the Uplink and Downlink APC channels, which minimizes capacity devoted to the APC.

The power step up/down indicated by an APC bit is nominally between 0.1 and 0.01 dB. The dynamic range for power control is 70 dB on the reverse link and 12 dB on the forward link for the exemplary embodiment of the present system.

An Alternative Embodiment of Multiplexing of APC information

The dedicated APC and OW logical channels described previously can also be multiplexed together in one logical

channel. The APC information is transmitted at 64 kb/s. continuously whereas the OW information occurs in data bursts. The alternative multiplexed logical channel includes the unencoded, non-interleaved 64 kb/s. APC information on, for example, the In-phase channel and the OW information on the Quadrature channel of the QPSK signal.

Closed Loop Power Control Implementation

The closed loop power control during a call connection responds to two different variations in overall system power. First, the system responds to local behavior such as changes in power level of an SU, and second, the system responds to changes in the power level of the entire group of active users in the system.

The Power Control system of the exemplary embodiment of the present invention is shown in FIG. **29**. As shown, the circuitry used to adjust the transmitted power is similar for the RCS (shown as the RCS power control module **2901**) and SU (shown as the SU power control module **2902**). Beginning with the RCS power control module **2901**, the reverse link RF channel signal is received at the RF antenna and demodulated to produce the reverse CDMA signal RMCH. The signal RMCH is applied to the variable gain amplifier (VGA**1**) **2910** which produces an input signal to the Automatic Gain Control (AGC) Circuit **2911**. The AGC **2911** produces a variable gain amplifier control signal into the VGA**1** **2910**. This signal maintains the level of the output signal of VGA**1** **2910** at a near constant value. The output signal of VGA**1** is despread by the despread-demultiplexer (demux) **2912**, which produces a despread user message signal MS and a forward APC bit. The forward APC bit is applied to the integrator **2913** to produce the Forward APC control signal. The Forward APC control signal controls the Forward Link VGA**2** **2914** and maintains the Forward Link RF channel signal at a minimum desired level for communication.

The signal power of the despread user message signal MS of the RCS power module **2901** is measured by the power measurement Circuit **2915** to produce a signal power indication. The output of the VGA**1** is also despread by the AUX despreader which despreads the signal by using an uncorrelated spreading code, and hence obtains a despread noise signal. The power measurement of this signal is multiplied by 1 plus the desired signal to noise ratio (SNR_R) to form the threshold signal S**1**. The difference between the despread signal power and the threshold value S**1** is produced by the subtracter **2916**. This difference is the error signal ES**1**, which is an error signal relating to the particular SU transmit power level. Similarly, the control signal for the VGA**1** **2910** is applied to the rate scaling circuit **2917** to reduce the rate of the control signal for VGA**1** **2910**. The output signal of scaling circuit **2917** is a scaled system power level signal SP**1**. The Threshold Compute logic **2918** calculates the System Signal Threshold value SST from the RCS user channel power data signal RCSUSR. The complement of the Scaled system power level signal, SP**1**, and the System Signal Power Threshold value SST are applied to the adder **2919** which produces second error signal ES**2**. This error signal is related to the system transmit power level of all active SUs. The input Error signals ES**1** and ES**2** are combined in the combiner **2920** produce a combined error signal input to the delta modulator (DM**1**) **2921**, and the output signal of the DM**1** is the reverse APC bit stream signal, having bits of value +1 or −1, which for the present invention is transmitted as a 64 kb/sec signal.

The Reverse APC bit is applied to the spreading circuit **2922**, and the output signal of the spreading circuit **2922** is the spread-spectrum forward APC message signal. Forward OW and Traffic signals are also provided to spreading circuits **2923**, **2924**, producing forward traffic message signals 1, 2, . . . N. The power level of the forward APC signal, the forward OW, and traffic message signals are adjusted by the respective amplifiers **2925**, **2926** and **2927** to produce the power level adjusted forward APC, OW, and TRCH channels signals. These signals are combined by the adder **2928** and applied to the VAG**2** **2914**, which produces forward link RF channel signal.

The forward link RF channel signal including the spread forward APC signal is received by the RF antenna of the SU, and demodulated to produce the forward CDMA signal FMCH. This signal is provided to the variable gain amplifier (VGA**3**) **2940**. The output signal of VGA**3** is applied to the Automatic Gain Control Circuit (AGC) **2941** which produces a variable gain amplifier control signal to VGA**3** **2940**. This signal maintains the level of the output signal of VGA**3** at a near constant level. The output signal of VAG**3** **2940** is despread by the despread demux **2942**, which produces a despread user message signal SUMS and a reverse APC bit. The reverse APC bit is applied to the integrator **2943** which produces the Reverse APC control signal This reverse APC control signal is provided to the Reverse APC VGA**4** **2944** to maintain the Reverse link RF channel signal at a minimum power level.

The despread user message signal SUMS is also applied to the power measurement circuit **2945** producing a power measurement signal, which is added to the complement of threshold value S**2** in the adder **2946** to produce error signal ES**3**. The signal ES**3** is an error signal relating to the RCS transmit power level for the particular SU. To obtain threshold S**2**, the despread noise power indication from the AUX despreader is multiplied by 1 plus the desired signal to noise ratio SNR_R. The AUX despreader despreads the input data using an uncorrelated spreading code, hence its output is an indication of the despread noise power.

Similarly, the control signal for the VGA**3** is applied to the rate scaling circuit to reduce the rate of the control signal for VGA**3** in order to produce a scaled received power level RP**1** (see FIG. **29**). The threshold compute circuit computes the received signal threshold RST from the SU measured power signal SUUSR. The complement of the scaled received power level RP**1** and the received signal threshold RST are applied to the adder which produces error signal ES**4**. This error is related to the RCS transmit power to all other SUs. The input error signals ES**3** and ES**4** are combined in the combiner and input to the delta modulator DM**2** **2947**. The output signal of DM**2** **2947** is the forward APC bit stream signal, with bits having value of value +1 or −1. In the exemplary embodiment of the present invention, this signal is transmitted as a 64 kb/sec signal.

The Forward APC bit stream signal is applied to the spreading circuit **2948**, to produce the output reverse spread-spectrum APC signal. Reverse OW and Traffic signals are also input to spreading circuits **2949**, **2950**, producing reverse OW and traffic message signals 1, 2, . . . N, and the reverse pilot is generated by the reverse pilot generator **2951**. The power level of the reverse APC message signal, reverse OW message signal, reverse pilot, and the reverse traffic message signals are adjusted by amplifiers **2952**, **2953**, **2954**, **2955** to produce the signals which are combined by the adder **2956** and input to the reverse APC VGA**4** **2944**. It is this VGA**4** **2944** which produces the reverse link RF channel signal.

During the call connection and bearer channel establishment process, the closed loop power control of the present

invention is modified, and is shown in FIG. **30**. As shown, the circuits used to adjust the transmitted power are different for the RCS, shown as the Initial RCS power control module **3001**; and for the SU, shown as the Initial SU power control module **3002**. Beginning with the Initial RCS power control module **3001**, the reverse link RF channel signal is received at the RF antenna and demodulated producing the reverse CDMA signal IRMCH which is received by the first variable gain amplifier (VGA**1**) **3003**. The output signal of VGA**1** is detected by the Automatic Gain Control Circuit (AGC**1**) **3004** which provides a variable gain amplifier control signal to VGA**1** **3003** to maintain the level of the output signal of VAG**1** at a near constant value. The output signal of VGA**1** is despread by the despread demultiplexer **3005**, which produces a despread user message signal IMS. The Forward APC control signal, ISET, is set to a fixed value, and is applied to the Forward Link Variable Gain Amplifier (VGA**2**) **3006** to set the Forward Link RF channel signal at a predetermined level.

The signal power of the despread user message signal IMS of the Initial RCS power module **3001** is measured by the power measure circuit **3007**, and the output power measurement is subtracted from a threshold value S**3** in the subtracter **3008** to produce error signal ES**5**, which is an error signal relating to the transmit power level of a particular SU. The threshold S**3** is calculated by multiplying the despread power measurement obtained from the AUX despreader by 1 plus the desired signal to noise ratio SNR_R. The AUX despreader despreads the signal using an uncorrelated spreading code, hence its output signal is an indication of despread noise power. Similarly, the VGA**1** control signal is applied to the rate scaling circuit **3009** to reduce the rate of the VGA**1** control signal in order to produce a scaled system power level signal SP**2**. The threshold computation logic **3010** determines an Initial System Signal Threshold value (ISST) computed from the user channel power data signal (IRCSUSR). The complement of the Scaled system power level signal SP**2** and the ISST are provided to the adder **3011** which produces a second error signal ES**6**, which is an error signal relating to the system transmit power level of all active SUs. The value of ISST is the desired transmit power for a system having the particular configuration. The input Error signals ES**5** and ES**6** are combined in the combiner **3012** produce a combined error signal input to the delta modulator (DM**3**) **3013**. DM**3** produces the initial reverse APC bit stream signal, having bits of value +1 or −1, which in the exemplary embodiment is transmitted as a 64 kb/s signal.

The Reverse APC bit stream signal is applied to the spreading circuit **3014**, to produce the initial spread-spectrum forward APC signal. The CTCH information is spread by the spreader **3016** to form the spread CTCH message signal. The spread APC and CTCH signals are scaled by the amplifiers **3015** and **3017**, and combined by the combiner **3018**. The combined signal is applied to VAG**2** **3006**, which produces the forward link RF channel signal.

The forward link RF channel signal including the spread forward APC signal is received by the RF antenna of the SU and demodulated to produce the initial forward CDMA signal (IFMCH) which is applied to the variable gain amplifier (VGA**3**) **3020**. The output signal of VGA**3** is detected by the Automatic Gain Control Circuit (AGC**2**) **3021** which produces a variable gain amplifier control signal for the VGA**3** **3020**. This signal maintains the output power level of the VGA**3** **3020** at a near constant value. The output signal of VAG**3** is despread by the despread demultiplexer **3022**, which produces an initial reverse APC bit that is dependent on the output level of VGA**3**. The reverse APC bit is processed by the integrator **3023** to produce the Reverse APC control signal. The Reverse APC control signal is provided to the Reverse APC VGA**4** **3024** to maintain Reverse link RF channel signal at a defined power level.

The global channel AXCH signal is spread by the spreading circuits **3025** to provide the spread AXCH channel signal. The reverse pilot generator **3026** provides a reverse pilot signal, and the signal power of AXCH and the reverse pilot signal are adjusted by the respective amplifiers **3027** and **3028**. The spread AXCH channel signal and the reverse pilot signal are summed by the adder **3029** to produce reverse link CDMA signal. The reverse link CDMA signal is received by the reverse APC VGA**4** **3024**, which produces the reverse link RF channel signal output to the RF transmitter.

System Capacity Management

The system capacity management algorithm of the present invention optimizes the maximum user capacity for an RCS area, called a cell. When the SU comes within a certain value of minimum transmit power, the SU sends an alarm message to the RCS. The RCS sets the traffic lights which control access to the system, to "red" which, as previously described, is a flag that inhibits access by the SU's. This condition remains in effect until the call to the alarming SU terminates, or until the transmit power of the alarming SU, measured at the SU, is a value less than the maximum transmit power. When multiple SUs send alarm messages, the condition remains in effect until either all calls from alarming SUs terminate, or until the transmit power of the alarming SU, measured at the SU, is less than the maximum transmit power. An alternative embodiment monitors the bit error rate measurements from the FEC decoder, and holds the RCS traffic lights at "red" until the bit error rate is less than a predetermined value.

The blocking strategy of the present invention includes a method which uses the power control information transmitted from the RCS to an SU, and the received power measurements at the RCS. The RCS measures its transmit power level, detects that a maximum value is reached, and determines when to block new users. An SU preparing to enter the system blocks itself if the SU reaches the maximum transmit power before successful completion of a bearer channel assignment.

Each additional user in the system has the effect of increasing the noise level for all other users, which decreases the signal to noise ratio (SNR) that each user experiences. The power control algorithm maintains a desired SNR for each user. Therefore, in the absence of any other limitations, addition of a new user into the system has only a transient effect and the desired SNR is regained.

The transmit power measurement at the RCS is done by measuring either the root mean square (rms) value of the baseband combined signal or by measuring the transmit power of the RF signal and feeding it back to digital control circuits. The transmit power measurement may also be made by the SUs to determine if the unit has reached its maximum transmit power. The SU transmit power level is determined by measuring the control signal of the RF amplifier, and scaling the value based on the service type, such as POTS, FAX, or ISDN.

The information that an SU has reached the maximum power is transmitted to the RCS by the SU in a message on the Assigned Channels. The RCS also determines the condition by measuring reverse APC changes because, if the

RCS sends APC messages to the SU to increase SU transmit power, and the SU transmit power measured at the RCS is not increased, the SU has reached the maximum transmit power.

The RCS does not use traffic lights to block new users who have finished ramping-up using the short codes. These users are blocked by denying them the dial tone and letting them time out. The RCS sends all 1's (go down commands) on the APC Channel to make the SU lower its transmit power. The RCS also sends either no CTCH message or a message with an invalid address which would force the FSU to abandon the access procedure and start over. The SU, however, does not start the acquisition process immediately because the traffic lights are red.

When the RCS reaches its transmit power limit, it enforces blocking in the same manner as when an SU reaches its transmit power limit. The RCS turns off all the traffic lights on the FBCH, stats sending all 1 APC bits (go down commands) to those users who have completed their short code ramp-up but have not yet been given a dial tone, and either sends no CTCH message to these users or sends messages with invalid addresses to force them to abandon the access process.

The self blocking process of the SU is as follows. When the SU starts transmitting the AXCH, the APC starts its power control operation using the AXCH and the SU transmit power increases. While the transmit power is increasing under the control of the APC, it is monitored by the SU controller. If the transmit power limit is reached, the SU abandons the access procedure and starts over.

System Synchronization

The RCS is synchronized either to the PSTN Network Clock signal through one of the Line interfaces, as shown in FIG. **10**, or to the RCS system clock oscillator, which free-runs to provide a master timing signal for the system. The Global Pilot Channel, and therefore all Logical channels within the CDMA channel, are synchronized to the system clock signal of the RCS. The Global Pilot (GLPT) is transmitted by the RCS and defines the timing at the RCS transmitter.

The SU receiver is synchronized to the GLPT, and so behaves as a slave to the Network Clock oscillator. However, the SU timing is retarded by the propagation delay. In the present embodiment of the invention, the SU modem extracts a 64 KHz and 8 KHz clock signal from the CDMA RF Receive channel, and a PLL oscillator circuit creates 2 MHz and 4 MHz clock signals

The SU transmitter and hence the LAXPT or ASPT are staved to the timing of the SU receiver.

The RCS receiver is synchronized to the LAXPT or the ASPT transmitted by the SU, however, its timing may be retarded by the propagation delay. Hence, the timing of the RCS receiver is that of the RCS transmitter retarded by twice the propagation delay.

Furthermore, the system can be synchronized via a reference received from a Global Positioning System receiver (GPS). In a system of this type, a GPS receiver in each RCS provides a reference clock signal to all submodules of the RCS. Because each RCS receives the same time reference from the GPS, all of the system clock signals in all of the RCSs are synchronized.

Although the invention has been described in terms of multiple exemplary embodiments, it is understood by those skilled in the art that the invention may be practiced with modifications to the embodiments that are within the scope of the invention as defined by the following claims.

APPENDIX A

0	75	150	225	300	375	450	525	600	675	750	825
1	76	151	226	301	376	451	526	601	676	751	826
2	77	152	227	302	377	452	527	602	677	752	827
3	78	153	228	303	378	453	528	603	678	753	828
4	79	154	229	304	379	454	529	604	679	754	829
5	80	155	230	305	380	455	530	605	680	755	830
6	81	156	231	306	381	456	531	606	681	756	831
7	82	157	232	307	382	457	532	607	682	757	832
8	83	158	233	308	383	458	533	608	683	758	833
9	84	159	234	309	384	459	534	609	684	759	834
10	85	160	235	310	385	460	535	610	685	760	835
11	86	161	236	311	386	461	536	611	686	761	836
12	87	162	237	312	387	462	537	612	687	762	837
13	88	163	238	313	388	463	538	613	688	763	838
14	89	164	239	314	389	464	539	614	689	764	839
15	90	165	240	315	390	465	540	615	690	765	840
16	91	166	241	316	391	466	541	616	691	766	841
17	92	167	242	317	392	467	542	617	692	767	842
18	93	168	243	318	393	468	543	618	693	768	843
19	94	169	244	319	394	469	544	619	694	769	844
20	95	170	245	320	395	470	545	620	695	770	845
21	96	171	246	321	396	471	546	621	696	771	846
22	97	172	247	322	397	472	547	622	697	772	847
23	98	173	248	323	398	473	548	623	698	773	848
24	99	174	249	324	399	474	549	624	699	774	849
25	100	175	250	325	400	475	550	625	700	775	850
26	101	176	251	326	401	476	551	626	701	776	851
27	102	177	252	327	402	477	552	627	702	777	852
28	103	178	253	328	403	478	553	628	703	778	853
29	104	179	254	329	404	479	554	629	704	779	854
30	105	180	255	330	405	480	555	630	705	780	855
31	106	181	256	331	406	481	556	631	706	781	856

-continued

APPENDIX A

32	107	182	257	332	407	482	557	632	707	782	857
33	108	183	258	333	408	483	558	633	708	783	858
34	109	184	259	334	409	484	559	634	709	784	859
35	110	185	260	335	410	485	560	635	710	785	860
36	111	186	261	336	411	486	561	636	711	786	861
37	112	187	262	337	412	487	562	637	712	787	862
38	113	188	263	338	413	488	563	638	713	788	863
39	114	189	264	339	414	489	564	639	714	789	864
40	115	190	265	340	415	490	565	640	715	790	865
41	116	191	266	341	416	491	566	641	716	791	866
42	117	192	267	342	417	492	567	642	717	792	867
43	118	193	268	343	418	493	568	643	718	793	868
44	119	194	269	344	419	494	569	644	719	794	869
45	120	195	270	345	420	495	570	645	720	795	870
46	121	196	271	346	421	496	571	646	721	796	871
47	122	197	272	347	422	497	572	647	722	797	872
48	123	198	273	348	423	498	573	648	723	798	873
49	124	199	274	349	424	499	574	649	724	799	874
50	125	200	275	350	425	500	575	650	725	800	875
51	126	201	276	351	426	501	576	651	726	801	876
52	127	202	277	352	427	502	577	652	727	802	877
53	128	203	278	353	428	503	578	653	728	803	878
54	129	204	279	354	429	504	579	654	729	804	879
55	130	205	280	355	430	505	580	655	730	805	880
56	131	206	281	356	431	506	581	656	731	806	881
57	132	207	282	357	432	507	582	657	732	807	882
58	133	208	283	358	433	508	583	658	733	808	883
59	134	209	284	359	434	509	584	659	734	809	884
60	135	210	285	360	435	510	585	660	735	810	885
61	136	211	286	-361	436	511	586	661	736	811	886
62	137	212	287	362	437	512	587	662	737	812	887
63	138	213	288	363	438	513	588	663	738	813	888
64	139	214	289	364	439	514	589	664	739	814	889
65	140	215	290	365	440	515	590	665	740	815	890
66	141	216	291	366	441	516	591	666	741	816	891
67	142	217	292	367	442	517	592	667	742	817	892
68	143	218	293	368	443	518	593	668	743	818	893
69	144	219	294	369	444	519	594	669	744	819	894
70	145	220	295	370	445	520	595	670	745	820	895
71	146	221	296	371	446	521	596	671	746	821	896
72	147	222	297	372	447	522	597	672	747	822	897
73	148	223	298	373	448	523	598	673	748	823	898
74	149	224	299	374	449	524	599	674	749	824	899
900	975	1050	22272302		2377	2452	2527	2602	2677	2752	2827
901	976	1051	22282303		2378	2453	2528	2603	2678	2753	2828
902	977	1052	22292304		2379	2454	2529	2604	2679	2754	2829
903	978	1053	22302305		2380	2455	2530	2605	2680	2755	2830
904	979	1054	22312306		2381	2456	2531	2606	2681	2756	2831
905	980	1055	22322307		2382	2457	2532	2607	2682	2757	2832
906	981	1056	22332308		2383	2458	2533	2608	2683	2758	2833
907	982	1057	22342309		2384	2459	2534	2609	2684	2759	2834
908	983	1058	22352310		2385	2460	2535	2610	2685	2760	2835
909	984	1059	22362311		2386	2461	2536	2611	2686	2761	2836
910	985	1060	22372312		2387	2462	2537	2612	2687	2762	2837
911	986	1061	22382313		2388	2463	2538	2613	2688	2763	2838
912	987	1062	22392314		2389	2464	2539	2614	2689	2764	2839
913	988	1063	22402315		2390	2465	2540	2615	2690	2765	2840
914	989	1064	22412316		2391	2466	2541	2616	2691	2766	2841
915	990	1065	22422317		2392	2467	2542	2617	2692	2767	2842
916	991	1066	22432318		2393	2468	2543	2618	2693	2768	2843
917	992	1067	22442319		2394	2469	2544	2619	2694	2769	2844
918	993	1068	22452320		2395	2470	2545	2620	2695	2770	2845
919	994	1069	22462321		2396	2471	2546	2621	2696	2771	2846
920	995	1070	22472322		2397	2472	2547	2622	2697	2772	2847
921	996	1071	22482323		2398	2473	2548	2623	2698	2773	2848
922	997	1072	22492324		2399	2474	2549	2624	2699	2774	2849
923	998	1073	22502325		2400	2475	2550	2625	2700	2775	2850
924	999	1074	22512326		2401	2476	2551	2626	2701	2776	2851
925	1000	1075	22522327		2402	2477	2552	2627	2702	2777	2852
926	1001	1076	22532328		2403	2478	2553	2628	2703	2778	2853
927	1002	1077	22542329		2404	2479	2554	2629	2704	2779	2854
928	1003	1078	22552330		2405	2480	2555	2630	2705	2780	2855
929	1004	1079	22562331		2406	2481	2556	2631	2706	2781	2856
930	1005	1080	22572332		2407	2482	2557	2632	2707	2782	2857
931	1006	1081	22582333		2408	2483	2558	2633	2708	2783	2858
932	1007	1082	22592334		2409	2484	2559	2634	2709	2784	2859
933	1008	1083	22602335		2410	2485	2560	2635	2710	2785	2860

-continued

APPENDIX A

934	1009	1084	2261	2336	2411	2486	2561	2636	2711	2786	2861
935	1010	1085	2262	2337	2412	2487	2562	2637	2712	2787	2862
936	1011	1086	2263	2338	2413	2488	2563	2638	2713	2788	2863
937	1012	1087	2264	2339	2414	2489	2564	2639	2714	2789	2864
938	1013	1088	2265	2340	2415	2490	2565	2640	2715	2790	2865
939	1014	1089	2266	2341	2416	2491	2566	2641	2716	2791	2866
940	1015	1090	2267	2342	2417	2492	2567	2642	2717	2792	2867
941	1016	1091	2268	2343	2418	2493	2568	2643	2718	2793	2868
942	1017	1092	2269	2344	2419	2494	2569	2644	2719	2794	2869
943	1018	1093	2270	2345	2420	2495	2570	2645	2720	2795	2870
944	1019	1094	2271	2346	2421	2496	2571	2646	2721	2796	2871
945	1020	1095	2272	2347	2422	2497	2572	2647	2722	2797	2872
946	1021	1096	2273	2348	2423	2498	2573	2648	2723	2798	2873
947	1022	1097	2274	2349	2424	2499	2574	2649	2724	2799	2874
948	1023	1098	2275	2350	2425	2500	2575	2650	2725	2800	2875
949	1024	1099	2276	2351	2426	2501	2576	2651	2726	2801	2876
950	1025	1100	2277	2352	2427	2502	2577	2652	2727	2802	2877
951	1026	1101	2278	2353	2428	2503	2578	2653	2728	2803	2878
952	1027	2204	2279	2354	2429	2504	2579	2654	2729	2804	2879
953	1028	2205	2280	2355	2430	2505	2580	2655	2730	2805	2880
954	1029	2206	2281	2356	2431	2506	2581	2656	2731	2806	2881
955	1030	2207	2282	2357	2432	2507	2582	2657	2732	2807	2882
956	1031	2208	2283	2358	2433	2508	2583	2658	2733	2808	2883
957	1032	2209	2284	2359	2434	2509	2584	2659	2734	2809	2884
958	1033	2210	2285	2360	2435	2510	2585	2660	2735	2810	2885
959	1034	2211	2236	2361	2436	2511	2586	2661	2736	2811	2886
960	1035	2212	2237	2362	2437	2512	2587	2662	2737	2812	2887
961	1036	2213	2288	2363	2438	2513	2588	2663	2738	2813	2888
962	1037	2214	2289	2364	2439	2514	2589	2664	2739	2814	2889
963	1038	2215	2290	2365	2440	2515	2590	2665	2740	2815	2890
964	1039	2216	2291	2366	2441	2516	2591	2666	2741	2816	2891
965	1040	2217	2292	2367	2442	2517	2592	2667	2742	2817	2892
966	1041	2218	2293	2368	2443	2518	2593	2668	2743	2818	2893
967	1042	2219	2294	2369	2444	2519	2594	2669	2744	2819	2894
968	1043	2220	2295	2370	2445	2520	2595	2670	2745	2820	2895
969	1044	2221	2296	2371	2446	2521	2596	2671	2746	2821	2896
970	1045	2222	2297	2372	2447	2522	2597	2672	2747	2822	2897
971	1046	2223	2298	2373	2448	2523	2598	2673	2748	2823	2898
972	1047	2224	2299	2374	2449	2524	2599	2674	2749	2824	2899
973	1048	2225	2300	2375	2450	2525	2600	2675	2750	2825	2900
974	1049	2226	2301	2376	2451	2526	2601	2676	2751	2826	2901
2902	2977	3052	3127	3202	3277	4454	4529	4604	4679	4754	4829
2903	2978	3053	3128	3203	3278	4455	4530	4605	4680	4755	4830
2904	2979	3054	3129	3204	3279	4456	4531	4606	4681	4756	4831
2905	2980	3055	3130	3205	3280	4457	4532	4607	4682	4757	4832
2906	2981	3056	3131	3206	3281	4458	4533	4608	4683	4758	4833
2907	2982	3057	3132	3207	3282	4459	4534	4609	4684	4759	4834
2908	2983	3058	3133	3208	3283	4460	4535	4610	4685	4760	4835
2909	2984	3059	3134	3209	3284	4461	4536	4611	4686	4761	4836
2910	2985	3060	3135	3210	3285	4462	4537	4612	4687	4762	4837
2911	2986	3061	3136	3211	3286	4463	4538	4613	4688	4763	4838
2912	2987	3062	3137	3212	3287	4464	4539	4614	4689	4764	4839
2913	2988	3063	3138	3213	3288	4465	4540	4615	4690	4765	4840
2914	2989	3064	3139	3214	3289	4466	4541	4616	4691	4766	4841
2915	2990	3065	3140	3215	3290	4467	4542	4617	4692	4767	4842
2916	2991	3066	3141	3216	3291	4468	4543	4618	4693	4768	4843
2917	2992	3067	3142	3217	3292	4469	4544	4619	4694	4769	4844
2918	2993	3068	3143	3218	3293	4470	4545	4620	4695	4770	4845
2919	2994	3069	3144	3219	3294	4471	4546	4621	4696	4771	4846
2920	2995	3070	3145	3220	3295	4472	4547	4622	4697	4772	4847
2921	2996	3071	3146	3221	3296	4473	4548	4623	4698	4773	4848
2922	2997	3072	3147	3222	3297	4474	4549	4624	4699	4774	4849
2923	2998	3073	3148	3223	3298	4475	4550	4625	4700	4775	4850
2924	2999	3074	3149	3224	3299	4476	4551	4626	4701	4776	4851
2925	3000	3075	3150	3225	3300	4477	4552	4627	4702	4777	4852
2926	3001	3076	3151	3226	3301	4478	4553	4628	4703	4778	4853
2927	3002	3077	3152	3227	3302	4479	4554	4629	4704	4779	4854
2928	3003	3078	3153	3228	3303	4480	4555	4630	4705	4780	4855
2929	3004	3079	3154	3229	3304	4481	4556	4631	4706	4781	4856
2930	3005	3080	3155	3230	3305	4482	4557	4632	4707	4782	4857
2931	3006	3081	3156	3231	4408	4483	4558	4633	4708	4783	4858
2932	3007	3082	3157	3232	4409	4484	4559	4634	4709	4784	4859
2933	3008	3083	3158	3233	4410	4485	4560	4635	4710	4785	4860
2934	3009	3084	3159	3234	4411	4486	4561	4636	4711	4786	4861
2935	3010	3085	3160	3235	4412	4487	4562	4637	4712	4787	4862
2936	3011	3086	3161	3236	4413	4488	4563	4638	4713	4788	4863
2937	3012	3087	3162	3237	4414	4489	4564	4639	4714	4789	4864

-continued

APPENDIX A

2938	3013	3088	3163	3238	4415	4490	4565	4640	4715	4790	4865
2939	3014	3089	3164	3239	4416	4491	4566	4641	4716	4791	4866
2940	3015	3090	3165	3240	4417	4492	4567	4642	4717	4792	4867
2941	3016	3091	3166	3241	4418	4493	4568	4643	4718	4793	4868
2942	3017	3092	3167	3242	4419	4494	4569	4644	4719	4794	4869
2943	3018	3093	3168	3243	4420	4495	4570	4645	4720	4795	4870
2944	3019	3094	3169	3244	4421	4496	4571	4646	4721	4796	4871
2945	3020	3095	3170	3245	4422	4497	4572	4647	4722	4797	4872
2946	3021	3096	3171	3246	4423	4498	4573	4648	4723	4798	4873
2947	3022	3097	3172	3247	4424	4499	4574	4649	4724	4799	4874
2948	3023	3098	3173	3248	4425	4500	4575	4650	4725	4800	4875
2949	3024	3099	3174	3249	4426	4501	4576	4651	4726	4801	4876
2950	3025	3100	3175	3250	4427	4502	4577	4652	4727	4802	4877
2951	3026	3101	3176	3251	4428	4503	4578	4653	4728	4803	4878
2952	3027	3102	3177	3252	4429	4504	4579	4654	4729	4304	4879
2953	3028	3103	3178	3253	4430	4505	4580	4655	4730	4805	4880
2954	3029	3104	3179	3254	4431	4506	4581	4656	4731	4806	4881
2955	3030	3105	3180	3255	4432	4507	4582	4657	4732	4807	4882
2956	3031	3106	3181	3256	4433	4508	4583	4658	4733	4808	4883
2957	3032	3107	3182	3257	4434	4509	4584	4659	4734	4809	4884
2958	3033	3108	3183	3258	4435	4510	4585	4660	4735	4810	4885
2959	3034	3109	3184	3259	4436	4511	4586	4661	4736	4811	4886
2960	3035	3110	3185	3260	4437	4512	4587	4662	4737	4812	4887
2961	3036	3111	3186	3261	4438	4513	4588	4663	4738	4813	4888
2962	3037	3112	3187	3262	4439	4514	4589	4664	4739	4314	4889
2963	3038	3113	3183	3263	4440	4515	4590	4665	4740	4815	4890
2964	3039	3114	3189	3264	4441	4516	4591	4666	4741	4816	4891
2965	3040	3115	3190	3265	4442	4517	4592	4667	4742	4817	4892
2966	3041	3116	3191	3266	4443	4518	4593	4668	4743	4818	4893
2967	3042	3117	3192	3267	4444	4519	4594	4669	4744	4819	4894
2968	3043	3118	3193	3268	4445	4520	4595	4670	4745	4820	4895
2969	3044	3119	3194	3269	4446	4521	4596	4671	4746	4821	4896
2970	3045	3120	3195	3270	4447	4522	4597	4672	4747	4822	4897
2971	3046	3121	3196	3271	4448	4523	4598	4673	4748	4823	4898
2972	3047	3122	3197	3272	4449	4524	4599	4674	4749	4824	4899
2973	3048	3123	3198	3273	4450	4525	4600	4675	4750	4825	4900
2974	3049	3124	3199	3274	4451	4526	4601	4676	4751	4826	4901
2975	3050	3125	3200	3275	4452	4527	4602	4677	4752	4827	4902
2976	3051	3126	3201	3276	4453	4528	4603	4678	4753	4828	4903
4904	4979	5054	5129	5204	5279	5354	5429	5504	6681	6756	6831
4905	4980	5055	5130	5205	5280	5355	5430	5505	6682	6757	6832
4906	4981	5056	5131	5206	5281	5356	5431	5506	6683	6728	6833
4907	4982	5057	5132	5207	5282	5357	5432	5507	6684	6759	6834
4908	4983	5058	5133	5208	5283	5358	5433	5508	6685	6760	6835
4909	4984	5059	5134	5209	5284	5359	5434	5509	6686	6761	6836
4910	4985	5060	5135	5210	5285	5360	5435	6612	6687	6762	6837
4911	4986	5061	5136	5211	5286	5361	5436	6613	6688	6763	6838
4912	4987	5062	5137	5212	5287	5362	5437	6614	6689	6764	6839
4913	4988	5063	5138	5213	5288	5363	5438	6615	6690	6765	6840
4914	4989	5064	5139	5214	5289	5364	5439	6616	6691	6766	6841
4915	4990	5065	5140	5215	5290	5365	5440	6617	6692	6767	6842
4916	4991	5066	5141	5216	5291	5366	5441	6615	6693	6768	6843
4917	4992	5067	5142	5217	5292	5367	5442	6619	6694	6769	6844
4915	4993	5068	5143	5218	5293	5368	5443	6620	6695	6770	6845
4919	4994	5069	5144	5219	5294	5369	5444	6621	6696	6771	6846
4920	4995	5070	5145	5220	5295	5370	5445	6622	6697	6772	6847
4921	4996	5071	5146	5221	5296	5371	5446	6623	6698	6773	6848
4922	4997	5072	5147	5222	5297	5372	5447	6624	6699	6774	6849
4923	4995	5073	5148	5223	5298	5373	5448	6625	6700	6775	6850
4924	4999	5074	5149	5224	5299	5374	5449	6626	6701	6776	6551
4925	5000	5075	5150	5225	5300	5375	5450	6627	6702	6777	6852
4926	5001	5076	5151	5226	5301	5376	5451	6628	6703	6778	6853
4927	5002	5077	5152	5227	5302	5377	5452	6629	6704	6779	6854
4928	5003	5078	5153	5228	5303	5378	5453	6630	6705	6780	6855
4929	5004	5079	5154	5229	5304	5379	5454	6631	6706	6781	6856
4930	5005	5080	5155	5230	5305	5380	5455	6632	6707	6782	6857
4931	5006	5081	5156	5231	5306	5381	5456	6633	6708	6783	6858
4932	5007	5082	5157	5232	5307	5382	5457	6634	6709	6784	6859
4933	5008	5083	5158	5233	5308	5383	5458	6635	6710	6755	6860
4934	5009	5084	5159	5234	5309	5384	5459	6636	6711	6786	6861
4935	5010	5085	5160	5235	5310	5385	5460	6637	6712	6787	6862
4936	5011	5086	5161	5236	5311	5386	5461	6638	6713	6788	6863
4937	5012	5087	5162	5237	5312	5387	5462	6639	6714	6789	6564
4938	5013	5088	5163	5238	5313	5388	5463	6640	6715	6790	6865
4939	5014	5089	5164	5239	5314	5389	5464	6641	6716	6791	6866
4940	5015	5090	5165	5240	5315	5390	5465	6642	6717	6792	6867
4941	5016	5091	5166	5241	5316	5391	5466	6643	6718	6793	6868

-continued

APPENDIX A

4942	5017	5092	5167	5242	5317	5392	5467	6644	6719	6794	6869
4943	5018	5093	5168	5243	5318	5393	5468	6645	6720	6795	6870
4944	5019	5094	5169	5244	5319	5394	5469	6646	6721	6796	6871
4945	5020	5095	5170	5245	5320	5395	5470	6647	6722	6797	6872
4946	5021	5096	5171	5246	5321	5396	5471	6648	6723	6798	6873
4947	5022	5097	5172	5247	5322	5397	5472	6649	6724	6799	6874
4948	5023	5095	5173	5248	5323	5398	5473	6650	6725	6800	6875
4949	5024	5099	5174	5249	5324	5399	5474	6651	6726	6801	6876
4950	5025	5100	5175	5250	5325	5400	5475	6652	6727	6802	6877
4951	5026	5101	5176	5251	5326	5401	5476	6653	6728	6803	6878
4952	5027	5102	5177	5252	5327	5402	5477	6654	6729	6804	6879
4953	5028	5103	5178	5253	5325	5403	5478	6655	6730	6805	6880
4954	5029	5104	5179	5254	5329	5404	5479	6656	6731	6806	6881
4955	5030	5105	5180	5255	5330	5405	5480	6657	6732	6807	6882
4956	5031	5106	5181	5256	5331	5406	5481	6658	6733	6808	6883
4957	5032	5107	5182	5257	5332	5407	5482	6659	6734	6809	6884
4958	5033	5108	5153	5258	5333	5408	5483	6660	6735	6810	6885
4959	5034	5109	5184	5259	5334	5409	5484	6661	6736	6811	6886
4960	5035	5110	5185	5260	5335	5410	5485	6662	6737	6812	6887
4961	5036	5111	5186	5261	5336	5411	5486	6663	6738	6813	6888
4962	5037	5112	5187	5262	5337	5412	5487	6664	6739	6814	6889
4963	5038	5113	5158	5263	5338	5413	5488	6665	6740	6815	6890
4964	5039	5114	5159	5264	5339	5414	5489	6666	6741	6816	6891
4965	5040	5115	5190	5265	5340	5415	5490	6667	6742	6817	6592
4966	5041	5116	5191	5266	5341	5416	5491	6668	6743	6818	6893
4967	5042	5117	5192	5267	5342	5417	5492	6669	6744	6819	6894
4968	5043	5118	5193	5268	5343	5418	5493	6670	6745	6820	6895
4969	5044	5119	5194	5269	5344	5419	5494	6671	6746	6821	6896
4970	5045	5120	5195	5270	5345	5420	5495	6672	6747	6822	6897
4971	5046	5121	5196	5271	5346	5421	5496	6673	6748	6823	6898
4972	5047	5122	5197	5272	5347	5422	5497	6674	6749	6824	6899
4973	5048	5123	5198	5273	5348	5423	5498	6675	6750	6825	6900
4974	5049	5124	5199	5274	5349	5424	5499	6676	6751	6826	6901
4975	5050	5125	5200	5275	5350	5425	5500	6677	6752	6827	6902
4976	5051	5126	5201	5276	5351	5426	5501	6678	6753	6828	6903
4977	5052	5127	5202	5277	5352	5427	5502	6679	6754	6529	6904
4978	5053	5128	5203	5278	5353	5428	5503	6680	6755	6830	6905
6906	6930	6954	6978	7002	7026	7050	7074	7098	7122	7146	7170
6907	6931	6955	6979	7003	7027	7051	7075	7099	7123	7147	7171
6908	6932	6956	6980	7004	7028	7052	7076	7100	7124	7148	7172
6909	6933	6957	6981	7005	7029	7053	7077	7101	7125	7149	7173
6910	6934	6958	6982	7006	7030	7054	7078	7102	7126	7150	7174
6911	6935	6959	6983	7007	7031	7055	7079	7103	7127	7151	7175
6912	6936	6960	6984	7008	7032	7056	7080	7104	7128	7152	7176
6913	6937	6961	6985	7009	7033	7057	7081	7105	7129	7153	7177
6914	6938	6962	6986	7010	7034	7058	7082	7106	7130	7154	7178
6915	6939	6963	6987	7011	7035	7059	7083	7107	7131	7155	7179
6916	6940	6964	6988	7012	7036	7060	7084	7108	7132	7156	7180
6917	6941	6965	6989	7013	7037	7061	7085	7109	7133	7157	7181
6918	6942	6966	6990	7014	7038	7062	7086	7110	7134	7158	7182
6919	6943	6967	6991	7015	7039	7063	7087	7111	7135	7159	7183
6920	6944	6968	6992	7016	7040	7064	7088	7112	7136	7160	7184
6921	6945	6969	6993	7017	7041	7065	7089	7113	7137	7161	
6922	6946	6970	6994	7018	7042	7066	7090	7114	7138	7162	
6923	6947	6971	6995	7019	7043	7067	7091	7115	7139	7163	
6924	6948	6972	6996	7020	7044	7068	7092	7116	7140	7164	
6925	6949	6973	6997	7021	7045	7069	7093	7117	7141	7165	
6926	6950	6974	6998	7022	7046	7070	7094	7118	7142	7166	
6927	6951	6975	6999	7023	7047	7071	7095	7119	7143	7167	
6928	6952	6976	7000	7024	7048	7072	7096	7120	7144	7168	
6929	6953	6977	7001	7025	7049	7073	7097	7121	7145	7169	

The invention claimed is:

1. A bearer channel modification system for a multiple access spread-spectrum communication system including a plurality of information signals each having several different channel rates which information signals are transmitted as a plurality of message code channels over an Radio Frequency (RF) channel as a Code Division Multiplexed (CDM) signal, each of the plurality of message code channels being able to convey information at a predetermined information channel rate, the system comprising

means for providing a plurality of call type signals corresponding to the information signal rates for the information signals;

a transmitter including a first information channel mode modification means responsive to the call type signal for changing the information signal from a first one of the message code signals to a second one of the message code signals which second message code signal has a different information channel rate than the first message code signal; and

a receiver including a second information channel mode modification means responsive to the call type signal

for changing a received information signal from the first message code signal to the second message code signal to receive the information signal at the different information channel rate.

2. A bearer channel modification system according to claim **1** wherein the transmitter further includes means for sequentially a) sending the message data combined with the first message code signal to the substantial exclusion of the second message code signal, b) concurrently sending the message data combined with the first message code signal and the message data combined with the second message code signal and c) sending the message data combined with the second message code signal to the substantial exclusion of the first message code signal.

3. A bearer channel modification system according to claim **1** wherein the transmitter further includes:

means for synchronizing the transmitter to the receiver on a sub-epoch boundary;

means for sending the message signal combined with the first message code signal prior to the sub-epoch boundary and for sending the message signal combined with the second message code signal to the substantial exclusion of the first message code signal subsequent to the sub-epoch boundary.

4. A multiple access spread-spectrum communication system for dynamically changing a transmission rate of a plurality of information signals received simultaneously over telecommunication lines by a base station and transmitted to a subscriber through a plurality of spread-spectrum message channels, the system comprising

a) a base station, connected to a remote call-processor which provides a call type signal identifying an information signal rate of the respective information signal and a conversion method for the respective information signal; comprising:

a system channel controller which assigns each of the information signals and call type signals to a respective spread-spectrum message channel;

first information channel mode modification means connected to the system channel controller and responsive to the call type signal for changing the combination of the respective information signal from one spread-spectrum message channel to another pre-determined spread-spectrum message channel which supports a different information channel rate; and

b) a subscriber unit comprising:

a plurality of despreading means, each of the despreading means for recovering a respective one of the information signals and a respective one of the call type signals from a respective one of the spread-spectrum message channels;

second information channel mode modification means responsive to the call type signal for selectively assigning one of the despreading means to a respective one of the spread spectrum message channels which supports the different information rate; and a signal conversion means responsive to the call type signal for selectively converting the despread information signal into a digital data signal.

5. A bearer channel modification system for a multiple access spread-spectrum communication system including a plurality of information signals each having a respective rate, the system comprising

a plurality of message code channels, each of the channels being able to convey information at a respective predetermined information channel rate, wherein an information signal is transmitted as at least one message code channel as a Code Division Multiplexed (CDM) signal

means for providing a plurality of call type signals corresponding to the information signal rates for the information signals;

a transmitter including a first information channel mode modification means responsive to the call type signal for changing the information signal from a first one of the message code signals to a second one of the message code signals which second message code signal has a respective information channel rate; and

a receiver including a second information channel mode modification means responsive to the call type signal for changing a received information signal from the first message code signal to the second message code signal to receive the information signal at the respective information channel rate.

6. A bearer channel modification system according to claim **5** further including:

means, coupled to the transmitter, for changing the predetermined information channel rate of at least one of the message code channels from a first rate to a second rate; and

means, coupled to the receiver and responsive to a signal provided by the transmitter for conditioning the receiver to receive the information signal provided via the one message code channel at the first rate before the predetermined information channel rate is changed and at the second rate after the predetermined information channel rate is changed.

* * * * *

UNITED STATES PATENT AND TRADEMARK OFFICE

CERTIFICATE OF CORRECTION

PATENT NO. : 6,215,778 B1
DATED : April 10, 2001
INVENTOR(S) : Lomp et al.

It is certified that error appears in the above-identified patent and that said Letters Patent is hereby corrected as shown below:

Column 8,
Line 59, delete "OF" and insert thereof -- RF --.

Column 10,
Line 18, before "M-ary Phase Shift Keying", delete "MSK" and insert therefor -- MPSK --.

Column 11,
Line 26, delete "SH" and insert therefor -- SHF --.
Line 28, delete "MS" and insert therefor -- MHZ --.

Column 12,
Line 28, delete "PC" and insert therefor -- MPC --.

Column 14,
Line 64, delete "(LAW" and insert therefor -- (LAXPT) --.

Column 15,
Line 36, delete "ARCH" and insert therefor -- TRCH --.

Column 17,
Line 58, delete "sequenced" and insert therefor -- sequences --.

Column 18,
Line 42, delete "x^1" and insert therefor -- 1 --.
Line 62, delete "6" and insert therefor -- δ --.

Column 22,
Line 54, delete "C3C*" and insert therefor -- C3$\oplus$C* --.

Column 27,
Line 56, delete "$P_{Tc}(i)$" and insert therefor -- $P_{Tc}(t)$ --.

Column 33,
Line 57, delete "c((n+i))" and insert therefor -- c((n+i)T) --.

Column 34,
Line 1, delete "AMP" and insert therefor -- AMF --.

UNITED STATES PATENT AND TRADEMARK OFFICE

CERTIFICATE OF CORRECTION

PATENT NO. : 6,215,778 B1
DATED : April 10, 2001
INVENTOR(S) : Lomp et al.

It is certified that error appears in the above-identified patent and that said Letters Patent is hereby corrected as shown below:

Column 38,
Line 59, delete "Bach" and insert therefor -- Each --.

Column 40,
Lines 31 and 58, delete "MW" and insert therefor -- MIU --.

Column 45,
Line 10, delete "AID" and insert therefor -- A/D --.
Line 66, delete "AMP" and insert therefor -- AMF --.

Column 46,
Line 7, delete "AID" and insert therefor -- A/D --.

Column 48,
Lines 44, 45 and 55, delete "AMP" and insert therefor -- AMF --.

Column 50,
Line 33, delete "[m]" and insert therefor -- [k] --.

Column 58,
Line 64, delete "CPM" and insert therefor -- CFM --.

Column 72,
Line 17, delete "staved" and insert therefor -- slaved --.

Column 73,
Line 30, delete "-361" and insert therefor -- 361 --.

Signed and Sealed this

Twenty-sixth Day of November, 2002

Attest:

Attesting Officer

JAMES E. ROGAN
Director of the United States Patent and Trademark Office

EXHIBIT G

US006289004B1

(12) **United States Patent**
Mesecher et al.

(10) **Patent No.: US 6,289,004 B1**
(45) **Date of Patent: Sep. 11, 2001**

(54) **ADAPTIVE CANCELLATION OF FIXED INTERFERERS**

(75) Inventors: **David K. Mesecher**, Huntington Station; **Fatih M. Ozluturk**, Port Washington, both of NY (US)

(73) Assignee: **InterDigital Technology Corporation**, Wilmington, DE (US)

(*) Notice: Subject to any disclaimer, the term of this patent is extended or adjusted under 35 U.S.C. 154(b) by 0 days.

(21) Appl. No.: **09/038,922**

(22) Filed: **Mar. 12, 1998**

(51) **Int. Cl.**[7] **H04B 3/20**
(52) **U.S. Cl.** **370/286**; 375/349; 455/63; 455/278.1
(58) **Field of Search** 370/201, 310, 370/280, 286, 290; 375/346, 349, 347; 455/63, 65, 132, 133, 134, 135, 136, 137, 269, 272, 273, 278.1; 342/367, 379, 380, 381, 382, 383, 384; 343/700

(56) **References Cited**

U.S. PATENT DOCUMENTS

4,644,359 2/1987 Katagi et al. 342/379
5,694,134 12/1997 Barnes 343/700

FOREIGN PATENT DOCUMENTS

3223598 5/1991 (DE) H01Q/3/26
0684660 11/1995 (EP) H01Q/3/26

Primary Examiner—Huy D. Vu
(74) *Attorney, Agent, or Firm*—Volpe and Koenig, P.C.

(57) **ABSTRACT**

An improved base station which cancels the effects of known fixed interference sources produces a signal substantially free from the interference sources thereby increasing total channel capacity. The adaptive interference canceler system includes a main antenna for receiving signals from other communication stations and at least one directional antenna directed toward an interference source. The main and directional antennas are coupled to the adaptive canceler, which weights signals received by the directional antennas and sums the weighted signals to produce a cancellation signal. The adaptive canceler subtracts the cancellation signal from the signals received by the main antenna to provide an output signal substantially free from the interference generated by the one or more known interference sources.

4 Claims, 15 Drawing Sheets

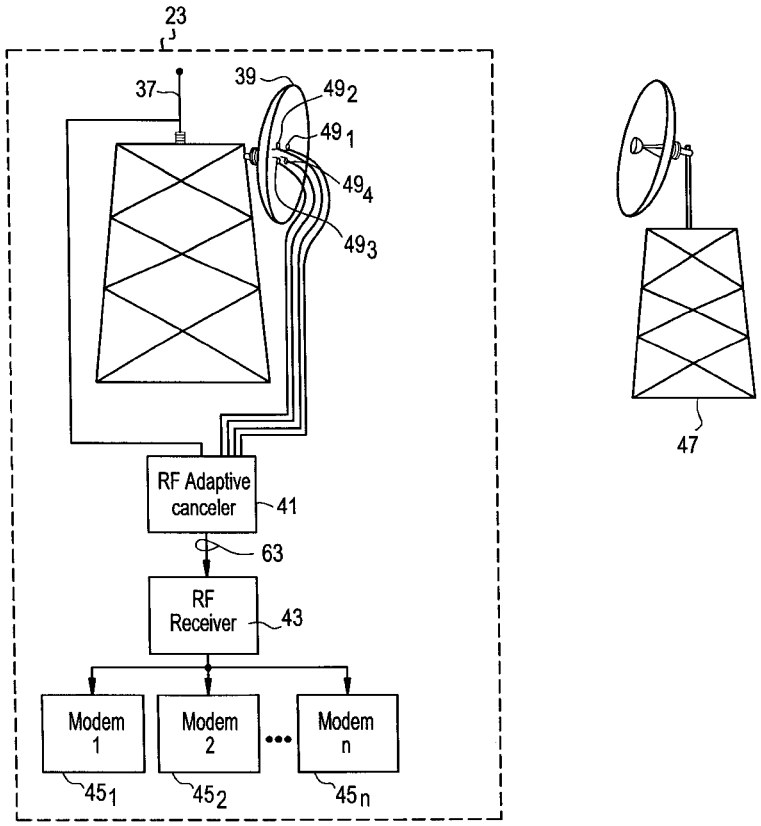

FIG.1

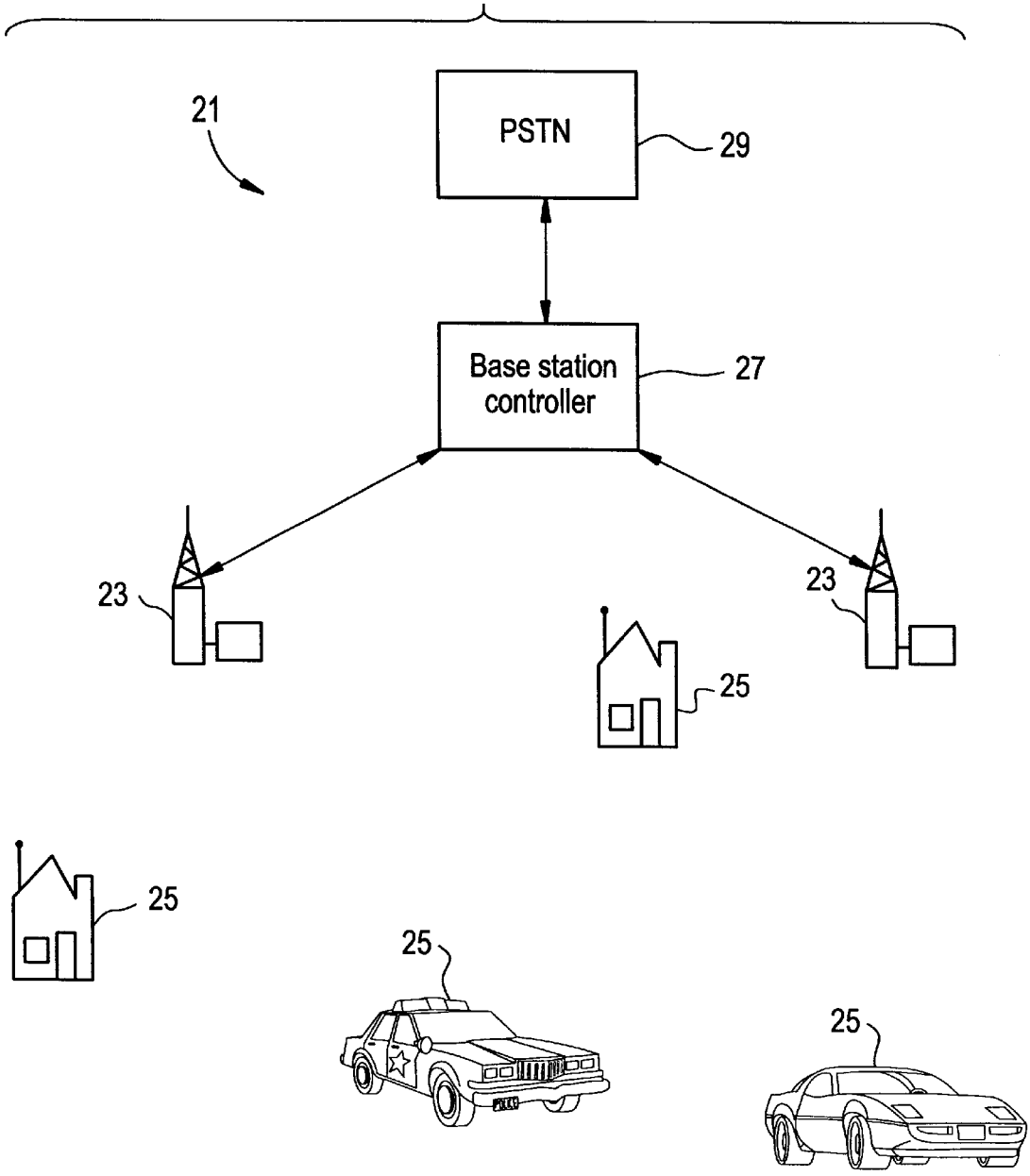

FIG.2

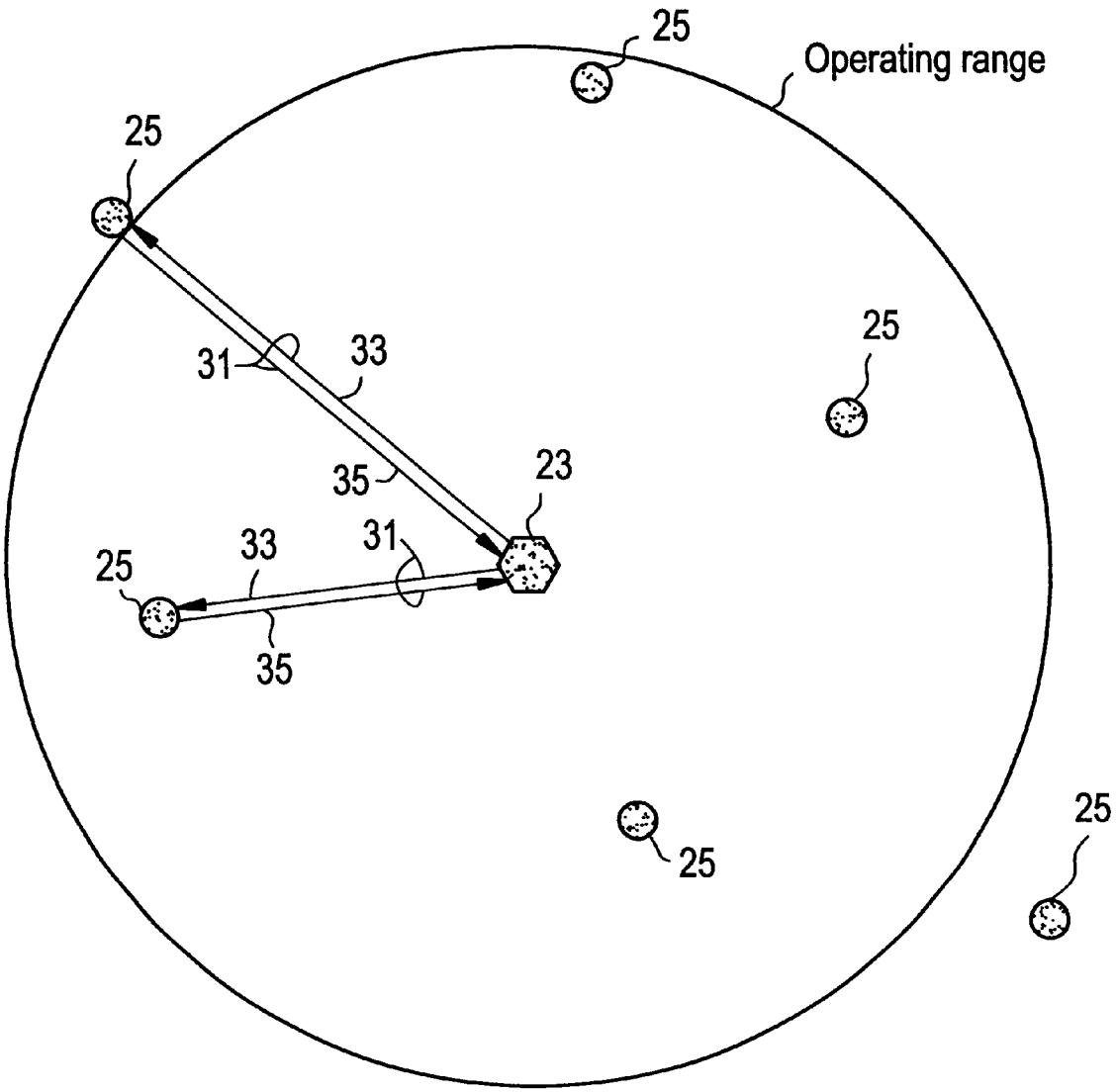

FIG.3A

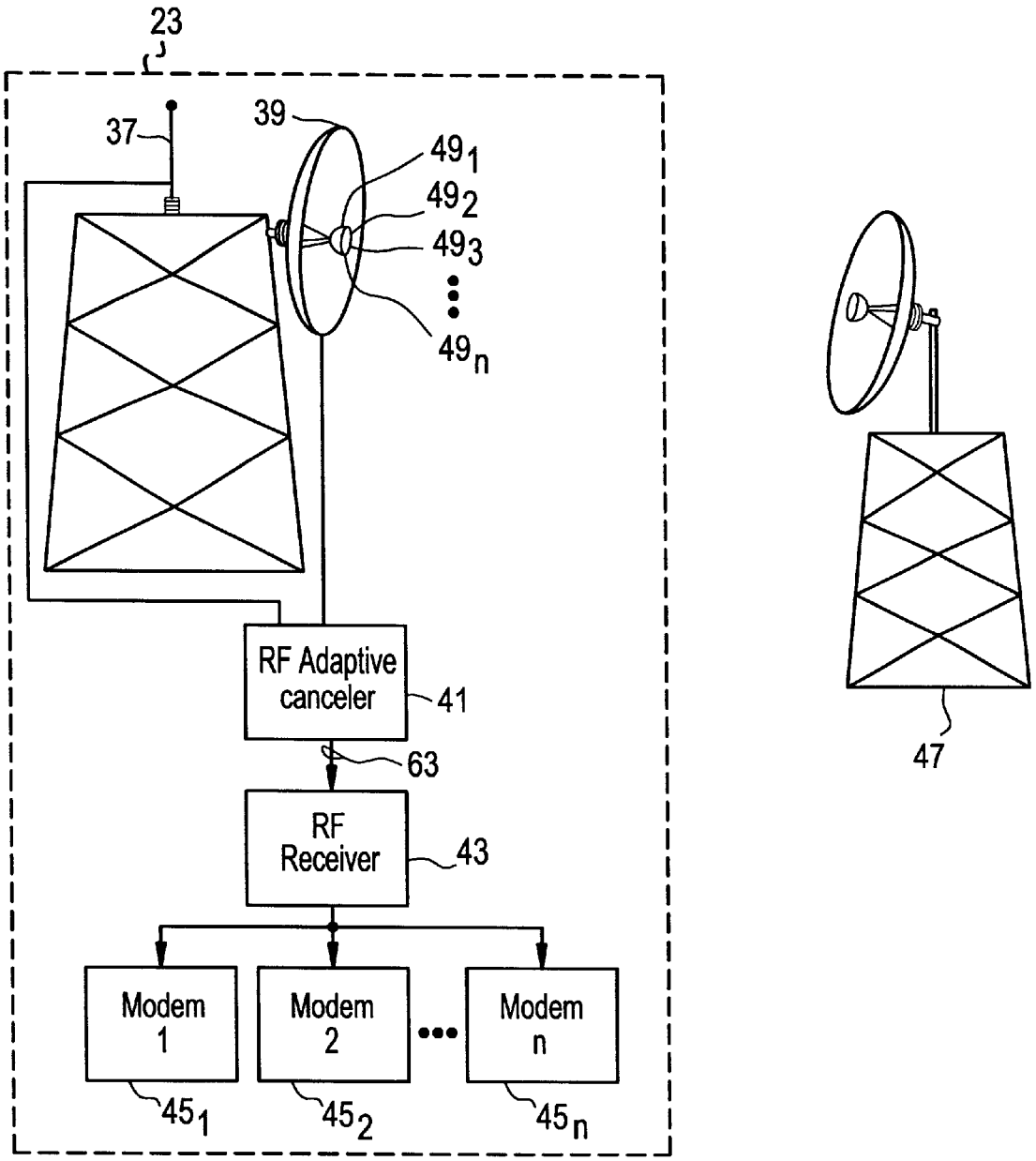
23
37
39
49_1
49_2
49_3
49_n
RF Adaptive canceler
41
63
RF Receiver
43
Modem 1
Modem 2
Modem n
45_1
45_2
45_n
47

FIG.3B

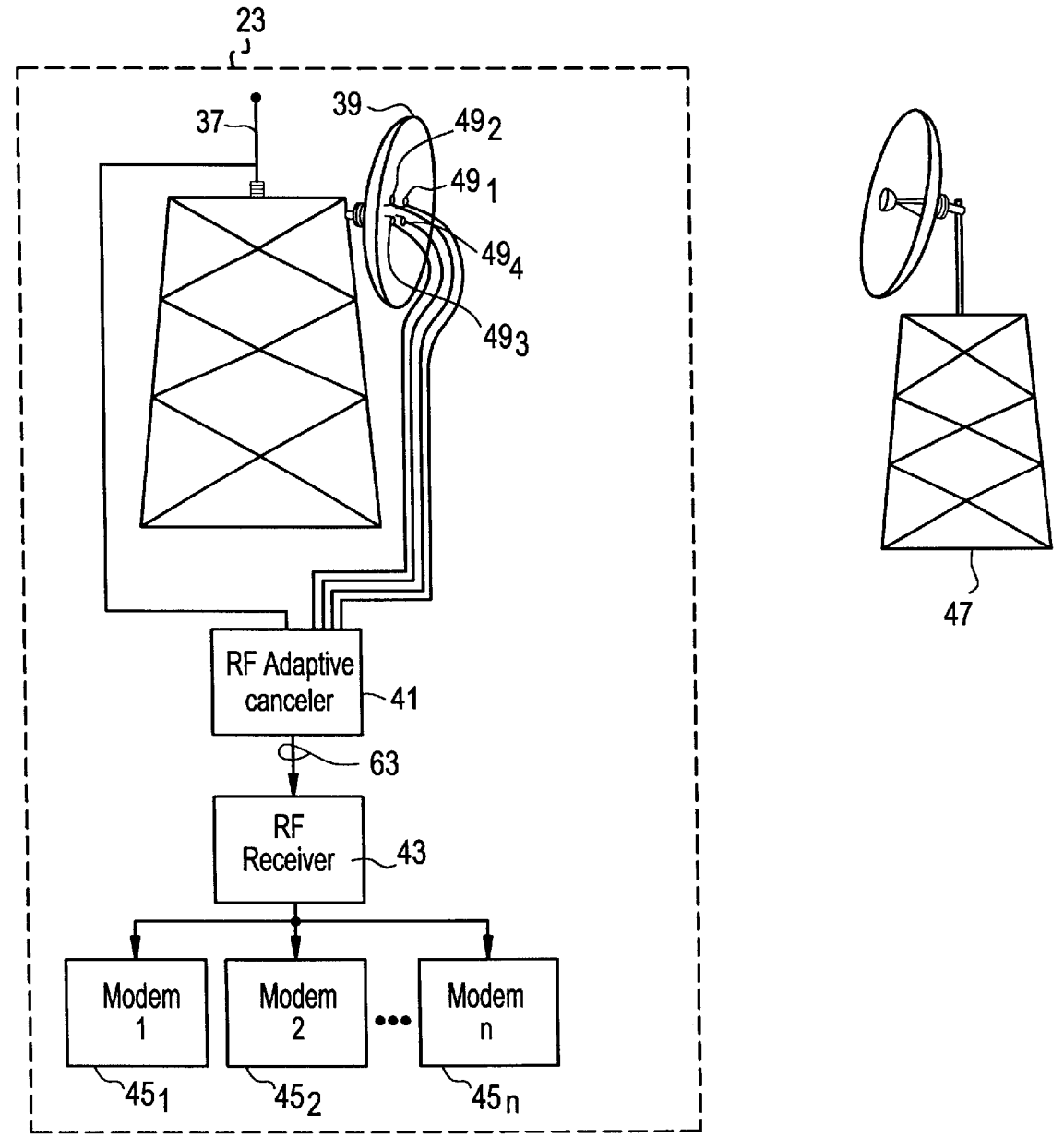
23
37
39
49 2
49 1
49 4
49 3
RF Adaptive canceler
41
63
RF Receiver
43
Modem 1
Modem 2
Modem n
45 1
45 2
45 n
47

FIG. 4

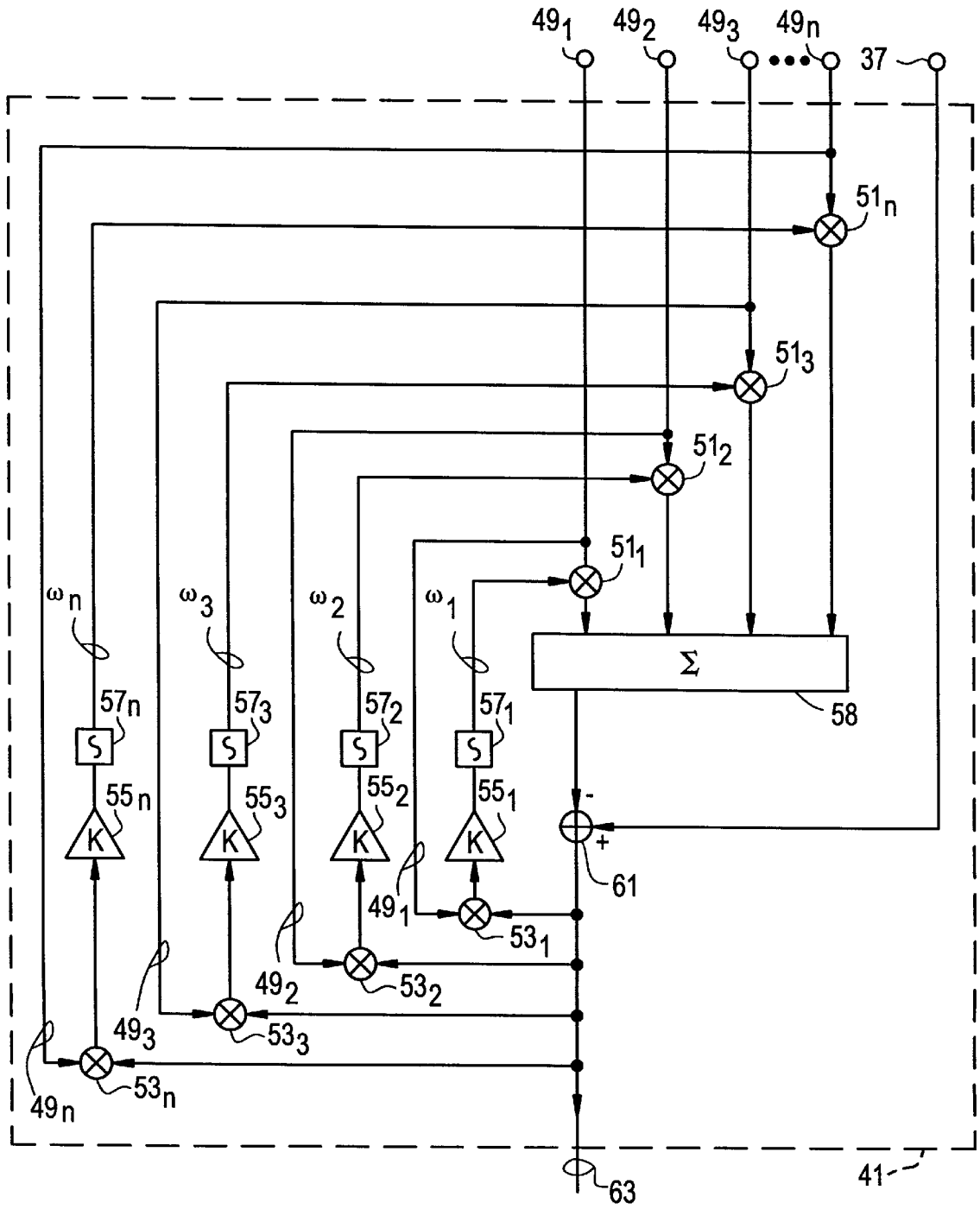
49 1
49 2
49 3
49 n
37
51 n
51 3
51 2
51 1
ω n
ω 3
ω 2
ω 1
Σ
58
57 n
57 3
57 2
57 1
S
55 n
55 3
55 2
55 1
K
61
+
-
49 1
53 1
49 2
53 2
49 3
53 3
49 n
53 n
63
41

FIG.5

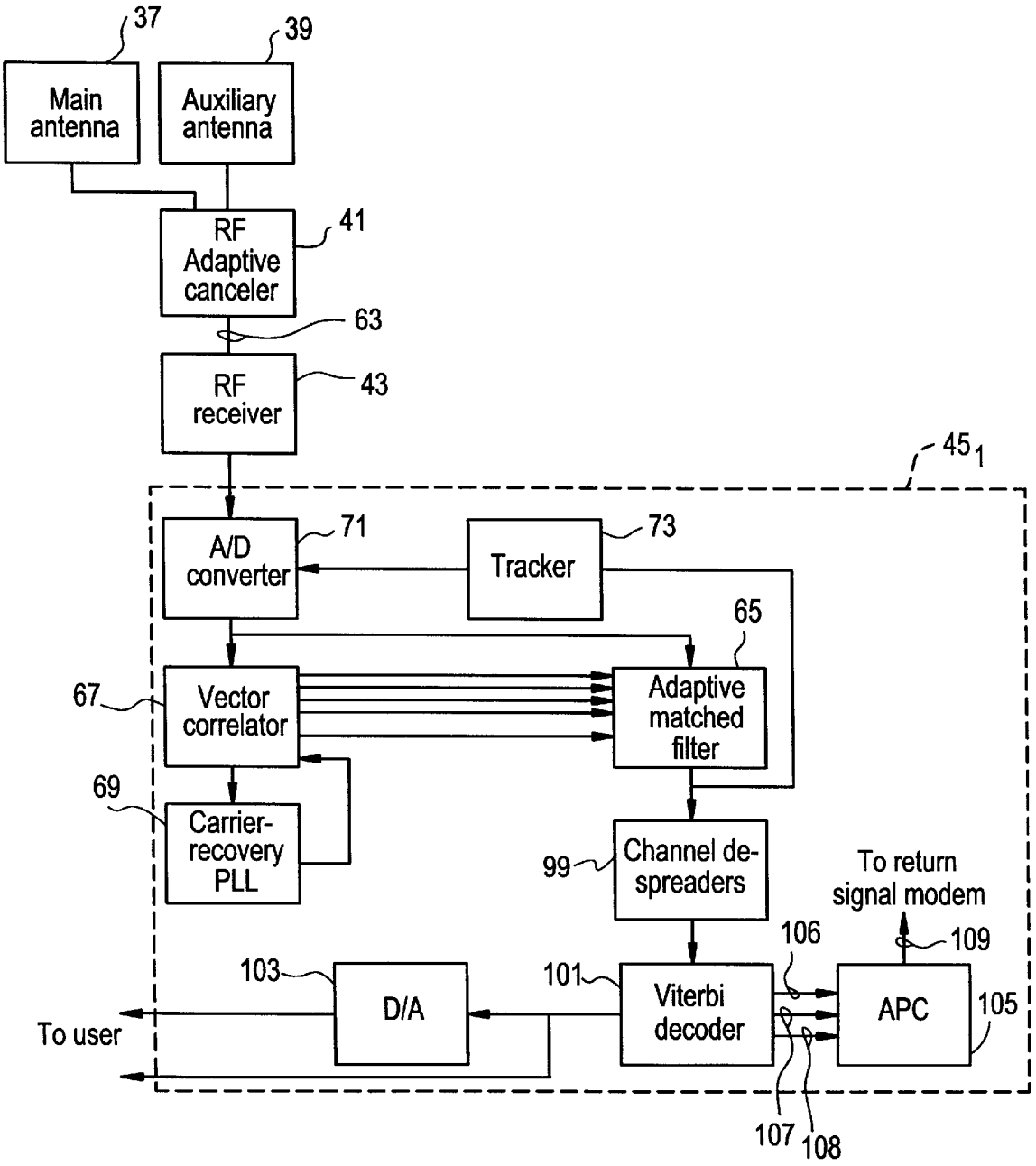
37
39
Main antenna
Auxiliary antenna
RF Adaptive canceler
41
63
RF receiver
43
45 1
A/D converter
71
Tracker
73
65
67
Vector correlator
Adaptive matched filter
69
Carrier-recovery PLL
99
Channel de-spreaders
To return signal modem
106
109
103
D/A
101
Viterbi decoder
APC
105
To user
107
108

FIG. 6

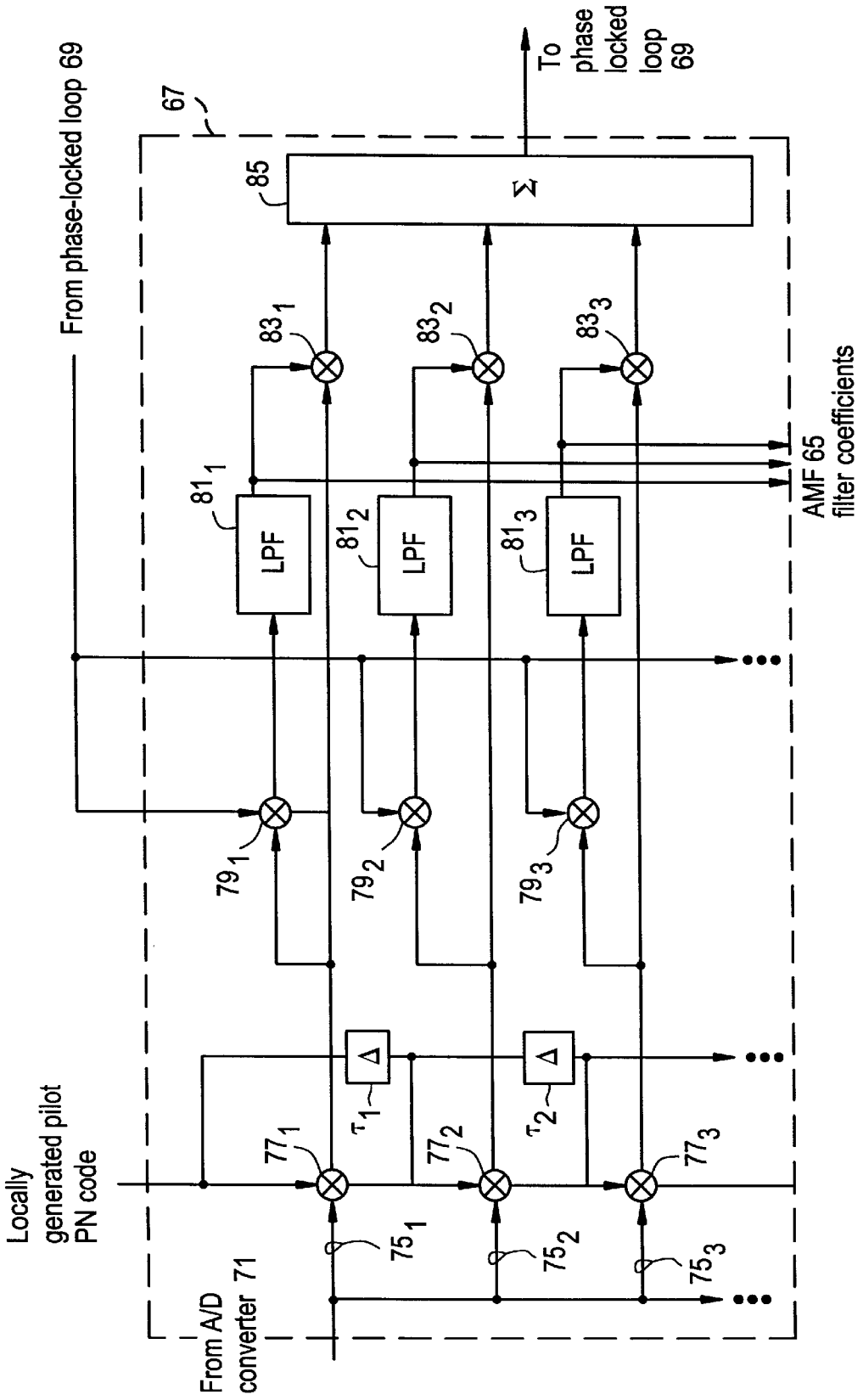
From phase-locked loop 69
67
To phase locked loop 69
85
Σ
83_1
83_2
83_3
81_1
81_2
81_3
LPF
LPF
LPF
AMF 65 filter coefficients
79_1
79_2
79_3
Δ
Δ
τ_1
τ_2
77_1
77_2
77_3
75_1
75_2
75_3
Locally generated pilot PN code
From A/D converter 71

FIG.7

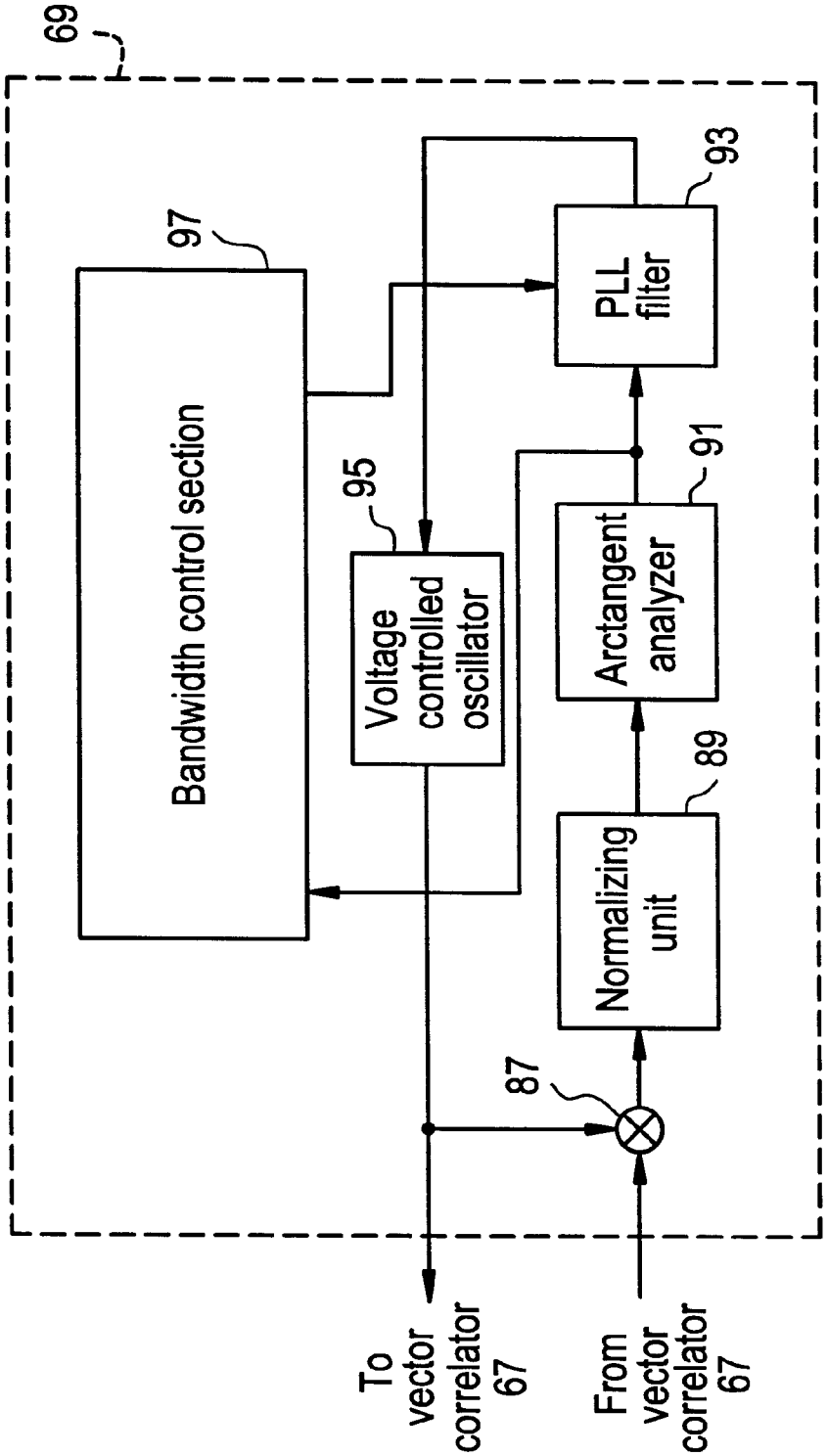
69
97
Bandwidth control section
93
PLL filter
95
Voltage controlled oscillator
91
Arctangent analyzer
89
Normalizing unit
87
To vector correlator 67
From vector correlator 67

FIG.8A

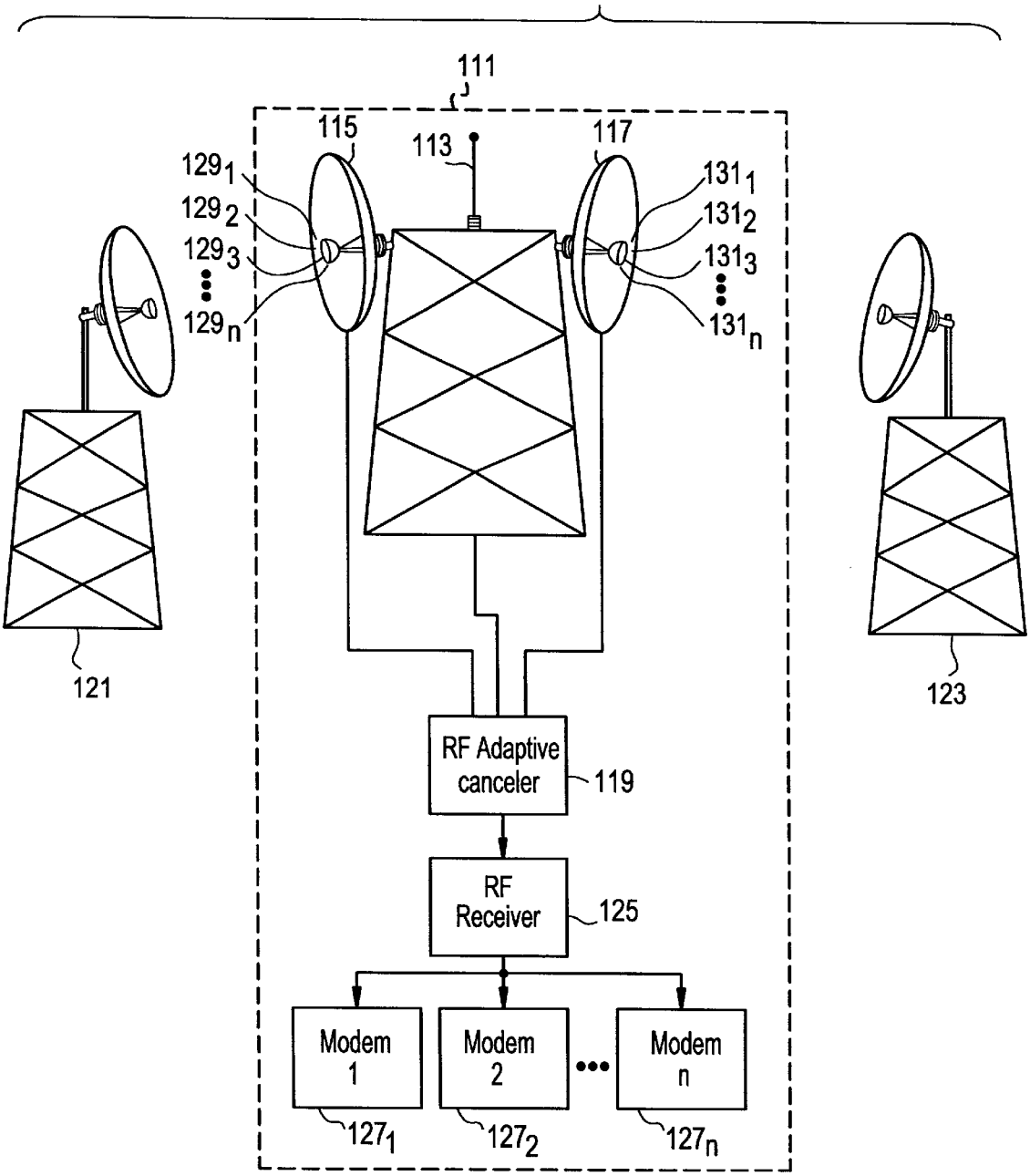
111
115
113
117
129_1
129_2
129_3
129_n
131_1
131_2
131_3
131_n
121
123
RF Adaptive canceler
119
RF Receiver
125
Modem 1
Modem 2
Modem n
127_1
127_2
127_n

FIG.8B

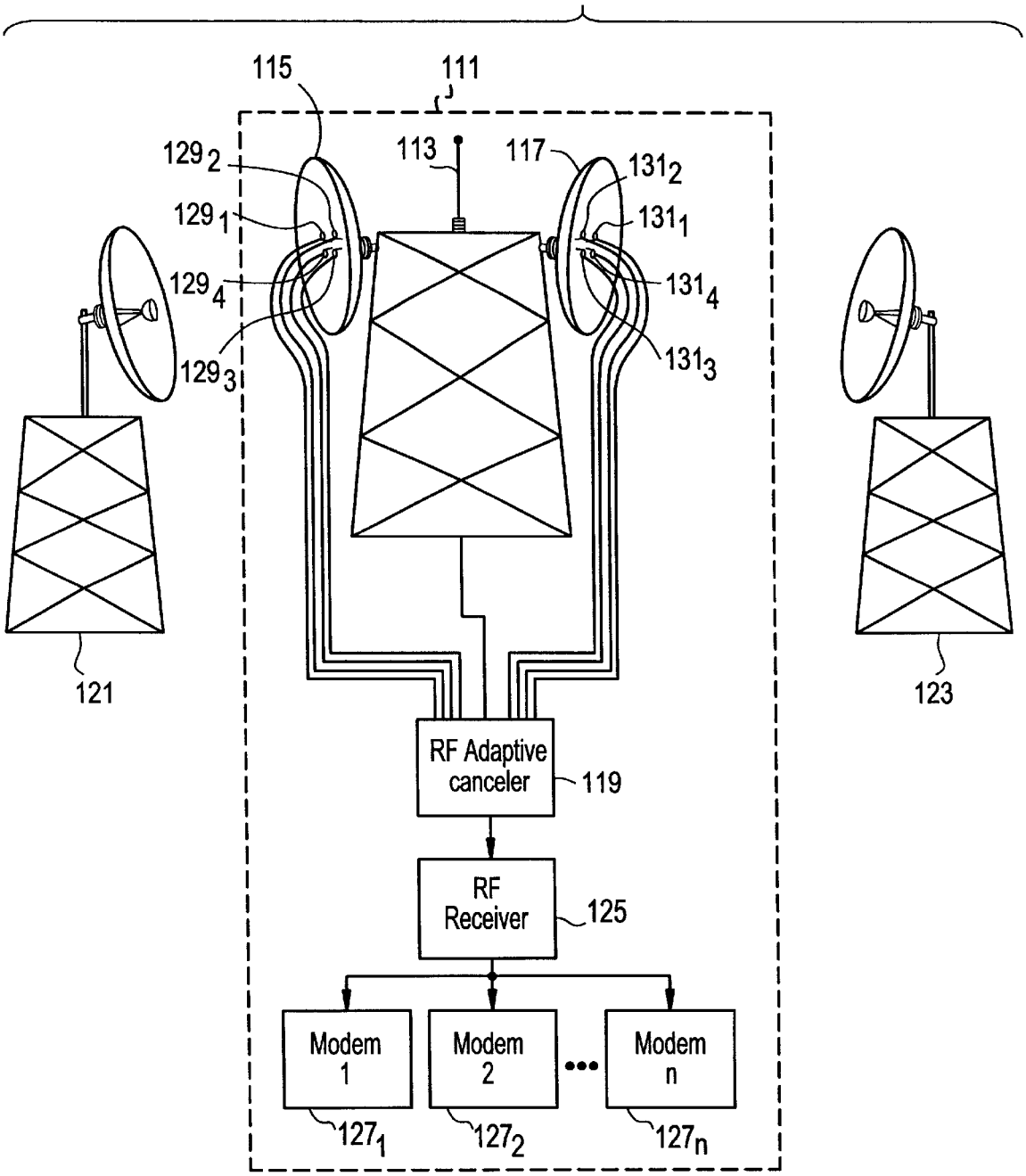
115
111
113
117
129_2
129_1
129_4
129_3
131_2
131_1
131_4
131_3
121
123
RF Adaptive canceler
119
RF Receiver
125
Modem 1
Modem 2
Modem n
127_1
127_2
127_n

FIG. 9

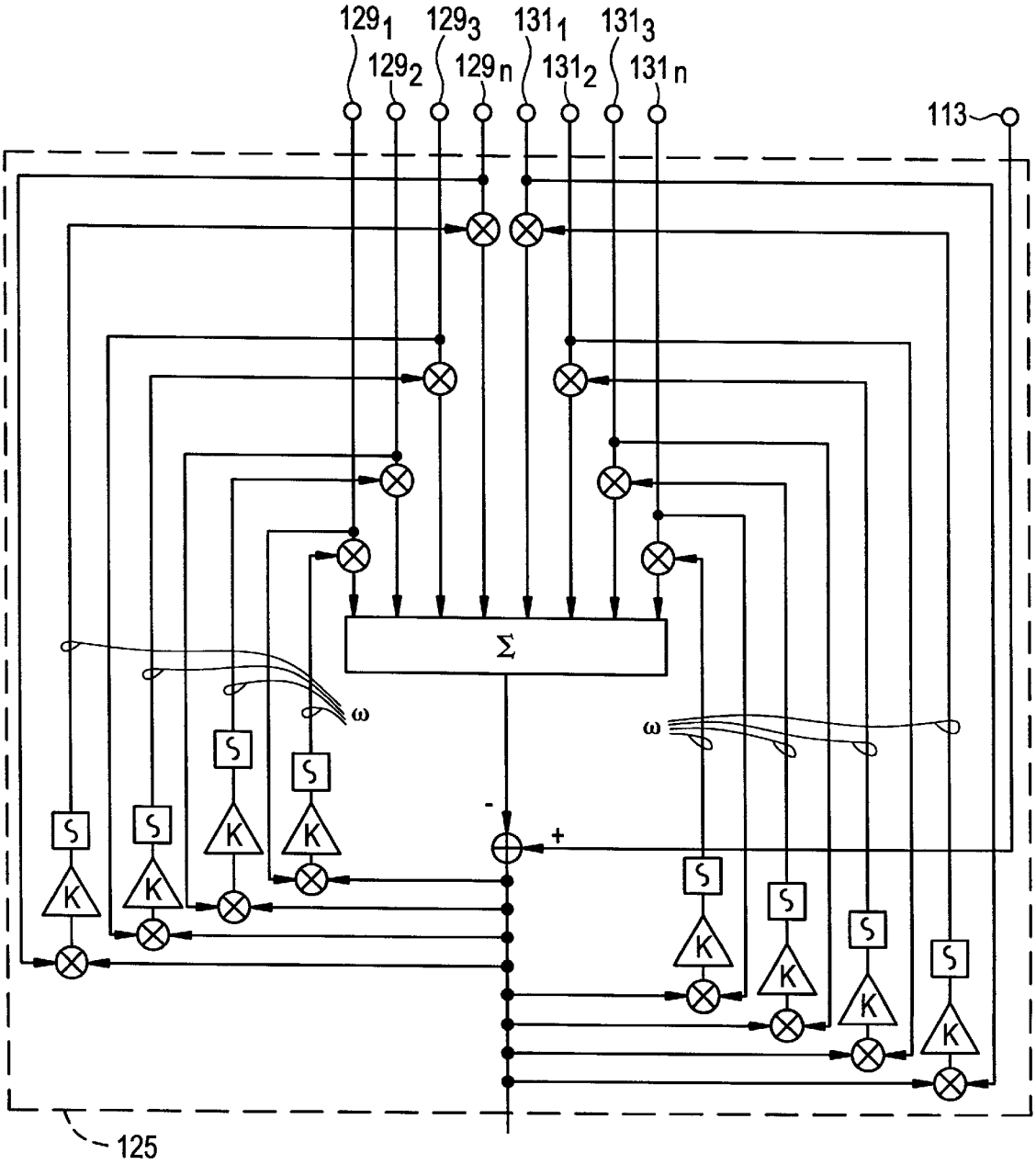

FIG. 10

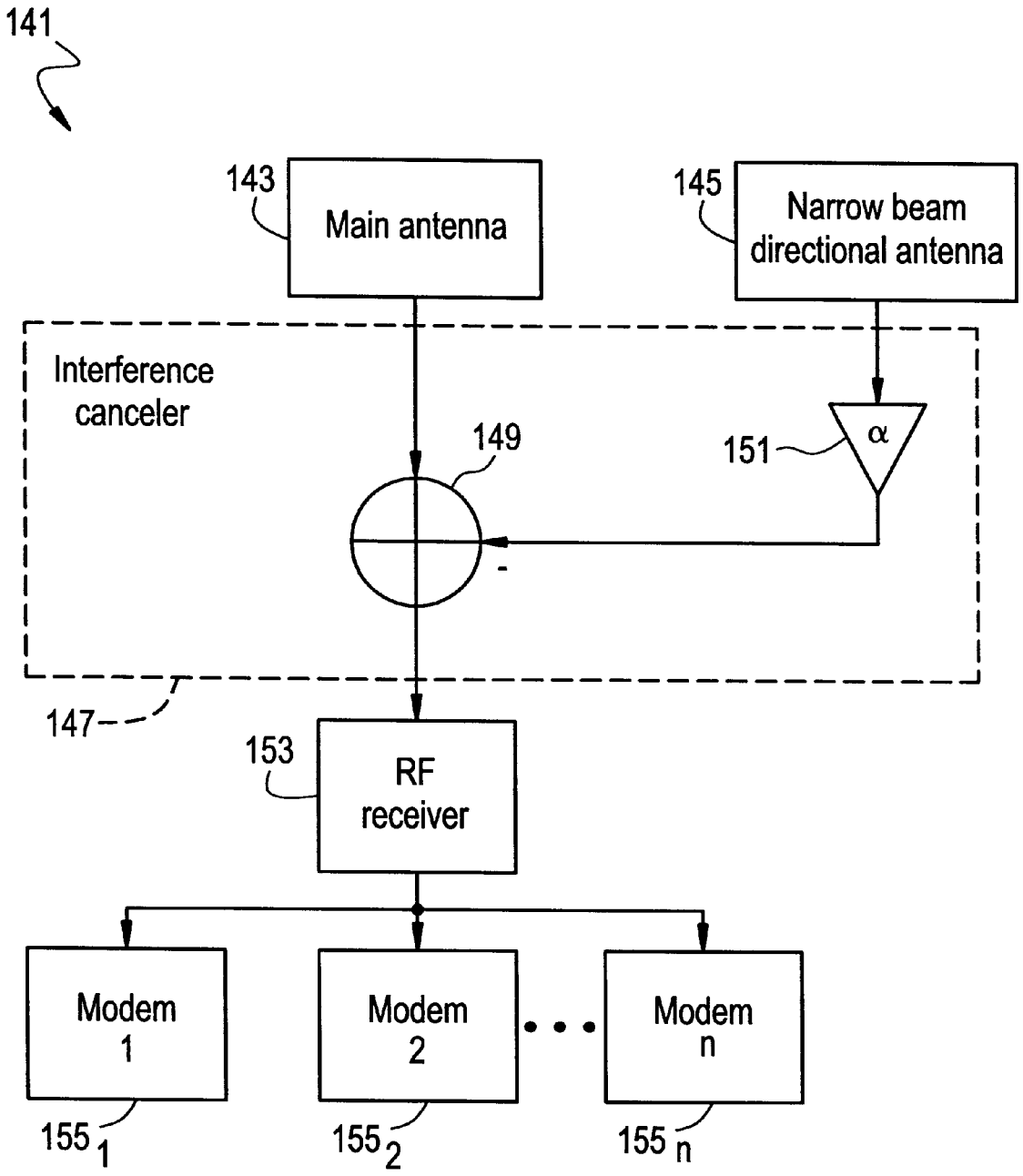
141
143
Main antenna
145
Narrow beam directional antenna
Interference canceler
149
151
α
-
147
153
RF receiver
Modem 1
Modem 2
Modem n
155 1
155 2
155 n

FIG. 11

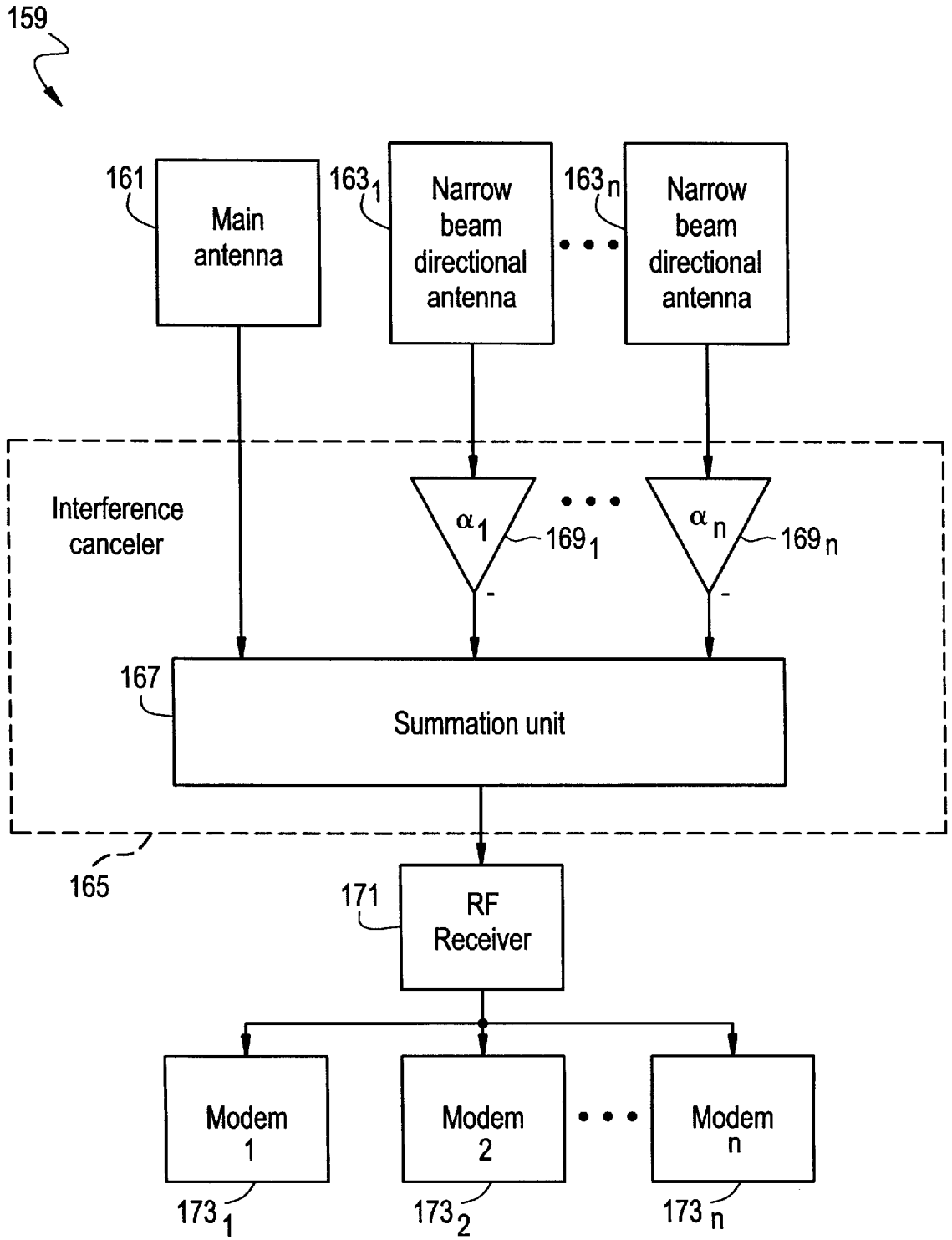
159
161
Main antenna
163 1
Narrow beam directional antenna
163 n
Narrow beam directional antenna
Interference canceler
α 1
169 1
α n
169 n
167
Summation unit
165
171
RF Receiver
Modem 1
Modem 2
Modem n
173 1
173 2
173 n

FIG. 12

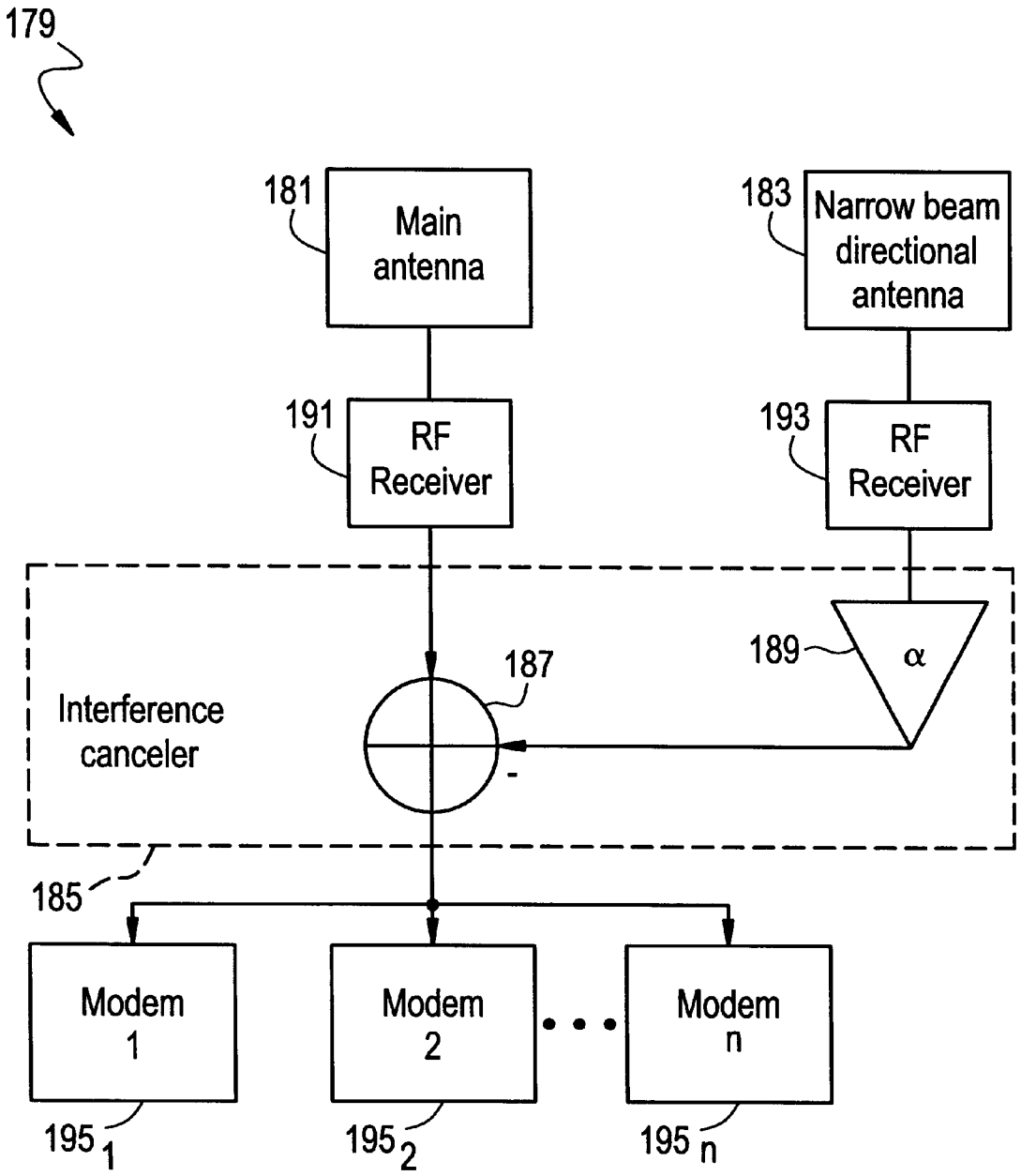
179
181
Main antenna
183
Narrow beam directional antenna
191
RF Receiver
193
RF Receiver
189
α
187
Interference canceler
-
185
Modem 1
Modem 2
Modem n
195 1
195 2
195 n

FIG. 13

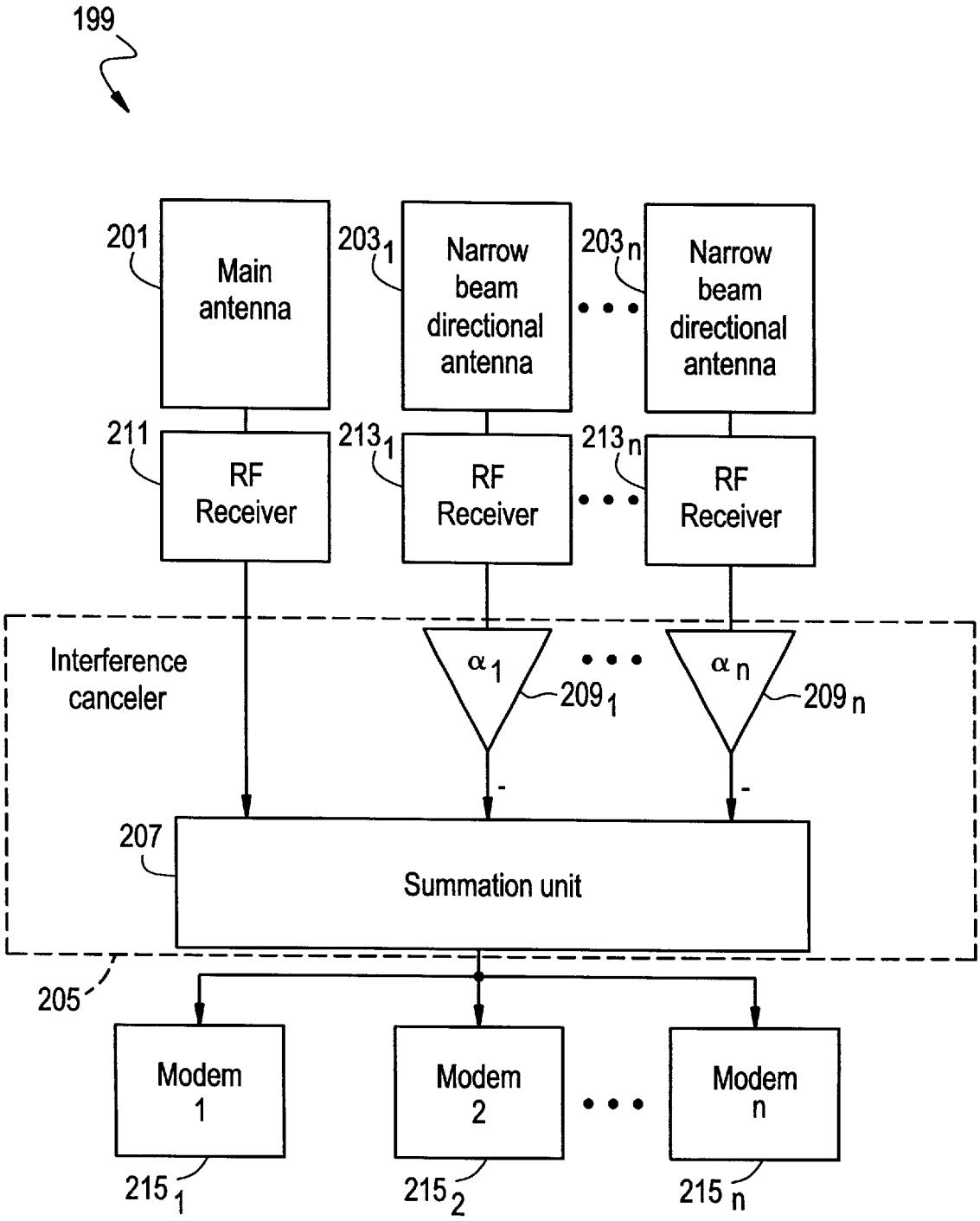
199
201
Main antenna
203 1
Narrow beam directional antenna
203 n
Narrow beam directional antenna
211
RF Receiver
213 1
RF Receiver
213 n
RF Receiver
Interference canceler
α 1
209 1
α n
209 n
207
Summation unit
205
Modem 1
Modem 2
Modem n
215 1
215 2
215 n

ADAPTIVE CANCELLATION OF FIXED INTERFERERS

BACKGROUND OF THE INVENTION

1. Field of the Invention

The present invention relates to wireless digital communication systems. More particularly, the present invention relates to an adaptive interference canceler included within telecommunication base stations and uses at least one auxiliary antenna in conjunction with a primary antenna for increasing the capacity of the telecommunication system by substantially reducing interference produced by one or more known interference sources proximate to the base station.

2. Description of the Prior Art

Over the last decade consumers have become accustomed to the convenience of wireless communication systems. This has resulted in a tremendous increase in the demand for wireless telephones, wireless data transmission and wireless access to the Internet. The amount of available RF spectrum for any particular system is often quite limited due to government regulation and spectrum allotments.

CDMA communication systems have shown promise in the effort to provide efficient utilization of the RF spectrum. At least one brand of CDMA systems, Broadband Code Division Multiple Access™ or B-CDMA™ communication systems available from InterDigital Communications Corporation, permit many communications to be transmitted over the same bandwidth, thereby increasing the capacity of the allotted RF spectrum. In B-CDMA™ communication systems, a data signal at the transmitter is mixed with a pseudorandom "spreading code" to spread the information signal across the entire transmission bandwidth or spectrum employed by the communication system. Afterwards, the spread spectrum signal is modulated with an RF carrier signal for transmission. A receiver receives the transmitted RF carrier signal and down converts the signal to a spread baseband signal. The spread data signal is despread by mixing the locally generated pseudorandom spreading code with the spread signal.

In order to detect the information embedded in a received signal, a receiver must use the same pseudorandom spreading code that was used to spread the signal. Signals which are not encoded with the pseudorandom code of the receiver appear as background noise to the receiver. However, signal frequencies within the transmission bandwidth contribute to the overall background noise making it difficult for receivers to properly detect and receive signals. A subscriber may increase the power of his transmitted signal to compensate, but overpowering interferes with the reception of other communication channels sharing the same communication bandwidth.

The allocated transmission bandwidths of many CDMA communication systems approach or share frequencies with other communication systems, such as microwave relaying or cellular communication systems. These systems may present interference signals which can greatly exceed the power of the CDMA communication signals in specific regions of the transmission bandwidth.

Applicants have recognized the need to decrease the amount of interference from identified manmade interferers in order to efficiently increase the allocated spectrum capacity of a CDMA communication system.

SUMMARY OF THE INVENTION

The present invention provides an improved base station which cancels the effects of known fixed interference sources to produce a signal substantially free from the interference sources.

In one embodiment, an antenna system in conjunction with a base station is deployed at a location with one or more known interference sources. The antenna system includes a main antenna for receiving signals from other communication stations and at least one directional antenna directed toward an interference source. The main and directional antennas are coupled to an adaptive canceler, which weights signals received by the directional antennas and sums the weighted signals to produce a cancellation signal. The adaptive canceler subtracts the cancellation signal from the signals received by the main antenna to provide an output signal substantially free from the interference generated by the one or more known interference sources. The adaptive canceler may use a plurality of feedback loops to implement a least mean square (LMS) algorithm to properly weight the directional antenna signals.

Accordingly, it is an object of the present invention to decrease the amount of interference produced from manmade interference sources that is processed as a received CDMA communication signal.

Other advantages may become apparent to those skilled in the art after reading the detailed description of the preferred embodiment.

BRIEF DESCRIPTION OF THE DRAWINGS

FIG. **1** is a communication network embodiment of the present invention.

FIG. **2** shows propagation of signals between a base station and a plurality of subscriber units.

FIG. **3**A is a diagram of a base station of the present invention.

FIG. **3**B is a diagram of the base station of the present invention with four coplanar feeds (n=4).

FIG. **4** is a diagram of a first embodiment of an RF adaptive canceler of the present invention.

FIG. **5** is a detailed diagram of a base station of the present invention.

FIG. **6** is a diagram of a vector correlator.

FIG. **7** is a diagram of a phase-locked loop (PLL).

FIG. **8**A is a diagram of a second embodiment of a base station of the present invention.

FIG. **8**B is a diagram of the second embodiment of the base station with four coplanar feeds (n=4) for both first and second auxiliary antennas.

FIG. **9** is a diagram of a second embodiment of an RF adaptive canceler of the present invention.

FIG. **10** is a diagram of a third embodiment of a base station of the present invention.

FIG. **11** is a diagram of a fourth embodiment of a base station of the present invention.

FIG. **12** is a diagram of a fifth embodiment of a base station of the present invention.

FIG. **13** is a diagram of a sixth embodiment of a base station of the present invention.

DESCRIPTION OF THE PREFERRED EMBODIMENTS

Presently preferred embodiments are described below with reference to the drawing figures wherein like numerals represent like elements throughout.

A communication network **21** embodying the present invention is shown in FIG. **1**. The communication network

21 generally comprises one or more base stations 23, each of which is in wireless communication with a plurality of subscriber units 25, which may be fixed or mobile. Each subscriber unit 25 communicates with either the closest base station 23 or the base station 23 which provides the strongest communication signal. The base stations 23 also communicate with a base station controller 27, which coordinates communications among base stations 23. The communication network 21 may also be connected to a public switched telephone network (PSTN) 29, wherein the base station controller 27 also coordinates communications between the base stations 23 and the PSTN 29. Preferably, each base station 23 communicates with the base station controller 27 over a wireless link, although a land line may also be provided. A land line is particularly applicable when a base station 23 is in close proximity to the base station controller 27.

The base station controller 27 performs several functions. Primarily, the base station controller 27 provides all of the operations, administrative and maintenance (OA&M) signaling associated with establishing and maintaining all of the wireless communications between the subscriber units 25, the base stations 23, and the base station controller 27. The base station controller 27 also provides an interface between the wireless communication system 21 and the PSTN 29. This interface includes multiplexing and demultiplexing of the communication signals that enter and leave the system 21 via the base station controller 27.

Referring to FIG. 2, the propagation of signals between a base station 23 and a plurality of subscriber units 25 is shown. A two-way communication path 31 comprises a forward signal 33 transmitted (TX) from the base station 23 to a subscriber 25 and a return signal received 35 (RX) by the base station 23 from the subscriber 25. The signal between the base station 23 and the subscriber 25 includes the transmission of a global pilot signal. The pilot signal is a RF modulated spreading code with no data modulation. The pilot signal is used for synchronizing the base station 23 with the subscriber 25. A communication channel is established upon synchronization.

Referring to FIG. 3A, a base station 23 of the present invention includes a main antenna 37 and an auxiliary antenna 39 which are coupled to a RF adaptive canceler 41. The output of the adaptive canceler 41 is coupled to a RF receiver 43, which is coupled to a plurality of modems 45_1–45_n. Each CDMA communication channel is spread with a unique spreading code. The plurality of modems 45_1–45_n enable simultaneous processing of multiple CDMA communications, each processing a communication associated with a different spreading code.

Signals which are not encoded with the proper pseudorandom code appear as background noise or interference to a particular communication. In addition, the level of noise may increase due to a known interferer 47. For example, a local radio station may be an interferer because it broadcasts a signal in the same transmission bandwidth used by the base station 23. To overcome the interference, the subscriber units 25 must increase their transmission power exacerbating the level of background noise since the increase in power by the subscribers 25 increases the level of noise thereby decreasing the number of subscribers 25 which can be accommodated by the base station 23.

In order to cancel the effects of the known interferer 47, the auxiliary antenna 39 is directed toward the source of interference 47. The auxiliary antenna 39 architecture is highly focused and directional such that the only large signal received by the auxiliary antenna 39 is the signal from the interferer 47 and not the signals from the subscriber units 25. The auxiliary antenna 39 has a plurality of coplanar feeds 49_1–49_n for receiving a plurality of replicas of the signal transmitted by the interferer 47. One skilled in the art should clearly recognize that the number of individual feeds used is based upon the specification of a given application. A preferred embodiment having four coplanar feeds (n=4) is shown in FIG. 3B. Referring back to FIG. 3A, each interference replica has a different phase corresponding to the coplanar feed 49_1–49_n position in free space. After the interference replicas are received through the coplanar feeds 49_1–49_n, the interference replicas are coupled to the RF adaptive canceler 41. The coplanar feeds 49_1–49_n located in the auxiliary antenna 39 are preferably spaced one-quarter to one-half wavelength of the carrier frequency apart.

Referring to FIG. 4, the RF adaptive canceler 41 removes the interference signals from the signal received by the main antenna 37 so that the overall background noise is greatly reduced. This is accomplished by providing the RF adaptive canceler 41 with circuitry for implementing a least mean square (LMS) algorithm or other adaptive algorithm to provide proper weights to each of the interference signals received by the coplanar feeds 49_1–49_n. The proper weights for each interference replica are obtained when the adaptive canceler 41 reaches steady state. These weighted interference replicas are summed to provide a combined interference signal, which is subtracted from the signal from the main antenna 37 thereby deriving a signal substantially free from the interference source 47.

The RF adaptive canceler 41 includes weighting mixers 51_1–51_n, integrating mixers 53_1–53_n, operational amplifiers 55_1–55_n, integrators 57_1–57_n, a summation unit 59, and summer 61. Weighting mixers 51_1–51_n and integrating mixers 53_1–53_n receive the interference replicas from feeds 49_1–49_n respectively. Each corresponding weighting mixer 51_1–51_n, operational amplifiers 55_1–55_n, and integrators 57_1–57_n, are operatively coupled to produce respective weights W_1–W_n which are mixed with the respective interference replica via mixers 51_1–51_n. The weights W_1–W_n are initially zero so that the interference replicas initially received pass to the summation unit 58 without adjustment. The output of the summation unit 58 is a combined interference signal and is subtracted from the total signal received from the main antenna 37 using the summer 61.

The adaptive canceler 41 outputs the received signal absent the known interference 47 to both the RF receiver 43 and the mixers 53_1–53_n to create multiple feedback loops for implementing feed 49_1–49_n weight W_1–W_n adjustments. The signals output from the integrating mixers 53_1–53_n are fed to amplifiers 55_1–55_n and integrators 57_1–57_n to adjust the weights W_1–W_n which are input to weighting mixers 51_1–51_n. The amplified and integrated signals are mixed with the interference replicas. This completes the LMS circuit. Once the signal input levels to the integrators 57_1–57_n are zero, the adaptive canceler 41 is in steady state and the weights W_1–W_n remain constant until a perturbation in the interference is experienced.

The outputs of the integrators 57_1–57_n continuously provide appropriate weights W_1–W_n via the feedback loops to the summation unit 59. The combined interference signal output from summation unit 59 is subtracted from the signal received from main antenna 37 by the summer 61, so that the signals received from the main antenna 37 are output 63 from the RF adaptive canceler 41 substantially free from the interference produced by the fixed interferer 47.

Referring back to FIG. 3A, the adaptive canceler 41 is coupled to the RF receiver 43 which demodulates the RF

signal removing the carrier frequency and outputting a baseband signal to the modems 45_1–45_n. The modems 45_1–45_n search through possible phases of the resulting baseband signal until they detect the correct phase. Phase-distorted copies of the communication signal or "multiples," are compensated for by overlaying them on the correct phase which results in increased gain. This function is performed by an adaptive matched filter (AMF) **65** which operates in conjunction with phase correcting coefficients determined by a vector correlator or rake receiver **67** with a carrier recovery phase-locked loop (PLL) **69** (FIG. **5**).

More specifically, each of the modems 45_1–45_n includes an analog-to-digital (A/D) converter **71** which quantizes the baseband signal into a digital signal with the assistance of a tracker **73**. The tracker **73** directs the A/D converter **71** to sample the strongest analog representation of the data being transmitted to the base station **23** to provide an accurate digital signal. The digital signal may include a plurality of data signals and a pilot signal.

As is well known in this art, CDMA communication units use a pilot signal to provide synchronization of a locally generated pseudorandom code with the pseudorandom code transmitted by the transmitting station, and to provide a transmission power reference during initial power ramp-up. Typically, a base station **23** transmits the pilot signal to the remote units **25** to provide synchronization of locally generated pseudorandom codes with the transmitted pseudorandom code. The pilot signal is a pseudorandom sequence of complex numbers having a magnitude (real component) of one and phase (imaginary component) of zero.

The digital pilot signal will suffer from the same distortion as the digital data signal, since they are both transmitted within the RF signal. Accordingly, the vector correlator **67**, receives the pilot signal and determines in conjunction with a phase-locked loop (PLL) **69** filter coefficients based on the distortion of the pilot signal. The derived coefficients represent the distortion or errors of the data signal. The data signal/CDMA communication signal, which is directed to the AMF **65**, is processed by the AMF **65** according to the filter coefficients generated by the vector correlator **67** in combination with the PLL **69**.

As disclosed in U.S. patent application Ser. No. 08/266,769 and U.S. patent application Ser. No. 08/871,109, which are incorporated by reference as if fully set forth herein, vector correlators in conjunction with phase-locked loop circuitry have been utilized to produce filter coefficients to correct for multipath distortion. In the present invention, the vector correlator **67** and PLL **69** generate filter coefficients associated with multipath distortion.

Referring to FIG. **6**, the vector correlator **67** provides an estimate of the complex channel impulse response, having real and imaginary components, of the bandwidth over which the CDMA communication signal is transmitted. The vector correlator **67** has a plurality of independent elements or "fingers" 75_1–75_n, preferably eleven, wherein the pseudorandom pilot signal input to each finger 75_1–75_n is delayed τ_1–τ_n by one chip to define a processing "window." A typical processing window would include eleven chips. The pilot signal is input to each element 75_1–75_n.

Each element 75_1–75_n performs an open-loop estimation of the sampled impulse response of the RF channel. Thus, the vector correlator **67** produces noisy estimates of the sampled impulse response at evenly spaced intervals. Accordingly, the signal analysis performed by the vector correlator **67** determines phase distortions occurring at different points within the processing window, for example, distortion attributable to multipath interference.

In operation, each element 75_1–75_n of the vector correlator **67** receives a locally generated pseudorandom pilot signal. The signal supplied to the vector correlator **67** from the A/D converter **71** is input to each element. Mixers 77_1–77_n mix the locally generated pilot pseudorandom code with the received signal to despread the pilot signal. The delay units τ_1–τ_n impart a one chip delay on the despread pilot signal. Each element 75_1–75_n receives a carrier offset phase correction signal from the PLL **69**, which is mixed with the despread pilot signal in each element 75_1–75_n by mixers 79_1–79_n to provide sample impulse response estimates. The vector correlator **67** further includes a plurality of low-pass filters 81_1–81_n which are coupled to each mixer 79_1–79_n to smooth each corresponding sample impulse response estimate. The complex conjugates of each smoothed sampled impulse response estimate are used as the filter coefficients, or weights, for the AMF **65**. In addition, the complex conjugate of each smoothed sampled response is mixed with the despread pilot signal by mixers 83_1–83_n. The summation unit **85** receives the outputs of mixers 83_1–83_n and outputs the combined despread pilot signal which is substantially free from multipath distortion.

The carrier recovery PLL **69** processes the output of the vector correlator **67** to estimate and correct the phase error or difference due to RF carrier signal offset. The offset may be due to internal component mismatches and/or RF distortion. Component mismatches between the subscriber oscillator and the receiver oscillator may cause slightly different oscillator outputs. These component mismatches can be further exacerbated by local and environmental conditions, such as the heating and cooling of electronic components which may affect the temperature coefficient of the various components. With respect to RF channel distortion, Doppler effects caused by the motion of the receiving stations relative to the transmitter station or a mismatched reflector may cause the RF carrier to become distorted during transmission. This may result in a RF carrier offset. The PLL **69** architecture is preferably executed in a programmable digital signal processor (DSP).

Referring to FIG. **7**, the continuously adjusted-bandwidth PLL **69** comprises a mixer **87**, a normalizing unit **89**, an arctangent analyzer **91**, a phase-locked loop filter **93**, a voltage controlled oscillator (VCO) **245** and a bandwidth control section **97**. The mixer **87** receives the output from the vector correlator **67** which is the despread pilot signal processed to correct for channel distortion due to multipath effects. The despread pilot signal is mixed with a correction signal from the VCO **95** to produce a complex error signal which is coupled to the normalizing unit **89**. The normalized signal is coupled to the arctangent analyzer **91**. The arctangent analyzer **91** outputs a phase angle derived from the complex (number) error signal. The bandwidth control section **97** continuously monitors the quantized phase error signal and generates a control signal to control the bandwidth of the phase locked-loop filter **93**. The signal output for the phase-locked loop filter **93** is transmitted to the VCO **95**. The VCO **95** outputs a feedback signal to mixer **87**. The output from phase-locked loop filter **93** indicates carrier-offset phase error. The process is repeated until a complex error signal output from the mixer **87** is at a minimum. Optimum performance of the modem **45**, will not occur until the vector correlator **67** and PLL **69** have reached a mutually satisfactory equilibrium point.

The vector correlator **67** outputs weighting coefficients to the AMF **65**. The AMF **65** processes the communication signal to compensate for channel distortion due to multipath effects. This compensation increases the gain of the signal

by, in effect, overlaying delayed replicas of the signal. The AMF **65** outputs the filtered signal to a plurality of channel despreaders **99**. The despread channel signals are coupled to Viterbi decoders **101** for decoding the forward error correction (FEC) encoded data signals.

The channel despreaders **99** couple to the Viterbi decoders **101** which function as described in copending application Ser. No. 08/871,008, which is incorporated by reference as if fully set forth of the convolutional encoder (not shown) of a subscriber unit **25**. The Viterbi decoders **101** decodes the FEC signal rendering the original data signal. The resulting data signal can be output either digitally or converted to analog with a digital to analog converter (DAC) **103**. The Viterbi decoders **101** also perform a bit error rate (BER) **106** calculation which is coupled to an automatic power control (APC) unit **105**.

The APC unit **105** determines whether the transmission signal strength of the received data signal should be increased or decreased to maintain an acceptable bit error rate based upon the estimate of the interference provided by the channel despreaders **99**. The BER **106** output from the Viterbi decoder **101** is coupled to the APC unit **105** to adjust transmission power. The APC unit **105** calculates a signal-to-interference ratio (SIR_t) threshold for the system to maintain. An adjustable input representing a desired quality of service is input into the APC unit **105** as a combination of desired bit error (BER_0) **107** and signal to interference ratio (SIR_0) **108**. The choice of quality depends whether the system is providing simple voice communication or a more sophisticated transmission such as facsimile. The quality determination is performed during decoding. The relationship

$$SIR_t=SIR_0+k(BER-BER_0) \quad \text{Eqn. 1}$$

determines SIR_t **109** which is the sought interference threshold. A weight or gain k adjusts the deviation from the desired BER_0 and derives the SIR_t from the base SIR_0 which is used to adjust transmission power. This instruction is conveyed within the reverse signal to a subscriber.

A base station **111** in accordance with a second embodiment of the present invention will be explained with reference to FIG. **8**A. The base station **111** includes a main antenna **113** and first **115** and second **117** auxiliary antennas which are coupled to an RF adaptive canceler **119**. The first **115** and second **117** auxiliary antennas are directed at separate known interferers **121**, **123**. The adaptive canceler **119** is coupled to an RF receiver **125**, which is connected to a plurality of modems **127** as in the first embodiment. The RF adaptive canceler **119** cancels the effects of the two interferers. If additional known interferers are present in the operating region of main antenna **113**, additional auxiliary antennas facing the additional interferers can be added to cancel the effects of the additional interferers.

The first auxiliary antenna **115** has a plurality of coplanar feeds $\mathbf{129}_1$–$\mathbf{129}_n$ for receiving replicas of the interference signal from the interferer **121**. An embodiment having four coplanar feeds (n=4) for both first and second auxiliary antennas is shown in FIG. **8**B. Referring back to FIG. **8**A, the coplanar feeds $\mathbf{129}_1$–$\mathbf{129}_n$ are preferably one quarter to one half wavelength apart. The second auxiliary antenna **117** also has a plurality of coplanar feeds $\mathbf{131}_1$–$\mathbf{131}_n$ for receiving the replicas of the interference signal from the second interferer **123**. The coplanar feeds $\mathbf{131}_1$–$\mathbf{131}_n$ are preferably a one quarter to one half wavelength apart. In addition, both first **115** and second **117** auxiliary antennas are focused such that substantially only the signals from the first **121** and second **123** interferers will be received by the auxiliary antennas respectively, and the signals from a subscriber unit **25** will not be received by the auxiliary antennas. After all the interference replicas are received through the coplanar feeds $\mathbf{129}_1$–$\mathbf{129}_n$ and $\mathbf{131}_1$–$\mathbf{131}_n$, the replicas of the first **115** and second **117** auxiliary antennas are passed to the RF adaptive canceler **119**. Each replica has a different phase corresponding to the position of each coplanar feed.

Referring to FIG. **9**, an examination reveals that this embodiment **111** is the same as the adaptive canceler **41** shown in FIG. **4** with the inputs from auxiliary antenna **30** now comprising interference samples from the first auxiliary antenna **115** feeds $\mathbf{129}_1$–$\mathbf{129}_n$ and second auxiliary antenna **117** feeds $\mathbf{131}_1$–$\mathbf{131}_n$. The adaptive canceler of the present invention can input a plurality of directional interference sources comprised of a plurality of multiphase samples and perform a uniform LMS algorithm to remove the interference samples.

Referring to FIG. **10**, a third alternative embodiment of a base station **141** made in accordance with the present invention is shown. The base station **141** includes a main antenna **143** and a narrow beam directional antenna **145** (auxiliary antenna) coupled to an interference canceler **147**. The interference canceler **147** includes a summer **149** and an amplifier **151**. The interference cancellation method involves directing the narrow beam directional antenna **145** towards a fixed interferer (not shown) as in the previous embodiments, weighting the signal received by the narrow beam directional antenna **145** by a factor α and subtracting it from the signal received from the main antenna **143** using a summer **149**. The resulting signal is used for demodulating the transmitted data. The choice of the weighting factor α determines how much reduction in the fixed interference is obtained.

The total power received by the main antenna **110** in the absence of any interference cancellation scheme is:

$$P_0=KP+P_i \quad \text{Eqn. 2}$$

where K equals the total number of users, P equals the power received at the base station from a user who is not in the narrow beam of the secondary antenna, and P_i is the power received from a fixed interferer.

With both the main **143** and narrow beam **145** antennas, the total power received by the main antenna **110** is

$$P_p=(K-M)P+MP^*+P_i \quad \text{Eqn. 3}$$

where M equals the number of users within the narrow beam of the narrow beam antenna **145**, and P* is the power received from a user who is in the narrow beam of a narrow beam antenna **145**. The total power received by the narrow beam antenna **145** is

$$P_s=MP^*+P_i. \quad \text{Eqn. 4}$$

The signal that is to be used in demodulation has the total power, which is

$$P_t=P_p-\alpha P_s=(K-M)P+MP^*+P_i-\alpha MP^*-\alpha P_i, \quad \text{Eqn. 5}$$

or equivalently

$$P_t=(K-M)P+M(1-\alpha)P^*+(1-\alpha)P_i. \quad \text{Eqn. 6}$$

As a result of the automatic power control, all users+ have the same signal strength contributing to the total power P_t.

This implies

$$P=(131\ \alpha)P^*, \quad \text{Eqn. 7}$$

$$P^*=P/1-\alpha. \quad \text{Eqn. 8}$$

Therefore, P_t can now be written as

$$P_t=KP+(1-\alpha)P_i.\text{tm} \quad \text{Eqn. 9}$$

By comparing equation 9 to equation 3, the contribution of the fixed interferer when comparing signals received by the main antenna only to that received by the combined main-antenna auxiliary-antenna system has decreased by a factor of $(1-\alpha)$. For example, if $\alpha=0.9$, the interference has been reduced by 10 dB. Thus, there is an effective spatial attenuation in the direction of the narrow beam antenna. This attenuation will affect not only the interferer, but users that are in the narrow beam path as well. To compensate, users within the path of the narrow beam directional antenna **145** must have antenna gains that are higher by a factor of $1/(1-\alpha)$. This can be achieved by giving these particular users higher gain antennas. This is practical because there will be only a few users within the narrow beam of the narrow beam directional antenna **145**.

The weighted interference signal from amplifier **151** is subtracted from the signals received by way of main antenna **143** by summer **149** so that the signals from main antenna **143** are passed from the interference canceler **147** substantially free from the known interferers to a RF receiver **153** which demodulates and removes the carrier frequency. The baseband signal output by the RF receiver **153** is processed by the modems $\mathbf{155}_1$–$\mathbf{155}_n$ as discussed in the first embodiments.

Referring to FIG. **11**, a fourth alternative embodiment of a base station **159** is shown. The base station **159** includes a main antenna **161** and a plurality of narrow beam directional antennas $\mathbf{163}_1$–$\mathbf{163}_n$ (auxiliary antennas) coupled to an interference canceler **165**. The interference canceler **165** includes a summation unit **167** and a plurality of weighting amplifiers $\mathbf{169}_1$–$\mathbf{169}_n$ coupled to each narrow beam directional antenna $\mathbf{163}_1$–$\mathbf{163}_n$. The interference cancellation method involves directing each narrow beam directional antenna $\mathbf{163}_1$–$\mathbf{163}_n$ toward a corresponding fixed interferer as in the second alternative embodiment, weighting the signals received by the narrow beam directional antennas $\mathbf{163}_1$–$\mathbf{163}_n$ by corresponding weighting factors α_1–α_n and subtracting the weighted signals from the signal received by way of the main antenna **161** using summation unit **167**. The resulting signal is then used for demodulation of user data. The choice of the weighting factors α_1–α_n determines the reduction in the fixed interference as explained in the third embodiment.

The weighted interference signals from the amplifiers $\mathbf{169}_1$–$\mathbf{169}_n$ are subtracted from the signals received by the main antenna **161** by summation unit **167** so that the signals from main antenna **161** are passed from the interference canceler **165** substantially free from the known interferers to a RF receiver **171** which demodulates and removes the carrier frequency. The baseband signal output by the RF receiver **171** is processed by the modems $\mathbf{173}_1$–$\mathbf{173}_n$ as discussed in the first embodiment.

Referring to FIGS. **12** and **13**, fifth **179** and sixth **199** alternative embodiments are shown similar to the architectures in FIGS. **10** and **11** differing in that the RF receivers are coupled directly to the antennas, demodulating the RF signals to baseband first and then performing the substraction of the interferers received from the narrow beam directional antennas. As one skilled in this art would recognize, the processing of the received signal and individually received interferers is at a frequency bandwidth much less than the transmission frequency bandwidth. Both the interference cancelers employed in the fifth **179** and sixth **199** alternative embodiments functions identically to those described in the third and fourth embodiments shown in FIGS. **10** and **11**.

The alternative embodiments shown in FIGS. **10–13** require synchronization of the received signals before subtraction can be made. This means that the cable lengths and other passive delays in the receive path of the main antenna and the auxiliary antenna(s) must be matched. The main antenna and auxiliary antenna(s) must be placed relatively close to each other to make sure that the receive signal from the antennas are not subject to different channel responses.

Although the invention has been described in part by making detailed reference to certain specific embodiments, such detail is intended to be instructive rather than restrictive. It will be appreciated by those skilled in the art that many variations may be made in the structure and mode of operation without departing from the spirit and scope of the invention as disclosed in the teachings herein.

What is claimed is:

1. An interference cancellation system for use in conjunction with a communication station having a main antenna for receiving signals from other communication stations where at least one interference source is known comprising:

a first directional antenna, having four (4) coplanar feeds, mounted proximate to said main antenna, wherein said directional antenna is directed toward a first known interference source, with said coplanar feeds being located one quarter to one half wavelength apart from each other; and

an adaptive canceler coupled to said coplanar feeds and to said main antenna for producing an output signal substantially free from interference generated by the first known interference source, wherein said adaptive canceler includes:

an output for coupling to an RF receiver of the communication station,

a cancellation unit for producing a cancellation signal by weighting the signals received by said coplanar feeds and summing said weighted signals using a least mean square (LMS) algorithm; and

a summer for summing said cancellation signal with signals received from said main antenna to produce said output signal.

2. An interference cancellation system for use in conjunction with a communication station having a main antenna for receiving signals from other communication stations wherein n interference sources are known, where n is an integer greater than 1, comprising:

first through n^{th} directional antennas, each having four (4) coplanar feeds, mounted proximate to said main antenna, wherein said directional antennas are each directed toward a respective first through n^{th} known interference source, with said coplanar feeds being located one quarter to one half wavelength apart from each other; and

an adaptive canceler coupled to said coplanar feeds and to said main antenna for producing an output signal substantially free from interference generated by the first through n^{th} known interference sources, wherein said adaptive canceler includes:

an output for coupling to an RF receiver of the communication station,

a cancellation unit for producing a cancellation signal by weighting the signals received by said coplanar feeds and summing said weighted signals using a least mean square (LMS) algorithm; and

a summer for summing said cancellation signal with signals received from said main antenna to produce said output signal.

3. A communication system including an interference cancellation system for use in conjunction with a communication station having a main antenna for receiving signals from other communication stations where at least one interference source is known comprising:

a first directional antenna, having four (4) coplanar feeds, mounted proximate to said main antenna, wherein said directional antenna is directed toward a first known interference source, with said coplanar feeds being located one quarter to one half wavelength apart from each other; and

an adaptive canceler coupled to said coplanar feeds and to said main antenna for producing an output signal substantially free from interference generated by the first known interference source, wherein said adaptive canceler includes:

an output for coupling to an RF receiver of the communication station,

a cancellation unit for producing a cancellation signal by weighting the signals received by said coplanar feeds and summing said weighted signals using a least mean square (LMS) algorithm; and

a summer for summing said cancellation signal with signals received from said main antenna to produce said output signal.

4. A communication system including an interference cancellation system for use in conjunction with a communication station having a main antenna for receiving signals from other communication stations wherein n interference sources are known, where n is an integer greater than 1, comprising:

first through n^{th} directional antennas, each having four (4) coplanar feeds, mounted proximate to said main antenna, wherein said directional antennas are each directed toward a respective first through n^{th} known interference source, with said coplanar feeds being located one quarter to one half wavelength apart from each other; and

an adaptive canceler coupled to said coplanar feeds and to said main antenna for producing an output signal substantially free from interference generated by the first through n^{th} known interference sources, wherein said adaptive canceler includes:

an output for coupling to an RF receiver of the communication station,

a canceller for producing a cancellation signal by weighting the signals received by said coplanar feeds and summing said weighted signals using a least mean square (LMS) algorithm; and

a summer for summing said cancellation signal with signals received from said main antenna.

* * * * *

UNITED STATES PATENT AND TRADEMARK OFFICE

CERTIFICATE OF CORRECTION

PATENT NO. : 6,289,004 B1
DATED : September 11, 2001
INVENTOR(S) : Mesecher et al.

It is certified that error appears in the above-identified patent and that said Letters Patent is hereby corrected as shown below:

Column 9,
Equation 7, delete " $P = (131\alpha)P^*$, " and insert therefor -- $P = (1-\alpha)\ P^*$ --
Line 7, delete " $P_t = KP + (1-\alpha)P_i tm\ Eqn.\ 9$ ", and insert therefor
-- $P_t = KP + (1-\alpha)P_i$ Eqn. 9 --

Signed and Sealed this

Nineteenth Day of March, 2002

Attest:

Attesting Officer

JAMES E. ROGAN
Director of the United States Patent and Trademark Office

EXHIBIT H

US006545990B1

(12) **United States Patent**
Amalfitano et al.

(10) **Patent No.: US 6,545,990 B1**
(45) **Date of Patent: Apr. 8, 2003**

(54) **METHOD AND APPARATUS FOR A SPECTRALLY COMPLIANT CELLULAR COMMUNICATION SYSTEM**

(75) Inventors: **Carlo Amalfitano**, Melbourne Beach, FL (US); **James A. Proctor, Jr.**, Indialantic, FL (US)

(73) Assignee: **Tantivy Communications, Inc.**, Melbourne, FL (US)

(*) Notice: Subject to any disclaimer, the term of this patent is extended or adjusted under 35 U.S.C. 154(b) by 0 days.

(21) Appl. No.: **09/467,353**

(22) Filed: **Dec. 20, 1999**

(51) **Int. Cl.**[7] **H04B 7/216**
(52) **U.S. Cl.** **370/335**; 370/342; 455/450
(58) **Field of Search** 370/335, 342, 370/329, 341, 441; 455/450

(56) **References Cited**

U.S. PATENT DOCUMENTS

5,319,634 A		6/1994	Bartholomew et al.	370/18
5,956,345 A	*	9/1999	Allpress et al.	370/480
6,044,073 A	*	3/2000	Seshadri et al.	370/342
6,335,922 B1	*	1/2002	Tiedemann, Jr. et al.	370/335

FOREIGN PATENT DOCUMENTS

EP 0 701 337 A2 3/1996

OTHER PUBLICATIONS

Lim, et al., "Implementation Issues on Wireless Data Services in CDMA Cellular and PCS Networks," Gateway to the Twenty First Century. International Conference on Universal Personal Communications. 1996 5th IEEE International Conference on Universal Personal Communications Record (Cat. No. 96th8185), *Proceedings of ICUPC—5th International Confer.*, 2:582–585, XP00217205 1996, New York, NY, USA, IEEE, USA.

Azad, et al., "Multirate Spread Spectrum Direct Sequence CDMA Techniques," IEE Colloquium on Spread Communications Systems, GB, IEE, London, XP000570787, pp. 4–1–4–05, Apr. 15, 1994.

Jeong, et al., "Rate–Controlled Data Transmission for IS–95 CDMA Networks," IEEE Vehicular Technology Conference, US, New York, IEEE, vol. CONF. 47, XP000738626, pp. 1567–15714 May 1997.

* cited by examiner

Primary Examiner—Edward F. Urban
Assistant Examiner—Erika A. Gary
(74) *Attorney, Agent, or Firm*—Hamilton, Brook, Smith & Reynolds, P.C.

(57) **ABSTRACT**

A system for wireless data transmission that uses a channel bandwidth, channel separation, and radio frequency power spectrum which is compatible with existing deployments of wireless voice services. The transmitted waveforms are thus compatible with existing cellular networks. However, the time domain digital coding, modulation, and power control schemes are optimized for data transmission. Existing cellular network sites can thus be used to provide a high speed service optimized for wireless data traffic without the need for new radio frequency planning, and without interfering with existing voice service deployments.

12 Claims, 6 Drawing Sheets

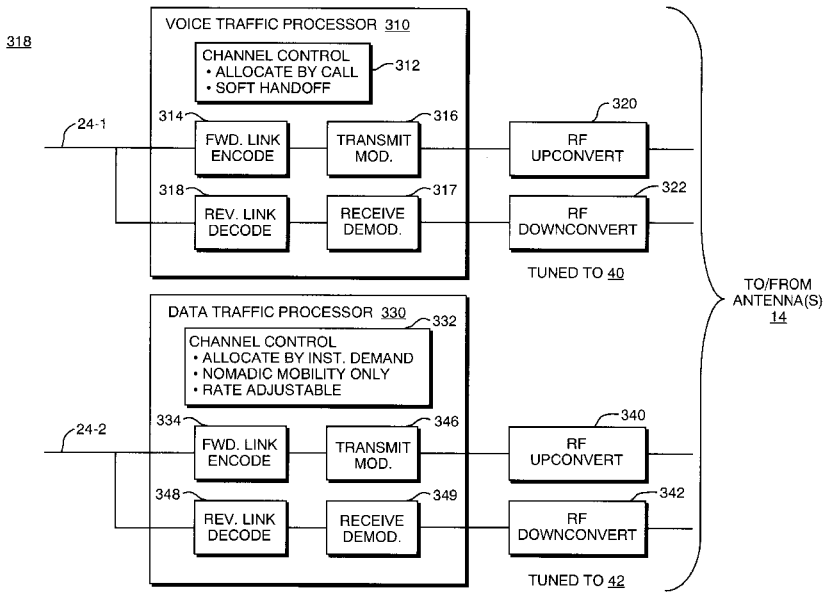

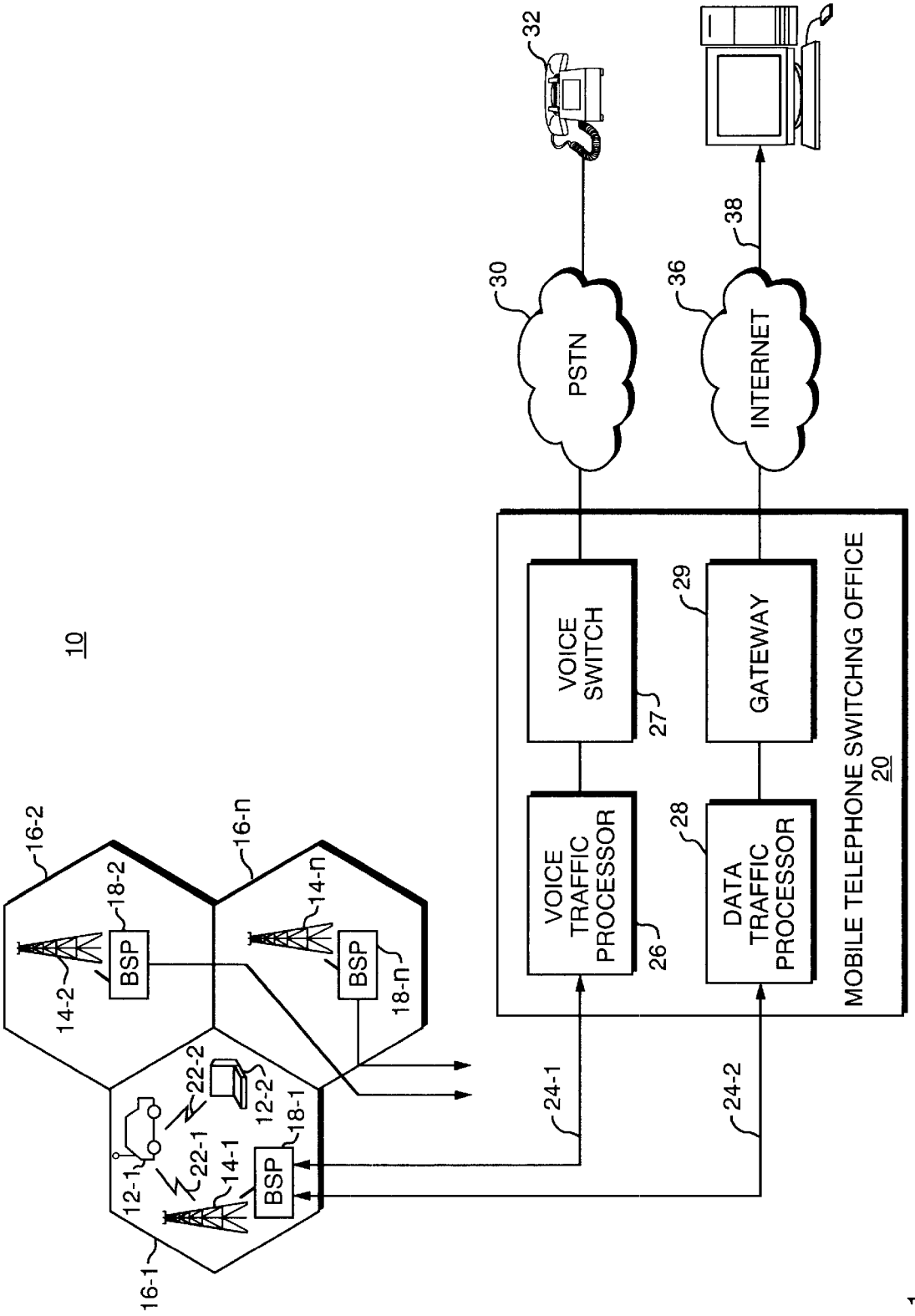
10
32
30
PSTN
36
INTERNET
38
VOICE SWITCH
27
GATEWAY
29
VOICE TRAFFIC PROCESSOR
26
DATA TRAFFIC PROCESSOR
28
MOBILE TELEPHONE SWITCHNG OFFICE
20
24-1
24-2
16-1
16-2
16-n
18-1
18-2
18-n
BSP
12-1
12-2
14-1
14-2
14-n
22-1
22-2

FIG. 1

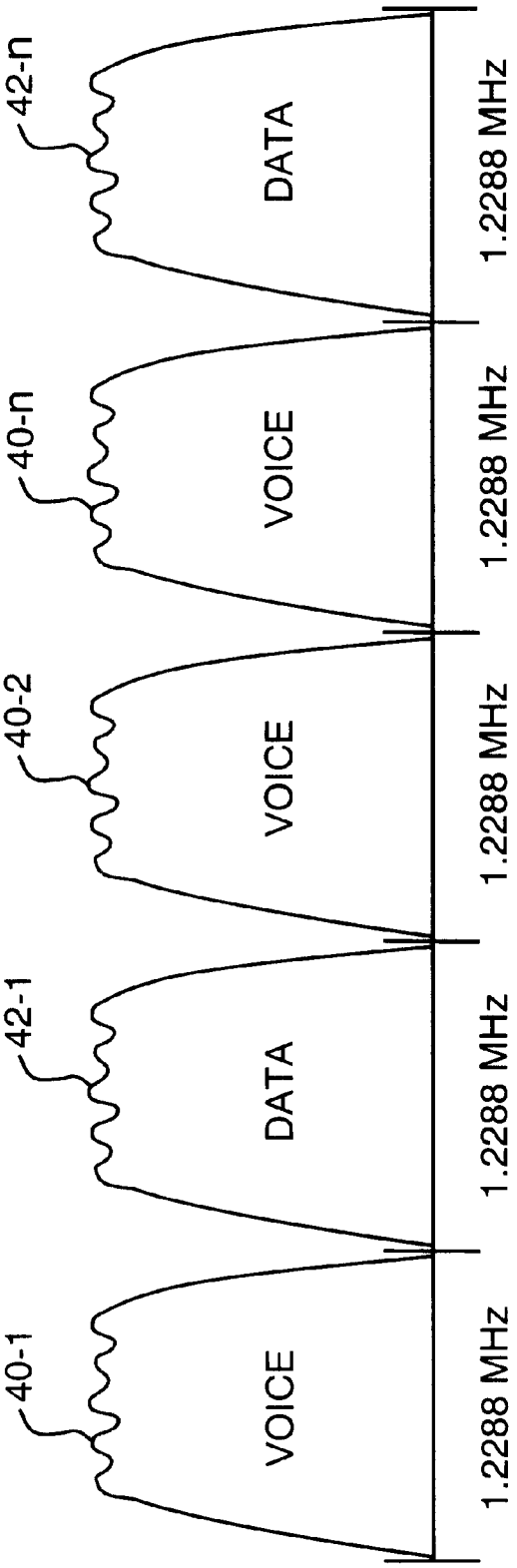
42-n
DATA
1.2288 MHz
40-n
VOICE
1.2288 MHz
40-2
VOICE
1.2288 MHz
42-1
DATA
1.2288 MHz
40-1
VOICE
1.2288 MHz

FIG. 2

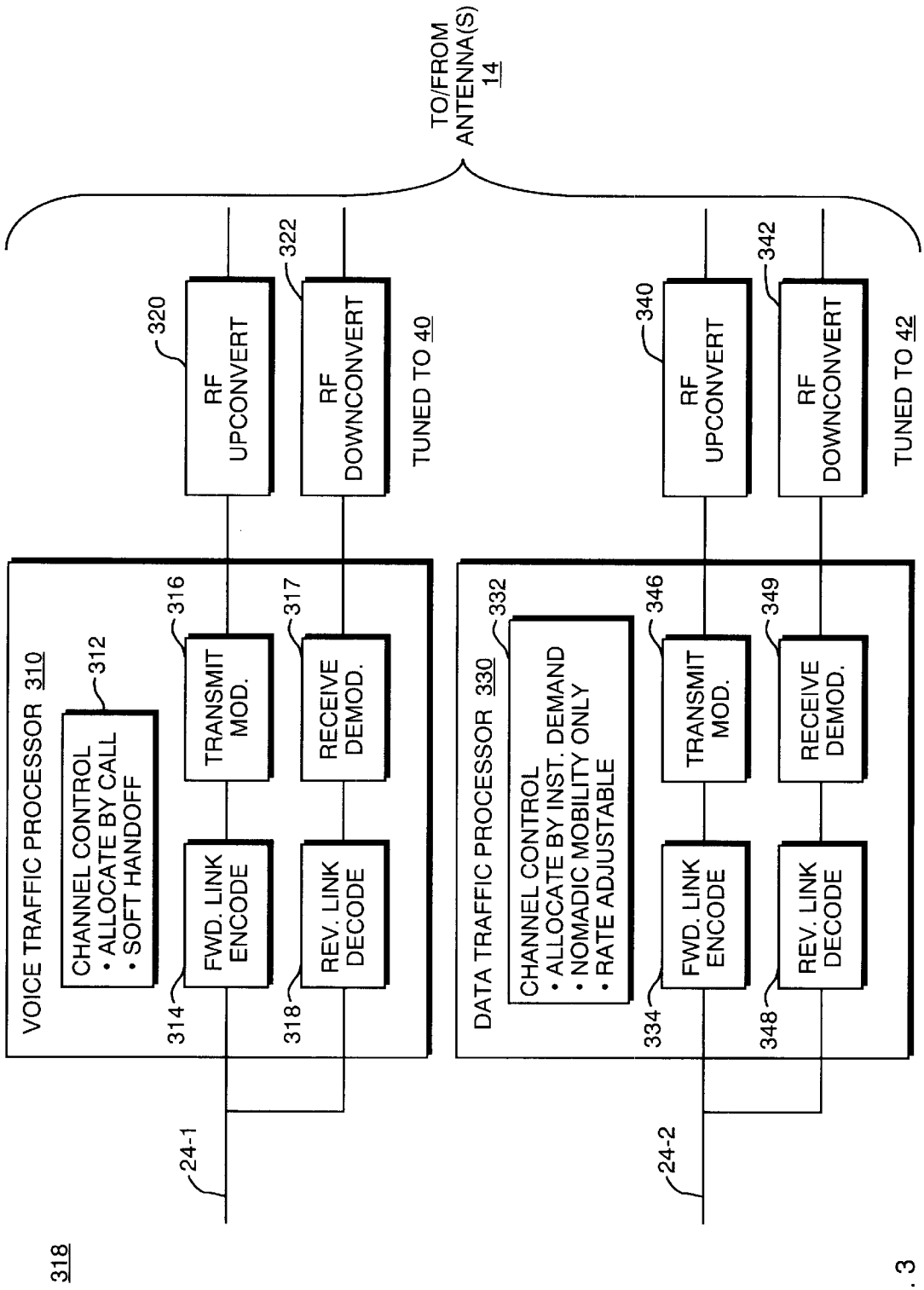
TO/FROM ANTENNA(S) 14
320
RF UPCONVERT
322
RF DOWNCONVERT
TUNED TO 40
340
RF UPCONVERT
342
RF DOWNCONVERT
TUNED TO 42
VOICE TRAFFIC PROCESSOR 310
312
CHANNEL CONTROL
• ALLOCATE BY CALL
• SOFT HANDOFF
316
TRANSMIT MOD.
317
RECEIVE DEMOD.
314
FWD. LINK ENCODE
318
REV. LINK DECODE
DATA TRAFFIC PROCESSOR 330
332
CHANNEL CONTROL
• ALLOCATE BY INST. DEMAND
• NOMADIC MOBILITY ONLY
• RATE ADJUSTABLE
346
TRANSMIT MOD.
349
RECEIVE DEMOD.
334
FWD. LINK ENCODE
348
REV. LINK DECODE
24-1
24-2
318

FIG. 3

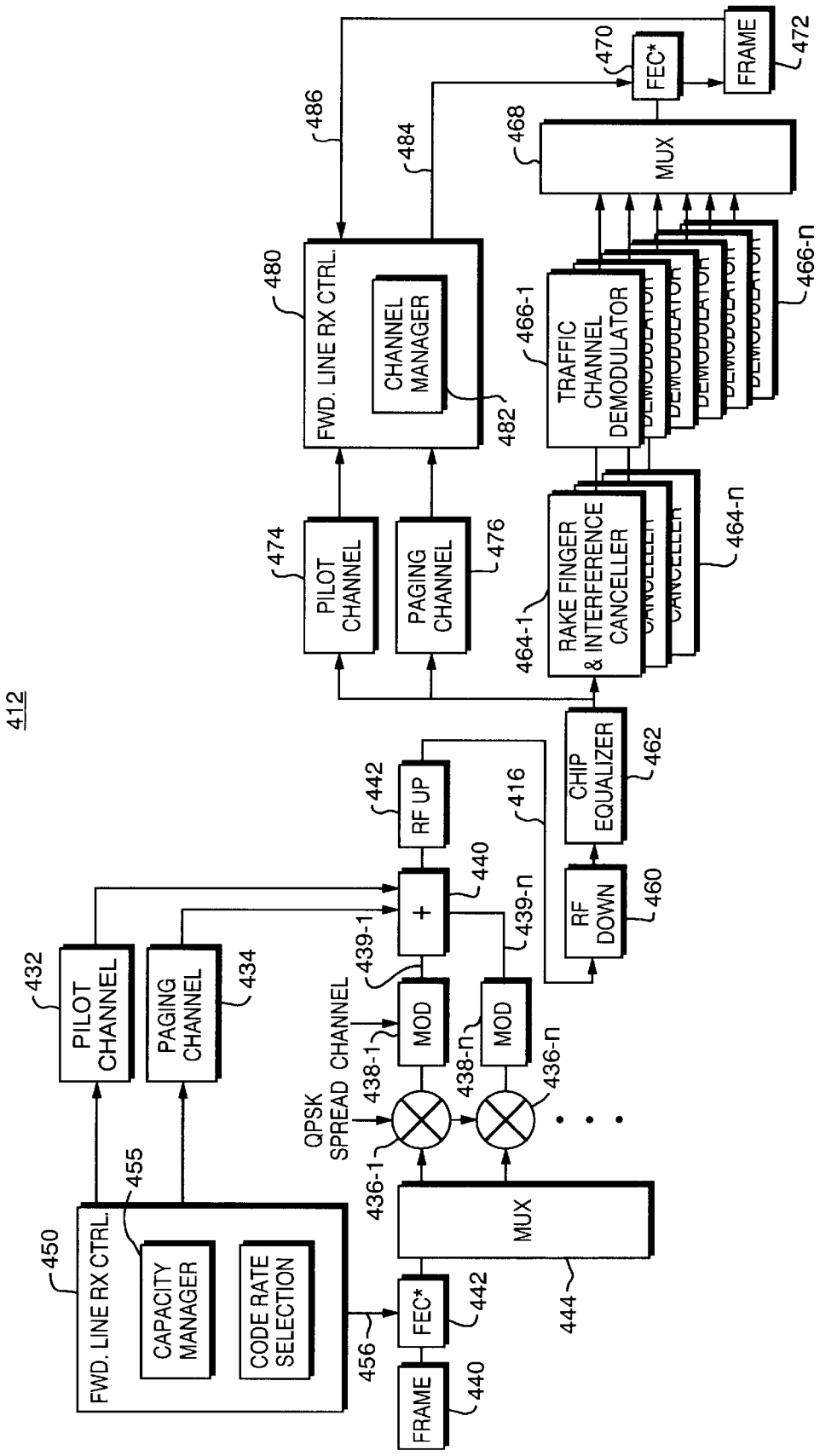
412
FWD. LINE RX CTRL.
450
CAPACITY MANAGER
455
CODE RATE SELECTION
PILOT CHANNEL
432
PAGING CHANNEL
434
QPSK SPREAD CHANNEL
436-1
436-n
MOD
438-1
438-n
+
439-1
439-n
MUX
444
FEC*
442
456
FRAME
440
RF UP
442
440
416
CHIP EQUALIZER
462
RF DOWN
460
RAKE FINGER & INTERFERENCE CANCELLER
464-1
464-n
TRAFFIC CHANNEL DEMODULATOR
466-1
466-n
DEMODULATOR
MUX
468
FEC*
470
FRAME
472
FWD. LINE RX CTRL.
480
CHANNEL MANAGER
482
484
486
PILOT CHANNEL
474
PAGING CHANNEL
476

FIG. 4

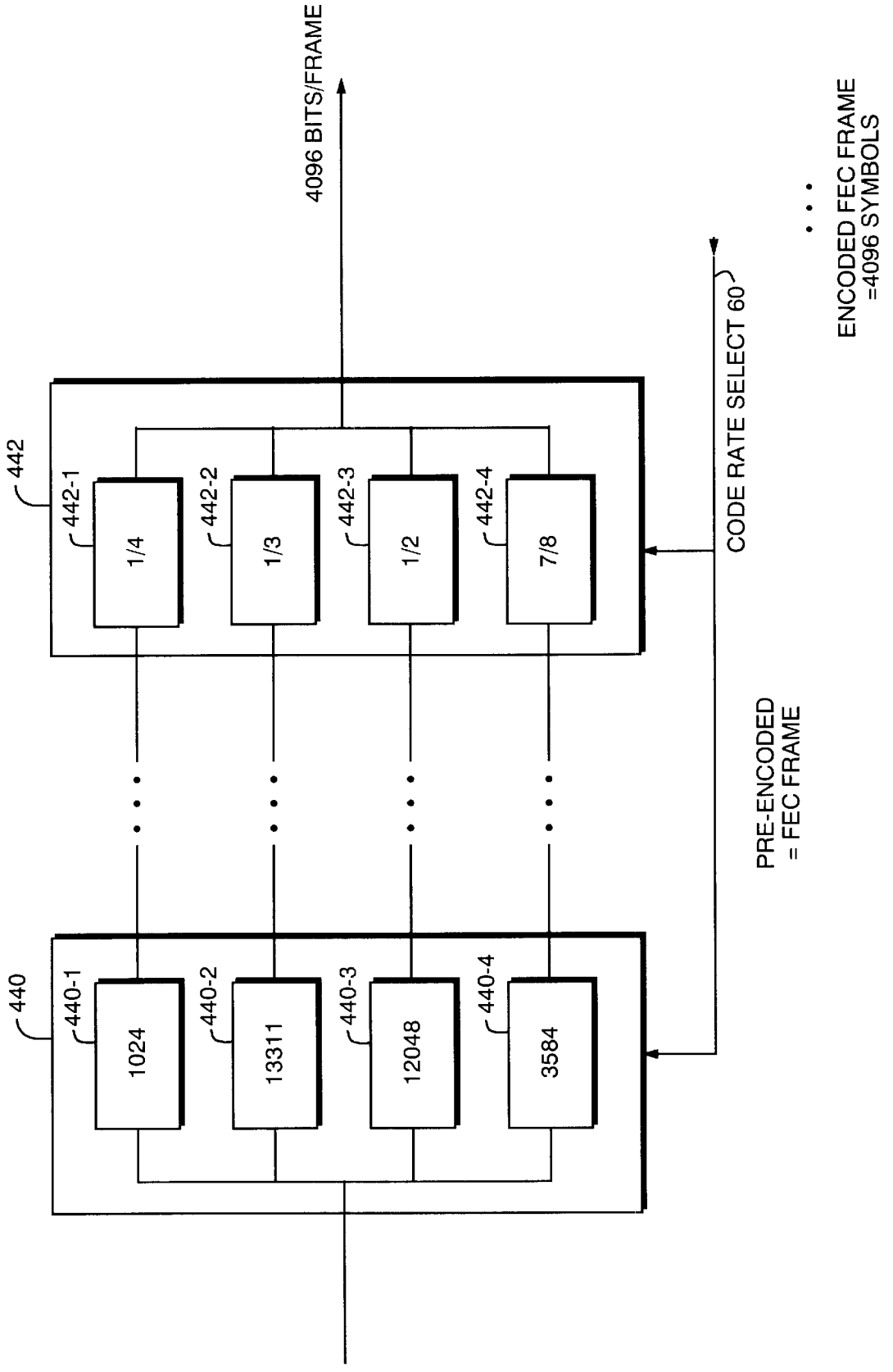
4096 BITS/FRAME
CODE RATE SELECT 60
ENCODED FEC FRAME
=4096 SYMBOLS
PRE-ENCODED
= FEC FRAME
442
442-1
1/4
442-2
1/3
442-3
1/2
442-4
7/8
440
440-1
1024
440-2
13311
440-3
12048
440-4
3584

FIG. 5

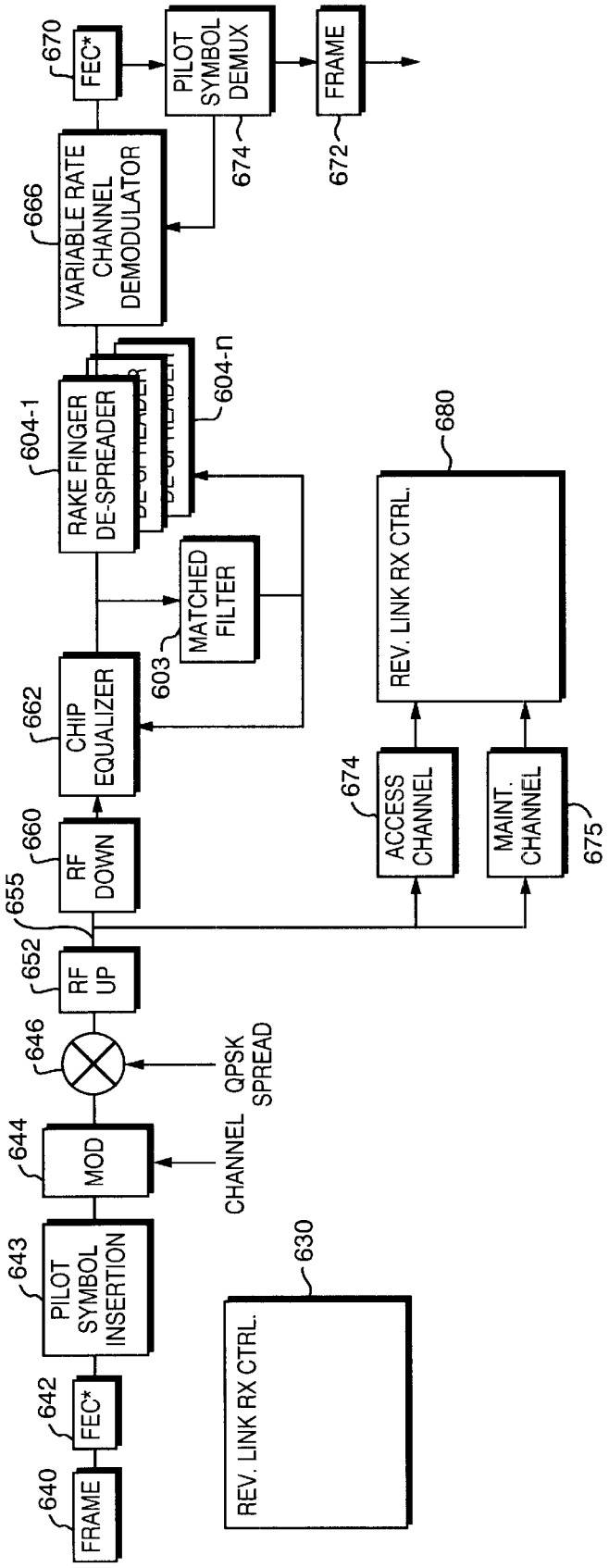
640
FRAME
642
FEC*
643
PILOT SYMBOL INSERTION
644
MOD
646
652
RF UP
655
660
RF DOWN
662
CHIP EQUALIZER
603
MATCHED FILTER
604-1
RAKE FINGER DE-SPREADER
604-n
666
VARIABLE RATE CHANNEL DEMODULATOR
670
FEC*
672
FRAME
674
PILOT SYMBOL DEMUX
630
REV. LINK RX CTRL.
CHANNEL
QPSK SPREAD
674
ACCESS CHANNEL
675
MAINT. CHANNEL
680
REV. LINK RX CTRL.

FIG. 6

METHOD AND APPARATUS FOR A SPECTRALLY COMPLIANT CELLULAR COMMUNICATION SYSTEM

BACKGROUND OF THE INVENTION

The evolution of communication technologies continues to drive user preferences in the manner of access to networks. Wireless networks, especially for voice communications, now provide coverage in most areas of the industrialized world. Indeed, wireless voice communications are becoming a preferred method in many instances because of their convenience. In certain situations, it may even be less expensive to use a wireless telephone. For example, wireless phone service may actually be less expensive than bringing a second wired telephone into a home, or in remote areas.

At the same time, demand for data communication services and in particular demand for reliable high speed access to the Internet is also growing. This demand is growing so fast that local exchange carriers (LECs) are concerned that the demand will cause their networks to fall. It is expected that as time goes on, at least some of this demand will eventually shift to the wireless side, especially with the popularity of laptop computers, personal digital assistants, and other portable computing devices increases.

At the present time, there are difficulties integrating available wireless data systems with existing computer network infrastructure. To provide coverage to an area requires planning of various network components, as well as obtaining necessary licensing to access the airwaves from government authorities. In particular, not only must wireless modulation schemes be chosen from among the myriad of possibilities, including analog modulation standards such as AMPS, TACS and NMT, but also the emerging digital standards, including Time Division Multiple Access (TDMA) schemes such as Global System for Module (GSM) communications, and Code Division Multiple Access (CDMA). In addition, site locations for base station equipment must be chosen and acquired. Additional engineering is often required to determine proper tower heights, effective radiated power levels, and assignment of a frequency plan to an area within which wireless service is desired.

Although it provides almost ubiquitous coverage, the existing cellular voice infrastructure has been very expensive to build-out. Therefore, the most common method of using the cellular infrastructure to send data is quite analogous to how computers presently use wired telephones. In particular, digital data signals are first formatted by modern equipment to generate audio tones in the same manner as used for the wireline network. The audio tones are then fed to cellular voice transceiving equipment which modulates these tones according to the interface scheme in use. For example, an input data stream such as produced by a computer is first modulated to generate frequency shift keyed (FSK) signals at audio frequencies. The FSK audio signal is then modulated using, for example, the IS-95B standard for CDMA modulation such as is prevalent in the United States. This modulation scheme impresses a pair of codes on a given radio frequency signal including a pseudorandom noise (PN) spreading code and a orthogonal code to define multiple traffic channels.

It is also possible to use separate networks built specifically for data services such as so-called Cellular Packet Data (CDPD) networks. However, CDPD coverage is not nearly as ubiquitous as the coverage presently provided for cellular voice communications. This is most likely because the build-out of a CDPD network requires all of the costs associated with building out a separate network, including planning of base station sites, obtaining licensing, acquiring such sites and engineering their tower heights and radiated powers and frequency planning.

As mentioned above, the most popular communication scheme for voice cellular networks at the present time is based upon CDMA modulation. These standards dictate a radio frequency (RF) channel bandwidth of 1.2288 megahertz (MHz). Therefore, RF system planning engineers and component industries have standardized their products based upon this particular channel bandwidth, and these networks have been built out with radio equipment, site locations, tower heights, and frequency plans that assume this channel spacing.

Unfortunately, these CDMA standards also specify other parameters for the communication which are not optimized for data traffic. These include the soft hand-off processing needed to transfer control of a call from one base station to another with the cooperation of the subscriber unit. The requirements reduce overall system capacity since individual users may be communicating with two or more base stations at any given time.

Furthermore, existing CDMA protocols for wireless service assume that connections are to be maintained for the duration of a call. This is quite unlike the typical Internet connection which is quite irregular in its actual demand for information. For example, after requesting a Web page, the typical Internet user then expects a relatively large amount of data to be downloaded. However, the user then spends many seconds or even minutes viewing the Web page before additional information needs to be transmitted.

SUMMARY OF THE INVENTION

Briefly, present invention is a system for wireless data transmission that uses a channel bandwidth, channel separation, and radio frequency power spectrum which are compatible with existing deployments of wireless voice networks. However, the wireless data protocol specifies digital coding, modulation, channel use allocation, and power control schemes that are optimized for data communications. Thus, the transmitted waveforms, although appearing to be of a different format when viewed from a time domain perspective are, in general, compatible from a frequency domain perspective with existing cellular networks.

As a result, a data communication system utilizing this wireless data protocol has the same appearance from a radio frequency network planning perspective as a standard cellular system. Thus, from a service provider's point of view, an optimized data service can be deployed using the same base station locations, tower heights, cell sites, and cell radii, as well as frequency reuse plans that were already developed for existing voice networks. However, from the perspective of the Internet service provider and the user, the system is optimized for data transmission.

BRIEF DESCRIPTION OF THE DRAWINGS

The foregoing and other objects, features and advantages of the invention will be apparent from the following more particular description of preferred embodiments of the invention, as illustrated in the accompanying drawings in which like reference characters refer to the same parts throughout the different views. The drawings are not nec-

essarily to scale, emphasis instead being placed upon illustrating the principles of the invention.

FIG. **1** is a high level block diagram of a system for providing wireless data service according to the invention.

FIG. **2** is a frequency domain plot of the channel spacing used with the invention.

FIG. **3** is a more detailed view of the components of a base station processor.

FIG. **4** is a detailed diagram of components of a base station and subscriber unit used to implement forward link communication.

FIG. **5** is a diagram depicting how different selectable data rates may be supported.

FIG. **6** is a detailed diagram of components used to implement reverse link communication.

DETAILED DESCRIPTION OF A PREFERRED EMBODIMENT

FIG. **1** illustrates a cellular radio telephone communication system **10**. As in the prior art, the system **10** includes one or more mobile users or subscribers **12**, including a voice subscriber unit **12-1** such as associated with a moving vehicle, and a data subscriber unit **12-2** such as associated with a laptop computer. Base stations **14-1**, **14-2**, **14**-n are each associated with one of a number of cells **16-1**, **16-2**, . . . , **16**-n with each cell **16** representing portions of an area within which the system **10** is providing wireless communication. Each base station **14** also has an associated base station processor BSP **18**. A mobile telephone switching office **20** couples traffic and control signaling between other networks **30**, **36** and each of the base station processors **18**. Although only three cells **16** are shown in FIG. **1**, a typical system **10** may include hundreds of base stations **14** and cells **16** and thousands of subscriber units **12**.

The cellular network **10** provides a duplex radio communication link **22** between each base station processor **18** and mobile subscriber units **12** traveling within the associated cell **16**. The function of the base station processor **18** is mainly to manage radio communication with the subscriber unit **12**. In this capacity, the base station processors **18** serve chiefly as relay stations for both data and voice signals.

With the present invention, however, the base station processor **18** separately handles voice and data traffic. In particular, radio channels associated with servicing the voice units **12-1** are handled differently from the radio channels associated with handling the data traffic for the data user **12-2**. Thus, these radio channels are respectively coupled to different circuits in the mobile telephone switching office **20**. For example, different radio channels are associated with servicing the mobile voice unit **12-1** than the channels associated with servicing the data subscriber unit **12-2**. More specifically, circuits **24-1** associated with voice traffic connect to a voice traffic processor **26** within the mobile telephone switching office **20**. Voice signals are then routed through a voice switch **27** to a voice network such as the Public Switched Telephone Network (PSTN) **30** and on to a destination telephone **32**. Voice traffic heading in the forward direction from the telephone **32** to the mobile unit **127** is handled in an analogous way, but in reverse order.

On the other hand, data signals associated with the data subscriber unit **12-2** are first coupled to a different circuit **24-2** to a data traffic processor **28**. The data signals are in turn fed through a gateway **29** such as may be a router, data switch, concentrator, or other network point-of-presence to provide connections to a data network such as the Internet **36**. The data signals are eventually coupled to and from a destination such as a computer **38** which may, for example, be an Internet server.

Cellular telephone systems have traditionally employed analog modulation schemes such as frequency division multiple access (FDMA) to carry signals between the subscriber units **12** and the base station **13** wherein a radio telephone communication channel includes one or more carrier frequency bands which are dedicated to each user for the duration of a particular call. To provide greater channel capacity and to more efficiently use the radio spectrum, however, present emerging networks now operate using digital modulation schemes such as time division multiple access (TDMA) or code division multiple access (CDMA). Communications in a TDMA system occur by assigning a series of time slots on each carrier frequency band, with individual subscriber units typically being allocated one or more time slots. Of more interest to the present invention are CDMA systems, in which each user is assigned one or more unique channel codes. Each channel code corresponds to a digital modulation sequence used for spreading the transmit energy of the communication signals over a broad bandwidth. A receiving station uses the same code to despread the coded signal and recover the base band information.

One such CDMA scheme in widespread use in the United States is specified as Telecommunications Industry Association (TIA) standard IS-95B. As shown in FIG. **2**, the IS-95B standard specifies that an IS-95A voice channel **40-1**, **40-2**, . . . , **40**-n occupy a bandwidth of 1.2288 MHz, even though such voice signal may have originated only as a several kilohertz bandwidth signal. Thus, the affect of the spreading codes is to greatly increase the required bandwidth of each channel although many different subscribers **12** may be sharing the channel at any given time.

In accordance with the invention, certain coded traffic channels **40-1**, **40-2**, **40**-n, are associated with servicing mobile voice units **12-1** whereas other coded traffic channels **42-1** are associated with servicing data subscribers **12-2**. More specifically, the channel coding, channel allocation, power control, and handoff schemes used for the voice channels **40** may be compliant with industry standard IS-95B. However, the data channels **42**, are also compliant with the voice channels **40** from a frequency bandwidth and power spectrum perspective. In particular, the data channels **42** appear as shown in FIG. **2** to be identical to the voice channels from a frequency domain perspective. However, they use a channel coding, channel allocation, handoff, and power control scheme which is optimized for Internet Protocol (IP)-type data access and which is different from the channel coding used for the voice channels. While the data channels may use a CDMA-type encoding, it is not the same as the CDMA encoding used for the voice channels.

FIG. **3** is a more detailed view of how a typical base station processor **18** handles voice and data signals differently according to the invention. The base station processor **18** consists of a voice traffic processor **310** including a voice channel controller **312**, and forward link components, including a forward link encoder **314**, and transmit modulator **316**, as well as reverse link components, including a receive demodulator **317** and reverse link decoder **318**. Completing the circuits which process voice channels are a voice channel radio frequency (RF) upconverter **320** and RF downconverter **322**.

Also included within the base station processor **18** is a data traffic processor **330** which includes a data channel controller **332**, forward link encoder **334**, transmit modula-

tor **346**, reverse link decoder **348**, and receive demodulator **349**. Also forming part of the data handling circuits are a data channel RF upconverter **340** and RF downcoverter **342**.

The voice traffic processor **310** and RF up- and downconverter circuits **320** and **322** operate essentially as in the prior art. For example, these circuits are implemented in accordance with the IS-95B air interface standard, to provide duplex voice communications between the mobile subscriber unit **12** and the mobile telephone switching office **20**. In particular, in the forward direction, that is, for voice signals traveling from the PSTN through the MTSO **20** towards the subscriber unit **12**, channel signals received over the network connection **24-1** are fed to the forward link encoder **314**. The network connection **24-1** may, for example, use a carrier-grade multiplex circuit over digital transport cabling such as T1 carrier circuits.

The IS-95 standard specifies that the forward link encoder **314** encodes the signal with a pseudorandom noise (PN) spreading code and orthogonal Walsh code to define the voice channel. A transmit modulator then impresses the desired modulation such as quadrature phase shift key (QPSK) modulation onto this signal, which is then forwarded to the RF upconverter **320**.

In the reverse link direction, that is, for signals traveling from the mobile unit **12** through the base station **18** towards the mobile telephone switching office **20**, signals received from the RF downconverter **322** are passed to the receive demodulator **317** and reverse link decode circuits **318**. The receive demodulator **317** removes the modulation from the signals, with the reverse link decoder **318** then stripping off the pseudorandom noise and Walsh channel coding to provide a digitized voice signal to the network connection **24-1**.

The voice channel RF upconverter **320** and RF downconverter **322** are tuned to the channels **40** that are devoted to voice traffic. Specifically, only channels devoted to voice traffic are allowed to be allocated by the voice channel controller **312** to the voice traffic processor **310**. In addition, the voice channel controller **312** also controls the remainder of the circuits of the voice traffic processor **310** in accordance with the IS-95B standard. For example, radio channels **40** are allocated on a per-call basis. That is, whenever a user of a mobile subscriber unit **12** wishes to place a call by dialing a telephone number of the destination telephone **32**, the channel controller **312** opens and maintains an RF forward link channel and RF reverse link channel by activating encoder **314**, decoder **318**, modulator, and demodulator circuits of the traffic processor **310**, dedicating those channels to that call as long as the call is in progress.

In addition, functions associated with mobility such as call handoff, in particular the soft handoff algorithms dictated by IS-95B, are performed also by the voice channel controller **312**.

Turning attention now to the data traffic processor **330**, it will now be explained how these circuits handle their signaling in a different way than the voice traffic processor **310**. In the forward link direction, signals are received from a data transport media **24-2** and are fed to a forward link encoder **334** and transmit modulator **346**. However, the forward link encoder **334** and transmit modulator **346** operate differently than the corresponding components **314** and **316** in the voice traffic processor **310**. One such difference relates to the fact that (as will be described in greater detail in connection with FIGS. **4** and **5**) forward error correction (FEC) coding rates are adapted for individual channels to allow different coding rates to be assigned to each user. In addition, the forward link encoder and transmit modulators are only allocated on an instantaneous demand basis. Thus, steps are taken to ensure that coded data radio channels are only allocated to data subscribers **12-2** which actually have data ready to be transmitted or received.

The data channel controller **332** responsible for allocating radio channels to the data subscriber **12-2** also handles mobility and handoff of data calls in a way which is different from the channel controller **312** associated with the voice traffic processing **310**. In particular, the data channel controller **332** in the preferred embodiment supports nomadic-type mobility only. That is, the data users **12-2** are not expected to cross a boundary between two cells **16-1** and **16-2**, for example, during the duration of an active connection. However, the system **10** does provide service if, for example, a data user **12-2** disconnects, at least the radio connection, moves to a different cell, and then reestablishes a radio connection.

The data traffic processor **330** will be described in greater detail now in connection with FIG. **4**. This figure illustrates a detailed view of the forward link processing used to transmit data signals from the base station **18** to the data subscriber units **12-2**. In the base station **18**, these include a forward link transmit controller **450** and signal processing circuits which generate the various signals making up the forward link transmitted signals. These include circuits for implementing functions such as a pilot channel **432**, paging channel **434**, and one or more traffic channels **436**. As it is known in the art, the pilot channel **432** is responsible for generating known continuous pilot signals that permit receiver circuits in the subscriber unit **12** to properly synchronize to signals transmitted by the base station **18**. The paging channel **434** sends control signals to the subscriber unit **12** to, for example, allocate traffic channel capacity over the forward link **416**. For example, the paging channel **434** is used to send messages to the subscriber unit **12** when it is necessary to allocate a traffic channel on the forward link to send messages.

The traffic channel **436** provides a physical layer structure for sending payload data over the forward link. In a preferred embodiment, CDMA encoding is used to define the pilot channels **432**, paging channels **434**, as well as the traffic channels **436**. More specifically, the traffic channel circuitry **436** includes symbol framing function **440**, forward error correction logic **442**, a multiplexer **444**, a summer **450**, and radio frequency (RF) upconverters **452**.

Data which is to be sent over the forward link **416** is first fed to the framing function **440**. The framing function **440** packages input payload data into conveniently sized groups referred to as frames. The size of these pre-encoded frames will vary depending upon the particular forward error correction (FEC) coding scheme selected at any given time by the FEC encoder **442**. What is important is that the combination of the framers **440** and FEC encoder **442** produce a fixed number of output FEC symbols in each given transmitted frame.

FIG. **5** is a diagram showing how the framers **440** and FEC encoders **442** are selected in pairs to accomplish this end result. The fixed output FEC frame size in the illustrated embodiment is 4096 symbols. This embodiment uses four different FEC symbol encoders **442-1**, **442-2**, **443-3** and **442-4** providing, respectively, a 1/4, 1/3, 1/2, and 7/8 rate encoding. The coding rate of each FEC symbol encoder **442** indicates the ratio of the number of input bits to the number of output bits. The actual codes used by the FEC encoders **442** may be any of a number of different types of error correction codes such as R, thus, a higher information rate is obtained with higher rate FEC code.

This embodiment also uses four framer circuits **440-1**, **440-2**, **440-3**, **440-4** corresponding to the four FEC encoders **442-1**, **442-2**, **443-3** and **442-4**. For example, the 1/4 rate encoder **442-1** requires a 1/4 rate framing circuit **440-1** which groups incoming bits into pre-coded FEC groups of 1024 bits, producing the desired 4096 output symbols. Similarly, the 1/3 rate encoder **442-2** requires a 1/3 rate framer **440-2** to group incoming bits into pre-encoded sets of 1331 bits. The 1/4 rate encoder **442-3** uses a framer **440-3** with a pre-encoded set size of **2048**, and 7/8 encoder **442-4** uses a framing circuit **440-4** with the pre-encoded size of 3584 bits.

Framing circuit **440** and FEC encoder **442** thus only utilize one of the specific framers **440-1**, **440-2**, **440-3**, or **440-4**, and one of the specific encoders **442-1**, **442-2**, **443-3** and **442-4** at any given point in time. Which particular framing circuit **440** and FEC encoder **442** is activated is controlled by coding rate control signal **456** input to each of the framing circuits **440** and encoder **442**. The code rate select signal **456** is generated by the forward link transmit controller **450**.

A given connection may require multiple traffic channels to be allocated to at a particular time. For example, the demultiplexer **444** accepts the signal produced by the FEC encoder **442** being to multiple spreading circuits **436-1** and channel modulators **438-1** which impress not only the quadrature phase shift keyed (QPSK) modulation, but also the appropriate pseudorandom noise (PN) and/or Walsh orthogonal coding in order to produce multiple CDMA channel signals **439-1**, . . . , **439**-n. As mentioned previously, the QPSK spreaders **436** and modulators **438** ensure that the modulated bandwidth and power spectrum of the forward link signal produced by the data traffic processor **330** is the same as the modulated bandwidth and power spectrum of the modulated voice signals produced by the voice traffic processor. These multiple CDMA traffic signals are then summed by the summer **440**, together with the pilot channel signal produced by the channel pilot circuits **432** and the paging signal produced by the paging channel circuit **434** before is fed to the RF upconverter **442**.

The forward link transmit controller **450**, which may be any convenient suitable microcontroller or microprocessor, has among its software programs a process referred to as the capacity manager **455**. The capacity manager **455** not only allocates one or more of the channel modulators **448** to a specific forward link traffic channel, but also sets the value for the code rate select signals **456**. In addition, the capacity manager **455** sets power levels for a particular forward link signals **416**.

A single capacity manager **455** in a base station processor **12** may manage multiple traffic channel circuits, setting their respective code rate select signal **456** according to observed conditions in a corresponding traffic channel. These adjustments to the channel physical layer characteristics are made preferably in response to determining a signal strength value, such as by measuring a ration of the energy per data bit divided by a normalized noise power level (Eb/No) at the receiver.

Thus, in addition to changing the power level of the individual modulated signals generated by the modulators **448**, it is also possible with a system according to the invention to control the Eb/No at the receiver by adjusting the value of code rate select signal **456** in order to select different code rates under different conditions.

For example, if a remote access unit **12** located deep inside of building is experiencing particularly adverse multipath or other distortion conditions, in the past it would have been thought to be necessary to increase the power level of the forward link **16**-n in order to obtain an appropriate received signal level at the access unit **12**. However, with the invention, if a full maximum data rate is not needed, then the coding rate implemented by the FEC encoder **442** can be lowered.

And in other environments where multipath distortion is minimal, such as in a direct line of sight situation, the highest code rate generate **442-4** can be selected while at the same time reducing the radiated power level on forward link for that particular channel. This, therefore, maximizes the available data rate for given user while also minimizing interference generated to other users of the same radio channel.

Thus, in environments where propagation is good, the system **10** can increase the data rate to a given user without introducing additional interference to other users. However, in a bad signaling environment, an advantage is also obtained since each particular user channel can be made more robust without increasing its power level.

Continuing to pay attention to FIG. **4**, various components of the receiver portion of the access unit **12** will be discussed in more detail. These consist of an RF downconverter **460**, equalizer **462**, multiple rake receivers **464-1**, . . . , **464**-n, multiple channel demodulators **466-1**, . . . , **466**-n, a multiplexer **468**, an FEC decoder **460**, and framing circuit **472**.

The RF downconverter **460** accepts the forward link signal, producing a baseband digitized signal. The chip equalizer **462** provides equalization of individual chips of the received signal, fitting it to several rake finger and interference cancellation circuit **464-1**. These circuits cooperate with multiple channel demodulator **466-1** in a manner which is known in the prior art and a strip off the CDMA encoding on each channel. Pilot receiving circuit **474** and paging signal receiving circuit **476** similarly are adapted for receiving the pilot channel signal generated by and the paging signal generated by the base station processor **12**. The multiplexer **468** reconstructs signals in the situation where multiple traffic channels were allocated to the particular connection.

A forward link receive controller **480** executes programs which set various parameters of the components of the traffic channel circuit **58**. Of particular interest here is the fact that this controller **480** executes a management process **482** which determines the coding rate select signal **484** to be sent to the FEC decoder **470**.

Specifically, the coding rate selected by the FEC decoder **470** at the receiving portion of access unit **12** must be the same as the coding rate of the FEC encoding at the transmitting base station processor **18** in order for the receiving framing circuit **472** to correctly reproduce the input data signal. Thus, in order for the system **10** to adapt to changing conditions in the RF link, it is necessary for the station processor **18** to communicate this information to the access unit **12** in some manner.

For example, if it is desired to allow the coding rate to change during the duration of a connection, which is the case in the preferred embodiment, the paging channel **434** may initially include, during a channel acquisition sequence or commands to inform the access unit **12** not only of the different encoded and modulated carrier frequencies on which it will be communicating, but also to inform it of the particular encoding rate that it will be using. Then, as a connection remains open and coding rates that are optimum change over time, additional control messages may be

embedded in the traffic channel itself. In the preferred embodiment, this is accomplished by embedding a command message within the received data which is fed back to the controller **480** via a command signal input **486**.

It should be understood that measures of link quality can also be determined by the controller **480** from the output signal **486** and periodically sent back to the controller **450** in the base station **18** via a command structure on a reverse link channel (not shown). This permits the controller **450** at the base station processor **12** to appropriately set optimum FEC coding rates to be used by the FEC encoder **442** and the FEC decoder **470** for particular connections.

Turning attention now to FIG. **6** the reverse link implementation will be described in more detail.

The forward link controller **430** uses a capacity manager **436** that bases allocation of traffic channels on the forward link **416** depending upon demand, and continues demand bases rather than upon per call basis. That is, as a user comes on line a connection may be established between a user and a network layer connector computer. However, this connection is maintained in a logical sense although radio channels may not be allocated to the user when data need not be sent.

Functions analogous to those provided by the forward link are provided by the reverse link. Specifically, in the transmit direction on the reverse link, a framing circuit **640**, and an FEC encoder **642** operate as for the forward link previously described in connection with FIG. **4**. However, on the reverse link, there is no specific pilot channel dedicated for transmission of a continuous pilot signal. Instead, pilot symbols are inserted among the data by the pilot symbol insertion mark **643**. Channel modulator **644**, QPSK spreader **646**, and RF upconverter **652** provide the transmitted reverse link signal **655**.

The reverse link signal **655** then propagates from the access unit towards the base being first received by the RF downconverter **660**. The RF downconverter steers access signals to the access channel block **674** and maintenance channel signals to the maintenance channel signal block **675**. These provide information to the reverse link receiver controller **680** to permit the remainder of the components to accurately demodulate the data to determine the FEC encoding and decoding rates, and other functions.

These components include a chip equalizer **662**, which provides a function analogous to the chip equalizer **462** in the forward link receiver as previously described, a matched filter **663**, which assists in separating data symbols from pilot symbols, and a set of rake finger despreaders **664-1** . . . , **664**-n providing a function analogous to the rake finger receivers **464** previously described. The variable rate channel demodulator **666** operates similarly to the channel demodulator **466** previously described. Finally, an FEC decoder **670** and pilot symbol demultiplexer **674** remove data symbols from the decoded signal, and in connection with framing logic **672**, produce the output data.

While this invention has been particularly shown and described with references to preferred embodiments thereof, it will be understood by those skilled in the art that various changes in form and details may be made therein without departing from the scope of the invention encompassed by the appended claims.

What is claimed is:

1. A system for providing a data communication service over wireless radio links, the system dedicating at least one radio channel for data services only, and the dedicated channel not being used for providing a voice service, the system comprising:

a modulator, for modulating data to be transmitted over the dedicated channel, the modulator producing a modulated data signal having a bandwidth which is the same as modulated signal bandwidth of a voice signal modulated according to a digital wireless air interface standard for voice signal communication;

a radio frequency upconverter, for upconverting the modulated data signal to a radio carrier frequency such that a channel spacing between the modulated data signal and other radio signals in the system is compatible with a channel spacing specified by the digital wireless air interface standard; and

an encoder, for encoding the data prior to feeding the data to the modulator, the encoder being optimized for data services and using a different encoding scheme than an encoding scheme specified for voice signal communication by the digital wireless air interface standard.

2. A system using claim **1** additionally comprising;

a channel allocator, for allocating data channels depending upon demands of the data communication service, independently of allocation of channels specified by the digital wireless air interface standard.

3. A system as in claim **1** wherein the digital wireless air interface standard is IS-95.

4. A system as in claim **1** wherein the modulator uses spread spectrum modulation to produce a Code Division Multiple Access (CDMA) signal to provide multiple channels on each radio carrier frequency.

5. A system as in claim **4** wherein multiple traffic channels are active on a given dedicated radio carrier frequency at a given time, and wherein the coding rates used by the encoder are different for different data signals.

6. A system as in claim **1** wherein the system is a cellular system and the data services portion of the system does not support hand over of connections between cells, but wherein the voice services portion of the system does support hand over.

7. A system for providing voice and data services over radio channels, the radio channels carrying traffic signals encoded using Code Division Multiple Access (CDMA) to define multiple logical channels on a single radio carrier frequency at the same instant in time, the system comprising:

a first radio channel modulator for accepting as input a voice services signal and digitally encoding the voice signal, and for digitally modulating the encoded voice signal to produce an encoded digitally modulated voice signal on a first one of the radio channels; and

a second radio channel modulator, for accepting as input a data services signal, and for digitally encoding the data services signal in a manner which is different from the encoding used for the voice services signal by the first modulator, and for digitally modulating the encoded data signal, to produce an encoded digitally modulated data signal on a second one of the radio channels, such that frequency spacing between the first and second radio channels, and the bandwidth of the digitally modulated data signal, are compatible with an air interface standard specified for wireless voice signalling.

8. A system as in claim **7** wherein the air interface standard is IS-95.

9. A system as in claim **7** wherein coded logical channels are allocated to the voice services signals carried on the first

radio channel in a manner which differs from a manner of allocating coded logical channels to the data services signals carried on the second radio channel.

10. A system as in claim **7** wherein a transmitted radio frequency power spectrum is the same for the first and second radio channels.

11. A system as in claim **7** wherein a transmitted radio frequency power spectrum of the second radio channel is compliant with a transmitted radio frequency power spectrum of the first radio channel as specified by the air interface standard.

12. A system as in claim **7** wherein the first and second radio channels are transmitted from the same carrier base station site.

* * * * *

EXHIBIT I

US006614776B1

(12) **United States Patent**
Proctor, Jr.

(10) **Patent No.: US 6,614,776 B1**
(45) **Date of Patent: Sep. 2, 2003**

(54) **FORWARD ERROR CORRECTION SCHEME FOR HIGH RATE DATA EXCHANGE IN A WIRELESS SYSTEM**

(75) Inventor: **James A. Proctor, Jr.**, Indialantic, FL (US)

(73) Assignee: **Tantivy Communications, Inc.**, Melbourne, FL (US)

(*) Notice: Subject to any disclaimer, the term of this patent is extended or adjusted under 35 U.S.C. 154(b) by 0 days.

(21) Appl. No.: **09/301,484**

(22) Filed: **Apr. 28, 1999**

(51) **Int. Cl.**[7] **H04B 7/216**
(52) **U.S. Cl.** **370/342**; 370/320
(58) **Field of Search** 370/320, 328, 370/329, 334, 335, 342, 441, 535, 536, 541, 542; 375/135, 136, 137, 149, 141, 146

(56) **References Cited**

U.S. PATENT DOCUMENTS

4,460,992	A		7/1984	Gutleber 370/19
4,625,308	A		11/1986	Kim et al. 370/104
4,862,453	A		8/1989	West et al. 370/82
4,866,709	A		9/1989	West et al. 370/82
5,027,348	A		6/1991	Curry et al. 370/85
5,103,459	A		4/1992	Gilhousen et al. 375/1
5,115,309	A		5/1992	Hang 358/133
5,394,473	A		2/1995	Davidson 381/36
5,487,072	A		1/1996	Kant 371/32
5,559,788	A		9/1996	Zscheile, Jr. et al. 370/18
5,559,790	A	*	9/1996	Yano et al. 370/342
5,606,574	A		2/1997	Hasegawa et al. 375/200
5,663,958	A		9/1997	Ward 370/347
5,699,364	A		12/1997	Sato et al. 371/5.5
5,699,369	A		12/1997	Guha 371/41
5,777,990	A		7/1998	Zehavi et al. 370/335
5,781,542	A		7/1998	Tanaka et al. 370/342
5,805,567	A		9/1998	Ramesh 370/204
5,825,807	A		10/1998	Kumar 375/200

FOREIGN PATENT DOCUMENTS

EP	0 443 061 A1	2/1990
EP	0 635 949 A1	7/1994
EP	0 827 312 A2	8/1997
FR	2 266 389	4/1974
FR	2 761 557	3/1997
WO	WO 96/13914	6/1996
WO	WO 98/43373	1/1998
WO	WO 98/43373	10/1998
WO	WO 99/44341	2/1999
WO	WO 99/14878	3/1999
WO	WO 99/39472	5/1999
WO	WO 00/52831	9/2000
WO	WO 00/65764	11/2000

OTHER PUBLICATIONS

"Wireless Personal Communications Systems", David J. Goodman, 1997.

(List continued on next page.)

Primary Examiner—Nay Maung
(74) *Attorney, Agent, or Firm*—Hamilton, Brook, Smith & Reynolds, P.C.

(57) **ABSTRACT**

A transmitter/receiver system for high data transfer in a wireless communication system includes a physical layer processor that comprises an FEC coder, a demultiplexer and a plurality of modem processors. The FEC coder applies error correction codes to the high data rate signal. Thereafter, the demultiplexer distributes portions of the coded high data rate signal to the modem processors. Each modem processor processes its respective portion of the coded signal for transmission in an independent channel.

26 Claims, 1 Drawing Sheet

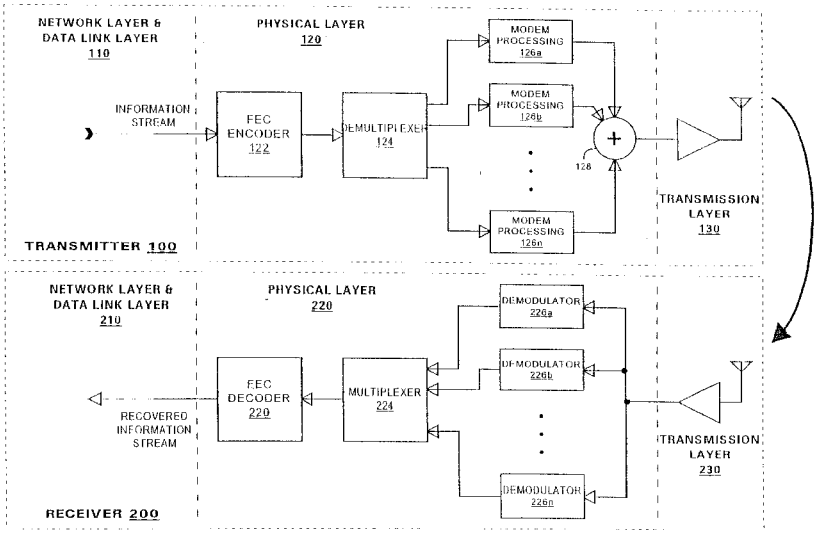

OTHER PUBLICATIONS

Author Unknown, "North American Cellular System Based On Code Division Multiple Access." pp. 203–254.

Lin, S., et al., "Automatic–Repeat–Request Error–Control Schemes," *IEEE Communications Magazine,* 22(12) : pp. 5–17 (Dec. 1984).

Hagenauer, J., "Rate–Compatible Punctured Convolutional Codes (RCPC Codes) and their Applications," *IEEE Transactions on Communications,* 36 (4) : pp. 389–400 (Apr., 1988).

Shacham, N., "A Selective–Repeat–ARQ Protocol for Parallel Channels and Its Resequencing Analysis," *IEEE Transactions on Communications,* 40 (4) : pp. 773–782 (Apr., 1992).

Wang, B. C., et al., "Speed Spectrum Multiple–Access with DPSK Modulation and Diversity for Image Transmission over Indoor Radio Multipath Fading Channels," *IEEE Transactions on Circuits and Systems for Video Technology,* 6 (2) : 200–214 (1996).

* cited by examiner

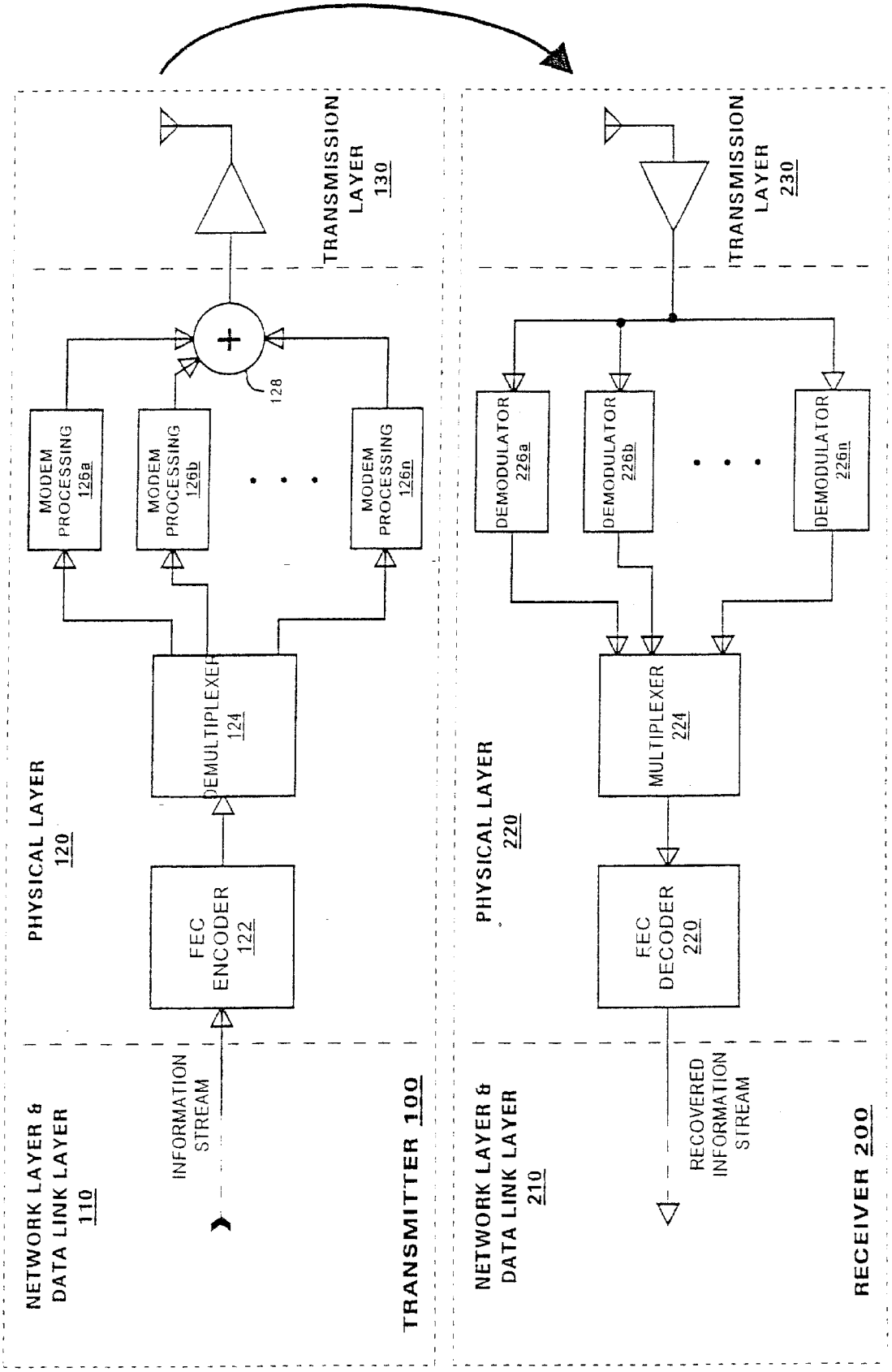
TRANSMISSION LAYER 130
TRANSMISSION LAYER 230
MODEM PROCESSING 126a
MODEM PROCESSING 126b
MODEM PROCESSING 126n
128
DEMODULATOR 226a
DEMODULATOR 226b
DEMODULATOR 226n
DEMULTIPLEXER 124
MULTIPLEXER 224
FEC ENCODER 122
FEC DECODER 220
PHYSICAL LAYER 120
PHYSICAL LAYER 220
NETWORK LAYER & DATA LINK LAYER 110
NETWORK LAYER & DATA LINK LAYER 210
INFORMATION STREAM
RECOVERED INFORMATION STREAM
TRANSMITTER 100
RECEIVER 200

FORWARD ERROR CORRECTION SCHEME FOR HIGH RATE DATA EXCHANGE IN A WIRELESS SYSTEM

BACKGROUND

The present invention provides a low latency error correction mechanism for high data rate transmissions over multiple traffic channels in a wireless communication system.

It is known to include forward error correction ("FEC") coding and decoding to information signals that are to be transmitted over a wireless channel. Forward error correction, generally speaking, introduces predetermined redundancy into an information signal to permit a receiver to identify and perhaps correct errors that may have been introduced by a transmission medium. For example, the known IS-95 standard for code division multiple access cellular communication specifies a type of convolutional code for each traffic channel transmitted from base station to mobile station or vice versa.

Recently, it has been proposed to provide high data rate exchanges over a wireless communication system. Such high data rate exchanges may be used, for example, to facilitate data transfer for computing applications or for video conferencing applications. In one such proposal, a high rate data signal may be communicated to a receiver over a plurality of parallel traffic channels. For example, the recently proposed IS-95 B standard proposes use of parallel CDMA channels each having a data rate of 9.6 KB/s to provide a higher data rate communication. In such systems, a high rate data signal is demuliplexed into a plurality of lower rate data signals and each of these signals is processed in an independent traffic channel. Thus, each lower rate data signal has FEC applied to it.

Another example of a wireless CDMA system providing multiple parallel traffic channels for high data rate exchange may be found in the copending patent application "Protocol Conversion and Bandwidth Reduction Technique Providing Multiple nB+D ISDN Basic Rate Interface Links Over a Wireless Code Division Multiple Access Communication System," Ser. No. 09/030,049 filed Feb. 24, 1998 the disclosure of which is incorporated herein.

Wireless communication channels are inherently "noisy" due to channel impairments caused by atmospheric conditions, multipath effects, co-channel interference and the like. Particularly if used for computing applications, where executable content may be expected to be exchanged over traffic channels, the need for powerful FEC techniques will continue to be prevalent.

Use of more powerful FEC techniques in such wireless systems may increase the latency of data requests. For example, the known turbo codes require large blocks of data to be received entirely by a decoder before decoding can begin. Latency refers generally to the delay that extends from the time a request for data is issued by a user and the time when data responsive to the request is presented to the user. FEC introduces decoding delays at a wireless receiver and, thus, contributes to latency.

There is a need in the art for a wireless communication system that provides high data rate exchange having high quality FEC with low latency.

SUMMARY

Embodiments of the present invention provide a transmitter/receiver system for high data transfer in a wireless communication system in which a physical layer processor comprises an FEC coder, a demultiplexer and a plurality of modem processors. The FEC coder applies error correction codes to the high data rate signal. Thereafter, the demultiplexer distributes portions of the coded high data rate signal to the modem processors. Each modem processor processes its respective portion of the coded signal for transmission in an independent channel.

BRIEF DESCRIPTION OF THE DRAWINGS

FIG. **1** illustrates a transmitter and a receiver each constructed in accordance with embodiments of the present invention.

DETAILED DESCRIPTION

The present invention provides low latency forward error correction for a high data rate wireless transmission by applying forward error correction codes to data prior to multiplexing the data across a plurality of parallel fixed bandwidth traffic channels.

FIG. **1** is a block diagram of a transmitter **100** and a receiver **200** each constructed according to embodiments of the present invention. The transmitter **100** and receiver **200** are illustrated as operating in a layered communication system that includes a transmission layer (**130**, **230**), a physical layer (**120**, **220**) and higher layer communications such as network layers and data link layers (collectively labeled **110** and **210**). As is known, in the transmission layer **130**, a transmitter **100** performs carrier modulation, amplification and transmission upon digital data to be transmitted. Also as is known, in the transmission layer **230**, a receiver **200** performs reception, amplification and carrier demodulation to obtain a recovered digital data signal. The higher layers **110**, **210** of the communication system also may process an information signal as may be required for the application for which the present invention is to be used.

According to an embodiment of the present invention, the physical layer **120** of the transmitter **100** may be populated by an FEC coder **122**, a demultiplexer **124** and a plurality of modem processors **126***a*–**126***n*. The number of modem processors **126***a*–**126***n* may vary and also may be determined by the quantity of data to be transmitted and the capacity of each of the traffic channels over which the data may be transmitted. The FEC coder **122** receives a source signal from a higher layer **110** in the transmitter and enhances it with an error correction code. The enhanced information signal is output from the FEC coder **122** to the demultiplexer **124**. The demultiplexer distributes the information signal to the modem processors **126***a*–**126***n*. The modem processors **126***a*–**126***n* each format their respective portions of the enhanced signal for transmission. Outputs from the modem processors **126***a*–**126***n* are summed by an adder **128** and delivered to the transmission layer **130**.

At the receiver **200**, the physical layer **220** performs processing that is the inverse of the processing that had been applied in the physical layer **120** of the transmitter **100**. The physical layer **220** may be populated by an FEC decoder **222**, a multiplexer **224** and a plurality of demodulators **226***a*–**226***n*. There will be one demodulator **226***a*–**226***n* for each of the traffic channels that had been allocated to carry the enhanced information signal. The recovered digital signal from the transmission layer **230** is input to each of the demodulators **226***a*–**226***n*. Each demodulator **226***a*–**226***n* outputs a recovered portion of the enhanced information signal. The multiplexer **224** merges each of the recovered portions of the enhanced information signal into a unitary

recovered enhanced information signal. The FEC decoder **222** performs error detection and correction using error correction codes that had been introduced by the FEC coder **122** in the transmitter **100**. The FEC decoder **222** outputs a corrected information signal to the higher layers **210** of the receiver **200**.

In a CDMA embodiment, which is shown in FIG. **1**, a receiver **200** need not include an element corresponding to the adder **128** of the transmitter **100**; the demodulators **226***a*–**226***n* each perform correlation. As is known, correlation permits a modem processor to discriminate a desired CDMA signal from other CDMA signals that may be present in an aggregate received signal. Thus, in the embodiment of FIG. **1**, the demodulators **226***a*–**226***n* identify and output respective portions of the recovered enhanced information signal.

According to an embodiment of the present invention, the FEC coder **122** and FEC decoder **222** may generate and decode iterative systematic nested codes, also known as "turbo" codes. These turbo codes provide an advantage in that the FEC decoding process may be repeated iteratively to improve the information signal recovered therefrom. Thus, the output of a first iteration may be reintroduced to the FEC decoding block (path not shown in FIG. **1**) for subsequent iterations. The nature of the turbo codes generates improved corrected data at subsequent iterations.

The known turbo codes, however, introduce a predetermined amount of latency into the decoding process. Turbo codes operate on blocks of a predetermined size. For example, one turbo code being considered for a wireless communication system for computer network applications possesses a block size of 4,096 channel symbols. An FEC decoder **222** must decode an entire block before a recovered information signal becomes available for the block. This characteristic may be contrasted with convolutional codes which are used in the known IS-95 standard for CDMA cellular communication; convolutional codes are characterized by relatively smaller latency for same-sized block (relative to turbo codes) because it is not necessary to receive an entire block before decoding may begin. It is believed that by distributing the FEC code among several parallel traffic channels as is shown in FIG. **1**, the higher aggregate throughput of the traffic channels ameliorates the latency that would otherwise be introduced by the turbo code.

For high data rate applications using plural parallel traffic channels, it is believed that use of turbo codes achieves a higher figure of merit (lower E_b/N_o than for convolutional codes. Using the example of a 4,096 channel symbol sized block and E_b/N_o of 1.5 dB the turbo code provides a BER of 10^{-6}. By contrast, for voice systems requiring a less stringent 10^{-3}BER, a convolutional code requires an E_b/N^o of 7 dB or more.

The techniques of the present invention find application in a variety of wireless communication systems including CDMA system. Typically, in application, the base stations and subscriber stations of the wireless communication system will include functionality of both the transmitter and receiver of FIG. **1**. That is, to provide two-way communication, a base station will include a transmitter portion **100** and a receiver portion **200**. So, too, with the subscriber terminal. The base stations and subscriber terminals may but need not be configured to provide simultaneous full-duplex communication.

Typically, a base station of a wireless communication system transmits a plurality of data signals to a variety of subscribers simultaneously. According to an embodiment of the present invention, each base station may perform the techniques disclosed herein simultaneously on a number of high rate data signals. It is consistent with the spirit and scope of the present invention that each signal may have a date rate that is independent of the data rates of the other signals. Thus, in such a case, a base station may be configured to include its FEC coder/decoders **122**, **222** and modem processor/demodulators **126***a*, **226***a* in a pooled configuration. Such an embodiment permits the base station to assign, for example, a variable number of modem processors **126***a*–**126***n* to a data signal depending upon the rate of the signal to be transmitted. Similarly, by including a pool of FEC coders **122** (shown singly in FIG.**1**) in a base station, the base station may selectively enable FEC coders **122** as the base station receives new data signals to be transmitted to subscribers. Provision of base station processing components in a pooled arrangement is well-known.

Several embodiments of the present invention are specifically illustrated and described herein. However, it will be appreciated that modifications and variations of the present invention are covered by the above teachings and within the purview of the appended claims without departing from the spirit and intended scope of the invention.

I claim:

1. In a CDMA (Code Division Multiple Access) transmitter, a physical layer processor comprising:

a source signal including data;

an FEC (Forward Error Correction) coder to receive the source signal and produce an enhanced source signal including data coded with error correction information;

a demultiplexer coupled to receive the enhanced source signal from the FEC coder;

a plurality of modem processors, each of which is coupled to a unique output of the demultiplexer to process respective portions of the enhanced source signal in independent channels;

an adder coupled to receive outputs of the modem processors to produce an aggregate signal, the aggregate signal being a summation of the enhanced signal processed in independent channels; and

a transmitter to transmit the aggregate signal over a carrier frequency.

2. The CDMA transmitter of claim **1** provided in a base station of a CDMA communication system.

3. The CDMA transmitter of claim **1** provided in a subscriber station of a CDMA communication system.

4. The CDMA transmitter of claim **1**, wherein the FEC coder operates according to an iterative systematic nested code.

5. The CDMA transmitter of claim **1**, wherein the FEC coder operates according to a turbo product code.

6. The CDMA transmitter of claim **1**, wherein the FEC coder according to a convolutional turbo code.

7. An apparatus as in claim **1**, wherein the aggregate signal is modulated onto a common carrier frequency.

8. In a CDMA receiver, a physical layer processor comprising:

a receiver that receives a wireless signal from a transmitter, the wireless signal being formed at the transmitter by a summation of portions of a coded signal that were processed in independent channels but were wirelessly transmitted as a single aggregate signal;

a plurality of demodulators coupled to receive an output of the receiver; and

a multiplexer coupled to direct an output of the demodulators to an FEC (Forward Error Correction) decoder to recover a single unitary information signal.

9. The CDMA receiver of claim **8** provided in a base station of a CDMA communication system.

10. The CDMA receiver of claim **8** provided in a subscriber station of a CDMA communication system.

11. The CDMA receiver of claim **8**, wherein the FEC decoder operates according to an iterative systematic nested code.

12. The CDMA receiver of claim **8**, wherein the FEC decoder operates according to a turbo product code.

13. The CDMA receiver of claim **8**, wherein the FEC coder according to a convolutional turbo code.

14. An apparatus as in claim **8**, wherein the aggregate signal is modulated onto a common carrier frequency.

15. A physical layer signal processor for use in transmitting a Code Division Multiple Access (CDMA) encoded signal, the signal processor comprising:

a Forward Error Correction (FEC) encoder, connected to receive a source signal, and to apply an error correction code;

a demultiplexer in communication with the FEC encoder, the demultiplexer outputting two or more demultiplexed encoded signals;

a plurality of modem processors, each receiving a respective one of the plurality of the demultiplexed encoded signals, the modem processors each modulating a respective one of the demultiplexer outputs applied thereto to produce a respective one of a plurality of transmission code modulated signals, the signal processor further characterized by:

an adder that is connected to receive the plurality of transmission code modulated signals to thereby produce an aggregate signal; and

a transmitter connected to receive the aggregate signal output by the adder, for producing an aggregate transmitted signal.

16. The processor of claim **15** provided in a base station of a CDMA communication system.

17. The processor of claim **15** provided in a subscriber station of a CDMA communication system.

18. The processor of claim **15**, wherein the FEC encoder operates according to an iterative systematic nested code.

19. The processor of claim **15**, wherein the FEC encoder operates according to a turbo product code.

20. The processor of claim **15**, wherein the FEC encoder encodes according to a convolutional turbo code.

21. A method for transmitting a high data rate signal over a wireless radio channel comprising the steps of:

enhancing the high data rate signal with the Forward Error Correction (FEC) code;

distributing the enhanced high data rate signal over a plurality of demultiplexed signals;

encoding each of the plurality of demultiplexed signals with a Code Division Multiple Access (CDMA) transmission code;

characterized by the additional steps of:

summing the plurality of CDMA transmission encoded signals to produce an aggregate signal; and

modulating the aggregate signal, to produce a transmitted signal.

22. The method of claim **21** in which the transmitted signal is provided to a base station of a CDMA communication system.

23. The method of claim **21** in which the transmitted signal is provided to a subscriber station of a CDMA communication system.

24. The method of claim **21**, wherein the FEC decoder operates according to an iterative systematic nested code.

25. The method of claim **21**, wherein the FEC decoder operates according to a turbo product code.

26. The method of claim **21**, wherein the FEC decoder operates according to a convolutional turbo code.

* * * * *

UNITED STATES PATENT AND TRADEMARK OFFICE

CERTIFICATE OF CORRECTION

PATENT NO. : 6,614,776 B1
DATED : September 2, 2003
INVENTOR(S) : James A. Proctor, Jr.

It is certified that error appears in the above-identified patent and that said Letters Patent is hereby corrected as shown below:

Column 4,
Line 55, after "coder" insert -- operates --;
Line 55, after "convolutional" insert -- or --.

Column 5,
Line 14, after "coder" insert -- operates --;
Line 14, after "convolutional" insert -- or --.

Column 6,
Lines 10 and 36, after "convolutional" insert -- or --.

Signed and Sealed this

Sixth Day of January, 2004

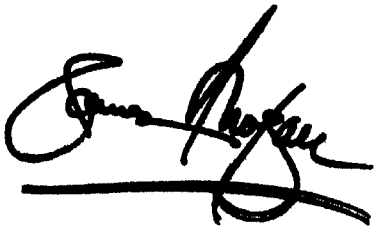

JAMES E. ROGAN
Director of the United States Patent and Trademark Office

JS 44 (Rev. 3/99)

CIVIL COVER SHEET

The JS-44 civil cover sheet and the information contained herein neither replace nor supplement the filing and service of pleadings or other papers as required by law, except as provided by local rules of court. This form, approved by the Judicial Conference of the United States in September 1974, is required for the use of the Clerk of Court for the purpose of initiating the civil docket sheet. (SEE INSTRUCTIONS ON THE REVERSE OF THE FORM.)

I. (a) PLAINTIFFS

SAMSUNG TELECOMMUNICATIONS AMERICA LLP and SAMSUNG ELECTRONICS CO., LTD.

(b) County of Residence of First Listed Plaintiff *
(EXCEPT IN U.S. PLAINTIFF CASES)

* First-listed plaintiff is a Delaware Corp.

DEFENDANTS

INTERDIGITAL COMMUNICATIONS CORPORATION, INTERDIGITAL TECHNOLOGY CORPORATION, and TANTIVY COMMUNICATIONS, INC.

County of Residence of First Listed _____
(IN U.S. PLAINTIFF CASES ONLY)
NOTE: IN LAND CONDEMNATION CASES, USE THE LOCATION OF THE LAND INVOLVED.

(c) Attorney's (Firm Name, Address, and Telephone Number)
Steven J. Balick
Ashby & Geddes
500 Delaware Avenue, 8th Floor
Wilmington, DE 19801 (302) 654-1888

Attorneys (If Known)

Unknown

II. BASIS OF JURISDICTION (Place an "X" in One Box Only)

- ☐ 1 U.S. Government Plaintiff
- ☒ 3 Federal Question (U.S. Government Not a Party)
- ☐ 2 U.S. Government Defendant
- ☐ 4 Diversity (Indicate Citizenship of Parties in Item III)

III. CITIZENSHIP OF PRINCIPAL PARTIES (Place an "X" in One Box for Plaintiff and One Box for Defendant)
(For Diversity Cases Only)

		DEF			DEF
Citizen of This State	☐ 1	☐ 1	Incorporated *or* Principal Place of Business In This State	☐ 4	☐ 4
Citizen of Another State	☐ 2	☐ 2	Incorporated *and* Principal Place of Business In Another State	☐ 5	☐ 5
Citizen or Subject of a Foreign Country	☐ 3	☐ 3	Foreign Nation	☐ 6	☐ 6

IV. NATURE OF SUIT (Place an "X" in One Box Only)

CONTRACT
- ☐ 110 Insurance
- ☐ 120 Marine
- ☐ 130 Miller Act
- ☐ 140 Negotiable Instrument
- ☐ 150 Recovery of Overpayment & Enforcement of Judgment
- ☐ 151 Medicare Act
- ☐ 152 Recovery of Defaulted Student Loans (Excl. Veterans)
- ☐ 153 Recovery of Overpayment of Veteran's Benefits
- ☐ 160 Stockholders' Suits
- ☐ 190 Other Contract
- ☐ 195 Contract Product Liability

REAL PROPERTY
- ☐ 210 Land Condemnation
- ☐ 220 Foreclosure
- ☐ 230 Rent Lease & Ejectment
- ☐ 240 Torts to Land
- ☐ 245 Tort Product Liability
- ☐ 290 All Other Real Property

TORTS

PERSONAL INJURY
- ☐ 310 Airplane
- ☐ 315 Airplane Product Liability
- ☐ 320 Assault, Libel & Slander
- ☐ 330 Federal Employers' Liability
- ☐ 340 Marine
- ☐ 345 Marine Product Liability
- ☐ 350 Motor Vehicle
- ☐ 355 Motor Vehicle Product Liability
- ☐ 360 Other Personal Injury

PERSONAL INJURY
- ☐ 362 Personal Injury—Med. Malpractice
- ☐ 365 Personal Injury—Product Liability
- ☐ 368 Asbestos Personal Injury Product Liability

PERSONAL PROPERTY
- ☐ 370 Other Fraud
- ☐ 371 Truth in Lending
- ☐ 380 Other Personal Property Damage
- ☐ 385 Property Damage Product Liability

CIVIL RIGHTS
- ☐ 441 Voting
- ☐ 442 Employment
- ☐ 443 Housing/ Accommodations
- ☐ 444 Welfare
- ☐ 440 Other Civil Rights

PRISONER PETITIONS
- ☐ 510 Motions to Vacate Sentence
- Habeas Corpus:
- ☐ 530 General
- ☐ 535 Death Penalty
- ☐ 540 Mandamus & Other
- ☐ 550 Civil Rights
- ☐ 555 Prison Condition

FORFEITURE/PENALTY
- ☐ 610 Agriculture
- ☐ 620 Other Food & Drug
- ☐ 625 Drug Related Seizure of Property 21 USC
- ☐ 630 Liquor Laws
- ☐ 640 R.R. & Truck
- ☐ 650 Airline Regs.
- ☐ 660 Occupational Safety/Health
- ☐ 690 Other

LABOR
- ☐ 710 Fair Labor Standards Act
- ☐ 720 Labor/Mgmt. Relations
- ☐ 730 Labor/Mgmt.Reporting & Disclosure Act
- ☐ 740 Railway Labor Act
- ☐ 790 Other Labor Litigation
- ☐ 791 Empl. Ret. Inc. Security Act

BANKRUPTCY
- ☐ 422 Appeal 28 USC 158
- ☐ 423 Withdrawal 28 USC 157

PROPERTY RIGHTS
- ☐ 820 Copyrights
- ☒ 830 Patent
- ☐ 840 Trademark

SOCIAL SECURITY
- ☐ 861 HIA (1395ff)
- ☐ 862 Black Lung (923)
- ☐ 863 DIWC/DIWW (405(g))
- ☐ 864 SSID Title XVI
- ☐ 865 RSI (405(g))

FEDERAL TAX SUITS
- ☐ 870 Taxes (U.S. Plaintiff or Defendant)
- ☐ 871 IRS—Third Party 26 USC 7609

OTHER STATUTES
- ☐ 400 State Reapportionment
- ☐ 410 Antitrust
- ☐ 430 Banks and Banking
- ☐ 450 Commerce/ICC Rates/etc.
- ☐ 460 Deportation
- ☐ 470 Racketeer Influenced and Corrupt Organizations
- ☐ 810 Selective Service
- ☐ 850 Securities/Commodities/ Exchange
- ☐ 875 Customer Challenge 12 USC 3410
- ☐ 891 Agricultural Acts
- ☐ 892 Economic Stabilization Act
- ☐ 893 Environmental Matters
- ☐ 894 Energy Allocation Act
- ☐ 895 Freedom of Information Act
- ☐ 900 Appeal of Fee Determination Under Equal Access to Justice
- ☐ 950 Constitutionality of State Statutes
- ☐ 890 Other Statutory Actions

V. ORIGIN (PLACE AN "X" IN ONE BOX ONLY)

☒ 1 Original Proceeding ☐ 2 Removed from State Court ☐ 3 Remanded from Appellate Court ☐ 4 Reinstated or Reopened ☐ 5 Transferred from another district (specify) ☐ 6 Multidistrict Litigation ☐ 7 Appeal to District Judge from Magistrate Judgment

VI. CAUSE OF ACTION (Cite the U.S. Civil Statute under which you are filing and write brief statement of cause. Do not cite jurisdictional statutes unless diversity.) Patent declaratory judgment claims (Title 35 U.S. Code) and claims for breach of contract, unfair business practices, etc.

VII. REQUESTED IN COMPLAINT: ☐ CHECK IF THIS IS A CLASS ACTION UNDER F.R.C.P. 23 DEMAND $ Declaratory & monetary relief CHECK YES only if demanded in complaint: JURY DEMAND: ☒ Yes ☐ No

VIII. RELATED CASE(S) IF ANY (See instructions): JUDGE _____ DOCKET NUMBER _____

DATE March 23, 2007 SIGNATURE OF ATTORNEY OF RECORD Steven J. Balick by JLG

FOR OFFICE USE ONLY

RECEIPT # _____ AMOUNT _____ APPLYING IFP _____ JUDGE _____ MAG. JUDGE _____

JS 44 Reverse (Rev. 12/96)

INSTRUCTIONS FOR ATTORNEYS COMPLETING CIVIL COVER SHEET FORM JS-44

Authority For Civil Cover Sheet

The JS-44 civil cover sheet and the information contained herein neither replaces nor supplements the filings and service of pleading or other papers as required by law, except as provided by local rules of court. This form, approved by the Judicial Conference of the United States in September 1974, is required for the use of the Clerk of Court for the purpose of initiating the civil docket sheet. Consequently, a civil cover sheet is submitted to the Clerk of Court for each civil complaint filed. The attorney filing a case should complete the form as follows:

I. **(a) Plaintiffs-Defendants.** Enter names (last, first, middle initial) of plaintiff and defendant. If the plaintiff or defendant is a government agency, use only the full name or standard abbreviations. If the plaintiff or defendant is an official within a government agency, identify first the agency and then the official, giving both name and title.

(b.) County of Residence. For each civil case filed, except U.S. plaintiff cases, enter the name of the county where the first listed plaintiff resides at the time of filing. In U.S. plaintiff cases, enter the name of the county in which the first listed defendant resides at the time of filing. (NOTE: In land condemnation cases, the county of residence of the "defendant" is the location of the tract of land involved.)

(c) Attorneys. Enter the firm name, address, telephone number, and attorney of record. If there are several attorneys, list them on an attachment, noting in this section "(see attachment)".

II. **Jurisdiction.** The basis of jurisdiction is set forth under Rule 8(a), F.R.C.P., which requires that jurisdictions be shown in pleadings. Place an "X" in one of the boxes. If there is more than one basis of jurisdiction, precedence is given in the order shown below.

United States plaintiff. (1) Jurisdiction based on 28 U.S.C. 1345 and 1348. Suits by agencies and officers of the United States, are included here.

United States defendant. (2) When the plaintiff is suing the United States, its officers or agencies, place an "X" in this box.

Federal question. (3) This refers to suits under 28 U.S.C. 1331, where jurisdiction arises under the Constitution of the United States, an amendment to the Constitution, an act of Congress or a treaty of the United States. In cases where the U.S. is a party, the U.S. plaintiff or defendant code takes precedence, and box 1 or 2 should be marked.

Diversity of citizenship. (4) This refers to suits under 28 U.S.C. 1332, where parties are citizens of different states. When Box 4 is checked, the citizenship of the different parties must be checked. (See Section III below; federal question actions take precedence over diversity cases.)

III. **Residence (citizenship) of Principal Parties.** This section of the JS-44 is to be completed if diversity of citizenship was indicated above. Mark this section for each principal party.

IV. **Nature of Suit.** Place an "X" in the appropriate box. If the nature of suit cannot be determined, be sure the cause of action, in Section IV below, is sufficient to enable the deputy clerk or the statistical clerks in the Administrative Office to determine the nature of suit. If the cause fits more than one nature of suit, select the most definitive.

V. **Origin.** Place an "X" in one of the seven boxes.

Original Proceedings. (1) Cases which originate in the United States district courts.

Removed from State Court. (2) Proceedings initiated in state courts may be removed to the district courts under Title 28 U.S.C., Section 1441. When the petition for removal is granted, check this box.

Remanded from Appellate Court. (3) Check this box for cases remanded to the district court for further action. Use the date of remand as the filing date.

Reinstated or Reopened. (4) Check this box for cases reinstated or reopened in the district court. Use the reopening date as the filing date.

Transferred from Another District. (5) For cases transferred under Title 28 U.S.C. Section 1404(a) Do not use this for within district transfers or multidistrict litigation transfers.

Multidistrict Litigation. (6) Check this box when a multidistrict case is transferred into the district under authority of Title 28 U.S.C. Section 1407. When this box is checked, do not check (5) above.

Appeal to District Judge from Magistrate Judgment. (7) Check this box for an appeal from a magistrate judge's decision.

VI. **Cause of Action.** Report the civil statute directly related to the cause of action and give a brief description of the cause.

VII. **Requested in Complaint.** Class Action. Place an "X" in this box if you are filing a class action under Rule 23, F.R.Cv.P.

Demand. In this space enter the dollar amount (in thousands of dollars) being demanded or indicate other demand such as a preliminary injunction.

Jury Demand. Check the appropriate box to indicate whether or not a jury is being demanded.

VIII. **Related Cases.** This section of the JS-44 is used to reference related pending cases if any. If there are related pending cases, insert the docket numbers and the corresponding judge names for such cases.

Date and Attorney Signature. Date and sign the civil cover sheet.

AO FORM 85 RECEIPT (REV. 9/04)

United States District Court for the District of Delaware

Civil Action No. 07-167

ACKNOWLEDGMENT OF RECEIPT FOR AO FORM 85

NOTICE OF AVAILABILITY OF A UNITED STATES MAGISTRATE JUDGE TO EXERCISE JURISDICTION

I HEREBY ACKNOWLEDGE RECEIPT OF 3 COPIES OF AO FORM 85.

MAR 23 2007
(Date forms issued)

Matthew D. Gordon
(Signature of Party or their Representative)

Matthew D. Gordon
(Printed name of Party or their Representative)

Note: Completed receipt will be filed in the Civil Action