IN THE UNITED STATES DISTRICT COURT
FOR THE DISTRICT OF DELAWARE

SAFETY BRAKING CORPORATION, a Delaware corporation, MAGNETAR TECHNOLOGIES CORP., a Nevada corporation, and G&T CONVEYOR CO., a Florida corporation,

Plaintiffs,

v.

SIX FLAGS THEME PARKS INC., a Delaware corporation, TIERCO MARYLAND, INC., a Delaware corporation, GREAT AMERICA LLC, an Illinois company, KKI, LLC, a Delaware company, MAGIC MOUNTAIN LLC, a California company, PARK MANAGEMENT CORP., a California corporation, RIVERSIDE PARK ENTERPRISES, INC., A Mass. corp., SIX FLAGS OVER GEORGIA II, L.P., a Delaware partnership, SIX FLAGS ST. LOUIS LLC, a Missouri company, TEXAS FLAGS, LTD., a Texas partnership, ASTROWORLD, L.P., a Delaware partnership, DARIEN LAKE THEME PARK AND CAMPING RESORT, INC., a New York corporation, ELITCH GARDENS, L.P., a Colorado partnership, BUSCH ENTERTAINMENT CORP., a Delaware corporation, CEDAR FAIR LP, a Delaware limited partnership, PARAMOUNT PARKS, INC., a Delaware corporation, KNOTT'S BERRY FARM, a California partnership, KINGS ISLAND COMPANY, a Delaware corporation, CEDAR FAIR, an Ohio partnership, UNIVERSAL CITY DEVELOPMENT PARTNERS LTD., a Florida limited partnership, UNIVERSAL CITY STUDIOS LLLP, a Delaware partnership,

Defendants.

Civil Action No. 07-127-***

JURY TRIAL DEMANDED

FIRST AMENDED COMPLAINT FOR PATENT INFRINGEMENT

NOW COME the Plaintiffs, Safety Braking Corporation ("Safety Braking"), a Delaware corporation, Magnetar Technologies Corp. ("Magnetar"), a Nevada corporation, and G&T Conveyor Co. ("G&T"), a Florida corporation, by and through their attorneys, Connolly Bove Lodge & Hutz LLP, and hereby complain against the Defendants, stating as follows:

JURISDICTION AND VENUE

1. This Court has jurisdiction over this action pursuant to 28 U.S.C. §§ 1331 and 1338(a).

2. Venue is proper in this District pursuant to 28 U.S.C. §§ 1391(b) and (c) and 28 U.S.C. § 1400(b).

THE PARTIES

Plaintiffs

3. Plaintiff Safety Braking is a Delaware corporation headquartered at 500 Newport Center Drive, 7th Floor, Newport Beach, CA 92660.

4. Plaintiff Magnetar is a Nevada corporation headquartered at 4825 Hazelnut Avenue, Seal Beach, CA 90740.

5. Plaintiff G&T is a Florida corporation with a primary address of 476 Southridge Industrial Drive, Tavares, FL 32778-9118.

Defendants

6. Defendant Six Flags Theme Parks Inc. ("Six Flags Theme Parks") is a Delaware corporation. The Delaware registered agent for Six Flags Theme Parks is Corporation Service Company, 2711 Centerville Road, Suite 400, Wilmington, DE 19808. Six Flags Theme Parks is an amusement park owner and operator in the United States, with parks including Six Flags Great Adventure in Jackson, New Jersey.

7. Tierco Maryland, Inc. ("Tierco") is a Delaware corporation headquartered in Mitchellville, Maryland. The Delaware registered agent for Tierco is The Prentice-Hall Corporation System, Inc., 2711 Centerville Road, Suite 400, Wilmington, DE 19808. Tierco is a subsidiary of Six Flags Theme Parks, and owns and/or operates Six Flags America in Bowie/Mitchellville, Maryland.

8. Great America LLC ("Great America") is a company organized under the laws of the State of Illinois, with principal office at 542 N. Route 21, Gurnee, IL 60031. Upon information and belief, Great America is a subsidiary of Six Flags Theme Parks, and owns and/or operates the theme park Six Flags Great America in Gurnee, Illinois.

9. KKI, LLC ("KKI") is a company organized under the laws of the State of Delaware. The Delaware registered agent for KKI is Corporation Service Company, 2711 Centerville Road Suite 400, Wilmington, DE 19808. KKI is a subsidiary of Six Flags Theme Parks. Upon information and belief, KKI owns and/or operates the theme park Six Flags Kentucky Kingdom.

10. Magic Mountain LLC ("Magic Mountain") is a company organized under the laws of the State of California. Magic Mountain is a subsidiary of Six Flags Theme Parks. Upon information and belief, Magic Mountain owns and/or operates the theme park Six Flags Magic Mountain.

11. Park Management Corp. ("Park Management") is a corporation organized under the laws of the State of California. Park Management is a subsidiary of Six Flags Theme Parks. Upon information and belief, Park Management owns and/or operates the theme park Six Flags Discovery Kingdom.

12. Riverside Park Enterprises, Inc. ("Riverside") is a corporation organized under the laws of the Commonwealth of Massachusetts, with principal address at 1623 Main Street, PO Box 307, Agawam, MA 01001. Riverside is a subsidiary of Six Flags Theme Parks. Upon information and belief, Riverside owns and/or operates the theme park Six Flags New England.

13. Six Flags Over Georgia II, L.P. ("SFOG") is a limited partnership organized under the laws of the State of Delaware. Upon information and belief, SFOG owns and/or operates the theme park Six Flags Over Georgia.

14. Six Flags St. Louis LLC ("SFSL") is a company organized under the laws of the State of Missouri. SFSL is a subsidiary of Six Flags Theme Parks, and upon information and belief owns and/or operates the theme park Six Flags St. Louis.

15. Texas Flags, Ltd. ("Texas Flags") is a limited partnership organized under the laws of the State of Texas. Upon information and belief, Texas Flags owns and/or operates the theme park Six Flags Over Texas.

16. Astroworld, L.P. ("Astroworld") is a partnership organized under the laws of the State of Delaware. Upon information and belief, Astroworld owned and/or operated the theme park Astroworld.

17. Darien Lake Theme Park and Camping Resort, Inc. ("Darien Lake") is a corporation organized under the laws of the State of New York. Upon information and belief, Darien Lake owned and/or operated the theme park Six Flags Darien Lake.

18. Elitch Gardens, L.P. ("Elitch Gardens") is a partnership organized under the laws of the State of Colorado. Upon information and belief, Elitch Gardens owned and/or operated the theme park Six Flags Elitch Gardens.

19. Defendant Busch Entertainment Corp. ("Busch") is a Delaware corporation headquartered in Saint Louis, Missouri. The Delaware registered agent for Busch is The Corporation Trust Company, Corporation Trust Center, 1209 Orange Street, Wilmington, DE 19801. Busch is an amusement park owner and operator in the United States, with parks including Busch Gardens Africa in Tampa Bay, Florida; Busch Gardens Europe in Williamsburg, Virginia; and Sesame Place in Langhorne, Pennsylvania.

20. Defendant Cedar Fair L.P. ("Cedar Fair") is a Delaware limited partnership headquartered at One Cedar Point Drive, Sandusky, Ohio 44870-5259. The Delaware registered agent for Cedar Fair is The Corporation Trust Company, Corporation Trust Center, 1209 Orange Street, Wilmington, DE 19801. Cedar Fair is a publicly traded partnership, and is an amusement park owner and operator in the United States, with parks including Cedar Point in Sandusky, Ohio; Valley Fair in Shakopee, Minnesota; Geauga Lake in Aurora, Ohio; and Worlds of Fun in Kansas City, Missouri. In 2006, Cedar Fair announced that it signed an agreement to acquire Paramount Parks, Inc.

21. Defendant Paramount Parks, Inc. ("Paramount") is a Delaware corporation. The Delaware registered agent for Paramount is The Prentice-Hall Corporation System, Inc., 2711 Centerville Rd., Suite 400, Wilmington, Delaware 19808. Paramount is an amusement park owner and operator in the United States, with parks including Paramount's King's Dominion in Doswell, Virginia; Great America in Santa Clara, California; and Carowinds in Charlotte, North Carolina.

22. Knott's Berry Farm ("Knott's") is a general partnership organized under the laws of the State of California. Upon information and belief, Knott's owns and/or operates the theme park Knott's Berry Farm and/or amusement rides.

23. Kings Island Company ("Kings Island") is a corporation organized under the laws of the State of Delaware. The Delaware registered agent for Kings Island is The Prentice-Hall Corporation System, Inc., 2711 Centerville Rd., Suite 400, Wilmington, Delaware 19808. Upon information and belief, Kings Island owns and/or operates the theme park King's Island and/or amusement rides.

24. Cedar Fair ("CF") is a general partnership organized under the laws of the State of Ohio. Upon information and belief, CF owns and/or operates parks and/or amusement rides.

25. Universal City Development Partners Ltd. ("UCDP") is a limited partnership organized under the laws of the State of Florida. Upon information and belief, UCDP owns and/or operates the theme parks Universal Studios Florida, in Orlando, Florida and Universal Islands of Adventure in Orlando, Florida.

26. Universal City Studios LLLP ("Universal City Studios") is a limited liability limited partnership organized under the laws of the State of Delaware. The Delaware registered agent for Universal City Studios is The Corporation Trust Company, Corporation Trust Center, 1209 Orange Street, Wilmington, Delaware 19801. Upon information and belief, Universal City Studios owns and/or operates the theme park Universal Studios Hollywood in California.

FIRST CLAIM FOR RELIEF
(Infringement of U.S. Patent No. 5,277,125)

27. Plaintiffs repeat and reallege the allegations of paragraphs 1 through 23 as if fully set forth herein.

28. On January 11, 1994, United States Letters Patent No. 5,277,125 ("the '125 patent") (attached hereto as Exhibit "A") was duly and legally issued. The '125 patent is assigned to G&T. Magnetar received an exclusive license under the '125 patent from G&T for

certain fields of use. Safety Braking is now the exclusive licensee under the '125 patent for such fields of use, and has the right to sue for past, present, and future infringement of the '125 patent, and further has the right to seek injunctive relief and monetary damages.

29. Defendants listed above, through ownership and/or operation of various theme parks and amusement rides throughout the United States, are engaged in the manufacture and/or use of amusement rides that infringe the '125 patent, either literally or under the doctrine of equivalents, making Defendants liable for direct and/or indirect infringement under 35 U.S.C. § 271. Such infringing amusement rides include, but are not limited to, roller coasters and/or drop tower rides.

SECOND CLAIM FOR RELIEF
(Infringement of U.S. Patent No. 6,659,237)

30. Plaintiffs repeat and reallege the allegations of paragraphs 1 through 26 as if fully set forth herein.

31. On December 9, 2003, United States Letters Patent No. 6,659,237 ("the '237 patent") (attached hereto as Exhibit "B") was duly and legally issued. The '237 patent is assigned to Magnetar. Safety Braking is the exclusive licensee under the '237 patent, and has the right to sue for past, present, and future infringement of the '237 patent, and further has the right to seek injunctive relief and monetary damages.

32. Defendants Cedar Fair, Paramount, Kings Island, CF, UCDP, and Universal City Studios, through ownership and/or operation of various theme parks and amusement rides throughout the United States, are engaged in the manufacture and/or use of amusement rides that infringe the '237 patent, either literally or under the doctrine of equivalents, making Cedar Fair, Paramount, Kings Island, CF, UCDP, and Universal City Studios liable for direct and/or indirect

infringement under 35 U.S.C. § 271. Such infringing amusement rides include, but are not limited to, roller coasters and/or drop tower rides.

REQUEST FOR RELIEF

Wherefore, Plaintiffs pray that this Court:

A. Find that the '125 and '237 patents have been infringed by the Defendants as alleged herein;

B. Award damages adequate to compensate Plaintiffs for each Defendant's infringements, but not less than a reasonable royalty for the use made of the claimed inventions by each Defendant, together with interest, including pre-judgment interest, and costs as fixed by the Court;

C. Find that each Defendant's infringements have been willful and deliberate;

D. Award Plaintiffs increased damages and attorneys' fees pursuant to 35 U.S.C. §§ 284 and 285 because of the nature of each Defendant's infringements;

E. Permanently enjoin each Defendant and their officers, agents, servants, employees and affiliates, as well as all others in active concert or participation with it as any of the foregoing, from inducing or contributing to the infringement of the '125 and '237 patents; and

F. Award Plaintiffs such other and further relief as this Court may deem just and proper.

DEMAND FOR JURY

Plaintiffs request that all issues triable by a jury be so tried in this case.

/s/ Francis DiGiovanni
Francis DiGiovanni (#3189)

Geoffrey A. Zelley (#4939)
CONNOLLY BOVE LODGE & HUTZ LLP
The Nemours Building
1007 North Orange Street
Wilmington, DE 19899
(302) 658-9141

Scott R. Miller
CONNOLLY BOVE LODGE & HUTZ LLP
355 S. Grand Ave.
Suite 3150
Los Angeles, CA 90071
(213) 787-2500

Attorneys for Plaintiffs

Dated: August 9, 2007

553260_1

CERTIFICATE OF SERVICE

I hereby certify that on August 9, 2007, I caused to be electronically filed a true and correct copy of the foregoing document with the Clerk of the Court using CM/ECF, which will send notification that such filing is available for viewing and downloading to counsel of record on the Court's CM/ECF registrants for this case.

I further certify that on August 9, 2007, I caused a copy of the foregoing document to be served upon the following in the manner indicated:

BY E-MAIL AND HAND DELIVERY

Jack B. Blumenfeld Rodger D. Smith II Morris, Nichols, Arsht & Tunnell, LLP 1201 N. Market Street P.O. Box 1347 Wilmington, DE 19899 jblumenfeld@mnat.com rsmith@mnat.com	Richard L. Horwitz David E. Moore Potter Anderson & Corroon LLP Hercules Plaza, 6th Floor 1313 North Market Street Wilmington, DE 19801 rhorwitz@potteranderson.com dmoore@potteranderson.com

BY E-MAIL

David B. Bassett Amr O. Aly Wilmer Cutler Pickering Hale and Dorr LLP 399 Park Avenue New York, NY 10022 david.bassett@wilmerhale.com amr.aly@wilmerhale.com	William F. Lee James B. Lampert Donald R. Steinberg Wilmer Cutler Pickering Hale and Dorr LLP 60 State Street Boston, MA 02109 william.lee@wilmerhale.com james.lampert@wilmerhale.com don.steinberg@wilmerhale.com
Paul V. Storm Terrell R. Miller Christopher J. Kling Bank of America Plaza 901 Main Street, Suite 7100 Dallas, TX 75202 paulstorm@alliplaw.com terrellmiller@alliplaw.com chriskling@alliplaw.com	

/s/ Francis DiGiovanni
Francis DiGiovanni (#3189)

EXHIBIT A

US005277125A

United States Patent [19]

DiFonso et al.

[11] Patent Number: 5,277,125

[45] Date of Patent: Jan. 11, 1994

[54] **MATERIAL HANDLING CAR AND TRACK ASSEMBLY HAVING OPPOSED MAGNET LINEAR MOTOR DRIVE AND OPPOSED PERMANENT MAGNET BRAKE ASSEMBLY**

[75] Inventors: **Gene DiFonso**, Arlington; **Joel L. Staehs**, DeSoto, both of Tex.

[73] Assignee: **BAE Automated Systems, Inc.**, Carrollton, Tex.

[21] Appl. No.: **967,661**

[22] Filed: **Oct. 28, 1992**

[51] **Int. Cl.**[5] **B60L 13/02**

[52] **U.S. Cl.** **104/292**; 104/294; 188/158; 188/267

[58] **Field of Search** 104/290, 292, 283, 294; 188/267, 158

[56] **References Cited**

U.S. PATENT DOCUMENTS

4,613,805	9/1986	Matsuo et al.	318/687
4,848,242	7/1989	Matsuo	104/290
4,919,054	4/1990	Matsuo	104/94
5,018,928	5/1991	Hartlepp	414/339
5,127,599	7/1992	Veraart	104/292 X

FOREIGN PATENT DOCUMENTS

81105	4/1986	Japan	104/292
177101	8/1986	Japan	104/292
231804	10/1986	Japan	104/292

Primary Examiner—Robert J. Oberleitner
Assistant Examiner—S. Joseph Morano
Attorney, Agent, or Firm—Lorusso & Loud

[57] **ABSTRACT.**

Material handling car and track assembly, the assembly comprising a car having wheels mounted thereon, and a track having two parallel rails, the wheels being adapted to roll on the rails to facilitate movement of the car along the track, a metal slider extending from an underside of the car and lengthwise of the car, and opposed linear motors mounted beween the tracks and spaced from each other to define a gap between the motors, the slider being daapted to pass through the gap, the motors being operative to act on the slider to impart thrust to the car, the motors being oriented such as to substantially eliminate magnetic atraction between the mtors and the car. The invention further contemplates opposied magents mountede beween the tracks and spaced from each other to define a gap between the magnets, the slider being dapted to pass through the gap between the magnets, the magnets being operative to act on the slider to impart braking to the car, whereby to decelerate the car.

3 Claims, 3 Drawing Sheets

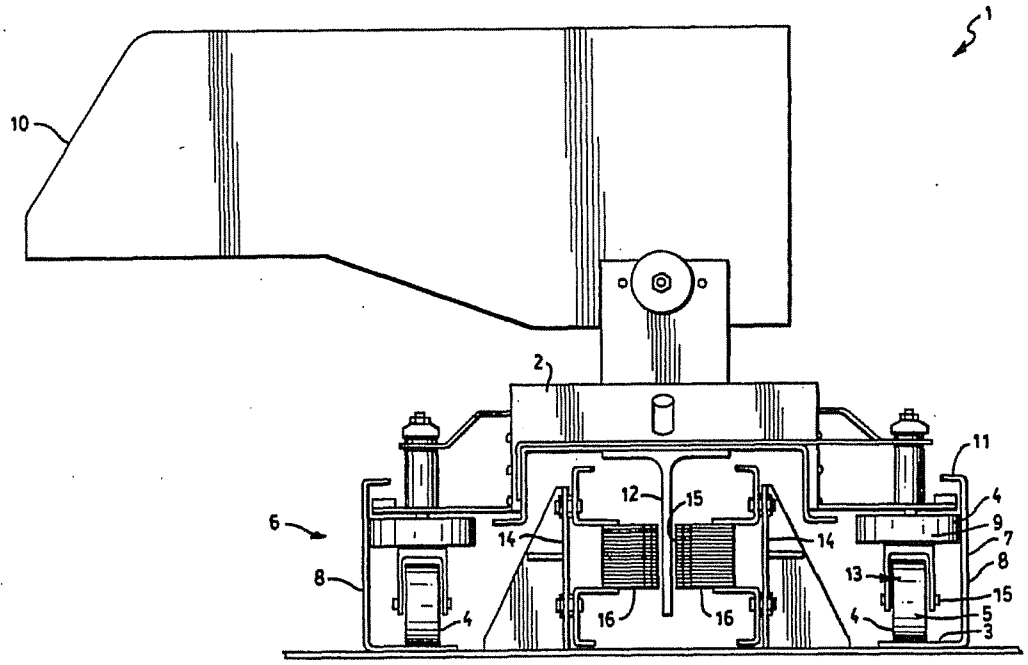

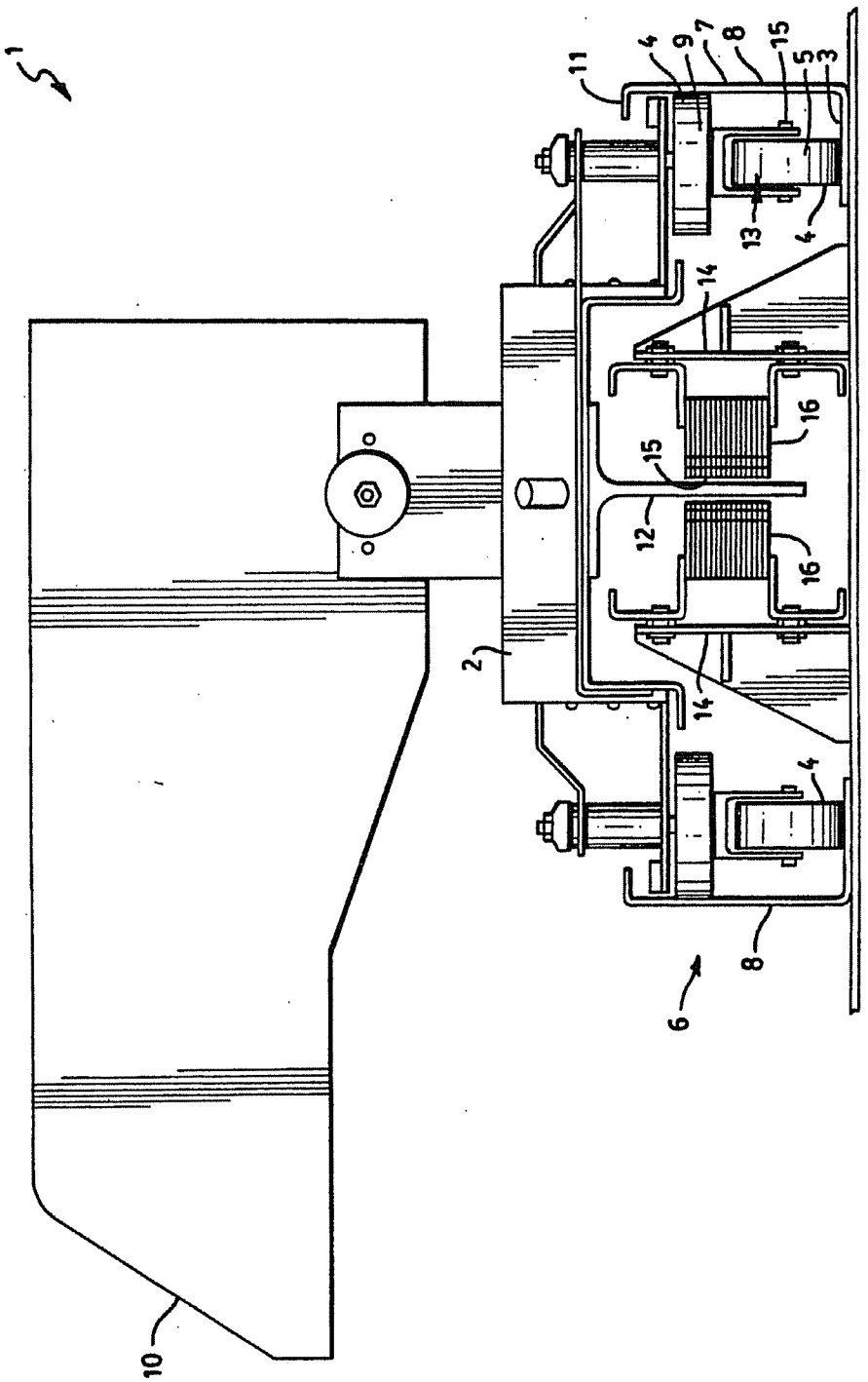

FIG. 1

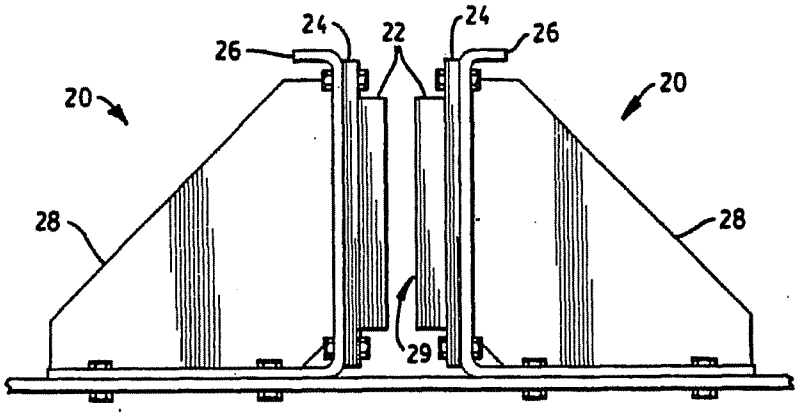

FIG. 2A

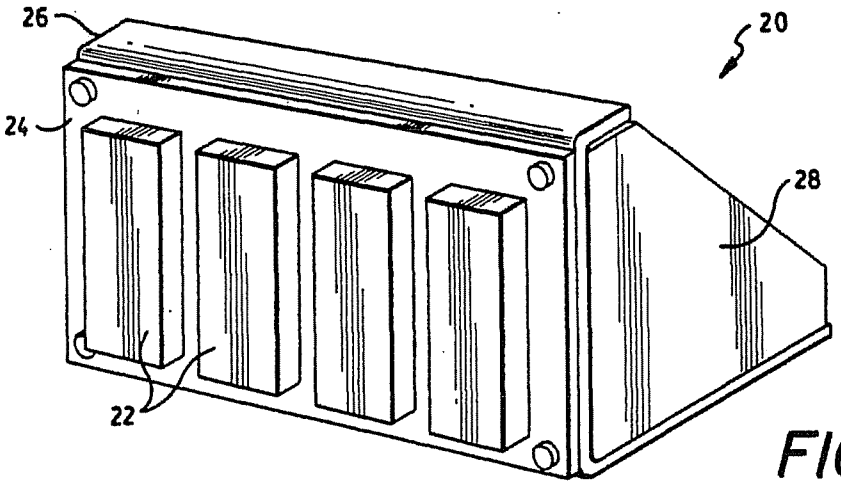

FIG. 2B

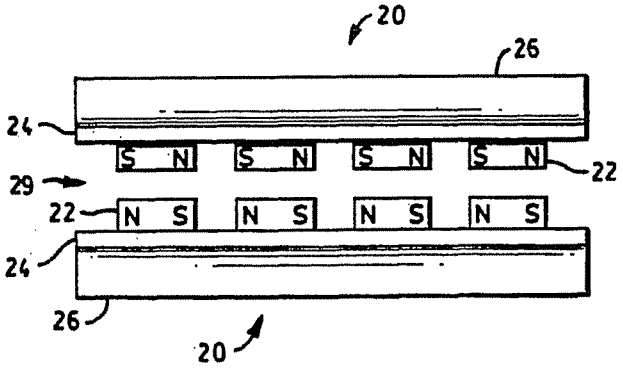

FIG. 2C

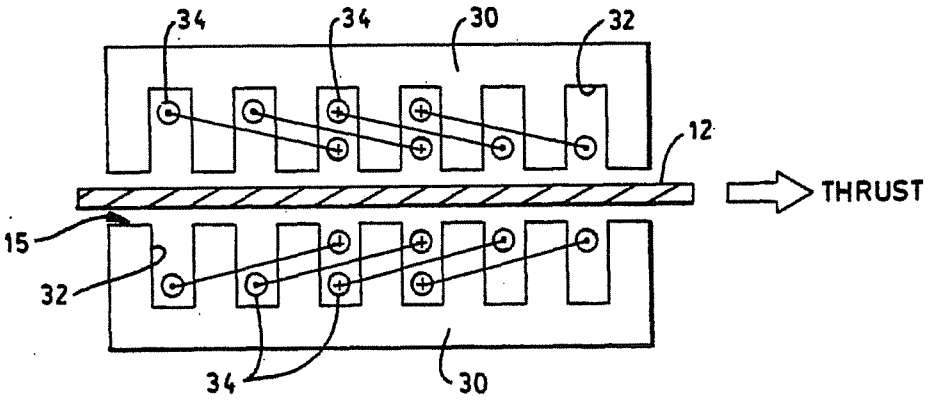

FIG. 3

MATERIAL HANDLING CAR AND TRACK ASSEMBLY HAVING OPPOSED MAGNET LINEAR MOTOR DRIVE AND OPPOSED PERMANENT MAGNET BRAKE ASSEMBLY

BACKGROUND OF THE INVENTION

1. Field of the Invention

The present fnvention relates to a material handling car and track assembly and is directed more particularly to acceleration and deceleration means mounted in the track assembly and adapted to influence speed of the car.

2. Description of Prior Art

The prior ar has recognized the need for means to propel a car along a track without the installation of a driver mechanism or braking mechanism on the car. Systems have incorporated linear induction motors as an efficient means of achieving this. Such systems commonly employ single motors along a track whereby a car is propelled by a force created by the change in magnetic flux as the car passes by the motors. However, a problem inherent in these systems is that of undue stress on the cars and tracks themselves due to an electromagnetic force created between the car and the motor, causing the car to be attracted toward the track. This attractive force exerted on the car dissipates after the car passes away from the motor. In systems where there are commonly several hundred motors in use through which a car passes as it travels through the system, the constant attractive stress and release of such stress, leads to wear and tear on the car. As a result, cars break down and are in need of frequent repair.

Such a system is disclosed in U.S. Pat. No. 4,919,054 to Matsuo. In this system, linear induction motors are disposed in single file underneath the transport path of the car, causing the motors to exert an attractive force while acting to drive the car. Due to numerous motors in the system, a car undergoing such repeated application and release of stress becomes structurally weak and requires frequent servicing.

Another problem recognized in the prior art relates to providing a means for controlling the speed of a car through the use of a decelerating mechanism external of the car. Many systems which have employed inductive motors to impel a car forward along a track have relied entirely upon the same motors for braking the car. A reverse thrust is applied to the car by passing reverse phase alternating current through the coils of the motor stators, to slow the car down. However, these systems potentially overwork the motors which often leads to motor failure.

An example of this type of system is disclosed in U.S. Pat. No. 4,848,242 to Matsuo. As in the Matsuo '054 system, single motors are disposed at predetermined intervals underneath the transport path and, as in the previous system, an attractive force on the car is exerted and released as the car moves in the direction of the transport path. The motors impel the car in the forward and reverse directions. Thus, the motors carry out the function of starting and stopping the car, depending on the direction of current flow. However, this dual function leads to increased wear and tear on the motors.

In other systems, such as disclosed in U.S. Pat. No. 5,018,928 to Hartlepp, a car is decelerated through the use of a magnetic piston which moves by compressed air in a tube, such that a car will follow the piston. However, the use of such a structure is complicated and thus provides great opportunity for malfunction. Additionally, this system discloses the use of linear induction motors for propelling a car on a track wherein induction motors are singly disposed. Accordingly, an attractive force is exerted on the cars driven by the motor.

An additional problem recognized in the art is the need to mitigate the effects of motor failure. In U.S. Pat. No. 4,613,805 to Matsuo, there is disclosed a system providing for continued operation through the use of an auxiliary power source in the event that the main power source becomes disabled. However, this system does not insure continued operation in the event that a motor along the transport path should become disabled.

SUMMARY OF THE INVENTION

Accordingly, it is an object of the invention to provide a material handling car and track assembly which reduces wear and tear on cars traveling through the system and provides for continued operation in the event that a motor, or several motors, in the system become disabled. This object is accomplished by provision of a car having a metal slider on the underside of the car. The assembly further includes a track having two parallel rails. Movement is imparted to a car traveling on the rails by opposed linear motors operatively acting on the slider. The configuration of the motors is such that it causes the magnetic attraction between the linear motors and the car to substantially cancel out, thereby eliminating the attractive force on the car. Thus the cars, no longer subject to application and release of stresses, require less reparative maintenance and enjoy longer operating life. Additionally, through the use of coupled motors, should one motor become disabled, the remaining motor continues to impart motion until the afflicted motor is again operative.

A further object of the invention is to provide a simple means for decelerating the car without the use of mechanisms disposed on the car. The use of magnets disposed along the track enables the car's traveling speed to be decreased, the magnets operatively acting on the slider to decelerate the car.

With the above and other objects in view, as will herein after appear, a feature of the present invention is the provision of a material handling car and track assembly, the assembly comprising a car having wheels mounted thereon, and a track having two parallel rails, the wheels being adapted to roll on the rails to facilitate movement of the car along the track, a metal slider extending from an underside of the car and lengthwise of the car, and opposed linear motors mounted between the tracks, the motors being spaced from each other by a distance exceeding the thickness of the slider to define a gap between the motors, the slider being adapted to pass through the gap in travel of the car over the motors, the motors being operative to act on the slider to impart thrust to the car, the motors being oriented such as to substantially eliminate magnetic attraction between the motors and the car.

In accordance with a further feature of the invention, there is provided a material handling car and track assembly, the assembly comprising a car having wheels mounted thereon, and a track having two parallel rails, the wheels being adapted to roll on the rails to facilitate movement of the car along the track, a metal slider extending from an underside of the car and lengthwise of the car, and exposed magnets mounted between the tracks, the magnets being spaced from each other by a

distance exceeding the thickness of the slider to define a gap between the magnets, the slider being adapted to pass through the gap in travel of the car over the magnets, the magnets being operative to act on the slider to impart braking to the car, whereby the magnets are operative to decelerate the car.

The above and other features of the invention, including various novel details of construction and combinations of parts, will now be more particularly described with reference to the accompanying drawings and pointed out in the claims. It will be understood that the particular devices embodying the invention are shown by way of illustration only and not as limitations of the invention. The principles and features of this invention may be employed in various and numerous embodiments without departing from the scope of the invention.

BRIEF DESCRIPTION OF THE DRAWINGS

Reference is made to the accompanying drawings in which are shown illustrative embodiments of the invention, from which its novel features and advantages will be apparent.

In the accompanying drawings:

FIG. **1** is a front elevational view of one form of material handling car and track assembly illustrative of an embodiment of the invention, wherein the material handling car is shown having a metal slider on an underside portion of the car, and the track assembly is shown with linear induction motors in opposition, forming a gap therebetween to accommodate the passage of the slider;

FIG. **2A** is a front elevational view of a decelerating means featuring decelerating magnets arranged in opposition and forming a gap therebetween adapted to accommodate the passage of the slider;

FIG. **2B** is a perspective view of a portion of the decelerating means of FIG. **2A**;

FIG. **2C** is a top view of a portion of the decelerating means of FIG. **2A**, showing the polar arrangement of magnets therein; and

FIG. **3** is a diagrammatic view of two opposed linear motors.

DESCRIPTION OF THE PREFERRED EMBODIMENTS

Referring to FIG. **1**, it will be seen that the illustrative assembly includes a car **1** having a chassis **2** on which are mounted travel wheels **4** to facilitate movement along a track assembly **6**, which comprises two parallel rails **8**.

Each of the rails **8** is of a U-shaped configuration and, as shown in FIG. **1**, are opposed to each otherl Each of the U-shaped rails includes a substnatially horizontal bottom plae **3**, for supporting a vertical travel wheel **5** of the car **1**, and a substnatially ertical wall **7** for engagin a horizonal tavel wheel **9** of car **1**, and a top wall **11** overlyin the bottom plate **3** and extending iwnardly from eside wall **7**. Mounted on the chassis **2** is a tiltable tray **10** which is sized to accommodate a selected cargo, such as, for example, heavy, large or cumbersome baggage. The tray **10** is capable of being positioned in three positions, one in which it is adapted to receive material from a loading station, another in which it permits transport of material around curves in the track without spillage of material, and lastly, a third position in which it facilitates sliding of the material off the tray **10** onto a receiving platform.

On the underside of the chassis **2**, a slider **12** is mounted which runs lengthwise along the chassis **2**. The slider **12** comprises a fin which is preferably fabricated of an all-conductor, such as aluminum or copper. Other all-conductive materials are within the scope of the preferable materials, provided that such materials are non-magnetic. The use of such materials reduces the overall weight of the car so that it is 25% to 30% less than existing prior art cars which do not employ such materials. The slider **12** is preferably 0.25 inch thick and in one embodiment is **48** inches long.

Also shown in FIG. **1** is a track assembly with linear induction motors **16** disposed in opposition. Brackets **14** are disposed inwardly of the rails **8**, and are adapted to retain the linear induction motors **16** such that the motors **16** form a gap **15** sized to be greater than the width of the slider **12**. The two brackets **14** each hold a linear induction motor **16** in such an orientation that the motors extend to form the narrow gap **15** therebetween.

The linear induction motors **16** each include a stator assembly **30** (FIG. **3**) having slots **32** therein. Within each stator assembly **30**, there are disposed multiple phase windings **34**. The windings **34** are disposed in the slots **32** so as to form a distributed winding pattern. When excited by a multiple phase alternating current source (not shown), the windings **34** generate a traveling magnetic wave defined by

$$b = B\cos\frac{(\pi S)}{p}$$

where

B=peak value of magnetic flux density in air gap

S=lengthwise distance of stator gap

p=pole pitch of stator

Inasmuch as the conductive slider **12** consists entirely of non-magnetic material, no force is produced tending to pull the slider sideways.

Because of magnetic induction action between the air gap magnetic flux wave and the slider, there occurs a flow of eddy currents defined by

$$j = J\sin\frac{(\pi S)}{p}$$

where

J=peak value of eddy current flow in the slider.

Interaction between the air gap flux wave and resulting eddy currents induced on the slider, produces thrust in the direction orthogonal to both flux and eddy current waves. The coil polarities are reversed from one stator assembly to the opposing stator assembly across the gap **15**. As a result of this configuration, the attractive force created by single non-opposed stators is eliminated.

Referring to FIG. **1**, it will be seen th the motors **16** are on about the same level above the botom plates **3** as are the horizontal travel wheels **9** and portions **13** of the ertical travel wheels **5** above their axes **15**, when h car passes over the motors. Thus, as is paparent from FIG. **1**, the driving force imparted to the slider **12** by the motors **16** is on about the same level as the horizontal wheels and the portion of the vertical wheels above the vertical wheel axes. Thus, there is produced subsntially only a forward thrust, without a turning moment imparted to the travel wheels tending to lift the wheels off the track.

In operation, the motors may be run continuously or may be provided with selective turn-off switches, such that one or more groups of motors may be turned off during periods of inactivity. Alternatively, a "presence control" may be utilized wherein the approach of a car is sensed and the motors turned on and, as the departure of the car from the scene is sensed, the motors turned off. A second alternative comprises a "speed control" wherein the speed of an approaching car is sensed and the motors are activated or deactivated in accordance with a preset desired speed for the car.

In FIG. 2A, there are shown decelerating magnetic members **20**. Individual magnets **22** are each bonded to a steel plate **24** for support. The steel plates **24** are each attached to a mounting bracket **26**. Steel gussets **28** (FIGS. 2A and 2B), each about 0.25 inch thick, are mounted across an inner angle of the mounting brackets **26**, to provide support for the brackets **26**. The magnetic members **20** are positioned between the rails **8** so as to form a gap **29**, the width of which is greater than the width of the slider **12**.

FIG. 2B shows the inner face of one of the identical opposed magnets and the positioning of the individual magnets **22**. A selected number of magnets, depending upon the weight and desired velocity of the vehicle, are placed on each of the steel plates **24**. FIG. 2C shows the magnets **22** and the polar orientation thereof. Thus, when the slider **12** passes between the magnetic members **20**, as the car **1** travels along the tracks, the magnetic field created by the opposed polar orientation of individual magnets **22**, serves to decelerate the car **1**.

On the track assembly, the magnetic members **20** and the induction motors **16** are disposed in certain places where it is desirable that the speed of the car be either slowed or maintained. For example, in areas of an incline where it is likely that car speed will decrease, the induction motors may be disposed to maintain an appropriate speed. There are places along the track assembly where it is desirable that the speed of the car be decreased, such as in areas of sharp turns. It is in such areas that the magnetic members may be disposed to slow the car. Additionally, in areas where baggage is to be loaded onto and off of the tray of the car, magnetic members are disposed. Also, in areas where the tray has finished loading or unloading of baggage, induction motors may be positioned, so as to move the car along the track system and return the car to travel speed.

The motors may be reversed by merely reversing the direction of the traveling magnetic wave. This is accomplished by changing the phase rotation of the multiple phase power source, to provide a braking force on the cars. While it is preferable not to rely wholly on the motors for routine braking, use of the motors for braking over and beyond that provided by the magnetic members **20** is available.

It should be understood that the invention is not limited to the specific embodiment or construction described above and that various changes and modifications will be obvious to one skilled in the art without departing from the true spirit and scope of the invention as defined in the appended claims.

What is claimed is:

1. A track assembly for driving a material handling car, said asembly comprisin:

two parallel rails upon which said car is driven, each of said rails havign a U-shaped configuration, said rails being in opposed position, each of said rails having a subsntaially horizontal bottom plate for supporting a vertical travel wheel of said car, a substantially vertical side all for engaging a horizonal travel wheel of said car, and a top wall overlying said bottom plate and extending iwnardly from said side wall

linear induction motors mounted between said rails in an opposed configguration, said motors being on about the same level above said rail bottomplates as said horizontal travel wheel and portions of said vertical tarvel wheels above the axes thereof when said car passes over said motors, said opposed configuration defining a gap beween said motors permiting passage of a slider portion of said car therebetween, said configuration creating a driving force for impellin said car along said rails while causing cancellation of atractive forces exerted by seach of said induction motors respectively, such that said slider upon passage through said gap is subject only to said driving forcek said driving force being exerted by said motors at said level above said rail bottom plates so as to provide said driving force at said level of said horizontal travel wheels and said portions of said vertical travel wheels above said axes thereof, and

permanent magnets mounted between said rails at a point removed from said motors, said magnets being mounted in an opposed configuration defining a gap between said magnets which permits the passage of said slider therbetween, said magnets being adapted to exercise a braking force on said slider to decrease the speed of said car upon passage of said slider therebetween.

2. A material handling car and track assembly, said assembly comprising

a car having wheels mounted thereon, and a track having two parallel rails, said wheel being adapted to rolll on said rails to faciliate movement of said car along said track, a metal fin extending from an underside of said car and lengthwise of said car, said fin exending from said car between said wheels and

opposed linear motors mounted between said tracks, said motors being spaced from each other by a distance exceeding the thickness of said fin to define a gap between said motors, said fin being adapted to pass through said gap in travel of said car over said motors said motors being oriented such as to substanatially eliminate magentic attraction between said motors and said car, and said motors bieng disposed between said wheels when said car passes over said motors, said moors being disposed at a level above bottom plates of said track rails and genraly equal to the level of portions of said wheels above said bottom plates and above the axes of said wheels when said car passes over said motors, and

opposed permanent mgents mounted between said tracks at a point removed from said motors, said magnets being spaced from each other by a distance exceedig the thickness of said fin to define a gap between said magnets, said fin being adapted to pass through said gap between said magnets in travel of said car over said magnets, said magnets being disposed on plates mounted between said tracks, said magnets being mounted side by side in a direction of travel of said car, said magnets being operative sequentially to act on said fin to impart braking to said car, whereby said motors are opera-

tive to accelerate said car and said magnets are operative to decelerate said car.

3. Material handling car and track assembly, said assembly comprising:

a car having wheels mounted thereon, and

a track having two parallel rails, said wheel being adapted to roll on said rails to facilitate movement of said car along said track,

a metal fin extending from an underside of said car and lengthwise of said car, and

opposed magnet assemblies mounted between said tracks, said opposed assemblies being spaced from each other by a distance exceeding the thickness of said fin to define a gap between said magnet asemblies, said fin being adapted to pass through said gap in travel of said car over said magnets, each of said assemble is comprising a mounting bracket, a plate attached to said mounting bracket, and a series of magnets bonded to said plate, said magnets on said plate being disposed side by side in a direction of travel of said car on said rails, said magnets being operative sequentially to act on said fin to impart braking to said car.

* * * * *

UNITED STATES PATENT AND TRADEMARK OFFICE

CERTIFICATE OF CO CTION

PATENT NO. : 5,277,125

DATED : January 11, 1994

INVENTOR(S) : Gene DiFonso, Joel L. Staehs

It is certified that error appears in the above-indentified patent and that said Letters Patent is hereby corrected as shown below:

In the Abstract:

Line 9: "daapted" should read "adapted"
Line 13: "mtors" should read "motors"
Line 14: "opposied" should read "opposed"
"magents" should read "magnets"
"mountede" should read "mounted"
Line 16: "dapted" should read "adapted"

Column 1: line 9; "fnvention" should read "invention"
Column 1: line 15; "ar" should read "art"

Column 3: line 53; "1" should read "."
line 54; "substnatially" should read —substantially—
line 55; "plae" should read —plate—
line 56; "substantially ertical" should read —substantially vertical"
line 56; "engagin" should read "engaging"
line 57; "tavel" should read "travel"
line 58; "overlyin" should read "overlying"
line 59; "eside" should read "the side"
Column 4: line 11; "48" should not be in bold
line 57; "th" should read "that"
line 58; "botom" should read "bottom"
line 60; "ertical" should read "vertical"
line 60; "h" should read "the"
line 61; "paperent" should read "apparent"
line 65; "substntially" should read "substantially"
Column 5: line 64; "asembly comprisin" should read "assembly comprising"
line 66; "havign" should read "having"
line 68; "substntaially" should read "substantially"

UNITED STATES PATENT AND TRADEMARK OFFICE

CERTIFICATE OF CORRECTION

PATENT NO. : 5,277,125 Page 2 of 2

DATED : January 11, 1994

INVENTOR(S) : Gene DiFonso, Joel L. Staehs

It is certified that error appears in the above-indentified patent and that said Letters Patent is hereby corrected as shown below:

Column 6: line 2; "all" should read "wall"
line 4; "iwnardly" should read "inwardly"
line 5; after "wall" please insert ","
line 7; "configguarion" should read "configeration"
line 10; "tarvel" should read "travel"
line 15; "impellin" should read "impelling"
line 16; "atractive" should read "attractive"
line 17; "seach" should read "each"
line 19; "forcek" should read "force"
line 29; "therbetween" should read "therebetween"

line 37; "rolll" should read "roll"
line 40; "exending" should read "extending"
line 47; after "said motors" please insert a comma ","
line 48; "substanatially" should read "substantially"
line 50; "bieng" should read "being"
line 53; "genraly" should read "generally"
line 57; "mgents" should read "magnets"
line 60; "exceedig" should read "exceeding"
Column 7: line 6; "wheel" should read "wheels"
Cloumn 8: line 2; "asem-" should read "assem-"

Signed and Sealed this

Eleventh Day of April, 1995

Attest:

BRUCE LEHMAN

Attesting Officer *Commissioner of Patents and Trademarks*

UNITED STATES PATENT AND TRADEMARK OFFICE

CERTIFICATE OF CORRECTION

PATENT NO. : 5,277,125
APPLICATION NO. : 07/967661
DATED : January 11, 1994
INVENTOR(S) : DiFonso et al.

It is certified that error appears in the above-identified patent and that said Letters Patent is hereby corrected as shown below:

On the Title Page: Item (75), Inventors, "Gene DiFonso, Arlington; Joel L. Staehs, DeSoto, both of Tex." should read -- Gene DiFonso, Arlington; Joel L. Staehs, DeSoto; William C. Bortzfield *(deceased)*, Grand Prairie, all of Tex.--.

In the claims column 8, line 6, "assemble is" should read -- assemblies --.



Signed and Sealed this

Tenth Day of April, 2007



JON W. DUDAS
Director of the United States Patent and Trademark Office

EXHIBIT B

US006659237B1

(12) **United States Patent**
Pribonic

(10) **Patent No.: US 6,659,237 B1**
(45) **Date of Patent: Dec. 9, 2003**

(54) **EDDY CURRENT BRAKE**

(75) Inventor: **Edward M. Pribonic**, Seal Beach, CA (US)

(73) Assignee: **Magnetar Technologies, Ltd.**, Seal Beach, CA (US)

(*) Notice: Subject to any disclaimer, the term of this patent is extended or adjusted under 35 U.S.C. 154(b) by 53 days.

(21) Appl. No.: **09/880,353**

(22) Filed: **Jun. 13, 2001**

Related U.S. Application Data

(63) Continuation-in-part of application No. 09/447,206, filed on Nov. 22, 1999.

(51) **Int. Cl.**[7] **B60L 7/28**
(52) **U.S. Cl.** **188/165**; 108/180
(58) **Field of Search** 188/159, 161, 188/164, 165, 180, 41, 84; 104/250

(56) **References Cited**

U.S. PATENT DOCUMENTS

4,301,623	A *	11/1981	Demukai	16/78
5,127,599	A *	7/1992	Veraart	104/292
5,195,618	A *	3/1993	Wu	188/164
5,277,125	A *	1/1994	DiFonso et al.	104/292
5,465,815	A *	11/1995	Ikegami	188/164
6,062,350	A *	5/2000	Spieldiener et al.	188/161
6,227,334	B1 *	5/2001	Yumura et al.	187/359
6,293,376	B1 *	9/2001	Pribonic	187/350
6,361,268	B1 *	3/2002	Pelrine et al.	104/284
6,412,611	B1 *	7/2002	Pribonic	187/375

FOREIGN PATENT DOCUMENTS

WO	WO 96/32172	* 10/1996

* cited by examiner

Primary Examiner—Jack Lavinder
Assistant Examiner—Bradley King
(74) *Attorney, Agent, or Firm*—Walter A. Hackler

(57) **ABSTRACT**

An eddy current brake includes a diamagnetic member, a first support wall and a second support wall with the first and second linear arrays of permanent magnets disposed on the walls facing one another. Apparatus is provided for moving at least one of the walls in order to control eddy current induced in the member in the passage of the member therepast to adjust the braking force between the magnets and the member. Apparatus is also provided for causing the velocity of the member to change the braking force between the magnets and the member.

10 Claims, 4 Drawing Sheets

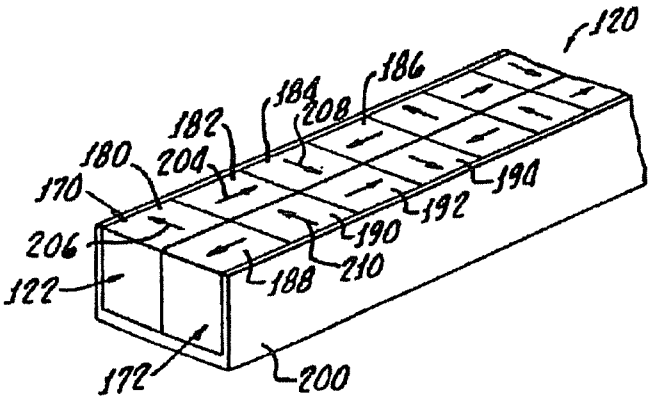

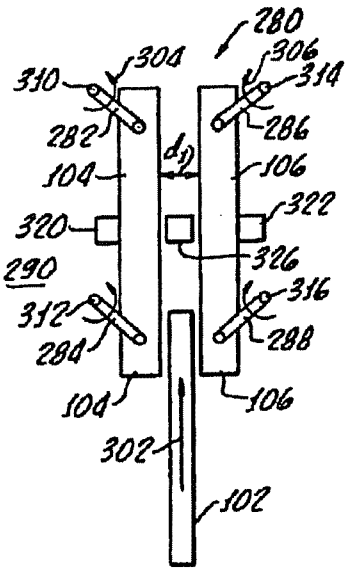

FIG. 1.

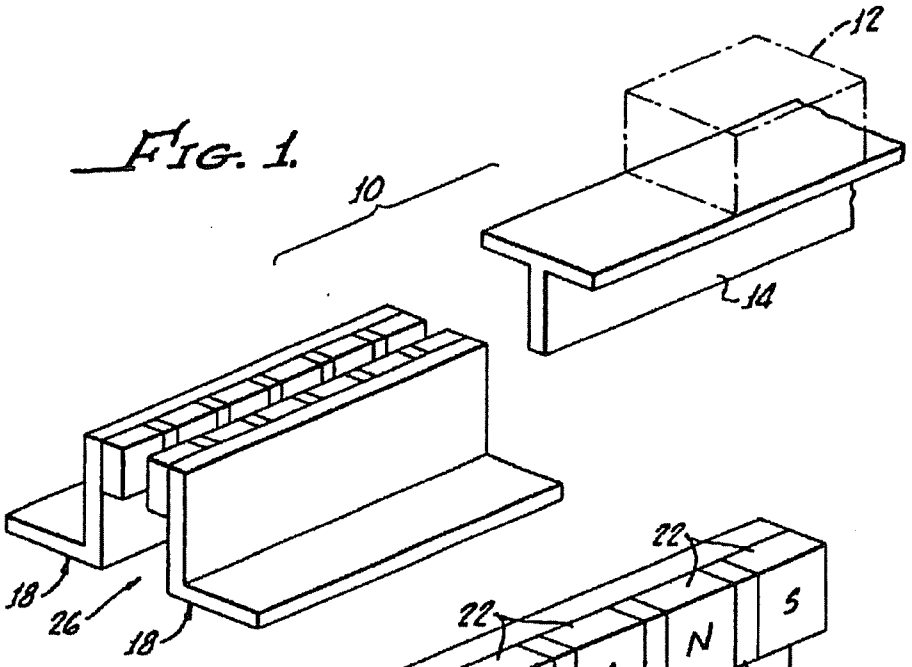

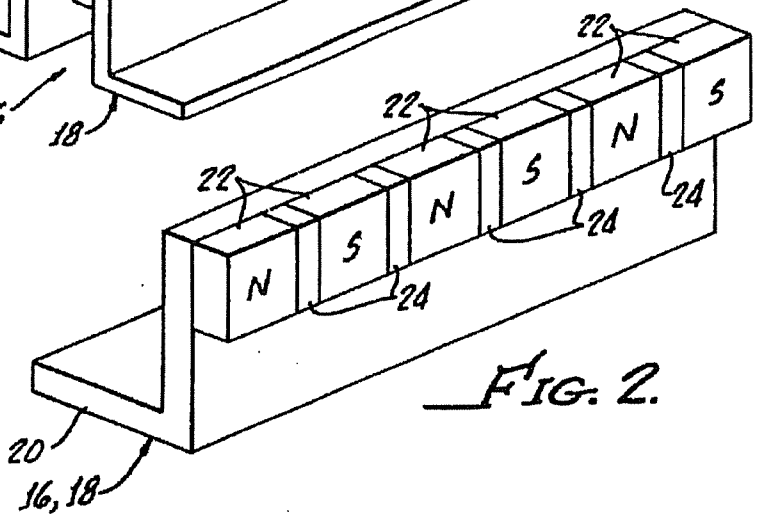

FIG. 2.

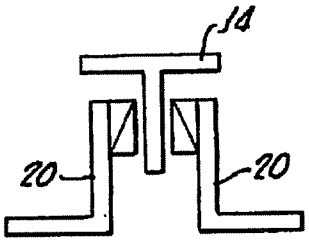

FIG. 3.

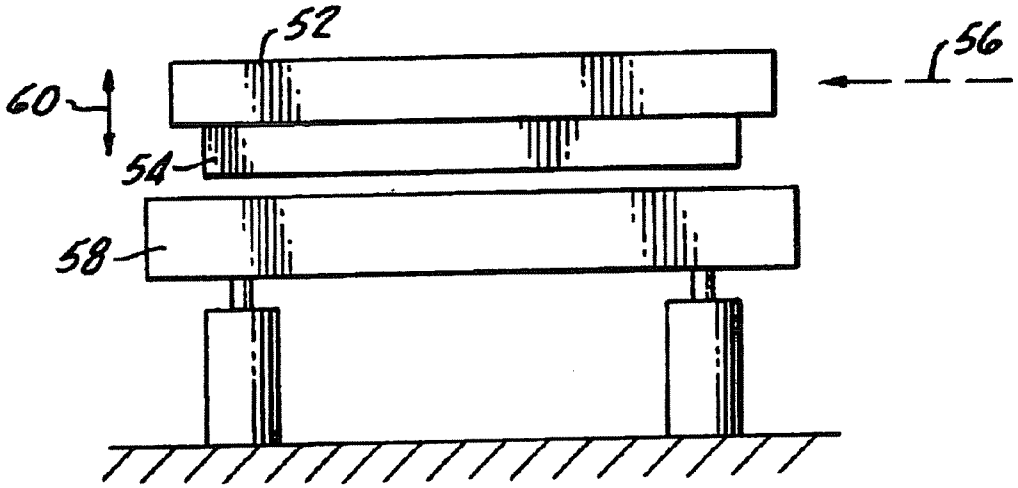

FIG. 4.

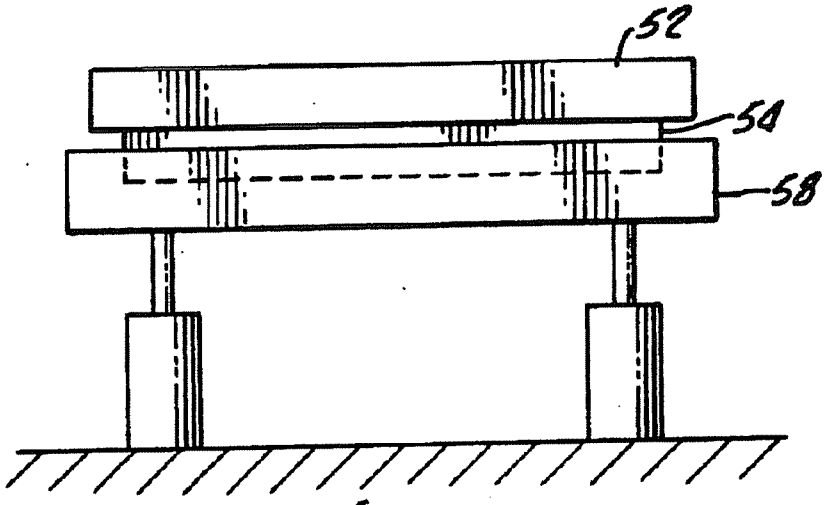

FIG. 5.

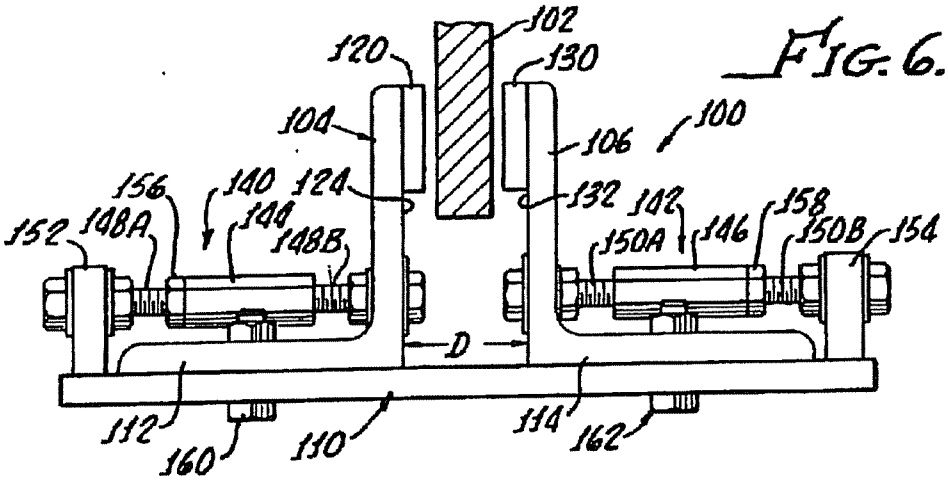

FIG. 6.

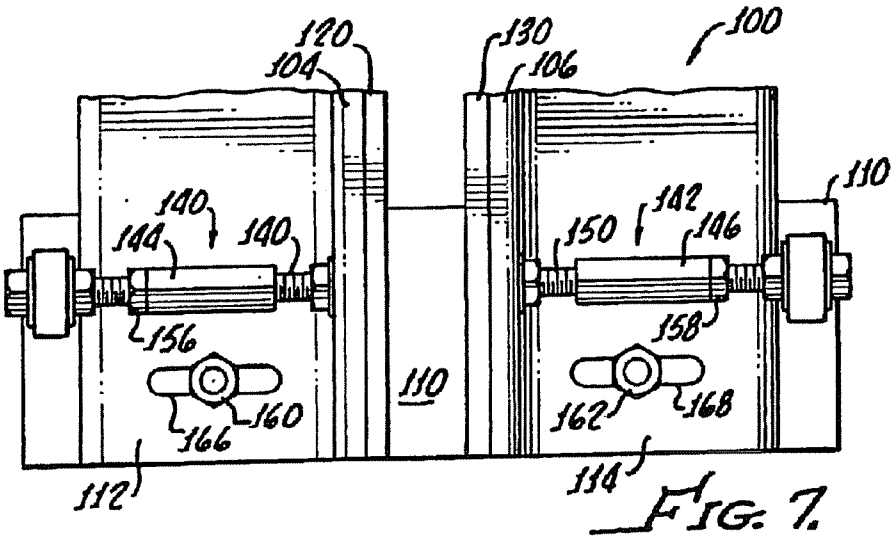

FIG. 7.

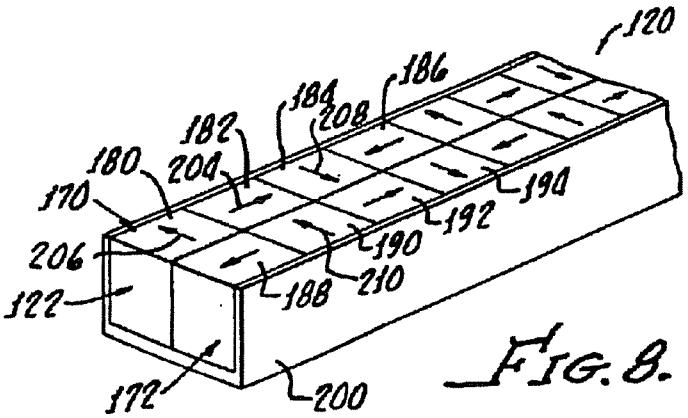

FIG. 8.

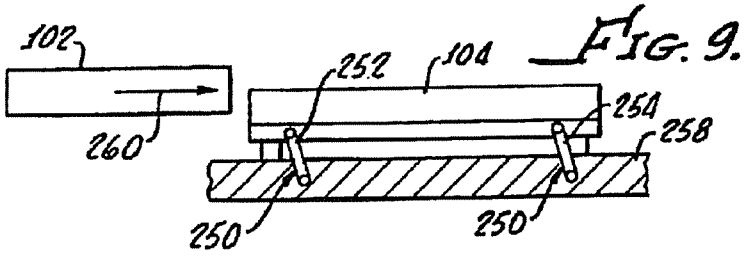

FIG. 9.

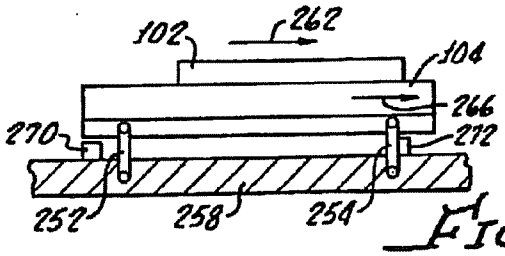

FIG. 10.

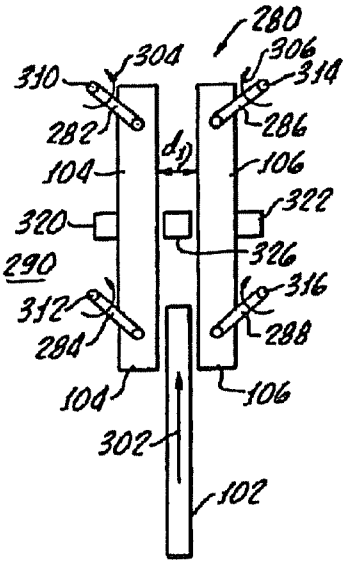

FIG. 11.

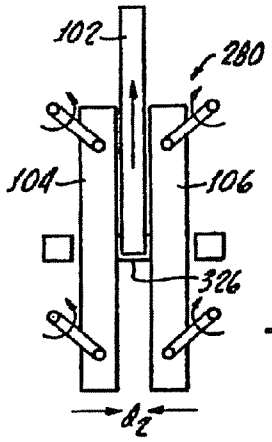

FIG. 12.

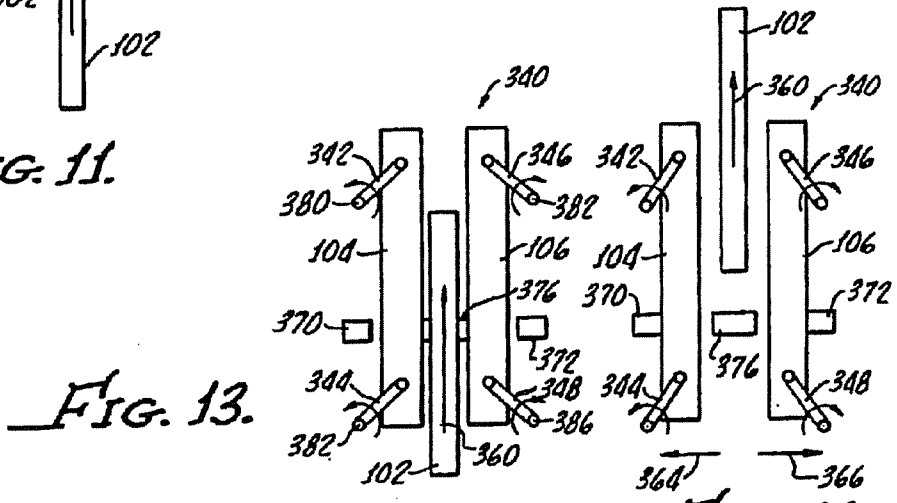

FIG. 13.

FIG. 14.

EDDY CURRENT BRAKE

The present application, is a continuation-in-part of U.S. patent application Ser. No. 09/447,206 filed Nov. 22, 1999.

The present invention is generally related to permanent magnet linear brakes and is more particularly directed to an eddy current brake and magnet system for providing adjustable braking for movable cars, for example, rail support cars, go cars, elevator cars, conveyer car, roller coaster cars among other.

Heretofore, eddy current braking system for providing deceleration of moving apparatus have utilized physically fixed magnets which provided no opportunity to adjust braking before or during passage of a diamagnetic member past a linear array of permanent magnets.

Accordingly, such prior art systems, when installed for decelerating a plurality of cars on a track, can not accommodate for variations in car weight and size.

The present invention provides for a unique permanent array arrangement and apparatus for adjusting braking force before and/or during passage of a car past a selected point.

SUMMARY OF THE INVENTION

An eddy current brake in accordance with the present invention generally includes a diamagnetic or non-magnetic member, a first support wall and a separate second support wall disposed in a spaced apart relationship with the first support wall for enabling the member to pass therebetween.

A first linear array of permanent magnets is disposed on the first wall on the side facing the second wall and a second linear array of permanent magnets is disposed on the second wall on the side facing the first wall. The first and second arrays are parallel with one another and spaced apart from one another for allowing passage of the member therebetween and causing eddy current to be induced in the member which results in the braking force between the magnets and the member. No magnetic connection, such as a yoke, is required between the walls or the arrays of permanent magnets. This feature enables adjustability of the distance between the member and the magnet arrays.

In accordance with the present invention, apparatus is provided for moving a least one of the first and second walls in order to control eddy current induced in the member during the passage of the member therepast in order to adjust braking force between the magnets and the member. In one embodiment of the present invention, the apparatus includes means for moving at least one of the first and second walls in a direction perpendicular to the member, and in another embodiment of the present invention, the apparatus includes means for moving at least one of the first and second walls in a direction parallel to the member.

Thus, it can be seen that the apparatus in accordance with the present: invention provides for changing the spaced apart relationship between the first and second walls in order to control eddy current induced in the member during passage and adjust a braking force between the magnets and member.

Accordingly, the amount of deceleration provided to a given car may be adjusted in accordance with the present invention. In addition, cars of various sizes and weights may be utilized and the eddy current magnetic brake in accordance with the present invention adjusted to provide the proper, or desired, deceleration. In one embodiment to the present invention, apparatus is provided for adjusting the eddy current induced in the member, and the braking force, as a function of velocity of the member between the arrays. Thus, cars having various velocities upon passing the brake,

can be decelerated to a more uniform velocity exiting the brake in accordance with the present invention.

In this embodiment of the brake, the apparatus for adjusting eddy current includes a linkage mounting at least one of the first and second walls to a fixed foundation for enabling movement of the member therepast to change a distance between at least one of the first and second walls and the member. More particularly, the linkage may provide for changing a spaced apart relationship between the first and second walls.

An embodiment of the present invention includes linkage for enabling movement of the member to change a transverse relationship between at least one of the first and second walls of the member and another embodiment provides linkage for enabling movement of the member to change a parallel relationship between the first and second walls and the member.

Magnetic coupling and inducement of eddy current is effective through a linear array of permanent magnets which includes a channel and plurality of magnets disposed therein. The magnets may be arranged within the channel in two adjacent rows with each magnet in each row being arranged with a magnetic field at a 90° angle to adjacent magnets in each row along the channel. Each magnet in each row is also arranged with a magnetic field at an angle to another adjacent magnet in the adjacent row.

BRIEF DESCRIPTION OF THE DRAWINGS

The advantages and features of the present invention will be better understood by the following description when considered in conjunction with the accompanying drawings in which:

FIG. **1** is a perspective view of an eddy current brake in accordance with the present invention generally showing first and second spaced apart support walls and first and second linear arrays of permanent magnets along with a diamagnetic or nonmagnetic member attached to moving apparatus such as a car, represented by dashed line;

FIG. **2** is a perspective view of a first linear array of permanent magnets disposed upon a first support walk;

FIG. **3** is an elevational view of the brake shown in FIG. **1**;

FIG. **4** shows a selectively actuatable brake system disengaged;

FIG. **5** shows a system of FIG. **8** engaged;

FIG. **6** is an elevational view of an alternative embodiment according with the present invention further showing apparatus for moving at least one of the first and second walls in order to control the distance between permanent magnets and opposing walls for adjusting braking force between the magnets and a member;

FIG. **7** is plan view of the brake shown in FIG. **6**;

FIG. **8** is an enlarged view of a linear array of permanent magnets in accordance with the present invention generally including a channel and a plurality of magnets disposed therein in a particular arrangement as will be hereinafter described in greater detail;

FIGS. **9** and **10** show embodiment of the present invention similar to that shown in FIGS. **8** and **9** and further including apparatus for adjusting eddy current induced and the member, and braking force, is a function of velocity of the member between arrays of magnets;

FIGS. **11–14** are diagrams of alternative embodiments of the present invention which provide for linkage from at least

one of the first and second walls to a fixed foundation for enabling movement of the member past the first and second walls with the first and second magnet arrays thereon to change a perpendicular relationship between the first and second walls and the member.

DETAILED DESCRIPTION

For the ensuing description of a braking apparatus **10** for an object **12**, reference is made particularly to FIGS. **1–3**. The object **12** is shown in generalized form only and is contemplated for movement in the direction of the arrow. Affixed to the object **12** is a member, or fin, **14** which extends outwardly from the object **12** and also moves with the object in the direction of arrow **15**.

At some point along the path of movement there are mounted first and second laterally spaced magnet arrays **16** and **18**. Each array includes an elongated support wall **20** which may be any cross-section, such as, for example an L-shaped cross-section, and on a lateral surface thereof, there are provided a linear series of permanent magnets **22**, of any size, arrangement or configuration. For instance, the magnets may alternate in polarity as indicated by the identification letters "S" and "N". Also, the space **26** between the arrays is dimensioned and arranged with respect to the object path of movement, that the fin **14** will move along the space directly opposite the magnets and spacers, but remain out of physical contact with either the magnets or spacers.

When the fin **14** passes through the magnetic field existing in the space **26**, an electric current (eddy current) is induced in the fin **14** which, in this case, reverses as the fin passes from a magnet of one polarity to a magnet of opposite polarity. These eddy currents produce a force exerted on the fin **14** (and object **12**) of such direction as to reduce the velocity of movement of object **12** and fin **14**. It is this deceleration that produces the "braking" of the present invention.

Although the above-described first embodiment includes movement of the object and fin past fixedly located magnet arrays, the magnet arrays can just as well be moved past a stationary object and fin. All that is needed to achieve the braking effect is relative movement between the magnets and fin. Since usually the object is moving, in that case the magnet arrays would be carried by the object and the fin fixedly mounted adjacent the path of movement. The choice of which technique to employ depends upon the particular application.

In its more general aspects, the invention can be advantageously employed for braking a large variety of moving objects. As an excellent example, eddy current braking for elevators could be highly advantageous as an emergency measure where normal operation has somehow been interfered with or disrupted. Also, many amusement park rides could benefit by having eddy current braking devices to retard excessive speed as the "ride" vehicle takes a corner or drops at a severe angle.

FIGS. **4** and **5** illustrate an object **52** with a brake fin **54** interconnected therewith, that moves generally along a direction indicated by an arrow **56** which normally will pass by a magnet carrier **58** beyond the range of substantial magnetic interaction (FIG. **4**). The object **52** and fin **54** are provided with means **60** selectively actuatable for moving them toward the magnet carrier so as to effect magnetically coupling therewith (FIG. **5**) and achieve braking.

With reference to FIGS. **6** and **7**, there is shown an alternate embodiment **100** of the eddy current brake in accordance with the present invention generally including a diamagnetic or non-magnetic member **102**, a first support wall **104** and a second support wall **106**. Walls **104, 106** are separate from one another and disposed in a spaced apart relationship upon a base or foundation **110** via leg portions **112, 114** respectively. The spaced apart relationship enables the member **102** to pass between the walls **104, 106** and because **104, 106** are not fixed with respect to one another, a distance D therebetween can be adjusted as will be hereinafter discussed in greater detail.

A first linear array **120** of permanent magnets **122**, see FIG. **8**, is disposed on the first on a side **124** facing the second wall **106**.

A second linear array **130** of permanents (not individually shown) are disposed on the second wall **106** on a side **132** facing the first wall **104** with the first and second arrays **120, 130** being parallel with one another as shown in FIG. **10**. Apparatus **140, 142** is provided for moving the walls **104, 106** and change the spaced apart relationship between the first and second walls **104, 106** in order to control, or adjust, eddy current induced in the member **102** during passage of the member **102** past and between the walls **104, 106** and magnets **120, 130** thereby adjusting the braking force between the magnets arrays **120, 130** and the member **102**.

The apparatus **140, 142** may include adjusting nuts **144, 146** and bolts **148A, 148B, 150A, 150B** interconnected between the walls **104, 106** and brackets **152, 154** fixed to the base **110**.

Jam nuts **156, 158** prevent unwanted movement of the adjusting nuts **144, 146** and securing bolts **160, 162** extending through the base **110** and legs **112, 114** through slots **166, 168**, fix the walls **104, 106** in a desired spaced apart relationship after adjustment. The exact size of the walls **104, 106**, magnet arrays **120, 130**, member **102** and spacing D will be dependant upon velocity and weight of a car (not shown) attached to the member **102** and may be empirically determined.

It should be appreciated that the apparatus **140, 142** may include any number of configurations for adjustment of the walls **104, 106**. Such alternatives including single direction bolts, worm screws, jack screws, short in-line turn buckles, or other electrical, pneumatic, hydraulic system capable of providing the adjustment of spacing D, between the walls **104, 106**. Such configurations may eliminate a need for the securing bolts **160** and **162**.

Preferably, each magnet array **120, 130**, as illustrated by the array **120** in FIG. **12**, includes at least **1** row **170**, each having individual magnets **180, 182, 184, 186**. A second row **172** may include individual magnets **188, 190, 192, 194** respectively.

The magnet rows **170, 172** may be disposed in a tube, or channel **200** which may be formed of any suitable material such as aluminum, stainless steel, plastic; any number of magnets (not all shown) may be used.

The magnets **180, 194** are specifically arranged within the channel **200** with a specific magnetic field pattern. While two rows **170, 172** are shown, it should be appreciated that any suitable number of rows (not shown) may be utilized.

The channel **200** may be removably attached in any suitable manner to the wall **104**. Thus, as hereinabove noted, assembly of the brake **100** is facilitated. Another advantage of the preassembly of magnets **180–186** is the is the fact that alternative magnet configurations may be easily exchanged on the wall **104** in order to tailor magnetic braking characteristics.

More particularly, a magnet **182** in a row **170** is arranged with a magnetic field (indicated by the arrow **204**) which is

at an angle to the magnetic fields **206, 208** of adjacent magnets **180, 184** in the row **170**. A number of angular relationship between the adjacent magnets **180, 182, 184** such as, for example, 15°, 30°, 45° or 90°. When the angular relationship between adjacent magnet **180, 182, 184** is 90°, they may also be arranged with the magnetic field **104** at a 90° angle to a magnetic field **210** of the magnet **190** in the adjacent row **172**.

Preferably, the magnets **180–194** are epoxied into the channel **200** and thereafter attached to the wall **104** in any suitable manner. Also, the channel **200** may be open, as shown, or closed, (not shown) and be of any suitable shape for containing the magnets. Because the magnets may be assembled in the channel **200** before installation on the wall **104, 106**, assembly of the brake **100** is facilitated. In addition, change of magnetic field can be easily performed by changing of channels (not shown) having different magnet configurations therein.

The multi-row Halbach arrangement as shown in FIG. **8**, can be built with no backiron. The advantage is that most of the flux is confined to the member of fin **102** area, without needing backiron as is needed in the standard eddy current brake (not shown). The flux is concentrated between the magnet array and is small above and below the magnets. Significant weight improvements result because no backiron is used.

Multiple rows **170, 172** in proper alignment permit the use of the cubic Halbach arrangement in such a way that brakes of increasing power levels can be constructed while maintaining a fixed depth of magnet.

The Halbach array can achieve higher braking forces for the equivalent volume of magnetic material of a conventional ECB. The Halbach array reduces stray magnetic field through the inactive side of the array.

With reference to the diagrams shown in FIGS. **13** and **14**, apparatus **250** including links **252, 254** interconnecting the wall **104** with a foundation **258** provides for changing, controlling, or adjusting eddy current induced in the member **102**, and braking force, as a function of member **102** velocity between the walls **104, 106** and arrays **120, 130**. Only one wall **104** is shown in FIGS. **13, 14** for the sake of clarity.

As shown by the directional arrows **260, 262** in FIGS. **13, 14** respectively, movement of the member **102** past the wall **104** and array **120** attached thereto provides a reaction force as shown by the arrow **266** which raises the wall **104** from stops **270, 272** in order to change a transverse relationship between the wall **4** and array **120** and the member **104**. This transverse movement raises **104** increasing relative penetration of **102**, which increases the induced eddy currents and braking action.

Because the drag force is a function of velocity, when the walls **104** are mounted for pivoting on the links **252, 254**, the wall **104** is raised a specific height based upon the drag force generated causing rotation of the links **250, 254**. Thus, the penetration of the member **102** into the magnetic flux established by the arrays **120, 130** is self regulated.

When used in one orientation, as shown in FIGS. **9, 10**, the member **102** having a velocity in excess in a predetermined value would generate drag forces **266** sufficient to rotate, or pivot, the wall **104** to increase member **102** penetration and subsequently generating higher drag forces to reduce the excess velocity. As the velocity falls below the level necessary to generate drag force sufficient to fully rotate the wall **104** and pivot linkages **252, 254**, the wall **104** rotates back toward the default position. How far back it rotates is a self regulating function of the velocity/drag force in that instance.

Thus, the apparatus **250** can be utilized as an automatic "trim" brake actuating only when necessary and only with a force necessary to maintain the desired velocity of the member **102** and vehicle attached (not shown). Opposite linkages (not shown) would have the effect of lowering the wall **102** upon movement of the member **102** therepast, thereby having the effect of flattening the initial drag peak and providing flatter more uniform deceleration.

As diagramed in FIGS. **11** and **12**, apparatus **280** including pivoting links **282, 284, 286, 288** interconnected between a foundation **290** and the walls **104, 106** enable movement of the member as indicated by the arrow **302** to pivot the links **282, 284, 286, 288** in direction indicated by the arrows **304, 306** in order to, change a distance d_1 between the walls **104, 106**. The magnet arrays are not shown in FIGS. **11** and **12** for the sake of clarity in describing wall **104, 106** movement. Since the walls **104, 106** carry the magnet arrays **120, 130** the distance between the arrays **120, 130** is also varied. The links **282, 284, 286, 288** may include spring loaded pivots **310, 312, 314, 316** respectively in order to bias the walls **104, 106** against stops **320, 322** in a rest position.

As shown in FIG. **12**, movement of the member between the walls **104, 106** decreases the distance d_1 to d_2, thus increasing the induced eddy currents and increasing a braking action. A stop **326** defines the minimum distance d_2 of approach between the walls **104, 106**.

Similar linkage apparatus is shown in FIGS. **13** and **14** in connection with the walls **104, 106** and member **102**. In this instance, links **342, 344, 346, 348** are interconnected so that movement indicated by the arrow **360** of the member **102** causes a spread or widening as indicated by the arrows **364, 366** of the walls **104, 106**. Stops **370, 372, 376** limit the movement of the walls **104, 106** in a manner similar to that described in connection with the apparatus **280** shown in FIGS. **11, 12**.

Spring loaded pivots keep the walls **104, 106** initially biased against the stop **376**. This configuration lowers the magnetic coupling due to movement of the member **102** between the walls **104, 106** and, as hereinabove noted, has the effect of flattening the initial drag peak and provide a flatter more uniform deceleration. It should be appreciated that other means of opening and closing arrays and lowering the walls **104, 106** may be utilized which can include other mechanical, pneumatic, hydraulic or other components (not shown) to provide the same function.

Although there has been hereinabove described an eddy current braking apparatus in accordance with the present invention for the purpose of illustrating the manner in which the invention may be used to advantage, it will be appreciated that invention is not limited thereto. Accordingly, all modifications, variations or equivalent arrangements which may occur to those skilled in the art should be considered to be within the scope of the invention as defined in the appended claims.

What is claimed is:

1. An eddy current brake comprising:

a diamagnetic or non-magnetic member;

a first support wall;

a separate second support wall disposed in a spaced apart relationship with said first support wall for enabling the member to pass therebetween;

a first linear array of permanent magnets disposed on the first wall on a side of the first wall facing the second wall;

a second linear array of permanent magnets disposed on the second wall on a side of the second wall facing the

first wall, the first and second arrays being parallel with one another; and

apparatus for adjusting eddy current induced in the member, and braking force, as a function of velocity of the member between the arrays, said apparatus including linkages for enabling movement of the member therepast to change the spaced apart relationship between the first and second walls.

2. Eddy current braking apparatus comprising:

a diamagnetic or non-magnetic member;

a linear array of permanent magnets including a channel and a plurality of magnets disposed therein, the magnets being arranged within said channel in two adjacent rows, each magnet in each row being arranged with a magnetic field at a 90° angle to another adjacent magnets in each row along the channel, each magnet in each row also being arranged with a magnetic field at an angle to another adjacent magnet in the adjacent row; and;

means, mounting the linear array with respect to the member, for enabling passage past one another at a distance sufficient to cause eddy currents to be induced in the member resulting in a braking force between the linear array and the member.

3. The brake according to claim **2** further comprising a second linear array of permanent magnets including a second channel and a plurality of magnets disposed therein, the magnets being arranged within said second channel in two adjacent rows, each magnet in each row being arranged with a magnetic field at a 90° angle to adjacent magnets in each row along said second channel, each magnet in each row also being arranged with a magnetic field at a 90° angle to another adjacent magnet in the adjacent row; and

means, mounting the second linear array with respect to the member, for enabling passage past one another at a distance sufficient to cause eddy currents to be induced in the member resulting in a braking force between the linear array and the member.

4. The brake according to claim **3** further comprising a first support wall for, supporting the linear array, and second wall for supporting the second linear array and apparatus for moving at least one of the first and second walls in order to control the eddy current induced in the member during passage of the member therepast to adjust braking force between the magnets and the member.

5. The brake according to claim **4** wherein the apparatus includes means for moving at least one of the first and second walls in a direction perpendicular to the member.

6. The brake according to claim **4** wherein the apparatus includes means for moving at least one of the first and second walls in a direction parallel to the member.

7. The brake according to claim **3** further comprising a first support wall for supporting the linear array, a second wall, disposed in a spaced apart relationship with said first support wall, for supporting the second linear array and apparatus for changing the spaced apart relationship between the first and second walls in order to adjust eddy current induced in the member, and braking force, as a function of velocity of the member between the arrays.

8. The brake according to claim **7** wherein the apparatus for adjusting eddy current includes a linkage mounting at least one of the first and second walls to a fixed foundation, for enabling movement of the member therepast to change a distance between at least one of the first and second walls and the member.

9. The brake according to claim **7** wherein the apparatus for adjusting eddy current includes linkages, mounting the first and second walls to a fixed foundation, for enabling movement of the member therepast to change the spaced apart relationship between the first and second walls.

10. An eddy current brake comprising:

a diamagnetic or non-magnetic member;

a first linear array of permanent magnets;

a second linear array of permanent magnets disposed in a spaced apart relationship with said first linear array for enabling the member to pass therebetween, the first and second arrays being parallel with one another; and

apparatus for adjusting eddy current induced in the member, and braking force, as a function of velocity of the member between the arrays, said apparatus including linkages for enabling movement of the member therepast to change the spaced apart relationship between the first and second arrays.

* * * * *