IN THE UNITED STATES DISTRICT COURT
FOR THE DISTRICT OF DELAWARE

OSRAM GMBH and OSRAM OPTO SEMICONDUCTORS GMBH Plaintiffs, v. CITIZEN WATCH CO., LTD., CITIZEN ELECTRONICS CO., LTD., and CECOL, INC. Defendants.	Civil Action No. _____ **JURY TRIAL DEMANDED**

COMPLAINT

Plaintiffs OSRAM GmbH and OSRAM Opto Semiconductors GmbH (collectively "OSRAM"), by and through the undersigned attorneys, for their Complaint against Citizen Watch Co., Ltd., Citizen Electronics Co., Ltd., and Cecol, Inc. (collectively "Citizen"), allege the following:

NATURE OF THE ACTION

1. This is a civil action for patent infringement arising under the patent laws of the United States, Title 35, United States Code. OSRAM seeks damages, injunctive relief, and other relief for Citizen's infringement of its United States patents.

PARTIES

2. OSRAM GmbH is a German corporation with its principal place of business located at Hellabrunner Strasse 1, 81543 Munich, Germany.

3. OSRAM Opto Semiconductors GmbH is a German corporation with its principal place of business located at Wernerwerkstrasse 2, 93049 Regensburg, Germany.

4. Upon information and belief, Citizen Watch Co., Ltd. is a Japanese corporation with its principal place of business located at 6-1-12, Tanashi-cho, Nishi-Tokyo-shi, Tokyo 188-8511, Japan.

5. Upon information and belief, Citizen Electronics Co., Ltd. is a Japanese corporation with its principal place of business located at 1-23-1, Kamikurechi Fujiyoshida-shi Yamanashi-ken 403-0001, Japan.

6. Upon information and belief, Cecol, Inc. is a Delaware corporation with a principal place of business at 951 North Plum Grove Road, Suite D, Schaumburg, IL 60173.

JURISDICTION AND VENUE

7. This Court has jurisdiction over this action pursuant to 28 U.S.C. §§ 1331 and 1338(a).

8. Venue is proper in this District pursuant to 28 U.S.C. §§ 1391 and 1400(b).

9. This Court has personal jurisdiction over Defendants. Upon information and belief, Cecol, Inc., is a Delaware corporation and has committed acts of infringement. Upon information and belief, Citizen Electronics Co., Ltd. is the parent corporation of Cecol, Inc. and has committed acts of infringement by itself and through Cecol, Inc. Upon information and belief Citizen Watch Co., Ltd. is the parent of Citizen Electronics Co., Ltd. and has committed acts of infringement through Citizen Electronics Co., Ltd., and contracts to supply services and/or things in Delaware.

BACKGROUND

10. Citizen has sued OSRAM twice, and both times its suits have been dismissed. Citizen first sued OSRAM in January 2005, seeking a declaration that several OSRAM patents were invalid and/or not infringed. OSRAM successfully sought to dismiss Citizen's suit for lack of subject matter jurisdiction. On July 29, 2005, the court issued its final order dismissing Citizen's first suit. Citizen sued OSRAM again a few days later.

11. OSRAM was again successful in obtaining dismissal of Citizen's second suit because nothing had changed since the first dismissal. The court held that Citizen was foreclosed from re-litigating the issue of subject matter jurisdiction because Citizen had failed to cure the jurisdictional defect in its first suit. The court also stated that it would exercise its discretion to dismiss the suit. The court issued its final order dismissing Citizen's second suit in December 2005.

12. Citizen provoked OSRAM by suing OSRAM twice in 2005. Unlike many other companies who have paid to license OSRAM's valuable patents, Citizen has refused to respect OSRAM's patent rights. Instead, Citizen has tried to challenge OSRAM's patents in court when it had no legal basis to do so. In the year since the dismissal of Citizen's second suit, Citizen has continued to show no respect for OSRAM's U.S. patent rights. OSRAM brings this suit now to obtain damages for Citizen's past infringement and to stop Citizen from continuing to infringe its valuable patent rights.

PATENTS IN SUIT

13. U.S. Patent No. 6,245,259 ("the '259 patent"), entitled "Wavelength-Converting Casting Composition and Light-Emitting Semiconductor Component," issued on June 12, 2001,

naming inventors Klaus Höhn, Alexandra Debray, Peter Schlotter, Ralf Schmidt, and Jürgen Schneider. A true and correct copy of the '259 patent is attached hereto as Exhibit A.

14. U.S. Patent No. 6,277,301 ("the '301 patent"), entitled "Method of Producing a Wavelength-Converting Casting Composition," issued on August 21, 2001, naming inventors Klaus Höhn, Alexandra Debray, Peter Schlotter, Ralf Schmidt, and Jürgen Schneider. A true and correct copy of the '301 patent is attached hereto as Exhibit B.

15. U.S. Patent No. 6,592,780 ("the '780 patent"), entitled "Wavelength-Converting Casting Composition and White Light-Emitting Semiconductor Component," issued on July 15, 2003, naming inventors Klaus Höhn, Alexandra Debray, Peter Schlotter, Ralf Schmidt, and Jürgen Schneider. A true and correct copy of the '780 patent is attached hereto as Exhibit C.

16. U.S. Patent No. 6,613,247 ("the '247 patent"), entitled "Wavelength-Converting Casting Composition and White Light-Emitting Semiconductor Component," issued on September 2, 2003, naming inventors Klaus Höhn, Alexandra Debray, Peter Schlotter, Ralf Schmidt, and Jürgen Schneider. A true and correct copy of the '247 patent is attached hereto as Exhibit D.

17. U.S. Patent No. 6,812,500 ("the '500 patent"), entitled "Light-Radiating Semiconductor Component with a Luminescence Conversion Element," issued on November 2, 2004, naming inventors Ulrike Reeh, Klaus Höhn, Norbert Stath, Günter Waitl, Peter Schlotter, Jürgen Schneider, and Ralf Schmidt. A true and correct copy of the '500 patent is attached hereto as Exhibit E.

18. U.S. Patent No. 7,126,162 ("the '162 patent"), entitled "Light-Radiating Semiconductor Component with a Luminescence Conversion Element," issued on October 24, 2006, naming inventors Ulrike Reeh, Klaus Höhn, Norbert Stath, Günter Waitl, Peter Schlotter,

Jürgen Schneider, and Ralf Schmidt. A true and correct copy of the '162 patent is attached hereto as Exhibit F.

19. The '259 patent, the '301 patent, the '780 patent, the '247 patent, the '500 patent, and the '162 patent (collectively "the patents-in-suit") are assigned to OSRAM GmbH. OSRAM Opto Semiconductors GmbH is the exclusive licensee of patents-in-suit and is authorized to take action against infringement.

COUNT I – INFRINGEMENT OF THE '259 PATENT

20. Each of the foregoing paragraphs 1-19 is incorporated herein by reference.

21. Citizen has been infringing, and/or inducing infringement, and/or contributing to the infringement of the '259 patent by making, using, offering to sell, and/or selling within the United States, and/or importing into the United States light-emitting diodes that emit white light ("white LEDs").

22. Citizen's infringement of the '259 patent has injured OSRAM, and thus OSRAM is entitled to recover damages adequate to compensate for Citizen's infringement, together with interest and costs.

23. Citizen has had actual knowledge of the '259 patent.

24. Citizen has been willfully infringing the '259 patent, and thus OSRAM is entitled to recover increased damages under 35 U.S.C. § 284.

25. Citizen's willful infringement of the '259 patent makes this case exceptional, and thus OSRAM is entitled to recover attorneys' fees under 35 U.S.C. § 285.

26. Citizen's infringement of the '259 patent has caused irreparable injury to OSRAM and will continue to cause irreparable injury until Citizen is enjoined from further infringement.

COUNT II – INFRINGEMENT OF THE '301 PATENT

27. Each of the foregoing paragraphs 1-19 is incorporated herein by reference.

28. Citizen has been infringing the '301 patent by importing into the United States, offering to sell, selling, or using within the United States white LEDs which are made by a process patented under the '301 patent.

29. Citizen's infringement of the '301 patent has injured OSRAM, and thus OSRAM is entitled to recover damages adequate to compensate for Citizen's infringement, together with interest and costs.

30. Citizen has had actual knowledge of the '301 patent.

31. Citizen has been willfully infringing the '301 patent, and thus OSRAM is entitled to recover increased damages under 35 U.S.C. § 284.

32. Citizen's willful infringement of the '301 patent makes this case exceptional, and thus OSRAM is entitled to recover attorneys' fees under 35 U.S.C. § 285.

33. Citizen's infringement of the '301 patent has caused irreparable injury to OSRAM and will continue to cause irreparable injury until Citizen is enjoined from further infringement.

COUNT III – INFRINGEMENT OF THE '780 PATENT

34. Each of the foregoing paragraphs 1-19 is incorporated herein by reference.

35. Citizen has been infringing and/or inducing infringement, and/or contributing to the infringement of the '780 patent by making, using, offering to sell, and/or selling within the United States, and/or importing into the United States white LEDs.

36. Citizen's infringement of the '780 patent has injured OSRAM, and thus OSRAM is entitled to recover damages adequate to compensate for Citizen's infringement, together with interest and costs.

37. Citizen has had actual knowledge of the '780 patent.

38. Citizen has been willfully infringing the '780 patent, and thus OSRAM is entitled to recover increased damages under 35 U.S.C. § 284.

39. Citizen's willful infringement of the '780 patent makes this case exceptional, and thus OSRAM is entitled to recover attorneys' fees under 35 U.S.C. § 285.

40. Citizen's infringement of the '780 patent has caused irreparable injury to OSRAM and will continue to cause irreparable injury until Citizen is enjoined from further infringement.

COUNT IV – INFRINGEMENT OF THE '247 PATENT

41. Each of the foregoing paragraphs 1-19 is incorporated herein by reference.

42. Citizen has been infringing and/or inducing infringement, and/or contributing to the infringement of the '247 patent by making, using, offering to sell, and/or selling within the United States, and/or importing into the United States white LEDs.

43. Citizen's infringement of the '247 patent has injured OSRAM, and thus OSRAM is entitled to recover damages adequate to compensate for Citizen's infringement, together with interest and costs.

44. Citizen has had actual knowledge of the '247 patent.

45. Citizen has been willfully infringing the '247 patent, and thus OSRAM is entitled to recover increased damages under 35 U.S.C. § 284.

46. Citizen's willful infringement of the '247 patent makes this case exceptional, and thus OSRAM is entitled to recover attorneys' fees under 35 U.S.C. § 285.

47. Citizen's infringement of the '247 patent has caused irreparable injury to OSRAM and will continue to cause irreparable injury until Citizen is enjoined from further infringement.

COUNT V – INFRINGEMENT OF THE '500 PATENT

48. Each of the foregoing paragraphs 1-19 is incorporated herein by reference.

49. Citizen has been infringing and/or inducing infringement, and/or contributing to the infringement of the '500 patent by making, using, offering to sell, and/or selling within the United States, and/or importing into the United States white LEDs.

50. Citizen's infringement of the '500 patent has injured OSRAM, and thus OSRAM is entitled to recover damages adequate to compensate for Citizen's infringement, together with interest and costs.

51. Citizen has had actual knowledge of the '500 patent.

52. Citizen has been willfully infringing the '500 patent, and thus OSRAM is entitled to recover increased damages under 35 U.S.C. § 284.

53. Citizen's willful infringement of the '500 patent makes this case exceptional, and thus OSRAM is entitled to recover attorneys' fees under 35 U.S.C. § 285.

54. Citizen's infringement of the '500 patent has caused irreparable injury to OSRAM and will continue to cause irreparable injury until Citizen is enjoined from further infringement.

COUNT VI – INFRINGEMENT OF THE '162 PATENT

55. Each of the foregoing paragraphs 1-19 is incorporated herein by reference.

56. Citizen has been infringing and/or inducing infringement, and/or contributing to the infringement of the '162 patent by making, using, offering to sell, and/or selling within the United States, and/or importing into the United States white LEDs.

57. Citizen's infringement of the '162 patent has injured OSRAM, and thus OSRAM is entitled to recover damages adequate to compensate for Citizen's infringement, together with interest and costs.

58. Citizen has had actual knowledge of the '162 patent.

59. Citizen has been willfully infringing the '162 patent, and thus OSRAM is entitled to recover increased damages under 35 U.S.C. § 284.

60. Citizen's willful infringement of the '162 patent makes this case exceptional, and thus OSRAM is entitled to recover attorneys' fees under 35 U.S.C. § 285.

61. Citizen's infringement of the '162 patent has caused irreparable injury to OSRAM and will continue to cause irreparable injury until Citizen is enjoined from further infringement.

PRAYER FOR RELIEF

WHEREFORE, OSRAM respectfully requests that the Court enter judgment:

a. For OSRAM and against Citizen on all counts asserted in this Complaint;

b. That Citizen has infringed the '259 patent, the '301 patent, the '780 patent, the '247 patent, the '500 patent, and the '162 patent;

c. Permanently enjoining Citizen and its officers, agents, servants, employees, attorneys, and all persons in active concert or participation with any of them, from infringing the '259 patent, the '301 patent, the '780 patent, the '247 patent, the '500 patent, and the '162 patent;

d. Awarding OSRAM damages in an amount sufficient to compensate it for Citizen's infringement, together with prejudgment and post-judgment interest and costs, pursuant to 35 U.S.C. § 284;

e. Trebling the damages awarded to OSRAM by reason of Citizen's willful infringement, pursuant to 35 U.S.C. § 284;

f. Declaring this case "exceptional" under 35 U.S.C. § 285 and awarding OSRAM its attorneys' fees, expenses and costs incurred in this action; and

g. Awarding OSRAM such other and further relief as this Court deems just and proper.

JURY DEMAND

OSRAM demands a trial by jury on all issues so triable.

Dated: November 27, 2006

FISH & RICHARDSON P.C.

By: _____

William J. Marsden, Jr. (#2247)
FISH & RICHARDSON P.C.
919 N. Market St., Ste. 1100
P. O. Box 1114
Wilmington, DE 19899-1114
Telephone: 302-652-5070
Facsimile: 302-652-0607

Of counsel:

Alan D. Smith
Charles H. Sanders
FISH & RICHARDSON P.C.
225 Franklin Street
Boston, MA 02110
Telephone: 617-542-5070
Facsimile: 617-542-8906

Attorneys for Plaintiffs
OSRAM GmbH and OSRAM Opto Semiconductors GmbH

Complaint (OSRAM v Citizen).doc

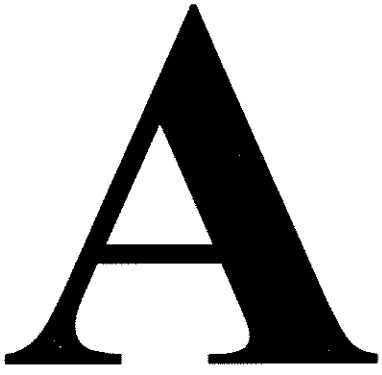

US006245259B1

(12) **United States Patent**
Höhn et al.

(10) **Patent No.: US 6,245,259 B1**
(45) **Date of Patent: *Jun. 12, 2001**

(54) **WAVELENGTH-CONVERTING CASTING COMPOSITION AND LIGHT-EMITTING SEMICONDUCTOR COMPONENT**

(75) Inventors: **Klaus Höhn**, Taufkirchen; **Alexandra Debray**, Regensburg; **Peter Schlotter**, Freiburg; **Ralf Schmidt**, Vörstetten; **Jürgen Schneider**, Kirchzarten, all of (DE)

(73) Assignee: **Osram Opto Semiconductors, GmbH & Co. OHG**, Regensburg (DE)

(*) Notice: Subject to any disclaimer, the term of this patent is extended or adjusted under 35 U.S.C. 154(b) by 0 days.

This patent is subject to a terminal disclaimer.

(21) Appl. No.: **09/650,932**

(22) Filed: **Aug. 29, 2000**

Related U.S. Application Data

(62) Division of application No. 09/536,564, filed on Mar. 28, 2000, which is a division of application No. 09/082,205, filed on May 20, 1998, now Pat. No. 6,066,861, which is a continuation of application No. PCT/DE97/02139, filed on Sep. 22, 1997.

(30) **Foreign Application Priority Data**

Sep. 20, 1996 (DE) 196 38 667

(51) **Int. Cl.**[7] **H01L 33/00**; C09K 11/02; H01J 63/04

(52) **U.S. Cl.** **252/301.36**; 257/99; 257/98; 257/100; 257/81; 257/89; 313/486; 313/467; 313/468

(58) **Field of Search** ..... 252/301.36, 301.4 R; 257/99, 98, 100; 313/486, 467, 468; 250/81, 89

(56) **References Cited**

U.S. PATENT DOCUMENTS

3,453,604	7/1969	Geusic et al.	340/173
3,510,732	5/1970	Amans	317/234
3,529,200	9/1970	Potter	313/108
3,573,568	4/1971	Siegel	313/108
3,593,055	7/1971	Geusic	313/108
3,654,463	4/1972	Geusic et al.	250/71 R
3,691,482	9/1972	Pinnow et al.	332/7.51

(List continued on next page.)

FOREIGN PATENT DOCUMENTS

26 42 465	3/1978	(DE) .
38 04 293 A1	8/1989	(DE) .

(List continued on next page.)

OTHER PUBLICATIONS

Translation of Japanese Patent No. 2927279.
Applied Physics Letters, "Candela–class high–brightness InGaN/AlGaN double–heterostructure blue–light–emitting diodes", Mar. 28, 1994, 64 (13), pp. 1687–1689.

(List continued on next page.)

Primary Examiner—C. Melissa Koslow
(74) *Attorney, Agent, or Firm*—Fish & Richardson P.C.

(57) **ABSTRACT**

The wavelength-converting casting composition is based on a transparent epoxy casting resin with a luminous substance admixed. The composition is used in an electroluminescent component having a body that emits ultraviolet, blue or green light. An inorganic luminous substance pigment powder with luminous substance pigments is dispersed in the transparent epoxy casting resin. The luminous substance is a powder of Ce-doped phosphors and the luminous substance pigments have particle sizes $\leqq 20\ \mu m$ and a mean grain diameter $d_{50} \leqq 5\ \mu m$.

16 Claims, 4 Drawing Sheets

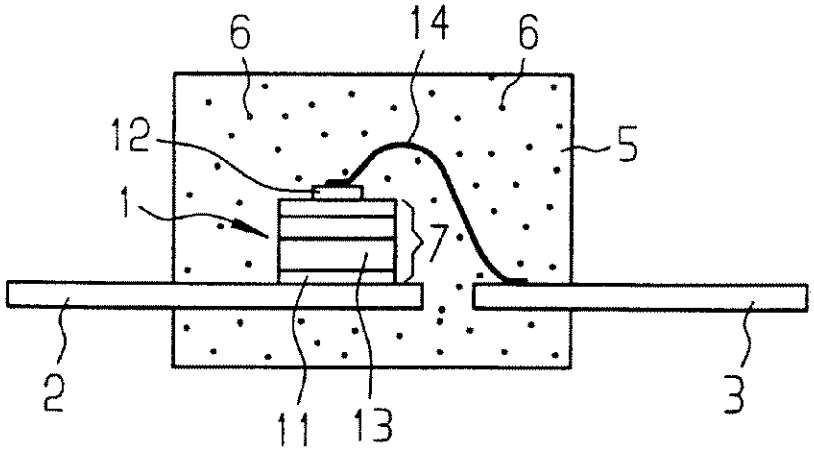

U.S. PATENT DOCUMENTS

3,699,478		10/1972	Pinnow et al.	332/7.51
3,819,974		6/1974	Stevenson et al.	313/499
3,932,881		1/1976	Mita	357/17
3,942,185		3/1976	Lebailly	357/17
4,146,790		3/1979	Goetzberger et al.	250/336
4,173,495		11/1979	Rapp et al.	136/89 PC
4,262,206		4/1981	Viehmann	250/483
4,298,820		11/1981	Bongers et al.	313/463
4,431,941		2/1984	Roy et al.	313/487
4,495,514		1/1985	Lawrence et al.	357/67
4,550,256		10/1985	Berkstresser et al.	250/483.1
4,599,537		7/1986	Yamashita	313/501
4,716,337		12/1987	Huiskes et al.	313/487
4,727,283		2/1988	Van Kemenade et al.	313/487
4,734,619		3/1988	Havel	313/516
4,818,983		4/1989	Hara et al.	340/794
5,019,746		5/1991	Merg	313/512
5,035,513		7/1991	Fehrenbach et al.	374/161
5,120,214		6/1992	Tokarlin	424/690
5,184,114		2/1993	Brown	340/701
5,369,289		11/1994	Tamaki et al.	257/99
5,471,113		11/1995	DeBacker et al.	313/487
5,535,230		7/1996	Abe	372/43
5,602,418		2/1997	Imai et al.	257/627
5,652,438		7/1997	Sassa et al.	257/94
5,656,832		8/1997	Ohba et al.	257/190
5,670,798		9/1997	Schetzina	257/96
5,959,316		9/1999	Lowery	257/98
5,998,925	*	12/1999	Shimizu et al.	313/503
6,066,861	*	5/2000	Hohn et al.	257/99
6,078,063		6/2000	Nakamura et al.	257/96

FOREIGN PATENT DOCUMENTS

90 13 615		1/1991	(DE) .
0 039 017 B1		11/1981	(EP) .
0486052A1		5/1992	(EP) .
1332462		10/1973	(GB) .
2053953		2/1981	(GB) .
1589964		5/1981	(GB) .
46-7462		12/1971	(JP) .
47-17684		9/1972	(JP) .
49-1221		1/1974	(JP) .
49-112577		10/1974	(JP) .
50-43913		4/1975	(JP) .
52-45181		10/1977	(JP) .
54-41660		12/1979	(JP) .
59-50455		4/1984	(JP) .
63-280467		11/1988	(JP) .
4-63162		5/1992	(JP) .
4-63163		5/1992	(JP) .
5-152609		6/1993	(JP) .
5-63068		8/1993	(JP) .
7-99345		4/1995	(JP) .
7-176794		7/1995	(JP) .
8-7614		1/1996	(JP) .
98/12757	*	3/1998	(WO) .

OTHER PUBLICATIONS

J. Applied Physics, "Large–band gap SiC, III–V nitride, and II–VI Zn–Se–based semiconductor device technologies", Aug. 1, 1994, 76 (3), pp. 1363–1398.

J. Vac. Sci. Technol., InGaN/AlGaN blue–light emitting diode, May/Jun. 1995, A13 (3), pp. 705–710.

Journal of IES (Illuminating Engineering Soc.), "Improved color rendition in high pressure mercury vapor lamps", Jan. 1977, pp. 89–91.

Physical Review, "Frequency Upconversion in YF_3:Yb^{3+} $Tm3^{+}$", Apr. 15, 1971, B3 (8), pp. 2698–2705.

J. Applied Physics, "Efficiency of Red, Green, and Blue Infrared–to–Visible Conversion Sources", Apr. 1971, pp. 1958–1960.

English abstract of Japanese Laid–open Patent 01–179471, Jul. 17, 1989.

Translation of Japanese Laid–open Patent 05–152609, Jun. 18, 1993.

English abstract of Japanese Laid–open 07–099345, Apr. 11, 1995.

Translation of Japanese Laid–open Patent 07–176794, Jul. 14, 1995.

Translation of Japanese Laid–open Patent 08–7614, Jan. 12, 1996.

Osinski, Marek, AlGaN/InGaN/GaN blue light emitting diode degradation under pulsed current stress, Applied Physics Letter, Aug. 12, 1996, pp. 898–900.

D.J. Robbins: "The Effects of Crystal Field and Temperature on the Photoluminescence Excitation of Ce^{3+}in YAG", J. Electrchem. Soc.: Solid State Science and Technology 1979, vol. 126, No. 9, pp. 1550–1555.

Glen A. Slack et al.: "Optical Absorption of $Y_3A_{15}O_{12}$ from 10– to 55000–cm Wave Numbers", Physical Review, vol. 177, No. 3, Jan. 15, 1969, pp. 1308–1314.

Shuji Nakamura et al.: "The blue laser diode: GaN based Light emitters and lasers", Springer Vertag, Berlin, 1997, pp. 216–219, 328.

G.. Blasse et al.,: "A New Phosphor for Flying—Spot Cathode–Ray Tubes for Color Television: Yellow Emitting $Y^3Al_5O^{12}$–Ce_{3+}", Applied Physics Letter, vol. 11, No. 2, 15, pp. 53, 54.

B.M.J. Smets: "Phosphors Based On Rare–Earths, A New Era in Fluorescent Lighting", Materials Chemistry and Physics, 16 (1987), pp. 283–299.

Cheo et al.: "White Light Emitting glasses", Journal Solid State Chemistry, 1991, pp. 17–29.

Siemans Forsch.—Entwichkl.—Ber. Bd (1997), No. 3, p. 162 [Siemens Research and Development Reports], vol. 6.

S.N. Mohammad et al.: "emerging gallium Nitride Based Devices", Proceeding of the IEEE, vol. 83, No. 10, Oct. 1995, pp. 1306–1355.

Translation of Japanese Laid–open Patent 50–43913, Apr. 21, 1975.

* cited by examiner

FIG 1

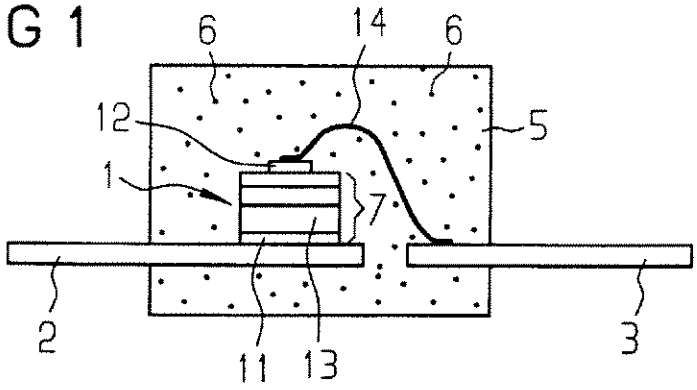

FIG 2

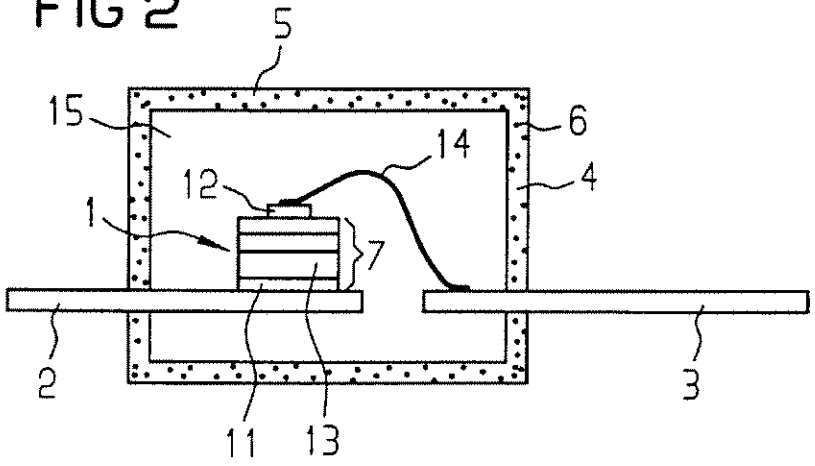

FIG 3

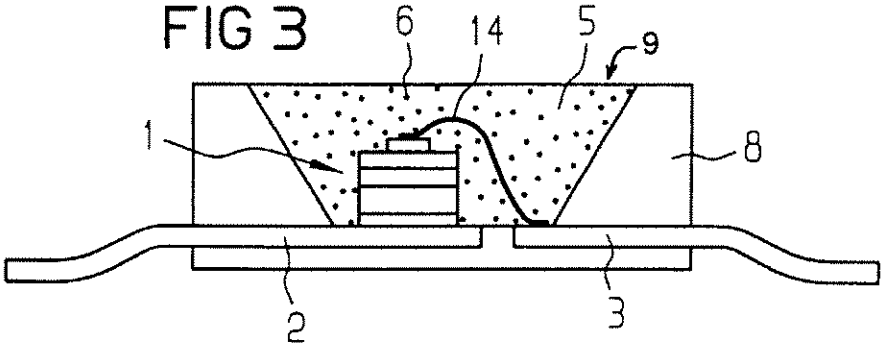

FIG 4

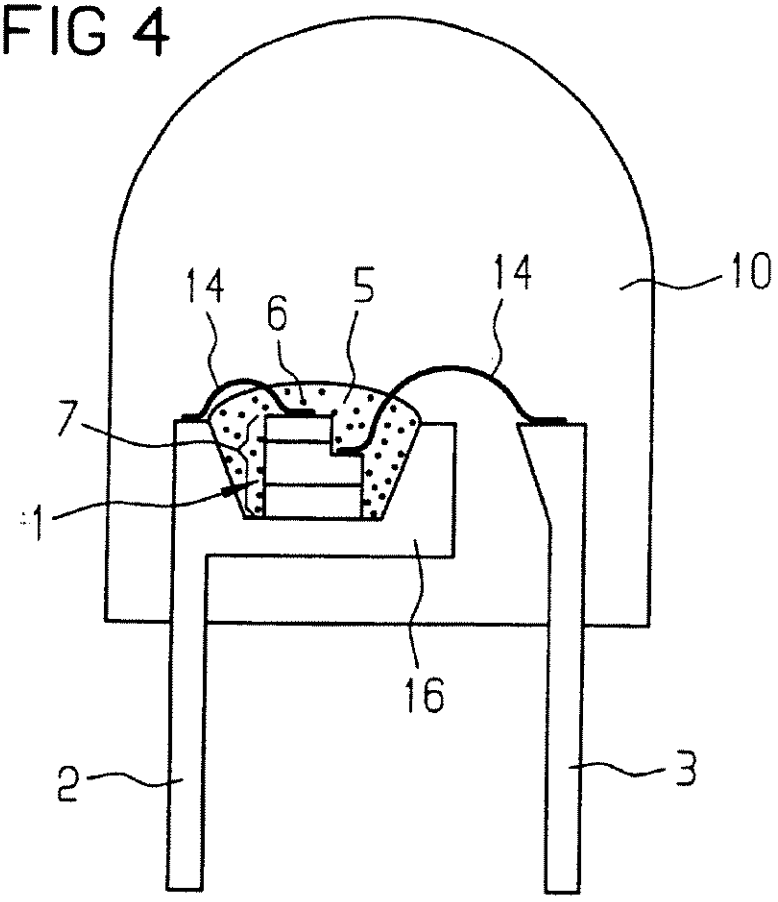

FIG 5

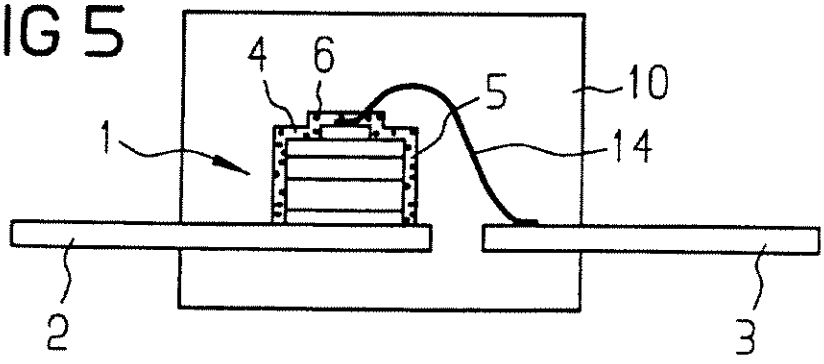

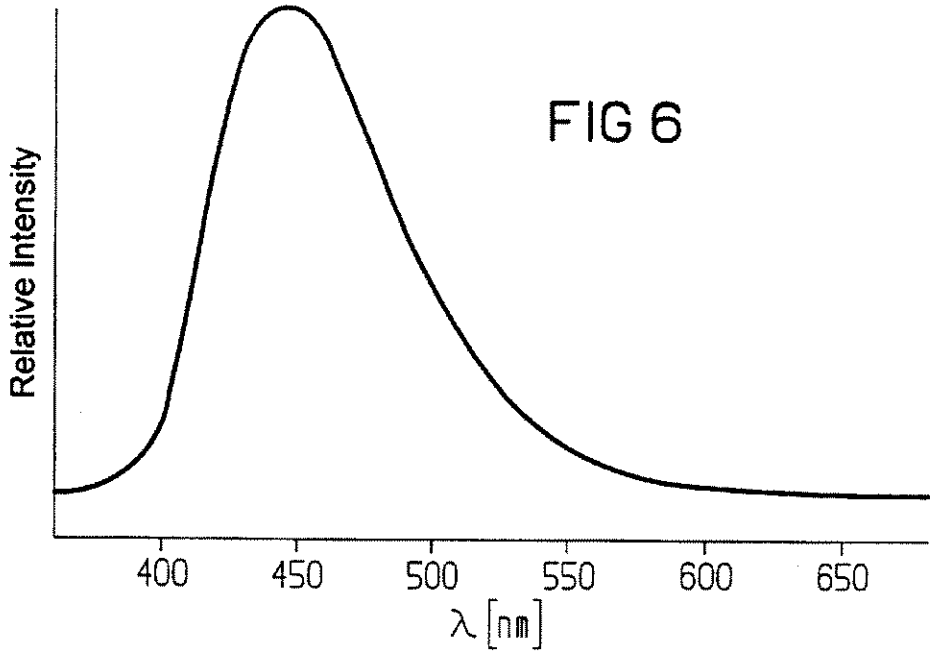
Relative Intensity
400
450
500
550
600
650
λ [nm]

FIG 6

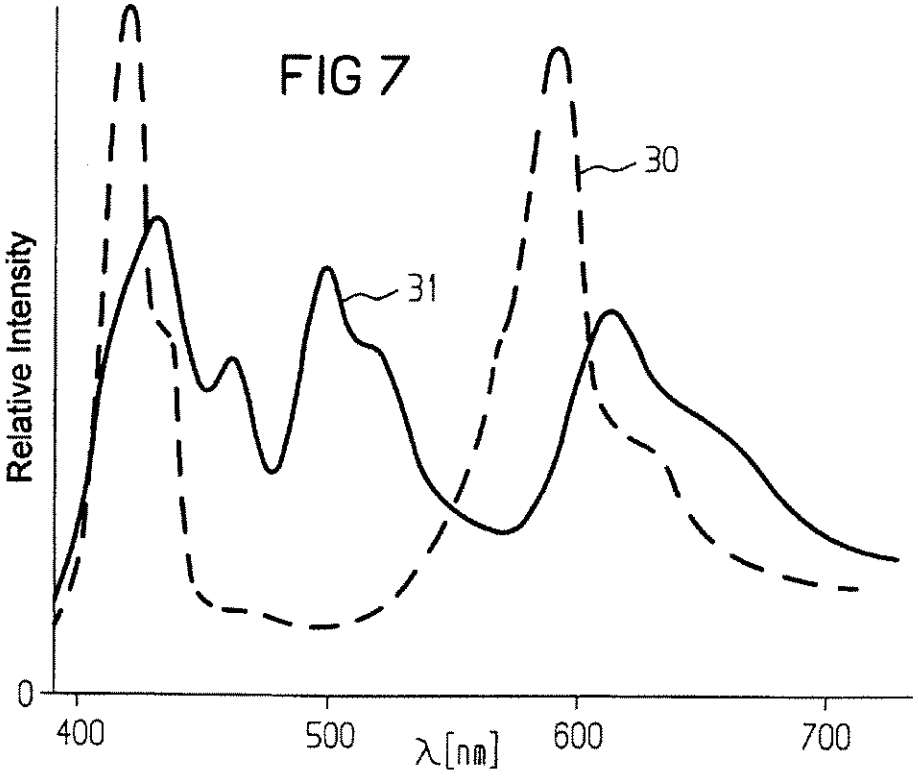
Relative Intensity
0
400
500
600
700
λ[nm]
30
31

FIG 7

FIG 8

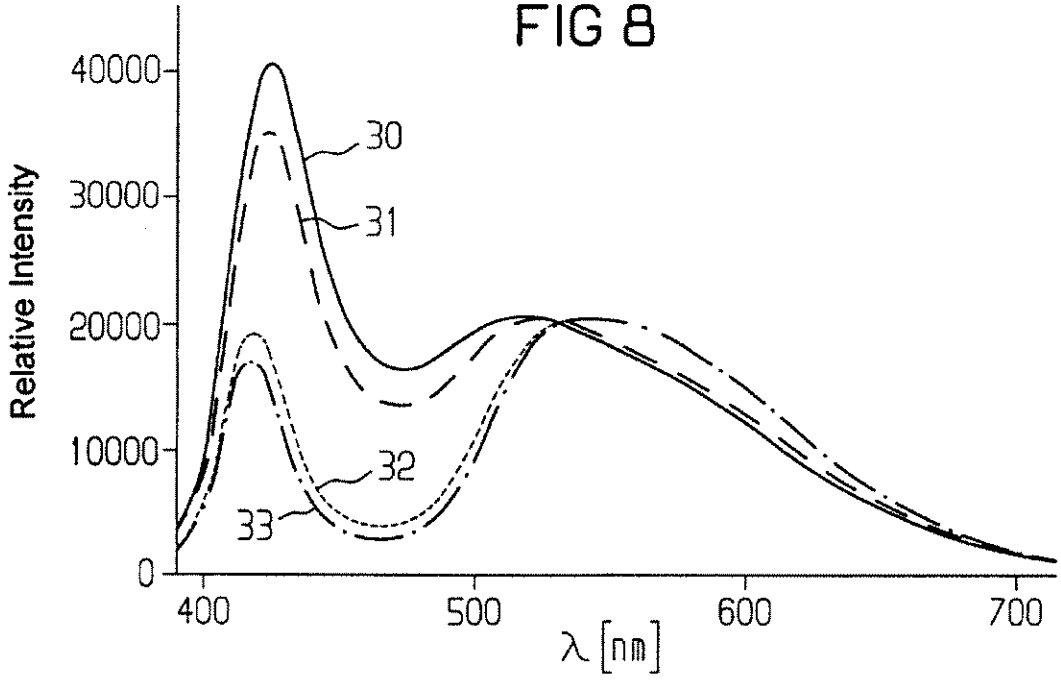
Relative Intensity
40000
30000
20000
10000
0
400
500
600
700
λ [nm]
30
31
32
33

WAVELENGTH-CONVERTING CASTING COMPOSITION AND LIGHT-EMITTING SEMICONDUCTOR COMPONENT

CROSS-REFERENCE TO RELATED APPLICATION

This is a division of copending application Ser. No. 09/536,564, filed Mar. 28, 2000, which is a division of application Ser. No. 09/082,205, filed May 20, 1998, now U.S. Pat. No. 6,066,861, which was a continuation of international application PCT/DE97/02139, filed Sep. 22, 1997, which designated the United States.

BACKGROUND OF THE INVENTION

1. Field of the Invention

The invention relates to a wavelength-converting casting composition based on a transparent epoxy casting resin which is mixed with a luminous substance, for an electroluminescent component having a body that emits ultraviolet, blue or green light.

2. Description of the Related Art

A component of that type has become known, for instance, from German published, non-prosecuted patent application DE 38 04 293. The reference describes an arrangement with an electroluminescent diode or laser diode, in which the emissions spectrum emitted by the diode is shifted toward longer wavelengths, by means of a plastic element mixed with a fluorescing, light-converting, organic colorant. The light emitted by the arrangement as a result has a different color from what the light emitting diode emitted. Depending on the type of colorant added to the plastic, it is possible to produce LED arrays that light up in different colors with one and the same type of light-emitting diode (LED).

In many potential applications for LEDs, such as in display elements in motor vehicle dashboards, illumination in aircraft and automobiles, and in LED displays capable of showing full color, there is an increasing demand for LED arrays with which mixed color light and in particular white light can be generated.

However, the prior art casting compositions of the type referred to at the outset with organic luminous substances exhibit a shift in the color location, that is, the color of the light emitted by the electroluminescent component, under temperature and temperature/humidity stresses. Japanese patent disclosure JP-07 176 794-A describes a white-light-emitting planar light source, in which two diodes that emit blue light are disposed on one face end of a transparent plate and emit light into the transparent plate. The transparent plate is coated on one of the two opposed main sides with a fluorescing substance that emits light when it is excited with the blue light of the diodes. The light emitted by the fluorescing substance has a different wavelength from the blue light emitted by the diodes. In this known component, it is especially difficult to apply the fluorescing substance in such a way that the light source emits homogeneous white light. Moreover, replicability and mass production presents major problems, because even slight fluctuations in the layer thickness of the fluorescing layer, for instance from irregularities of the surface of the transparent plate, cause a change in the white of the light emitted.

SUMMARY OF THE INVENTION

It is accordingly an object of the invention to provide a wavelength-converting casting mass, which overcomes the above-mentioned disadvantages of the prior art devices and

methods of this general type and with which electroluminescent components can be produced that emit homogeneous mixed-colored light, and which enables mass production at reasonable engineering effort and expense and with maximally replicable component characteristics. The emitted light should be color-stable even under temperature and temperature/humidity stresses. It is a further object to specify a use for the casting mass and a method for producing the composition.

With the foregoing and other objects in view there is provided, in accordance with the invention, a wavelength-converting casting composition, for converting a wavelength of ultraviolet, blue or green light emitted by an electroluminescent component, comprising:

a transparent epoxy casting resin;

an inorganic luminous substance pigment powder dispersed in the transparent epoxy resin, the pigment powder comprising luminous substance pigments from a phosphorous group having the general formula $A_3B_5X_{12}$:M;

the luminous substance pigments having grain sizes $\leqq 20$ μm and a mean grain diameter $d_{50} \leqq 5$ μm.

In accordance with an added feature of the invention, the mean grain diameter d_{50} of the luminous substance pigments is between one and two micrometers.

Inorganic/mineral luminous substances are extremely stable with regard to temperature and temperature/humidity stresses.

In accordance with an additional feature of the invention, the composition includes the following parts:

a) epoxy casting resin $\geqq 60\%$ by weight;

b) luminous substance pigments >0 and $\leqq 25\%$ by weight;

c) thixotropic agent >0 and $\leqq 10\%$ by weight;

d) mineral diffusor >0 and $\leqq 10\%$ by weight;

e) processing adjuvant >0 and $\leqq 3\%$ by weight;

f) hydrophobic agent >0 and $\leqq 3\%$ by weight; and

g) adhesion promoters >0 and $\leqq 2\%$ by weight.

Suitable epoxy casting resins are described for instance in German published, non-prosecuted patent application 26 42 465 (pp. 4–9, in particular examples 1–4), and in European patent disclosure EP 0 039 017 and U.S. Pat. No. 4,365,052 (pp. 2–5, in particular examples 1–8 appearing in both the EP and U.S. patents). The disclosures of those documents are hereby expressly incorporated by reference.

Pyrogenic silicic acid is for instance used as the thixotropic agent. The thixotropic agent is used to thicken the epoxy casting resin, so as to reduce the sedimentation of the luminous substance pigment powder. The flow and wetting properties are also adjusted for processing the casting resin

CaF_2 is preferably used as a mineral diffusor for optimizing the luminous pattern of the component.

Glycol ether is for instance suitable as a processing adjuvant. It improves the compatibility between the epoxy casting resin and the luminous substance pigment powder and is thus used to stabilize the dispersion of luminous substance pigment powder and epoxy casting resin. To that end, surface modifiers based on silicone can also be employed.

The hydrophobic agent, such as liquid silicone wax, is also used to modify the pigment surface; in particular, the compatibility and wettability of the inorganic pigment surface is improved with the organic resin.

The adhesion promoter, such as functional alkoxysiloxane, improves the adhesion between the pigments and the epoxy resin in the cured state of the casting

composition. As a result it is attained that the boundary face between the epoxy resin and the pigments will not rupture, for instance in response to temperature fluctuations. Gaps between the epoxy resin and the pigments would cause light losses in the component.

The epoxy casting resin, preferably with a reactive triple oxiran ring, preferably includes a monofunctional and/or multifunctional epoxy casting resin system (≧80% by weight, such as bisphenol-A-diglycidyl ether), a reactive diluent (≦10% by weight, such as aromatic monoglycidyl ether), a multifunctional alcohol (≦5% by weight), a degassing agent based on silicone (≦1% by weight), and a decolorizing component to adjust the color number (≦1% by weight).

In accordance with another feature of the invention, the luminous substance pigments are substantially spherical particles or flakelike particles. The tendency to clumping of such pigments is advantageously very slight. The H_2O content is below 2%.

In the production and processing of epoxy casting resin components with inorganic luminous substance pigment powders, in general not only wetting but also sedimentation problems occur. Especially luminous substance pigment powders with d_{50}≦5 μm have a strong tendency to clumping. In the last-named composition of the casting composition, the luminous substance pigments, with the above-indicated particle size, can advantageously be substantially free of clumps and can be dispersed homogeneously in the epoxy casting resin. This dispersion is stable even under long-term storage of the casting composition. Essentially no problems of wetting and/or sedimentation occur.

In accordance with a further feature of the invention, the luminous substance pigments are particles of Ce-doped garnets, such as, particularly, YAG:Ce particles. An advantageous dopant concentration is 1%, for example, and an advantageous luminous substance concentration is 12%, for example. The preferred high-purity luminous substance pigment powder also advantageously has an iron content of ≦5 ppm. A high iron content leads to high light losses in the component. The luminous substance pigment powder is highly abrasive. The iron content in the casting composition can therefore rise considerably during production. Iron contents in the casting composition <20 ppm are advantageous.

The inorganic luminous substance YAG:Ce has the particular advantage, among others, that this involves insoluble color pigments with an index of refraction of approximately 1.84. As a result, along with the wavelength conversion, dispersion and scattering effects occur that lead to good mixing of blue diode emissions with yellow converter radiation.

It is also especially advantageous that the luminous substance concentration in the epoxy resin when inorganic luminous substance pigments are used is not limited by the solubility, as is the case for organic colorants.

For further reduction of clumping, the luminous substance pigments may advantageously be provided with a silicone coating.

With the above and other objects in view there is also provided, in accordance with the invention, a method of producing a wavelength-converting casting composition, for converting a wavelength of ultraviolet, blue or green light emitted by an electroluminescent component, the method which comprises:

providing a base of transparent epoxy casting resin;

providing a luminous substance pigment powder of luminous substance pigments from a phosphorous group having the general formula $A_3B_5X_{12}$:M;

tempering the luminous substance pigment powder at a temperature of ≧200° C. and subsequently mixing the tempered pigment powder with the epoxy casting resin.

Tempering is preferably effected for approximately ten hours. As a result, again the tendency to clumping can be reduced.

As an alternative or in addition for this purpose, the luminous substance pigment powder, before being mixed with the epoxy casting resin, can be slurried in a high-boiling alcohol and subsequently dried. A further possibility for reducing clumping is to add a hydrophobic silicone wax to the luminous substance pigment powder before the powder is mixed with the epoxy casting resin. Surface stabilization of the phosphors by heating the pigments in the presence of glycol ethers, for instance for 16 hours at T>60° C., is especially advantageous.

To avoid problematic contamination upon dispersal of the luminous substance pigments, caused by abrasion, reaction vessels, agitators and dispersing devices as well as rolling mechanisms of glass, corundum, carbide and nitride materials as well as especially hardened types of steel are used. Clump-free luminous substance dispersions are also obtained by ultrasonic methods or by the use of screens and glass ceramic frits.

An especially preferred inorganic luminous substance for producing optoelectronic components that light up white is the phosphorous YAG:Ce ($Y_3Al_5O_{12}:Ce^{3+}$). This phosphorous can be especially simply mixed with transparent epoxy casting resins conventionally used in LED technology. Also conceivable as luminous substances are other garnets, doped with rare earths, such as $Y_3Ga_5O_{12}:Ce^{3+}$, $Y(Al,Ga)_5O_{12}:Ce^{3+}$, and $Y(Al,Ga)_5O_{12}:Tb^{3+}$.

To generate mixed-colored light, the thiogallates doped with rare earths are moreover especially suitable, examples being $CaGa_2S_4:Ce^{3+}$ and $SrGa_2S_5:Ce^{3+}$. Once again, the use of aluminates doped with rare earths, such as $YAlO_3:Ce^{3+}$, $YGaO_3:Ce^{3+}$, $Y(Al,Ga)O_3:Ce^{3+}$, and orthosilicates doped with rare earths, $M_2SiO_5:Ce^{3+}$ (M:Sc,Y,Sc), such as $Y_2SiO_5:Ce^{3+}$ is conceivable. In all the yttrium compounds, the yttrium can in principle also be replaced with scandium or lanthanum.

Therefore, in the phosphorous group $A_3B_5X_{12}$:M, the variables may stand for the following exemplary elements: A=Y, Ca, Sr; B=Al, Ga, Si; X=O, S; and M=Ce^{3+}, Tb^{3+}. The variables can represent a single one of the listed exemplary elements. Alternatively, the variables can represent a mixture of two or more of the listed exemplary elements.

Preferably, the casting composition according to the invention is used in a radiation-emitting semiconductor body, in particular with an active semiconductor layer or semiconductor layer sequence of $Ga_xIn_{1-x}N$ or $Ga_xAl_{1-x}N$, which in operation emits an electromagnetic radiation of the ultraviolet, blue and/or green spectral range. The luminous substance particles in the casting composition convert some of the radiation originating in this spectral range into radiation with a longer wavelength, in such a way that the semiconductor component emits mixed radiation, and in particular mixed-colored light comprising this radiation as well as radiation from the ultraviolet, blue and/or green spectral range. This means for instance that the luminous substance particles spectrally selectively absorb some of the radiation emitted by the semiconductor body and emit in the longer-wave range. Preferably, the radiation emitted by the semiconductor body has a relative maximum intensity at a wavelength lambda λ≦520 nm, and the wavelength range spectrally selectively absorbed by the luminous substance particles is outside this maximum intensity.

It is also advantageously possible for a plurality of different kinds of luminous substance particles, which emit at different wavelengths, to be dispersed in the casting composition. This is preferably achieved by means of different doping in different host lattices. This advantageously makes it possible to generate manifold color mixtures and color temperatures of the light emitted by the component. This is especially of interest for LEDs capable of emitting full color.

In a preferred use of the casting composition of the invention, a radiation-emitting semiconductor body (such as an LED chip) is at least partly enclosed by the casting composition. The casting composition is preferably simultaneously used as a component envelope (housing). The advantage of a semiconductor component in accordance with this embodiment is essentially that conventional production lines used to make conventional LEDs (such as radial LEDs) can be used to produce it. For the component envelope, instead of the transparent plastic used for this purpose in conventional LEDs, the casting composition can simply be employed.

With the casting composition of the invention, it is possible in a simple way, with a single colored light source, particularly an LED with a single semiconductor body that emits blue light, to create mixed-colored and in particular white light. For instance to generate white light with a semiconductor body that emits blue light, some of the radiation emitted by the semiconductor body is converted out of the blue spectral range into the yellow spectral range, which is complementary in color to blue, by means of inorganic luminous substance particles.

The color temperature or color location of the white light can be varied by a suitable choice of the luminous substance, its particle size, and its concentration. In addition, luminous substance mixtures can also be employed, and as a result advantageously the desired tonality of the color of the emitted light can be adjusted very precisely.

Especially preferably, the casting composition is used in a radiation-emitting semiconductor body in which the emitted radiation spectrum has a maximum intensity at a wavelength between 420 nm and 460 nm, and in particular at 430 nm (examples being semiconductor bodies based on $Ga_xAl_{1-x}N$) or 450 nm (such as semiconductor bodies based on $Ga_xIn_{1-x}N$). With such a semiconductor component, nearly all the colors and mixed colors in the CIE chromaticity diagram can advantageously be generated.

Instead of the radiation-emitting semiconductor body of electroluminescing semiconductor material, however, some other electroluminescing material may be used, such as polymer material.

With the objects of the invention is view there is further provided, in accordance with the invention, a light-emitting semiconductor component, comprising:

- a semiconductor body formed of a semiconductor layer sequence and being capable, during an operation of the semiconductor component, of emitting electromagnetic radiation in at least one of an ultraviolet, blue, and green spectral range;
- a wavelength-converting casting composition disposed in a vicinity of the semiconductor body, the casting composition being formed of a transparent epoxy casting resin and an inorganic luminous substance pigment powder dispersed in the transparent epoxy resin, the pigment powder comprising luminous substance pigments from a phosphorous group having the general formula $A_3B_5X_{12}$:M and having grain sizes $\leqq 20$ μm and a mean grain diameter $d_{50} \leqq 5$ μm;
- the luminous substance pigments converting a portion of the radiation originating from the ultraviolet, blue and green spectral range into radiation of a higher wavelength, such that the semiconductor component emits mixed radiation including the higher-wavelength radiation and radiation from at least one of the ultraviolet, blue and green spectral range.

In other words, the casting composition is especially suitable for a light-emitting semiconductor component (for instance an LED), in which the electroluminescing semiconductor body is disposed in a recess of a prefabricated housing, optionally already provided with a leadframe, and the recess is provided with the casting composition. This kind of semiconductor component can be produced in great numbers on conventional production lines. All that is needed, after mounting of the semiconductor body in the housing, is to fill the recess with the casting composition.

A semiconductor component that emits white light can be produced with the casting composition according to the invention advantageously by choosing the luminous substance in such a way that a blue radiation emitted by the semiconductor body is converted into complementary wavelength ranges, in particular blue and yellow, or additive color triads, such as blue, green and red. The yellow or green and red light is generated via the luminous substances. The color tonality (color location in the CIE chromaticity diagram) of the white light thus produced can then be varied by means of a suitable choice of the luminous substance or luminous substances in terms of their mixture and concentration.

To improve the mixing of the radiation emitted by an electroluminescing semiconductor body with the radiation converted by the luminous substance and thus to improve the homogeneity of color of the light emitted by the component, in an advantageous feature of the casting composition according to the invention a blue-luminescing colorant, which attenuates a so-called directional characteristic of the radiation emitted by the semiconductor body. The term "directional characteristic" is understood to mean that the radiation emitted by the semiconductor body has a preferential emission direction.

A semiconductor component according to the invention that emits white light, with an electroluminescing semiconductor body emitting blue light, can be especially preferably achieved by admixing the inorganic luminous substance YAG:Ce ($Y_3Al_5O_{12}:Ce^{3+}$) with the epoxy resin used for the casting composition. Some of the blue radiation emitted by the semiconductor body is shifted by the inorganic luminous substance ($Y_3Al_5O_{12}:Ce^{3+}$) into the yellow spectral range and thus into a wavelength range that is complementary in color to the color blue. The color tonality (color location in the CIE chromaticity diagram) of the white light can then be varied by means of a suitable choice of the colorant concentration.

In addition, light-scattering particles, so-called diffusers, can be added to the casting composition. As a result, the color impression and the emission characteristics of the semiconductor component can advantageously be still further optimized.

With the casting composition of the invention, advantageously an ultraviolet radiation emitted by an electroluminescing semiconductor body along with the visible radiation can advantageously be converted into visible light. This markedly increases the brightness of the light emitted by the semiconductor body.

A particular advantage of semiconductor components according to the invention that emit white light, and in which YAG:Ce is used in particular as the luminescence-

converting colorant, is that this luminous substance on excitation with blue light causes a spectral shift of approximately 100 nm between absorption and emission. This leads to a substantial reduction and reabsorption of the light emitted by the luminous substance and thus to a higher light yield. Moreover, YAG:Ce advantageously has high thermal and photochemical (such as UV) stability (substantially higher than organic luminous substances) so that even white-emitting diodes for outdoor use and/or high temperature ranges can be produced.

YAG:Ce has by now proved itself to be the best-suitable luminous substance in terms of reabsorption, light yield, thermal and photochemical stability, and processability. However, the use of other Ce-doped phosphors, in particular Ce-doped types of garnet, is also conceivable.

The wavelength conversion of the primary radiation is determined by the crystal field cleavage of the active transition metal centers in the host lattice. By substituting Gd and/or Lu for Y, or Ga for Al in the $Y_3Al_5O_{12}$ garnet lattice, the emission wavelengths can be shifted in various ways, and this can also be done by the type of doping. By substituting Eu^{3+} and/or Cr^{3+} for Ce^{3+} centers, corresponding shifts can be brought about. Corresponding dopings with Nd^{3+} and Er^{3+} even make it possible, because of the greater ion radii and thus reduced crystal field cleavage, to make components that emit infrared (IR) light.

Other features which are considered as characteristic for the invention are set forth in the appended claims.

Although the invention is illustrated and described herein as embodied in a wavelength-converting casting composition, its use, and method for its production, it is nevertheless not intended to be limited to the details shown, since various modifications and structural changes may be made therein without departing from the spirit of the invention and within the scope and range of equivalents of the claims.

The construction and method of operation of the invention, however, together with additional objects and advantages thereof will be best understood from the following description of specific embodiments when read in connection with the accompanying drawings.

BRIEF DESCRIPTION OF THE DRAWINGS

FIG. **1** is a schematic sectional view of a first semiconductor component with a casting composition according to the invention;

FIG. **2** is a schematic sectional view of a second semiconductor component with a casting composition according to the invention;

FIG. **3** is a schematic sectional view of a third semiconductor component with a casting composition according to the invention;

FIG. **4** is a schematic sectional view of a fourth semiconductor component with a casting composition according to the invention;

FIG. **5** is a schematic sectional view of a fifth semiconductor component with a casting composition according to the invention;

FIG. **6** is a graph of an emission spectrum of a semiconductor body that emits blue light, with a layer sequence on the basis of GaN;

FIG. **7** is a graph of the emissions spectra of two semiconductor components with a casting composition according to the invention, which emit white light; and

FIG. **8** is a graph of the emissions spectra of further semiconductor components that emit white light.

DESCRIPTION OF THE PREFERRED EMBODIMENTS

Reference is now had to the figures of the drawing in which elements that are identical or that function identically are identified by the same reference numerals throughout.

In the light-emitting semiconductor component of FIG. **1**, the semiconductor body **1** is secured by its back-side contact **11** to a first electrical terminal **2** by means of an electrically conductive joining means such as a metal solder or an adhesive. The front-side contact **12** is joined to a second electrical terminal **3** by means of a bond wire **14**.

The free surfaces of the semiconductor body **1** and portions of the electrical terminals **2** and **3** are enclosed directly by a hardened, wavelength-converting casting or potting composition **5**. The casting composition preferably has the following: epoxy casting resin 80 to 90% by weight, luminous substance pigments (YAG:Ce) ≦15% by weight, diethylene glycol monomethyl ether ≦2% by weight, Tegopren a processing adjuvant (additive for keeping the surface of the resin free from bubbles, craters and similar faults) 6875-45≦2% by weight, Aerosil a thixotropic agent 200≦5% by weight.

The exemplary embodiment of a semiconductor component according to the invention shown in FIG. **2** differs from that of FIG. **1** in that the semiconductor body **1** in portions of the electrical terminals **2** and **3** are enclosed not by a wavelength-converting potting mass but by a transparent envelope **15**. The transparent envelope **15** does not cause any change in the wavelength of the radiation emitted by the semiconductor body **1** and for instance comprises an epoxy, silicone or acrylate resin conventionally used in LED technology, or some other suitable radiation-permeable material, such as inorganic glass.

A layer **4** is applied to the transparent envelope **15**. The layer **4** comprises a wavelength-converting casting composition and, as shown in FIG. **2**, covers the entire surface of the envelope **15**. It is equally conceivable for the layer **4** to cover only a portion of the surface. The layer **4** for instance comprises a transparent epoxy resin which is mixed with luminous substance particles **6**. Once again, for a semiconductor component that emits white light, YAG:Ce is preferred as the luminous substance.

FIG. **3** illustrates a particularly advantageous and preferred embodiment of the invention. The first and second electrical terminals **2**, **3** are embedded in an opaque, and optionally prefabricated, basic housing **8** that has a recess **9**. The term "prefabricated" is understood to mean that the basic housing **8** is already finished at the terminals **2**, **3**, for instance by means of injection molding, before the semiconductor body is mounted on the terminal **2**. The basic housing **8**, by way of example, is formed of opaque plastic, and in terms of its form the recess **9** is embodied as a reflector **17** for the radiation emitted by the semiconductor body in operation (the reflection optionally being achieved by means of suitable coating of the inside walls of the recess **9**). Such basic housings **8** are used in particular for LEDs that are surface-mounted on printed circuit boards. They are applied, before mounting of the semiconductor body, to a conductor strip (lead frame) that has the electrical terminals **2**, **3**, the application for instance being done by injection molding.

The recess **9** is filled with a casting composition **5**, whose composition is equivalent to that given above in conjunction with the description of FIG. **1**.

FIG. **4** shows a so-called radial diode. Here, the electroluminescing semiconductor body **1** is secured, for instance by

soldering or adhesive bonding, in a part **16**, embodied as a reflector, of the first electrical terminal **2**. Such housing constructions are known in LED technology and therefore require no further description here. The free surfaces of the semiconductor body **1** are covered directly by a is casting composition **5** containing luminous substance particles **6**, and the casting composition in turn is surrounded by a further transparent housing envelope **10**.

It will be appreciated by those skilled in the art that, in the construction of FIG. **4** as well, analogously to the component of FIG. **1**, an integral envelope comprising hardened casting composition **5** with luminous substance particles **6**, may also be used.

In the exemplary embodiment of FIG. **5**, a layer **4** (see the list of materials given above) is coated directly on the semiconductor body **1**. The semiconductor body **1** and portions of the electrical terminals **2**, **3** are enclosed by a further transparent housing envelope **10**. The latter causes no change in wavelength of the radiation that has passed through the layer **4**, and it is made for instance from a transparent epoxy resin that is usable in LED technology, or from glass.

Such semiconductor bodies **1** provided with a layer **4** and without an envelope can naturally advantageously be used in all the housing constructions known from LED technology (such as SMD housings, and radial housings; see FIG. **4**).

In all the components described above, in order to optimize the color impression of the light emitted and to adapt the emission characteristics, the casting composition **5**, optionally the transparent envelope **15**, and/or optionally the further transparent envelope **10** may have light-scattering particles, advantageously so-called diffusers. Examples of such diffusers are mineral fillers, in particular CaF_2, TiO_2, SiO_2, $CaCO_3$, or $BaSO_4$, or organic pigments. These materials can easily be added to epoxy resins. FIGS. **6–8** illustrate emissions spectra. FIG. **6** refers to a semiconductor body that emits blue light (luminescence maximum at λ~430 nm) and FIGS. **7** and **8** refer to semiconductor components that emit white light.. In each case, the wavelength λ is plotted in nm on the abscissa, and a relative electroluminescence (EL) intensity is plotted on the ordinate.

Of the radiation emitted by the semiconductor body in FIG. **6**, only some is converted into a longer-wavelength range, so that white light is created as the mixed color. The dashed line **30** in FIG. **7** represents an emissions spectrum of a semiconductor component which emits radiation comprising two complementary wavelength ranges (blue and yellow) and thus emits combined white light. The emissions spectrum here has one maximum each at wavelengths between approximately 400 and approximately 430 nm (blue) and between approximately 550 and 580 nm (yellow). The solid line **31** represents the emissions spectrum of a semiconductor component that mixes the color white from three wavelength ranges (additive color triad comprising blue, green and red). The emissions spectrum here has one maximum each for the wavelengths of approximately 430 nm (blue), approximately 500 nm (green) and approximately 615 nm (red).

FIG. **8** shows an emissions spectrum of a white-emitting semiconductor component, which is provided with a semiconductor body that transmits an emissions spectrum as shown in FIG. **6** and in which YAG:Ce is used as the luminous substance. Of the radiation shown in FIG. **6** emitted by the semiconductor body, only some is converted into a longer-wavelength range, so that white light is created as a mixed color. The variously dashed lines **32–33** of FIG. **8** represent emissions spectra of semiconductor components according to the invention, in which the epoxy resin of the casting composition **5** has different YAG:Ce concentrations. Each emissions spectrum has one maximum intensity between lambda=420 nm and lambda=430 nm (i.e., in the blue spectrum), and between lambda=520 nm and lambda=545 nm (i.e., in the green spectrum). The emission bands having the longer-wavelength maximum intensity are predominantly located in the yellow spectral range. The graph of FIG. **8** shows that in the semiconductor component of the invention, the CIE color location of the white light can be varied in a simple way by varying the luminous substance concentration in the epoxy resin.

While the foregoing specification refers specifically to a semiconductor body, for example LED chips or laser diode chips, the invention is not in the least restricted to these embodiments. The term may also be understood to mean a polymer LED, for instance, that emits an equivalent radiation spectrum.

We claim:

1. A wavelength-converting casting composition, for converting a wavelength of ultraviolet, blue or green light emitted by an electroluminescent component, comprising:

a transparent epoxy casting resin;

an inorganic luminous substance pigment powder dispersed in said transparent resin, said pigment powder comprising luminous substance pigments from Ce-doped phosphors; and

said luminous substance pigments having grain sizes $\leqq 20$ μm and a mean grain diameter $d_{50} \leqq 5$ μm.

2. The casting composition according to claim **1**, wherein said luminous substance pigments are substantially spherical particles.

3. The casting composition according to claim **1**, wherein said luminous substance pigments are flakelike particles.

4. The casting composition according to claim **1**, wherein the mean grain diameter d_{50} of said luminous substance pigments is between one and two micrometers.

5. The casting composition according to claim **1**, which comprises the following components:

a) epoxy casting resin $\geqq 60\%$ by weight;

b) luminous substance pigments >0 and $\leqq 25\%$ by weight;

c) thixotropic agent >0 and $\geqq 10\%$ by weight;

d) mineral diffusor >0 and $\leqq 10\%$ by weight;

e) processing adjuvant >0 and $\geqq 3\%$ by weight;

f) hydrophobic agent >0 and $\leqq 3\%$ by weight; and

g) adhesion promoters >0 and $\leqq 2\%$ by weight.

6. The casting composition according to claim **1**, wherein said Ce-doped phosphors are garnets.

7. The casting composition according to claim **1**, wherein said Ce-doped phosphors are YAG:Ce based particles.

8. The casting composition according to claim **1**, which comprises a content of iron $\leqq 20$ ppm.

9. The casting composition according to claim **1**, wherein said luminous substance pigments are formed with a silicon coating.

10. A light-emitting semiconductor component, comprising:

a semiconductor body formed of a semiconductor layer sequence and being capable, during an operation of the semiconductor component, of emitting electromagnetic radiation in at least one of an ultraviolet, blue, and green spectral range;

a wavelength-converting casting composition disposed in a vicinity of said semiconductor body, said casting

composition being formed of a transparent epoxy casting resin and an inorganic luminous substance pigment powder dispersed in said transparent resin, said pigment powder comprising first luminous substance pigments from Ce-doped phosphors and having grain sizes $\leqq 20$ μm and a mean grain diameter $d_{50} \leqq 5$ μm;

said luminous substance pigments converting a portion of the radiation originating from the at least one of the ultraviolet, blue and green spectral range into radiation of a higher wavelength, such that the semiconductor component emits mixed radiation including the higher-wavelength radiation and radiation from the at least one of the ultraviolet, blue and green spectral range.

11. The light-emitting semiconductor component according to claim **10**, wherein said casting composition encloses at least a part of said semiconductor body.

12. The light-emitting semiconductor component according to claim **10**, wherein said semiconductor body is adapted to emit radiation in a blue spectral range having a maximum luminescence intensity at a wavelength between 420 nm and 460 nm.

13. The light-emitting semiconductor component according to claim **10**, which further comprises an opaque base housing having a recess formed therein, said semiconductor body being disposed in said recess and said recess being at least partially filled with said casting composition.

14. The light-emitting semiconductor component according to claim **10**, wherein said inorganic luminous substance pigment powder further comprises additional luminous substance pigments that differ from said first luminous substance pigments in respect to a host lattice distribution and a type and extent of doping.

15. The light-emitting semiconductor component according to claim **10**, wherein said semiconductor body is a blue light emitting semiconductor body, and said Ce-doped phosphor comprises types of garnet adapted to shift some of the blue light emitted by said semiconductor body into a yellow spectral range, whereby the semiconductor component emits white light.

16. The light-emitting semiconductor component according to claim **10**, wherein said semiconductor body is a blue light emitting semiconductor body, and luminous substance pigment powder shifts some of the blue light emitted by said semiconductor body into a green and red spectral range, whereby the semiconductor component emits white light.

* * * * *

UNITED STATES PATENT AND TRADEMARK OFFICE

CERTIFICATE OF CORRECTION

PATENT NO. : 6,245,259 B1 Page 1 of 2
DATED : June 12, 2001
INVENTOR(S) : Klaus Höhn, Alexandra Debray, Peter Schlotter, Ralf Schmidt and Jürgen Schneider

It is certified that error appears in the above-identified patent and that said Letters Patent is hereby corrected as shown below:

Title page,
References Cited,
U.S. PATENT DOCUMENTS, 3,573,568 change Patent "4/1971" to -- 6/1969 --
FOREIGN PATENT DOCUMENTS, change Patent "90 13 615" to -- 90 13 615.2 --

ABSTRACT,
After 'sizes", change "≦" to -- ≤ --
After "d_{50}", change "≦" to -- ≤ --

Column 2,
Line 32, change "≧" to -- ≥ --

Column 3,
Lines 10, 11-13, 23 and 38, change "≦" to -- ≤ --

Column 4,
Line 2, change "≧" to -- ≥ --
Line 10, insert -- point -- after "boiling"
Line 65, change "≦" to -- ≤ --

Column 5,
Lines 66 and 67, change "≦" to -- ≤ --
Line 51, change "is" to -- in --

UNITED STATES PATENT AND TRADEMARK OFFICE

CERTIFICATE OF CORRECTION

PATENT NO. : 6,245,259 B1 Page 2 of 2
DATED : June 12, 2001
INVENTOR(S) : Klaus Höhn, Alexandra Debray, Peter Schlotter, Ralf Schmidt and Jürgen Schneider

It is certified that error appears in the above-identified patent and that said Letters Patent is hereby corrected as shown below:

Column 8,
Lines 17, 17, 21 and 22, change "≦" to -- ≤ --

Column 9,
Line 5, delete "is"

Column 10,
Lines 30 and 31, change "≦" to -- ≤ --

Column 10, claim 5,
Lines 42, 44 and 46, change "≧" to -- ≥ --
Lines 43, 45, 47 and 48, change "≦" to -- ≤ --

Column 10, claim 8,
Change "≦" to -- ≤ --

Column 11, claim 10,
Line 6, change "≦" to -- ≤ --

Signed and Sealed this

Twenty-sixth Day of February, 2002

Attest:

Attesting Officer

JAMES E. ROGAN
Director of the United States Patent and Trademark Office

B

US006277301B1

(12) **United States Patent**
Höhn et al.

(10) **Patent No.: US 6,277,301 B1**
(45) **Date of Patent: Aug. 21, 2001**

(54) **METHOD OF PRODUCING A WAVELENGTH-CONVERTING CASTING COMPOSITION**

(75) Inventors: **Klaus Höhn**, Taufkirchen; **Alexandra Debray**, Regensburg; **Peter Schlotter**, Freiburg; **Ralf Schmidt**, Vörstetten; **Jürgen Schneider**, Kirchzarten, all of (DE)

(73) Assignee: **Osram Opto Semiconductor, GmbH & Co. oHG**, Regensburg (DE)

(*) Notice: Subject to any disclaimer, the term of this patent is extended or adjusted under 35 U.S.C. 154(b) by 0 days.

(21) Appl. No.: **09/536,564**

(22) Filed: **Mar. 28, 2000**

Related U.S. Application Data

(62) Division of application No. 09/082,205, filed on May 20, 1998, now Pat. No. 6,066,861, which is a continuation of application No. PCT/DE97/02139, filed on Sep. 22, 1997.

(30) **Foreign Application Priority Data**

Sep. 20, 1996 (DE) 196 38 667

(51) **Int. Cl.**[7] **C09K 11/02**
(52) **U.S. Cl.** ..... **252/301.36**; 252/301.4 R
(58) **Field of Search** ..... 252/301.36, 301.4 R

(56) **References Cited**

U.S. PATENT DOCUMENTS

3,453,604	7/1969	Geusic et al.	340/173
3,510,732	5/1970	Amans	317/234
3,529,200	9/1970	Potter	313/108

(List continued on next page.)

FOREIGN PATENT DOCUMENTS

26 42 465	3/1978	(DE) .
38 04 293 A1	8/1989	(DE) .
90 13 615.2	1/1991	(DE) .
0 039 017 B1	11/1981	(EP) .

(List continued on next page.)

OTHER PUBLICATIONS

Siemems Components 29.7/8 1991, pp. 147–149.
Drafts of the Society for the Study of Fluorescent Materials, pp. 5–14.
Decision on Trial 11520/90 concerning JP5–152609.
Applied Physics Letters, "Candela–class high–brightness InGaN/A1GaN double–heterostructure blue–light–emitting diodes", Mar. 28, 1994, 64 (13), pp.1687–1689, Nakamura et al.
J. Applied Physics, "Large–band gap SiC, III–V nitride, and II–VI Zn–Se–based semiconductor device technologies", Aug. 1, 1994, 76 (3), pp.1363–1398, Morkoc et al.
J. Vac. Sci. Technol., InGaN/A1GaN blue–light emitting diode, May/Jun. 1995, A13 (3), pp. 705–710, Nakamura.
Journal of IES (Illuminating Engineering Soc.), "Improved color rendition in high pressure mercury vapor lamps", Jan. 1977, pp. 89–91, Hoffman.
Physical Review, "Frequency Upconversion in YF_3:Yb^{3+}, Tm3+", Apr. 15, 1971, B3 (8), pp. 2698–2705, Ostermayer et al.
J. Applied Physics, "Efficiency of Red, Green, and Blue Infrared–to–Visible Conversion Sources", Apr. 1971, pp. 1958–1960, Geusic et al.
English abstract of Japanese Laid–open Patent 10–179471, Jul. 17, 1989.

(List continued on next page.)

Primary Examiner—C. Melissa Koslow
(74) *Attorney, Agent, or Firm*—Fish & Richardson, P.C.

(57) **ABSTRACT**

The wavelength-converting casting composition is based on a transparent epoxy casting resin with a luminous substance admixed. The composition is used in an electroluminescent component having a body that emits ultraviolet, blue or green light. An inorganic luminous substance pigment powder with luminous substance pigments is dispersed in the transparent epoxy casting resin. The luminous substance is a phosphorous group of the general formula $A_3B_5X_{12}$:M, and the luminous substance pigments have particle sizes $\leqq 20$ μm and a mean grain diameter $d_{50} \leqq 5$ μm.

19 Claims, 4 Drawing Sheets

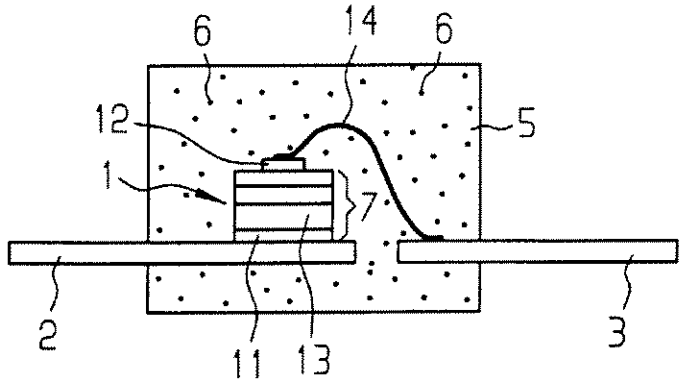

U.S. PATENT DOCUMENTS

3,573,568	4/1971	Siegel	313/108
3,593,055	7/1971	Geusic	313/108 D
3,654,463	4/1972	Geusic et al.	250/71 R
3,691,482	9/1972	Pinnow et al.	332/7.51
3,699,478	10/1972	Pinnow et al.	332/7.51
3,819,974	6/1974	Stevenson et al.	313/108 D
3,932,881	1/1976	Mita	357/17
3,942,185	3/1976	Lebailly	357/17
4,146,790	3/1979	Goetzberger et al.	250/336
4,173,495	11/1979	Rapp et al.	136/89 PC
4,262,206	4/1981	Viehmann	250/483
4,298,820	11/1981	Bongers et al.	313/463
4,431,941	2/1984	Roy et al.	313/487
4,495,514	1/1985	Lawrence et al.	357/67
4,550,256	10/1985	Berkstresser et al.	250/483.1
4,599,537	7/1986	Yamashita	313/501
4,716,337	12/1987	Huiskes et al.	313/487
4,727,283	2/1988	Van Kemenade et al.	313/487
4,734,619	3/1988	Havel	313/510
4,818,983	4/1989	Hara et al.	340/794
5,019,746	5/1991	Merg	313/512
5,035,513	7/1991	Fehrenbach et al.	374/161
5,120,214	6/1992	Tokarlin	428/690
5,184,114	2/1993	Brown	340/701
5,369,289	11/1994	Tamaki et al.	257/99
5,471,113	11/1995	DeBacker et al.	313/487
5,535,230	7/1996	Abe	372/43
5,602,418	2/1997	Imai et al.	257/627
5,652,438	7/1997	Sassa et al.	257/94
5,656,832	8/1997	Ohba et al.	257/190
5,670,798	9/1997	Schetzina	257/96
5,707,549 *	1/1998	Matsukiyo et al.	252/301.4 R
5,959,316	9/1999	Lowery	257/98
5,998,925 *	12/1999	Shimizu et al.	313/503
6,078,063	6/2000	Nakamura et al.	257/96

FOREIGN PATENT DOCUMENTS

0486052A1	5/1992	(EP) .
1332462	10/1973	(GB) .
2053953	2/1981	(GB) .
1589964	5/1981	(GB) .
46-7462	12/1971	(JP) .
47-17684	9/1972	(JP) .
49-1221	1/1974	(JP) .
49-112577	10/1974	(JP) .
50-43913	4/1975	(JP) .
52-45181	10/1977	(JP) .
54-41660	5/1979	(JP) .
59-50455	4/1984	(JP) .
63-280467	11/1988	(JP) .
4-63162	5/1992	(JP) .
4-63163	5/1992	(JP) .
5-152609	6/1993	(JP) .
5-63068	8/1993	(JP) .
7-99345	4/1995	(JP) .
7-176794	7/1995	(JP) .
8-7614	1/1996	(JP) .
198585/1996	5/1997	(JP) .
244339/1996	5/1997	(JP) .
245381/1996	5/1997	(JP) .
359004/1996	5/1997	(JP) .
2927229	5/1999	(JP) .
98/12757 *	3/1998	(WO) .

OTHER PUBLICATIONS

Translation of Japanese Laid–open Patent 07–176794, Jul. 14, 1995.

Osinski, Marek, A1GaN/InGaN/GaN blue light emitting diode degradation under pulsed current stress, Applied Physics Letter, Aug. 12, 1996, pp. 898–900.

D.J. Robbins: "The Effects of Crystal Field and Temperature on the Photoluminescence Excitation of Ce^{3+}in YAG", J. Electrchem. Soc.: Solid State Science and Technology1979, vol. 126, No. 9, pp. 1550–1555.

Glen A. Slack et al.: "Optical Absorption of $Y_3A_{15}O_{12}$ from 10–to 55000–cm Wave Numbers", Physical Review, vol. 177, No.3, Jan. 15, 1969, pp. 1308–1314.

Shuji Nakamura et al.: "The blue laser diode: GaN based Light emitters and lasers", Springer Vertag, Berlin, 1997, pp. 216–219, 328.

G.. Blasse et al.,: "A New Phosphor for Flying—Spot Cathode–Ray Tubes for Color Television: Yellow Emitting $Y^3Al_5O^{12}$–Ce_{3+}", Applied Physics Letter, vol. 11, No. 2, 15, pp. 53, 54.

B.M.J. Smets: "Phosphors Based On Rare–Earths, A New Era in Fluorescent Lighting", Materials Chemistry and Physics, 16 (1987), pp. 283–299.

Cheo et al: "White Light Emitting glasses", Journal Solid State Chemistry, 1991, pp. 17–29.

Sato et al.: "Full–Color . . . Diode", Jap. J. Applied Physics, vol. 35, (1996), pp. L838–L839.

Siemens Forsch.—Entwichkl.—Ber. Bd (1997), No. 3, p. 162 [Siemens Research and Development Reports], vol. 6.

S.N. Mohammad et al.: "emerging gallium Nitride Based Devices", Proceeding of the IEEE, vol. 83, No. 10, Oct. 1995, pp. 1306–1355.

Blasse, et al., "A New Phosphor for Flying–Spot Cathode–Ray Tubes for Color Television: Yellow–Emitting $Y_3Al_5O_{12}$—Ce^{3+}" *Applied Physics Letters,* vol. 11, No. 2 (1967), pp. 53–55.

* cited by examiner

FIG 1

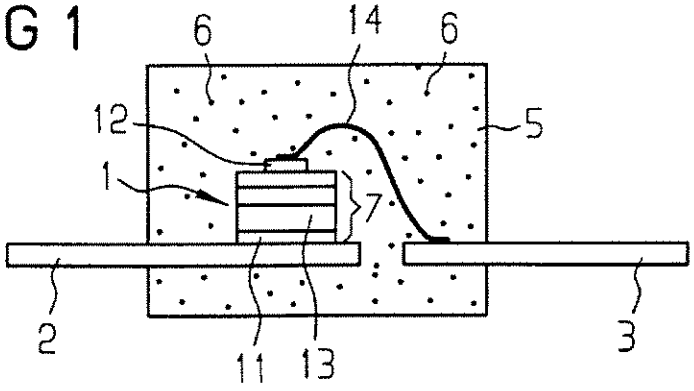

FIG 2

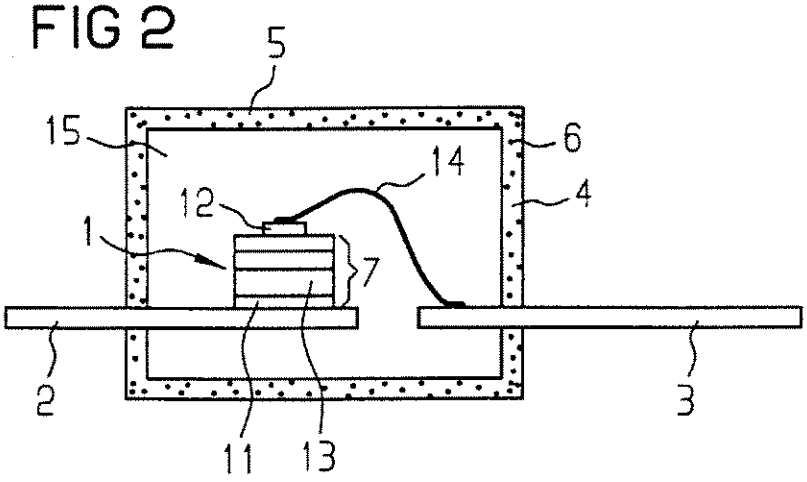

FIG 3

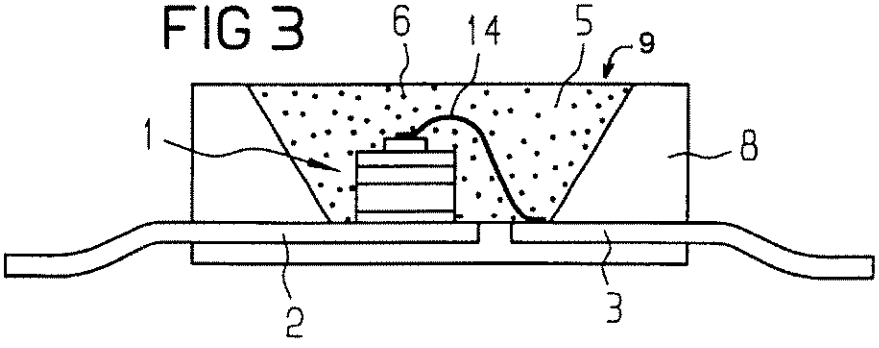

FIG 4

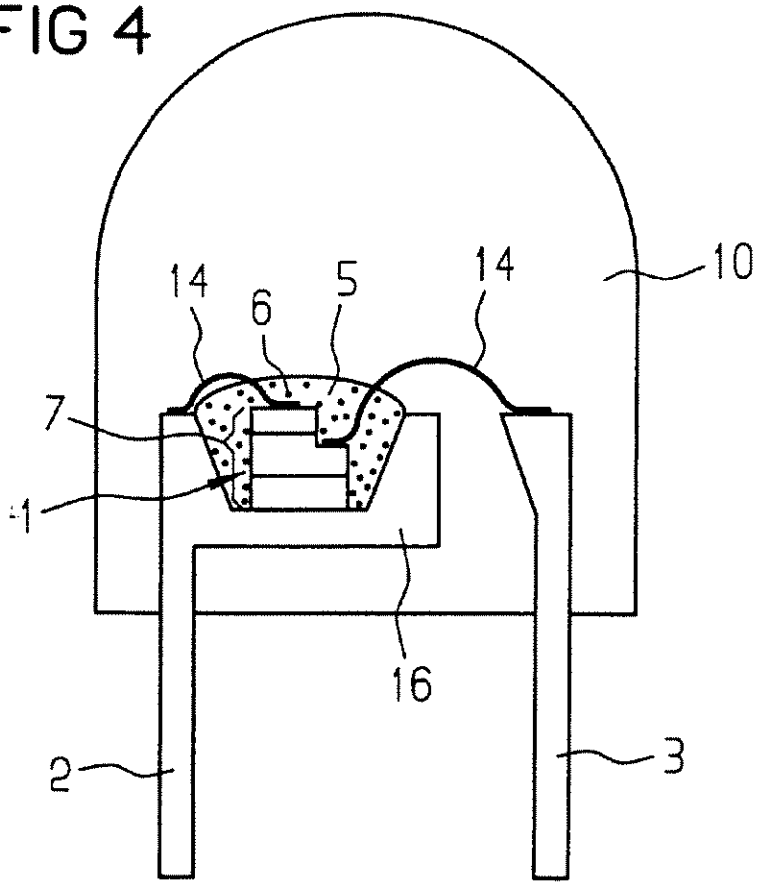

FIG 5

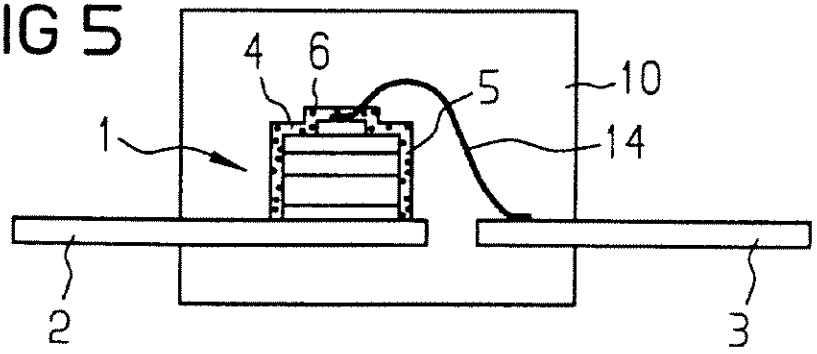

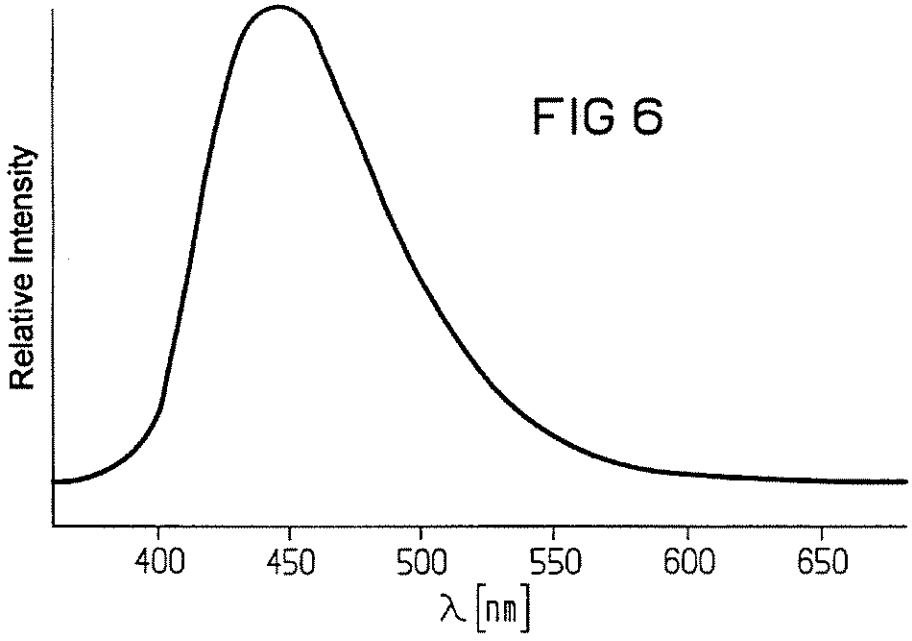
Relative Intensity
400
450
500
550
600
650
λ [nm]

FIG 6

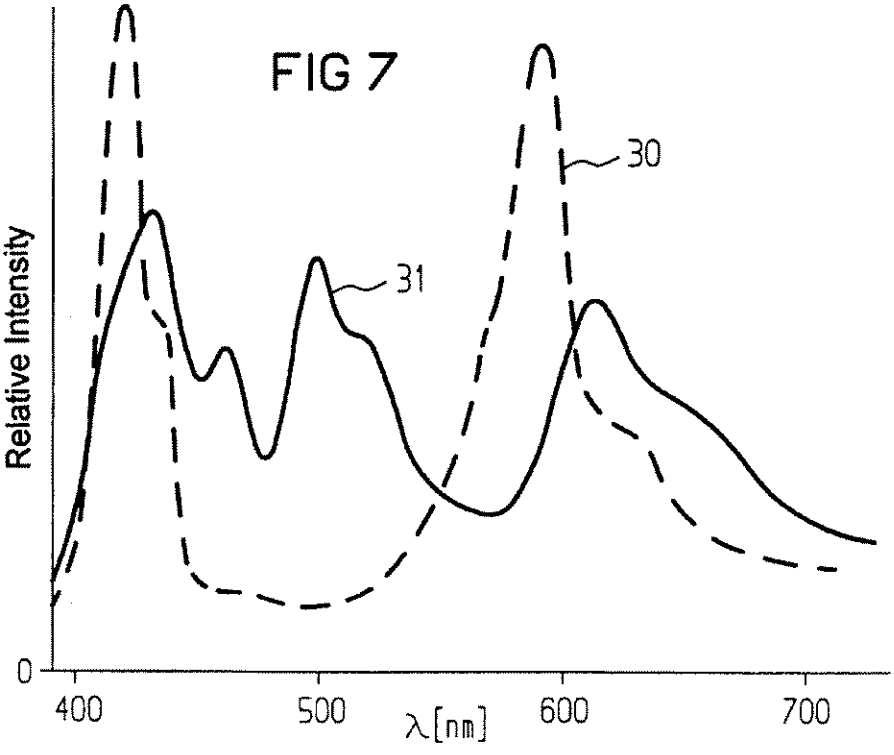
Relative Intensity
0
400
500
600
700
λ [nm]
30
31

FIG 7

FIG 8

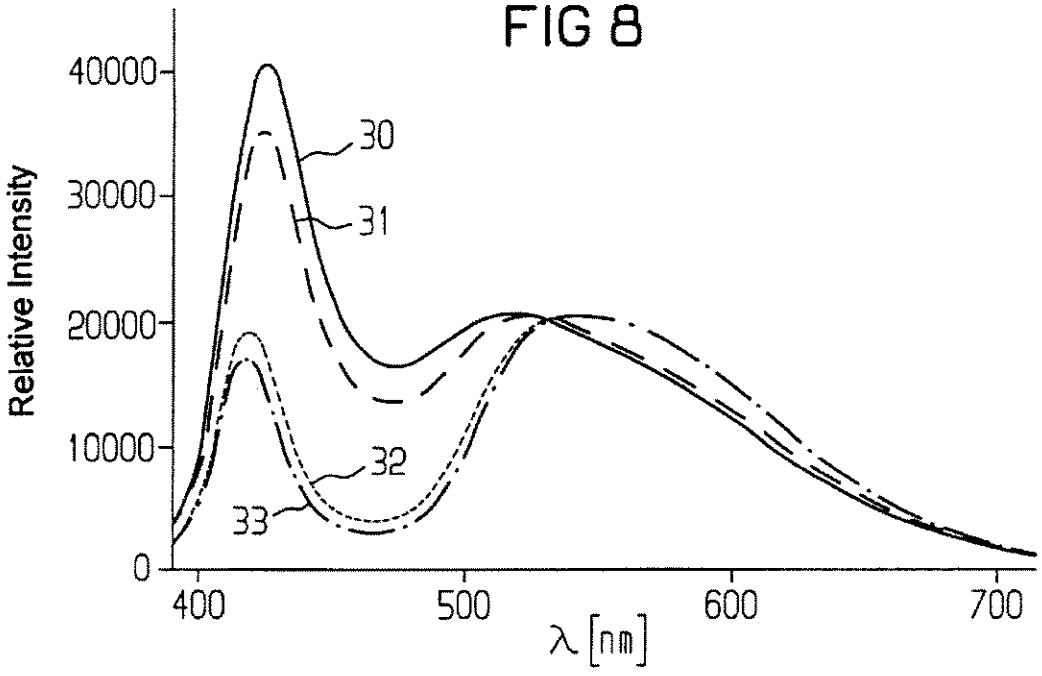
Relative Intensity
40000
30000
20000
10000
0
400
500
600
700
λ [nm]
30
31
32
33

METHOD OF PRODUCING A WAVELENGTH-CONVERTING CASTING COMPOSITION

CROSS-REFERENCE TO RELATED APPLICATION

This is a division of U.S. application Ser. No. 09/082,205, filed May 20, 1998, now U.S. Pat. No. 6,066,861, which was a continuation of copending international application PCT/DE97/02139, filed Sep. 22, 1997, which designated the United States.

BACKGROUND OF THE INVENTION

1. Field of the Invention

The invention relates to a wavelength-converting casting composition based on a transparent epoxy casting resin which is mixed with a luminous substance, for an electroluminescent component having a body that emits ultraviolet, blue or green light.

2. Description of the Related Art

A component of that type has become known, for instance, from German published, non-prosecuted patent application DE 38 04 293. The reference describes an arrangement with an electroluminescent diode or laser diode, in which the emissions spectrum emitted by the diode is shifted toward longer wavelengths, by means of a plastic element mixed with a fluorescing, light-converting, organic colorant. The light emitted by the arrangement as a result has a different color from what the light emitting diode emitted. Depending on the type of colorant added to the plastic, it is possible to produce LED arrays that light up in different colors with one and the same type of light-emitting diode (LED).

In many potential applications for LEDs, such as in display elements in motor vehicle dashboards, illumination in aircraft and automobiles, and in LED displays capable of showing full color, there is an increasing demand for LED arrays with which mixed color light and in particular white light can be generated.

However, the prior art casting compositions of the type referred to at the outset with organic luminous substances exhibit a shift in the color location, that is, the color of the light emitted by the electroluminescent component, under temperature and temperature/humidity stresses.

Japanese patent disclosure JP-07 176 794-A describes a white-light-emitting planar light source, in which two diodes that emit blue light are disposed on one face end of a transparent plate and emit light into the transparent plate. The transparent plate is coated on one of the two opposed main sides with a fluorescing substance that emits light when it is excited with the blue light of the diodes. The light emitted by the fluorescing substance has a different wavelength from the blue light emitted by the diodes. In this known component, it is especially difficult to apply the fluorescing substance in such a way that the light source emits homogeneous white light. Moreover, replicability and mass production presents major problems, because even slight fluctuations in the layer thickness of the fluorescing layer, for instance from irregularities of the surface of the transparent plate, cause a change in the white of the light emitted.

SUMMARY OF THE INVENTION

It is accordingly an object of the invention to provide a wavelength-converting casting mass, which overcomes the

above-mentioned disadvantages of the prior art devices and methods of this general type and with which electroluminescent components can be produced that emit homogeneous mixed-colored light, and which enables mass production at reasonable engineering effort and expense and with maximally replicable component characteristics. The emitted light should be color-stable even under temperature and temperature/humidity stresses. It is a further object to specify a use for the casting mass and a method for producing the composition.

With the foregoing and other objects in view there is provided, in accordance with the invention, a wavelength-converting casting composition, for converting a wavelength of ultraviolet, blue or green light emitted by an electroluminescent component, comprising:

a transparent epoxy casting resin;

an inorganic luminous substance pigment powder dispersed in the transparent epoxy resin, the pigment powder comprising luminous substance pigments from a phosphorous group having the general formula $A_3B_5X_{12}$:M;

the luminous substance pigments having grain sizes $\leqq 20\,\mu m$ and a mean grain diameter $d_{50} \leqq 5\,\mu m$.

In accordance with an added feature of the invention, the mean grain diameter d_{50} of the luminous substance pigments is between one and two micrometers.

Inorganic/mineral luminous substances are extremely stable with regard to temperature and temperature/humidity stresses.

In accordance with an additional feature of the invention, the composition includes the following parts:

a) epoxy casting resin ≧60% by weight;

b) luminous substance pigments >0 and ≦25% by weight;

c) thixotropic agent >0 and ≦10% by weight;

d) mineral diffusor >0 and ≦10% by weight;

e) processing adjuvant >0 and ≦3% by weight;

f) hydrophobic agent >0 and ≦3% by weight; and

g) adhesion promoters >0 and <2% by weight.

Suitable epoxy casting resins are described for instance in German published, non-prosecuted patent application 26 42 465 (pp. 4–9, in particular examples 1–4), and in European patent disclosure EP 0 039 017 and U.S. Pat. No. 4,365,052 (pp. 2–5, in particular examples 1–8 appearing in both the EP and U.S. patents). The disclosures of those documents are hereby expressly incorporated by reference.

Pyrogenic silicic acid is for instance used as the thixotropic agent. The thixotropic agent is used to thicken the epoxy casting resin, so as to reduce the sedimentation of the luminous substance pigment powder. The flow and wetting properties are also adjusted for processing the casting resin

CaF_2 is preferably used as a mineral diffusor for optimizing the luminous pattern of the component.

Glycol ether is for instance suitable as a processing adjuvant. It improves the compatibility between the epoxy casting resin and the luminous substance pigment powder and is thus used to stabilize the dispersion of luminous substance pigment powder and epoxy casting resin. To that end, surface modifiers based on silicone can also be employed.

The hydrophobic agent, such as liquid silicone wax, is also used to modify the pigment surface; in particular, the compatibility and wettability of the inorganic pigment surface is improved with the organic resin.

The adhesion promoter, such as functional alkoxysiloxane, improves the adhesion between the pigments and the epoxy resin in the cured state of the casting composition. As a result it is attained that the boundary face between the epoxy resin and the pigments will not rupture,

for instance in response to temperature fluctuations. Gaps between the epoxy resin and the pigments would cause light losses in the component.

The epoxy casting resin, preferably with a reactive triple oxiran ring, preferably includes a monofunctional and/or multifunctional epoxy casting resin system (≧80% by weight, such as bisphenol-A-diglycidyl ether), a reactive diluent (≦10% by weight, such as aromatic monoglycidyl ether), a multifunctional alcohol (≦5% by weight), a degassing agent based on silicone (≦1% by weight), and a decolorizing component to adjust the color number (≦1% by weight).

In accordance with another feature of the invention, the luminous substance pigments are substantially spherical particles or flakelike particles. The tendency to clumping of such pigments is advantageously very slight. The H_2O content is below 2%.

In the production and processing of epoxy casting resin components with inorganic luminous substance pigment powders, in general not only wetting but also sedimentation problems occur. Especially luminous substance pigment powders with d_{50}≦5 μm have a strong tendency to clumping. In the last-named composition of the casting composition, the luminous substance pigments, with the above-indicated particle size, can advantageously be substantially free of clumps and can be dispersed homogeneously in the epoxy casting resin. This dispersion is stable even under long-term storage of the casting composition. Essentially no problems of wetting and/or sedimentation occur.

In accordance with a further feature of the invention, the luminous substance pigments are particles of Ce-doped garnets, such as, particularly, YAG:Ce particles. An advantageous dopant concentration is 1%, for example, and an advantageous luminous substance concentration is 12%, for example. The preferred high-purity luminous substance pigment powder also advantageously has an iron content of ≦5 ppm. A high iron content leads to high light losses in the component. The luminous substance pigment powder is highly abrasive. The iron content in the casting composition can therefore rise considerably during production. Iron contents in the casting composition <20 ppm are advantageous.

The inorganic luminous substance YAG:Ce has the particular advantage, among others, that this involves insoluble color pigments with an index of refraction of approximately 1.84. As a result, along with the wavelength conversion, dispersion and scattering effects occur that lead to good mixing of blue diode emissions with yellow converter radiation.

It is also especially advantageous that the luminous substance concentration in the epoxy resin when inorganic luminous substance pigments are used is not limited by the solubility, as is the case for organic colorants.

For further reduction of clumping, the luminous substance pigments may advantageously be provided with a silicone coating.

With the above and other objects in view there is also provided, in accordance with the invention, a method of producing a wavelength-converting casting composition, for converting a wavelength of ultraviolet, blue or green light emitted by an electroluminescent component, the method which comprises:

providing a base of transparent epoxy casting resin;

providing a luminous substance pigment powder of luminous substance pigments from a phosphorous group having the general formula $A_3B_5X_{12}$:M;

tempering the luminous substance pigment powder at a temperature of ≧200° C. and subsequently mixing the tempered pigment powder with the epoxy casting resin.

Tempering is preferably effected for approximately ten hours. As a result, again the tendency to clumping can be reduced.

As an alternative or in addition for this purpose, the luminous substance pigment powder, before being mixed with the epoxy casting resin, can be slurried in a high-boiling point alcohol and subsequently dried. A further possibility for reducing clumping is to add a hydrophobic silicone wax to the luminous substance pigment powder before the powder is mixed with the epoxy casting resin. Surface stabilization of the phosphors by heating the pigments in the presence of glycol ethers, for instance for 16 hours at T>60° C., is especially advantageous.

To avoid problematic contamination upon dispersal of the luminous substance pigments, caused by abrasion, reaction vessels, agitators and dispersing devices as well as rolling mechanisms of glass, corundum, carbide and nitride materials as well as especially hardened types of steel are used. Clump-free luminous substance dispersions are also obtained by ultrasonic methods or by the use of screens and glass ceramic frits.

An especially preferred inorganic luminous substance for producing optoelectronic components that light up white is the phosphorous YAG:Ce ($Y_3Al_5O_{12}:Ce^{3+}$). This phosphorous can be especially simply mixed with transparent epoxy casting resins conventionally used in LED technology. Also conceivable as luminous substances are other garnets, doped with rare earths, such as $Y_3Ga_5O_{12}:Ce^{3+}$, $Y(Al,Ga)_5O_{12}:Ce^{3+}$, and $Y(Al,Ga)_5O_{12}:Tb^{3+}$.

To generate mixed-colored light, the thiogallates doped with rare earths are moreover especially suitable, examples being $CaGa_2S_4:Ce^{3+}$ and $SrGa_2S_5:Ce^{3+}$. Once again, the use of aluminates doped with rare earths, such as $YAlO_3:Ce^{3+}$, $YGaO_3:Ce^{3+}$, $Y(Al,Ga)O_3:Ce^{3+}$, and orthosilicates doped with rare earths, $M_2SiO_5:Ce^{3+}$ (M:Sc,Y,Sc), such as $Y_2SiO_5:Ce^{3+}$ is conceivable. In all the yttrium compounds, the yttrium can in principle also be replaced with scandium or lanthanum.

Therefore, in the phosphorous group $A_3B_5X_{12}$:M, the variables may stand for the following exemplary elements: A=Y, Ca, Sr; B=Al, Ga, Si; X=O, S; and M=Ce^{3+}, Tb^{3+}. The variables can represent a single one of the listed exemplary elements. Alternatively, the variables can represent a mixture of two or more of the listed exemplary elements.

Preferably, the casting composition according to the invention is used in a radiation-emitting semiconductor body, in particular with an active semiconductor layer or semiconductor layer sequence of $Ga_xIn_{1-x}N$ or $Ga_xAl_{1-x}N$, which in operation emits an electromagnetic radiation of the ultraviolet, blue and/or green spectral range. The luminous substance particles in the casting composition convert some of the radiation originating in this spectral range into radiation with a longer wavelength, in such a way that the semiconductor component emits mixed radiation, and in particular mixed-colored light comprising this radiation as well as radiation from the ultraviolet, blue and/or green spectral range. This means for instance that the luminous substance particles spectrally selectively absorb some of the radiation emitted by the semiconductor body and emit in the longer-wave range. Preferably, the radiation emitted by the semiconductor body has a relative maximum intensity at a wavelength lambda λ≦520 nm, and the wavelength range spectrally selectively absorbed by the luminous substance particles is outside this maximum intensity.

It is also advantageously possible for a plurality of different kinds of luminous substance particles, which emit at different wavelengths, to be dispersed in the casting

composition. This is preferably achieved by means of different doping in different host lattices. This advantageously makes it possible to generate manifold color mixtures and color temperatures of the light emitted by the component. This is especially of interest for LEDs capable of emitting full color.

In a preferred use of the casting composition of the invention, a radiation-emitting semiconductor body (such as an LED chip) is at least partly enclosed by the casting composition. The casting composition is preferably simultaneously used as a component envelope (housing). The advantage of a semiconductor component in accordance with this embodiment is essentially that conventional production lines used to make conventional LEDs (such as radial LEDs) can be used to produce it. For the component envelope, instead of the transparent plastic used for this purpose in conventional LEDs, the casting composition can simply be employed.

With the casting composition of the invention, it is possible in a simple way, with a single colored light source, particularly an LED with a single semiconductor body that emits blue light, to create mixed-colored and in particular white light. For instance to generate white light with a semiconductor body that emits blue light, some of the radiation emitted by the semiconductor body is converted out of the blue spectral range into the yellow spectral range, which is complementary in color to blue, by means of inorganic luminous substance particles.

The color temperature or color location of the white light can be varied by a suitable choice of the luminous substance, its particle size, and its concentration. In addition, luminous substance mixtures can also be employed, and as a result advantageously the desired tonality of the color of the emitted light can be adjusted very precisely.

Especially preferably, the casting composition is used in a radiation-emitting semiconductor body in which the emitted radiation spectrum has a maximum intensity at a wavelength between 420 nm and 460 nm, and in particular at 430 nm (examples being semiconductor bodies based on $Ga_xAl_{1-x}N$) or 450 nm (such as semiconductor bodies based on $Ga_xIn_{1-x}N$). With such a semiconductor component, nearly all the colors and mixed colors in the CIE chromaticity diagram can advantageously be generated.

Instead of the radiation-emitting semiconductor body of electroluminescing semiconductor material, however, some other electroluminescing material may be used, such as polymer material.

With the objects of the invention is view there is further provided, in accordance with the invention, a light-emitting semiconductor component, comprising:

a semiconductor body formed of a semiconductor layer sequence and being capable, during an operation of the semiconductor component, of emitting electromagnetic radiation in at least one of an ultraviolet, blue, and green spectral range;

a wavelength-converting casting composition disposed in a vicinity of the semiconductor body, the casting composition being formed of a transparent epoxy casting resin and an inorganic luminous substance pigment powder dispersed in the transparent epoxy resin, the pigment powder comprising luminous substance pigments from a phosphorus group having the general formula $A_3B_5X_{12}$:M and having grain sizes $\geqq 20$ μm and a mean grain diameter $d_{50} \geqq 5$ μm;

the luminous substance pigments converting a portion of the radiation originating from the ultraviolet, blue and green spectral range into radiation of a higher wavelength, such that the semiconductor component emits mixed radiation including the higher-wavelength radiation and radiation from at least one of the ultraviolet, blue and green spectral range.

In other words, the casting composition is especially suitable for a light-emitting semiconductor component (for instance an LED), in which the electroluminescing semiconductor body is disposed in a recess of a prefabricated housing, optionally already provided with a leadframe, and the recess is provided with the casting composition. This kind of semiconductor component can be produced in great numbers on conventional production lines. All that is needed, after mounting of the semiconductor body in the housing, is to fill the recess with the casting composition.

A semiconductor component that emits white light can be produced with the casting composition according to the invention advantageously by choosing the luminous substance in such a way that a blue radiation emitted by the semiconductor body is converted into complementary wavelength ranges, in particular blue and yellow, or additive color triads, such as blue, green and red. The yellow or green and red light is generated via the luminous substances. The color tonality (color location in the CIE chromaticity diagram) of the white light thus produced can then be varied by means of a suitable choice of the luminous substance or luminous substances in terms of their mixture and concentration.

To improve the mixing of the radiation emitted by an electroluminescing semiconductor body with the radiation converted by the luminous substance and thus to improve the homogeneity of color of the light emitted by the component, in an advantageous feature of the casting composition according to the invention a blue-luminescing colorant, which attenuates a so-called directional characteristic of the radiation emitted by the semiconductor body. The term "directional characteristic" is understood to mean that the radiation emitted by the semiconductor body has a preferential emission direction.

A semiconductor component according to the invention that emits white light, with an electroluminescing semiconductor body emitting blue light, can be especially preferably achieved by admixing the inorganic luminous substance YAG:Ce ($Y_3Al_5O_{12}:Ce^{3+}$) with the epoxy resin used for the casting composition. Some of the blue radiation emitted by the semiconductor body is shifted by the inorganic luminous substance ($Y_3Al_5O_{12}:Ce^{3+}$) into the yellow spectral range and thus into a wavelength range that is complementary in color to the color blue. The color tonality (color location in the CIE chromaticity diagram) of the white light can then be varied by means of a suitable choice of the colorant concentration.

In addition, light-scattering particles, so-called diffusers, can be added to the casting composition. As a result, the color impression and the emission characteristics of the semiconductor component can advantageously be still further optimized.

With the casting composition of the invention, advantageously an ultraviolet radiation emitted by an electroluminescing semiconductor body along with the visible radiation can advantageously be converted into visible light. This markedly increases the brightness of the light emitted by the semiconductor body.

A particular advantage of semiconductor components according to the invention that emit white light, and in which YAG:Ce is used in particular as the luminescence-converting colorant, is that this luminous substance on excitation with blue light causes a spectral shift of approximately 100 nm between absorption and emission. This leads

to a substantial reduction and reabsorption of the light emitted by the luminous substance and thus to a higher light yield. Moreover, YAG:Ce advantageously has high thermal and photochemical (such as UV) stability (substantially higher than organic luminous substances) so that even white-emitting diodes for outdoor use and/or high temperature ranges can be produced.

YAG:Ce has by now proved itself to be the best-suitable luminous substance in terms of reabsorption, light yield, thermal and photochemical stability, and processability. However, the use of other Ce-doped phosphors, in particular Ce-doped types of garnet, is also conceivable.

The wavelength conversion of the primary radiation is determined by the crystal field cleavage of the active transition metal centers in the host lattice. By substituting Gd and/or Lu for Y, or Ga for Al in the $Y_3Al_5O_{12}$ garnet lattice, the emission wavelengths can be shifted in various ways, and this can also be done by the type of doping. By substituting Eu^{3+} and/or Cr^{3+} for Ce^{3+} centers, corresponding shifts can be brought about. Corresponding dopings with Nd^{3+} and Er^{3+} even make it possible, because of the greater ion radii and thus reduced crystal field cleavage, to make components that emit infrared (IR) light.

Other features which are considered as characteristic for the invention are set forth in the appended claims.

Although the invention is illustrated and described herein as embodied in a wavelength-converting casting composition, its use, and method for its production, it is nevertheless not intended to be limited to the details shown, since various modifications and structural changes may be made therein without departing from the spirit of the invention and within the scope and range of equivalents of the claims.

The construction and method of operation of the invention, however, together with additional objects and advantages thereof will be best understood from the following description of specific embodiments when read in connection with the accompanying drawings.

BRIEF DESCRIPTION OF THE DRAWINGS

FIG. **1** is a schematic sectional view of a first semiconductor component with a casting composition according to the invention;

FIG. **2** is a schematic sectional view of a second semiconductor component with a casting composition according to the invention;

FIG. **3** is a schematic sectional view of a third semiconductor component with a casting composition according to the invention;

FIG. **4** is a schematic sectional view of a fourth semiconductor component with a casting composition according to the invention;

FIG. **5** is a schematic sectional view of a fifth semiconductor component with a casting composition according to the invention;

FIG. **6** is a graph of an emission spectrum of a semiconductor body that emits blue light, with a layer sequence on the basis of GaN;

FIG. **7** is a graph of the emissions spectra of two semiconductor components with a casting composition according to the invention, which emit white light; and

FIG. **8** is a graph of the emissions spectra of further semiconductor components that emit white light.

DESCRIPTION OF THE PREFERRED EMBODIMENTS

Reference is now had to the figures of the drawing in which elements that are identical or that function identically are identified by the same reference numerals throughout.

In the light-emitting semiconductor component of FIG. **1**, the semiconductor body **1** is secured by its back-side contact **11** to a first electrical terminal **2** by means of an electrically conductive joining means such as a metal solder or an adhesive. The front-side contact **12** is joined to a second electrical terminal **3** by means of a bond wire **14**.

The free surfaces of the semiconductor body **1** and portions of the electrical terminals **2** and **3** are enclosed directly by a hardened, wavelength-converting casting or potting composition **5**. The casting composition preferably has the following: epoxy casting resin 80 to 90% by weight, luminous substance pigments (YAG:Ce) ≦15% by weight, diethylene glycol monomethyl ether ≦2% by weight, Tegopren a processing adjuvant (additive for keeping the surface of the resin free from bubbles, craters and similar faults) 6875-45 ≦2% by weight, Aerosil a thixotropic agent 200 ≦5% by weight.

The exemplary embodiment of a semiconductor component according to the invention shown in FIG. **2** differs from that of FIG. **1** in that the semiconductor body **1** in portions of the electrical terminals **2** and **3** are enclosed not by a wavelength-converting potting mass but by a transparent envelope **15**. The transparent envelope **15** does not cause any change in the wavelength of the radiation emitted by the semiconductor body **1** and for instance comprises an epoxy, silicone or acrylate resin conventionally used in LED technology, or some other suitable radiation-permeable material, such as inorganic glass.

A layer **4** is applied to the transparent envelope **15**. The layer **4** comprises a wavelength-converting casting composition and, as shown in FIG. **2**, covers the entire surface of the envelope **15**. It is equally conceivable for the layer **4** to cover only a portion of the surface. The layer **4** for instance comprises a transparent epoxy resin which is mixed with luminous substance particles **6**. Once again, for a semiconductor component that emits white light, YAG:Ce is preferred as the luminous substance.

FIG. **3** illustrates a particularly advantageous and preferred embodiment of the invention. The first and second electrical terminals **2**, **3** are embedded in an opaque, and optionally prefabricated, basic housing **8** that has a recess **9**. The term "prefabricated" is understood to mean that the basic housing **8** is already finished at the terminals **2**, **3**, for instance by means of injection molding, before the semiconductor body is mounted on the terminal **2**. The basic housing **8**, by way of example, is formed of opaque plastic, and in terms of its form the recess **9** is embodied as a reflector **17** for the radiation emitted by the semiconductor body in operation (the reflection optionally being achieved by means of suitable coating of the inside walls of the recess **9**). Such basic housings **8** are used in particular for LEDs that are surface-mounted on printed circuit boards. They are applied, before mounting of the semiconductor body, to a conductor strip (lead frame) that has the electrical terminals **2**, **3**, the application for instance being done by injection molding.

The recess **9** is filled with a casting composition **5**, whose composition is equivalent to that given above in conjunction with the description of FIG. **1**.

FIG. **4** shows a so-called radial diode. Here, the electroluminescing semiconductor body **1** is secured, for instance by soldering or adhesive bonding, in a part **16**, embodied as a reflector, of the first electrical terminal **2**. Such housing constructions are known in LED technology and therefore require no further description here. The free surfaces of the semiconductor body **1** are covered directly by a casting

composition **5** containing luminous substance particles **6**, and the casting composition in turn is surrounded by a further transparent housing envelope **10**.

It will be appreciated by those skilled in the art that, in the construction of FIG. **4** as well, analogously to the component of FIG. **1**, an integral envelope comprising hardened casting composition **5** with luminous substance particles **6**, may also be used.

In the exemplary embodiment of FIG. **5**, a layer **4** (see the list of materials given above) is coated directly on the semiconductor body **1**. The semiconductor body **1** and portions of the electrical terminals **2**, **3** are enclosed by a further transparent housing envelope **10**. The latter causes no change in wavelength of the radiation that has passed through the layer **4**, and it is made for instance from a transparent epoxy resin that is usable in LED technology, or from glass.

Such semiconductor bodies **1** provided with a layer **4** and without an envelope can naturally advantageously be used in all the housing constructions known from LED technology (such as SMD housings, and radial housings; see FIG. **4**).

In all the components described above, in order to optimize the color impression of the light emitted and to adapt the emission characteristics, the casting composition **5**, optionally the transparent envelope **15**, and/or optionally the further transparent envelope **10** may have light-scattering particles, advantageously so-called diffusors. Examples of such diffusers are mineral fillers, in particular CaF_2, TiO_2, SiO_2, $CaCO_3$, or $BaSO_4$, or organic pigments. These materials can easily be added to epoxy resins.

FIGS. **6–8** illustrate emissions spectra. FIG. **6** refers to a semiconductor body that emits blue light (luminescence maximum at λ~430 nm) and FIGS. **7** and **8** refer to semiconductor components that emit white light. In each case, the wavelength λ is plotted in nm on the abscissa, and a relative electroluminescence (EL) intensity is plotted on the ordinate.

Of the radiation emitted by the semiconductor body in FIG. **6**, only some is converted into a longer-wavelength range, so that white light is created as the mixed color. The dashed line **30** in FIG. **7** represents an emissions spectrum of a semiconductor component which emits radiation comprising two complementary wavelength ranges (blue and yellow) and thus emits combined white light. The emissions spectrum here has one maximum each at wavelengths between approximately 400 and approximately 430 nm (blue) and between approximately 550 and 580 nm (yellow). The solid line **31** represents the emissions spectrum of a semiconductor component that mixes the color white from three wavelength ranges (additive color triad comprising blue, green and red). The emissions spectrum here has one maximum each for the wavelengths of approximately 430 nm (blue), approximately 500 nm (green) and approximately 615 nm (red).

FIG. **8** shows an emissions spectrum of a white-emitting semiconductor component, which is provided with a semiconductor body that transmits an emissions spectrum as shown in FIG. **6** and in which YAG:Ce is used as the luminous substance. Of the radiation shown in FIG. **6** emitted by the semiconductor body, only some is converted into a longer-wavelength range, so that white light is created as a mixed color. The variously dashed lines **32–33** of FIG. **8** represent emissions spectra of semiconductor components according to the invention, in which the epoxy resin of the casting composition **5** has different YAG:Ce concentrations. Each emissions spectrum has one maximum intensity between lambda=420 nm and lambda=430 nm (i.e., in the blue spectrum), and between lambda=520 nm and lambda=545 nm (i.e., in the green spectrum). The emission bands having the longer-wavelength maximum intensity are predominantly located in the yellow spectral range. The graph of FIG. **8** shows that in the semiconductor component of the invention, the CIE color location of the white light can be varied in a simple way by varying the luminous substance concentration in the epoxy resin.

While the foregoing specification refers specifically to a semiconductor body, for example LED chips or laser diode chips, the invention is not in the least restricted to these embodiments. The term may also be understood to mean a polymer LED, for instance, that emits an equivalent radiation spectrum.

We claim:

1. A method of producing a wavelength-converting casting composition, for converting a wavelength of ultraviolet, blue or green light emitted by an electroluminescent component, the method comprising:

providing a base of transparent epoxy casting resin;

providing a luminous substance pigment powder containing luminous substance pigments having grain sizes $\leqq 20$ μm and a mean grain diameter $d_{50} \leqq 5$ μm and being selected from the group consisting of Ce-doped phosphors; garnets doped with rare earths; thiogallates doped with rare earths; aluminates doped with rare earths; and orthosilicates doped with rare earths;

tempering the luminous substance pigment powder at a temperature of $\geqq 200°$ C. and subsequently mixing the tempered pigment powder with the epoxy casting resin.

2. The method according to claim **1**, wherein the step of providing a luminous substance pigment powder comprises providing an inorganic luminous substance pigment powder comprising luminous substance pigments of agents doped with rare earths and having grain sizes $\leqq 20$ μm and a mean grain diameter $d_{50} \leqq 5$ μm.

3. The method according to claim **1**, which comprises, prior to the mixing step, slurrying the luminous substance pigment powder in a higher-boiling alcohol and subsequently drying the luminous substance pigment powder.

4. The method according to claim **1**, which comprises, prior to the mixing step, adding a hydrophobic silicone wax to the luminous substance pigment powder.

5. The method according to claim **1**, which comprises surface-modifying the luminous substance pigment powder at elevated temperatures with alcohols, glycol ethers and silicones.

6. A method of producing a wavelength-converting casting composition, the method comprising:

providing a base of transparent epoxy casting resin;

providing a luminous substance pigment powder containing luminous substance pigments having grain sizes $\leqq 20$ μm and a mean grain diameter $d_{50} \leqq 5$ μm and being selected from the group consisting of Ce-doped phosphors; garnets doped with rare earths; thiogallates doped with rare earths; aluminates doped with rare earths; and orthosilicates doped with rare earths; and

mixing the pigment powder with the epoxy casting resin.

7. The method according to claim **6**, which comprises, prior to the mixing step, tempering the luminous substance pigment powder at a temperature of $\geqq 200°$ C.

8. The method according to claim **6**, which comprises, prior to the mixing step, slurrying the luminous substance pigment powder in a high-boiling point alcohol and subsequently drying the luminous substance pigment powder.

9. The method according to claim 7, which comprises, prior to the mixing step, adding a hydrophobic silicone wax to the luminous substance pigment powder.

10. The method according to claim 7, which comprises surface-modifying the luminous substance pigment powder at elevated temperatures with alcohols, glycol ethers and silicones.

11. A method of producing a wavelength-converting casting composition for a white light emitting semiconductor component having an electroluminescing semiconductor body emitting blue light, the method comprising:

providing a base of transparent epoxy casting resin;

providing a luminous substance pigment powder of luminous substance pigments having grain sized $\leqq 20$ μm and a mean grain diameter $d_{50} \leqq 5$ μm, the pigment powder comprising luminous substance pigments from Ce-doped phosphors which shift some of the blue light emitted by the semiconductor body into the yellow spectral range; and

mixing the pigment powder with epoxy casting resin.

12. The method according to claim 11, wherein the pigment powder comprises luminous pigments from a phosphorous group having the general formula $A_3B_5O_{12}$:M, where A is at least one element selected from the group consisting of Y, Gd and Lu; B is at least one element selected from the group consisting of Al and Ga; and M is at least one element selected from the group consisting of Ce, Eu and Cr.

13. The method according to claim 12, wherein the mean grain diameter d_{50} of the luminous substance pigments is between one and two micrometers.

14. The method according to claim 12, which comprises adding light-scattering particles to the casting composition.

15. The method according to claim 11, which comprises, prior to the mixing step, tempering the luminous substance pigment powder at a temperature of $\geqq 200°$ C.

16. A method of producing a wavelength-converting casting composition for a white light emitting semiconductor component having an electroluminescing semiconductor body emitting blue light, the method comprising:

providing a base of transparent epoxy casting resin;

providing a luminous substance pigment powder of luminous substance pigments having grain sizes $\leqq 20$ μm and a mean grain diameter $d_{50} \leqq 5$ μm;

the pigment powder comprising luminous substance pigments selected from the group consisting of garnets doped with rare earths; thiogallates doped with rare earths; alluminates doped with rare earths; and orthosilicates doped with rare earths; which pigments shift some of the blue light emitted by the semiconductor body into the green and red spectral range; and

mixing the tempered pigment powder with the epoxy casting resin.

17. The method according to claim 16, wherein the main grain diameter d_{50} of the luminous substance pigments is between one and two micrometers.

18. The method according to claim 16, which comprises adding light-scattering particles to the casting composition.

19. The method according to claim 16, which comprises, prior to the mixing step, tempering the luminous substance pigment powder at a temperature of $\geqq 200°$ C.

* * * * *

C

US006592780B2

(12) **United States Patent**
Höhn et al.

(10) **Patent No.: US 6,592,780 B2**
(45) **Date of Patent: *Jul. 15, 2003**

(54) **WAVELENGTH-CONVERTING CASTING COMPOSITION AND WHITE LIGHT-EMITTING SEMICONDUCTOR COMPONENT**

(75) Inventors: **Klaus Höhn**, Taufkirchen (DE); **Alexandra Debray**, Regensburg (DE); **Peter Schlotter**, Freiburg (DE); **Ralf Schmidt**, Vörstetten (DE); **Jürgen Schneider**, Kirchzarten (DE)

(73) Assignee: **Osram Opto Semiconductors GmbH**, Regensburg (DE)

(*) Notice: Subject to any disclaimer, the term of this patent is extended or adjusted under 35 U.S.C. 154(b) by 0 days.

This patent is subject to a terminal disclaimer.

(21) Appl. No.: **09/843,080**

(22) Filed: **Apr. 25, 2001**

(65) **Prior Publication Data**

US 2001/0028053 A1 Oct. 11, 2001

Related U.S. Application Data

(63) Continuation of application No. 09/650,932, filed on Aug. 29, 2000, now Pat. No. 6,245,259, which is a division of application No. 09/536,564, filed on Mar. 28, 2000, now Pat. No. 6,277,301, which is a division of application No. 09/082,205, filed on May 20, 1998, now Pat. No. 6,066,861, which is a continuation of application No. PCT/DE97/02139, filed on Sep. 22, 1997.

(30) **Foreign Application Priority Data**

Sep. 20, 1996 (DE) 196 38 667

(51) **Int. Cl.**[7] **C09K 11/02**

(52) **U.S. Cl.** **252/301.36**; 257/98; 257/99; 257/100; 313/486; 313/467; 313/468

(58) **Field of Search** ..... 252/301.36, 301.4 R; 257/98, 99, 100; 313/486, 467, 468

(56) **References Cited**

U.S. PATENT DOCUMENTS

3,453,604 A 7/1969 Geusic et al.
3,510,732 A 5/1970 Amans

(List continued on next page.)

FOREIGN PATENT DOCUMENTS

DE 3804293 A1 3/1978
DE 9013615.2 1/1991

(List continued on next page.)

OTHER PUBLICATIONS

Translation of Japanese Patent No. 2927279.
Applied Physics Letters, "Candela–class high–brightness InGaN/AlGaN double–heterostructure blue–light–emitting diodes", Mar. 28, 1994, 64 (13), pp. 1687–1689.
J. Applied Physics, "Large–band gap SiC, III–V nitride, and II–VI Zn–Se–based semiconductor device technologies", Aug. 1, 1994, 76 (3), pp. 1363–1398.
J. Vac. Sci. Technol., InGaN/AlGaN blue–light emitting diode, May/Jun. 1995, A13 (3), pp. 705–710.
Journal of IES (Illuminating Engineering Soc.), "Improved color rendition in high pressure mercury vapor lamps", Jan. 1977, pp. 89–91.
Physical Review, "Frequency Upconversion in YF_3: Yb^{3+}, $Tm3^{+}$", Apr. 15, 1971, B3 (8), pp. 2698–2705.

(List continued on next page.)

Primary Examiner—C. Melissa Koslow
(74) *Attorney, Agent, or Firm*—Fish & Richardson P.C.

(57) **ABSTRACT**

The wavelength-converting casting composition is based on a transparent epoxy casting resin with a luminous substance admixed. The composition is used in an electroluminescent component having a body that emits ultraviolet, blue or green light. An inorganic luminous substance pigment powder with luminous substance pigments is dispersed in the transparent epoxy casting resin. The luminous substance is a powder of Ce-doped phosphors and the luminous substance pigments have particle sizes $\leqq 20$ μm and a mean grain diameter $d_{50} \leqq 5$ μm.

10 Claims, 4 Drawing Sheets

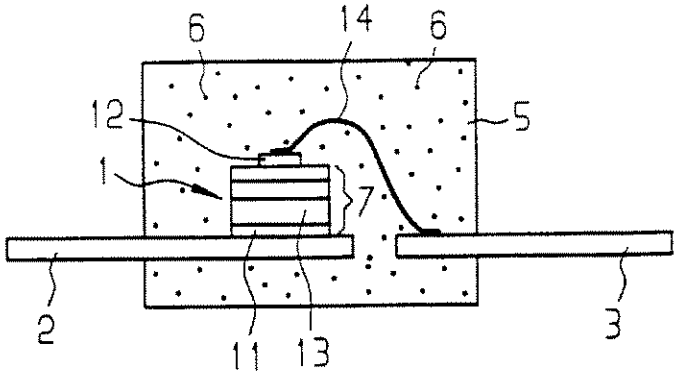

U.S. PATENT DOCUMENTS

3,529,200	A		9/1970	Potter	
3,573,568	A		4/1971	Siegel	
3,593,055	A		7/1971	Geusic	
3,654,463	A		4/1972	Geusic et al.	
3,691,482	A		9/1972	Pinnow et al.	
3,699,478	A		10/1972	Pinnow et al.	
3,819,974	A		6/1974	Stevenson et al.	
3,932,881	A		1/1976	Mita	
3,942,185	A		3/1976	Lebailly	
4,146,790	A		3/1979	Goetzberger et al.	
4,173,495	A		11/1979	Rapp et al.	
4,262,206	A		4/1981	Viehmann	
4,298,820	A		11/1981	Bongers et al.	
4,431,941	A		2/1984	Roy et al.	
4,495,514	A		1/1985	Lawrence et al.	
4,550,256	A		10/1985	Berkstresser et al.	
4,599,537	A		7/1986	Yamashita	
4,716,337	A		12/1987	Huiskes et al.	
4,727,283	A		2/1988	Van Kemenade et al.	
4,734,619	A		3/1988	Havel	
4,818,983	A		4/1989	Hara et al.	
5,019,746	A		5/1991	Merg	
5,035,513	A		7/1991	Fehrenbach et al.	
5,120,214	A		6/1992	Tokarlin	
5,184,114	A		2/1993	Brown	
5,369,289	A		11/1994	Tamaki et al.	
5,471,113	A		11/1995	DeBacker et al.	
5,535,230	A		7/1996	Abe	
5,602,418	A		2/1997	Imai et al.	
5,652,438	A		7/1997	Sassa et al.	
5,656,832	A		8/1997	Ohba et al.	
5,670,798	A		9/1997	Schetzina	
5,744,233	A		4/1998	Opitz et al.	428/328
5,959,316	A		9/1999	Lowery	
5,998,925	A	*	12/1999	Shimizu et al.	313/503
6,066,861	A	*	5/2000	Hohn et al.	252/301.36
6,078,063	A		6/2000	Nakamura et al.	
6,245,259	B1	*	6/2001	Hohn et al.	252/301.36
6,277,301	B1	*	8/2001	Hohn et al.	252/301.36

FOREIGN PATENT DOCUMENTS

EP	0486052	A1	5/1992
GB	1332462		10/1973
GB	2053953		2/1981
GB	1589964		5/1981
JP	46-7462		12/1971
JP	47-17684		9/1972
JP	49-1221		1/1974
JP	49-24355		3/1974
JP	49-112577		10/1974
JP	50-43913		4/1975
JP	52-45181		10/1977
JP	54-41660		12/1979
JP	59-50455		4/1984
JP	2-91980		9/1988
JP	63-280467		11/1988
JP	64-071053		3/1989
JP	2-138361		5/1990
JP	4-63162		5/1992
JP	4-63163		5/1992
JP	5-152609		6/1993
JP	5-63068		8/1993
JP	6-69546		3/1994
JP	7-99345		4/1995
JP	7-176794		7/1995
JP	8-7614		1/1996
JP	9-73807		3/1997
JP	8-92549		4/1998
JP	11-220174		8/1999
WO	WO 98/12757	*	3/1998

OTHER PUBLICATIONS

J. Applied Physics, "Efficiency of Red, Green, and Blue Infrared–to–Visible Conversion Sources", Apr. 1971, pp. 1958–1960.

English abstract of Japanese Laid–open Patent 10–179471, Jul. 17, 1989.

Translation of Japanese Laid–open Patent 05–152609, Jun. 18, 1993.

Translation of Japanese Laid–open Patent 07–176794, Jul. 14, 1995.

Translation of Japanese Laid–open Patent 08–7614, Jan. 12, 1996.

Osinski, Marek, AlGaN/InGaN/GaN blue light emitting diode degradation under pulsed current stress, Applied Physics Letter, Aug. 12, 1996, pp. 898–900.

D.J. Robbins: "The Effects of Crystal Field and Temperature on the Photoluminescence Excitation of Ce^{3+}in YAG", J. Electrchem. Soc.: Solid State Science and Technology 1979, vol. 126, No. 9, pp. 1550–1555.

Glen A. Slack et al.: "Optical Absorption of $Y_3A_{15}O_{12}$ from 10– to 55000–cm Wave Numbers", Physical Review, vol. 177, No. 3, Jan. 15, 1969, pp. 1308–1314.

Shuji Nakamura et al.: "The blue laser diode: GaN based Light emitters and lasers", Springer Vertag, Berlin, 1997, pp. 216–219, 328.

G.. Blasse et al.,: "A New Phosphor for Flying–Spot Cathode–Ray Tubes for Color Television: Yellow Emitting $Y^3Al_5O^{12}$–Ce_{3+}", Applied Physics Letter, vol. 11, No. 2, 15, pp. 53, 54.

B.M.J. Smets: "Phosphors Based On Rare–Earths, A New Era in Fluorescent Lighting", Materials Chemistry and Physics, 16 (1987), pp. 283–299.

Cheo et al.: "White Light Emitting glasses", Journal Solid State Chemistry, 1991, pp. 17–29.

Siemens Forsch.—Entwichkl.—Ber.Bd (1997), No. 3, p. 162 [Siemens Research and Development Reports], vol. 6.

S.N. Mohammad et al.: "emerging gallium Nitride Based Devices", Proceeding of the IEEE: vol. 83, No. 10, Oct. 1995, pp. 1306–1355.

Translation of Japanese Laid–open Patent 50–43913, Apr. 21, 1975.

Phosphor and Emitter, 1997.

Product Information—Philips Lighting, Fluorescent Powder, 1990.

Translation of the newspaper "Nikkei Sangyo Shimbun", issued on Sep. 13, 1996, *White–LED Lamp Efficient Light Emission Half a Production Cost*, Nichia Chemical.

"Phosphor Handbook", Ohm 1987, S. 166–175, 268–276.

Translation of Proceedings of 264th Institute of Phosphor Society, "Development and Application of High Bright White LED Lamps", Nov. 29, 1996, pp. 5–14.

Translation of Japan 52–40959 (previously submitted).

English translation of Nikkei electronics, Sep. 23, 1996, No. 671, "Nichia Chemical starts the sample shipment of white Light Emitting Diode".

English Abstract of Japanese 01175103 A, Jul. 11, 1989.

English Abstract of Japanese 01260707 A, Oct. 18, 1989.

Phosphor Handbook, English Translation of (BAT).

English Translation of Japanese Patent Application No. 245381, Filed Sep. 18, 1996, Nichia Chemical Industries Ltd.

English Translation of Japanese Patent Application No. 359004, Filed Dec. 27, 1996, Nichia Chemical Industries Ltd.

English Translation of Japanese Patent Application No. 198585, Filed Jul. 29, 1996, Nichia Chemical Industries Ltd.

English Translation of Japanese Patent Application No. 018010, Filed Mar. 31, 1997, Nichia Chemical Industries Ltd.

* cited by examiner

FIG 1

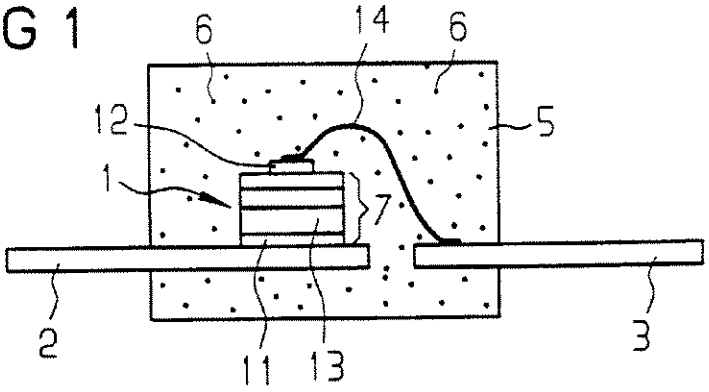

FIG 2

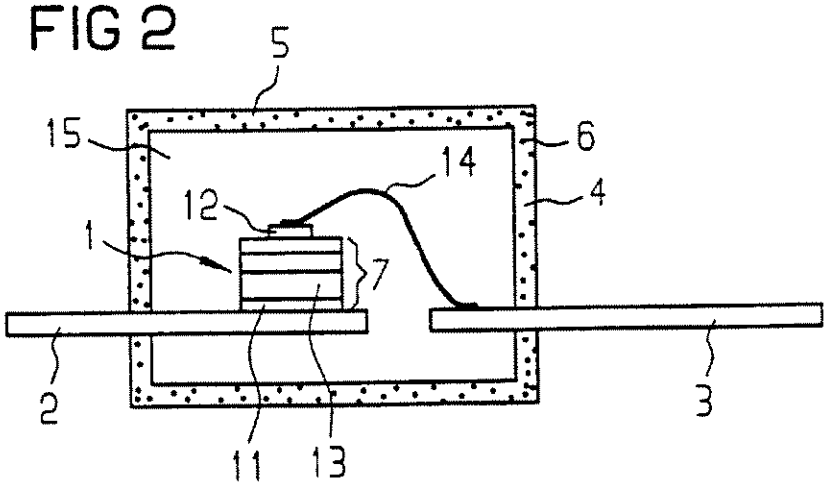

FIG 3

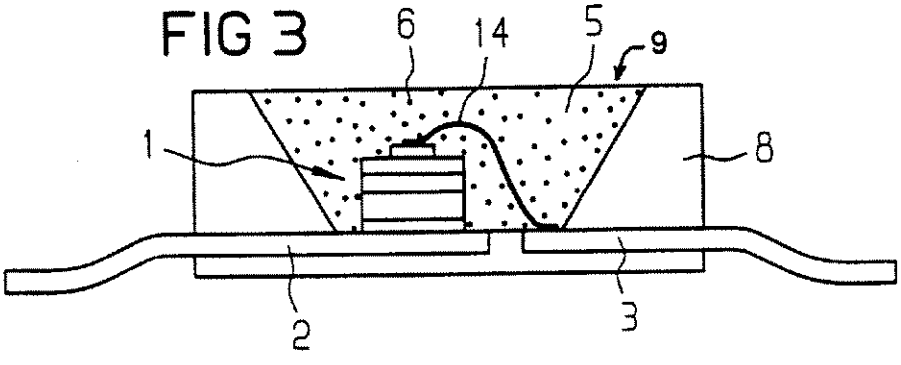

FIG 4

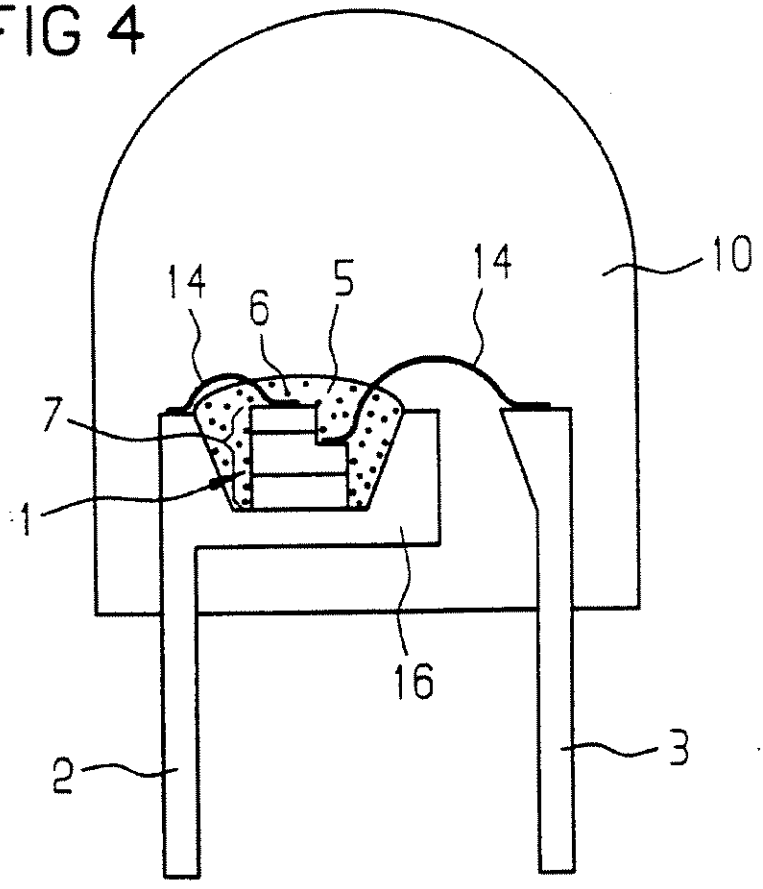

FIG 5

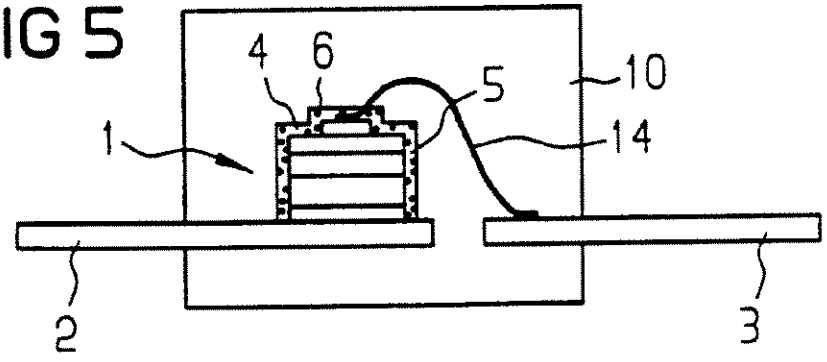

FIG 6

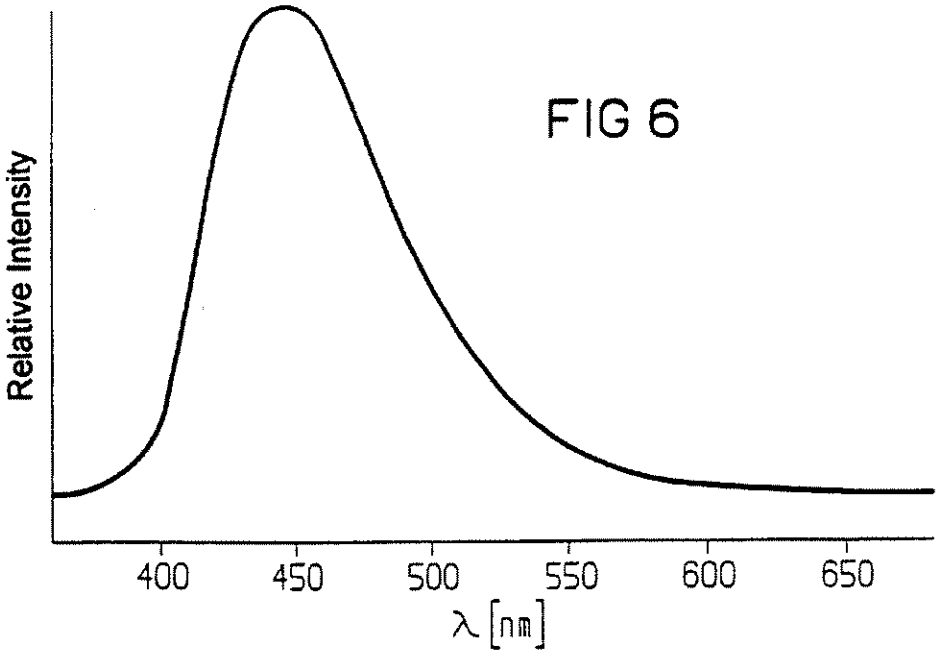
Relative Intensity
400
450
500
550
600
650
λ [nm]

FIG 7

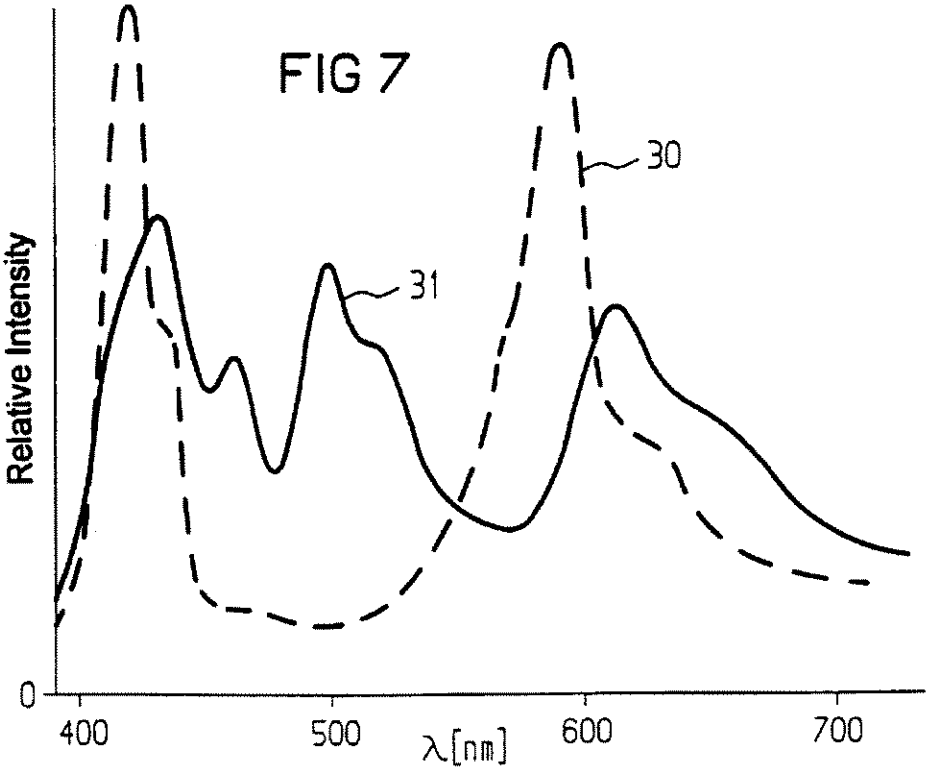
30
31
Relative Intensity
0
400
500
600
700
λ[nm]

FIG 8

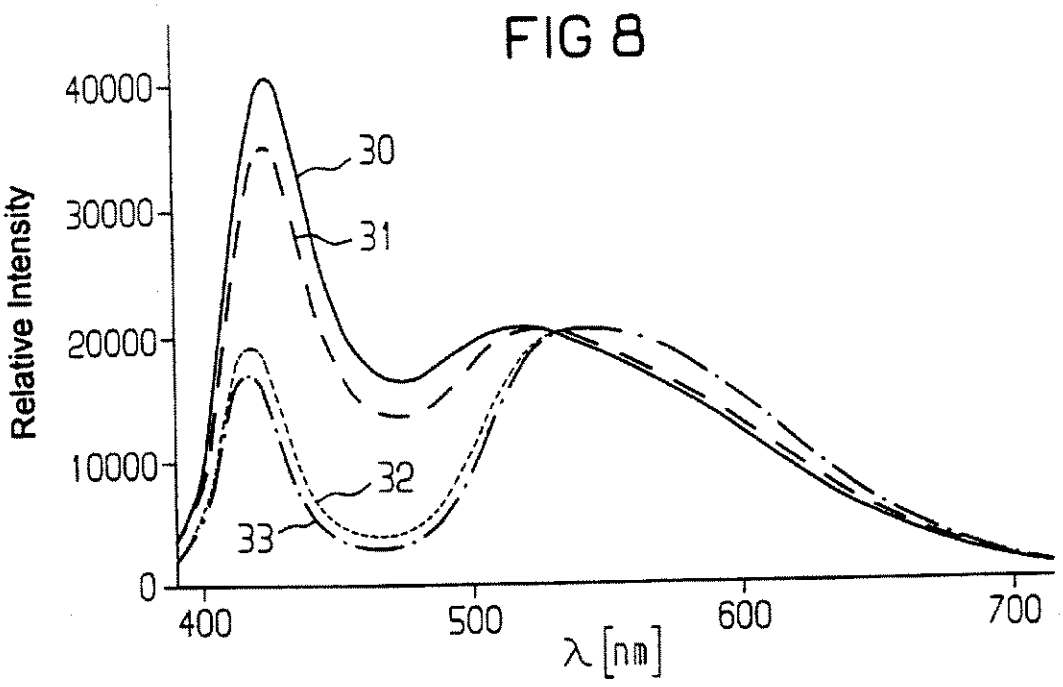
Relative Intensity
40000
30000
20000
10000
0
400
500
600
700
λ [nm]
30
31
32
33

WAVELENGTH-CONVERTING CASTING COMPOSITION AND WHITE LIGHT-EMITTING SEMICONDUCTOR COMPONENT

CROSS-REFERENCE TO RELATED APPLICATION

This is a continuation of No. 09/650,932, filed Aug. 29, 2000, now U.S. Pat. No. 6,245,259, which is a division of application No. 09/536,564, filed Mar. 28, 2000, now U.S. Pat. No. 6,277,301, which is a division of application No. 09/082,205, filed May 20, 1998, now U.S. Pat. No. 6,066,861, which was a continuation of international application PCT/DE97/02139, filed Sep. 22, 1997, which designated the United States.

BACKGROUND OF THE INVENTION

1. Field of the Invention

The invention relates to a wavelength-converting casting composition based on a transparent epoxy casting resin which is mixed with a luminous substance, for an electroluminescent component having a body that emits ultraviolet, blue or green light.

2. Description of the Related Art

A component of that type has become known, for instance, from German published, non-prosecuted patent application DE 38 04 293. The reference describes an arrangement with an electroluminescent diode or laser diode, in which the emissions spectrum emitted by the diode is shifted toward longer wavelengths, by means of a plastic element mixed with a fluorescing, light-converting, organic colorant. The light emitted by the arrangement as a result has a different color from what the light emitting diode emitted. Depending on the type of colorant added to the plastic, it is possible to produce LED arrays that light up in different colors with one and the same type of light-emitting diode (LED).

In many potential applications for LEDs, such as in display elements in motor vehicle dashboards, illumination in aircraft and automobiles, and in LED displays capable of showing full color, there is an increasing demand for LED arrays with which mixed color light and in particular white light can be generated.

However, the prior art casting compositions of the type referred to at the outset with organic luminous substances exhibit a shift in the color location, that is, the color of the light emitted by the electroluminescent component, under temperature and temperature/humidity stresses.

Japanese patent disclosure JP-07 176 794- A describes a white-light-emitting planar light source, in which two diodes that emit blue light are disposed on one face end of a transparent plate and emit light into the transparent plate. The transparent plate is coated on one of the two opposed main sides with a fluorescing substance that emits light when it is excited with the blue light of the diodes. The light emitted by the fluorescing substance has a different wavelength from the blue light emitted by the diodes. In this known component, it is especially difficult to apply the fluorescing substance in such a way that the light source emits homogeneous white light. Moreover, replicability and mass production presents major problems, because even slight fluctuations in the layer thickness of the fluorescing layer, for instance from irregularities of the surface of the transparent plate, cause a change in the white of the light emitted.

SUMMARY OF THE INVENTION

It is accordingly an object of the invention to provide a wavelength-converting casting mass, which overcomes the above-mentioned disadvantages of the prior art devices and methods of this general type and with which electroluminescent components can be produced that emit homogeneous mixed-colored light, and which enables mass production at reasonable engineering effort and expense and with maximally replicable component characteristics, The emitted light should be colorstable even under temperature and temperature/humidity stresses. It is a further object to specify a use for the casting mass and a method for producing the composition.

With the foregoing and other objects in view there is provided, in accordance with the invention, a wavelength-converting casting composition, for converting a wavelength of ultraviolet, blue or green light emitted by an electroluminescent component, comprising:

a transparent epoxy casting resin;

an inorganic luminous substance pigment powder dispersed in the transparent epoxy resin, the pigment powder comprising luminous substance pigments from a phosphorus group having the general formula $A_3B_5X_{12}$:M;

the luminous substance pigments having grain sizes $\leqq 20$ μm and a mean grain diameter $d_{50} \leqq 5$ μm.

In accordance with an added feature of the invention, the mean grain diameter d_{50} of the luminous substance pigments is between one and two micrometers.

Inorganic/mineral luminous substances are extremely stable with regard to temperature and temperature/humidity stresses.

In accordance with an additional feature of the invention, the composition includes the following parts:

a) epoxy casting resin $\geqq 60\%$ by weight;

b) luminous substance pigments >0 and $\leqq 25\%$ by weight;

c) thixotropic agent >0 and $\leqq 10\%$ by weight;

d) mineral diffusor >0 and $\leqq 10\%$ by weight;

e) processing adjuvant >0 and $\leqq 3\%$ by weight;

f) hydrophobic agent >0 and $\leqq 3\%$ by weight; and

g) adhesion promoters >0 and $\leqq 2\%$ by weight.

Suitable epoxy casting resins are described for instance in German published, non-prosecuted patent application 26 42 465 (pp. 4–9, in particular examples 1–4), and in European patent disclosure EP 0 039 017 and U.S. Pat. No. 4,365,052 (pp. 2–5, in particular examples 1–8 appearing in both the EP and U.S. patents). The disclosures of those documents are hereby expressly incorporated by reference.

Pyrogenic silicic acid is for instance used as the thixotropic agent. The thixotropic agent is used to thicken the epoxy casting resin, so as to reduce the sedimentation of the luminous substance pigment powder. The flow and wetting properties are also adjusted for processing the casting resin

CaF_2 is preferably used as a mineral diffusor for optimizing the luminous pattern of the component.

Glycol ether is for instance suitable as a processing adjuvant. It improves the compatibility between the epoxy casting resin and the luminous substance pigment powder and is thus used to stabilize the dispersion of luminous substance pigment powder and epoxy casting resin. To that end, surface modifiers based on silicone can also be employed.

The hydrophobic agent, such as liquid silicone wax, is also used to modify the pigment surface; in particular, the compatibility and wettability of the inorganic pigment surface is improved with the organic resin.

The adhesion promoter, such as functional alkoxysiloxane, improves the adhesion between the pigments and the epoxy resin in the cured state of the casting composition. As a result it is attained that the boundary face between the epoxy resin and the pigments will not rupture, for instance in response to temperature fluctuations. Gaps between the epoxy resin and the pigments would cause light losses in the component.

The epoxy casting resin, preferably with a reactive triple oxiran ring, preferably includes a monofunctional and/or multifunctional epoxy casting resin system (≧80% by weight, such as bisphenol-A-diglycidyl ether), a reactive diluent (≦10% by weight, such as aromatic monoglycidyl ether), a multifunctional alcohol (≦5% by weight), a degassing agent based on silicone (≦1% by weight), and a decolorizing component to adjust the color number (≦1% by weight).

In accordance with another feature of the invention, the luminous substance pigments are substantially spherical particles or flakelike particles. The tendency to clumping of such pigments is advantageously very slight. The H_2O content is below 2%.

In the production and processing of epoxy casting resin components with inorganic luminous substance pigment powders, in general not only wetting but also sedimentation problems occur. Especially luminous substance pigment powders with d_{50}≦5 μm have a strong tendency to clumping. In the last-named composition of the casting composition, the luminous substance pigments, with the above-indicated particle size, can advantageously be substantially free of clumps and can be dispersed homogeneously in the epoxy casting resin. This dispersion is stable even under long-term storage of the casting composition. Essentially no problems of wetting and/or sedimentation occur.

In accordance with a further feature of the invention, the luminous substance pigments are particles of Ce-doped garnets, such as, particularly, YAG:Ce particles. An advantageous dopant concentration is 1%, for example, and an advantageous luminous substance concentration is 12%, for example. The preferred high-purity luminous substance pigment powder also advantageously has an iron content of ≦5 ppm. A high iron content leads to high light losses in the component. The luminous substance pigment powder is highly abrasive. The iron content in the casting composition can therefore rise considerably during production. Iron contents in the casting composition <20 ppm are advantageous.

The inorganic luminous substance YAG:Ce has the particular advantage, among others, that this involves insoluble color pigments with an index of refraction of approximately 1.84. As a result, along with the wavelength conversion, dispersion and scattering effects occur that lead to good mixing of blue diode emissions with yellow converter radiation.

It is also especially advantageous that the luminous substance concentration in the epoxy resin when inorganic luminous substance pigments are used is not limited by the solubility, as is the case for organic colorants.

For further reduction of clumping, the luminous substance pigments may advantageously be provided with a silicone coating.

With the above and other objects in view there is also provided, in accordance with the invention, a method of producing a wavelength-converting casting composition, for converting a wavelength of ultraviolet, blue or green light emitted by an electroluminescent component, the method which comprises:

providing a base of transparent epoxy casting resin;

providing a luminous substance pigment powder of luminous substance pigments from a phosphorus group having the general formula $A_2B_5X_{12}$:M;

tempering the luminous substance pigment powder at a temperature of ≧200° C. and subsequently mixing the tempered pigment powder with the epoxy casting resin.

Tempering is preferably effected for approximately ten hours. As a result, again the tendency to clumping can be reduced.

As an alternative or in addition for this purpose, the luminous substance pigment powder, before being mixed with the epoxy casting resin, can be slurried in a high-boiling point alcohol and subsequently dried. A further possibility for reducing clumping is to add a hydrophobic silicone wax to the luminous substance pigment powder before the powder is mixed with the epoxy casting resin. Surface stabilization of the phosphors by heating the pigments in the presence of glycol ethers, for instance for 16 hours at T >60° C., is especially advantageous.

To avoid problematic contamination upon dispersal of the luminous substance pigments, caused by abrasion, reaction vessels, agitators and dispersing devices as well as rolling mechanisms of glass, corundum, carbide and nitride materials as well as especially hardened types of steel are used. Clump-free luminous substance dispersions are also obtained by ultrasonic methods or by the use of screens and glass ceramic frits.

An especially preferred inorganic luminous substance for producing optoelectronic components that light up white is the phosphorous YAG:Ce ($Y_3Al_5O_{12}:Ce^{3+}$). This phosphorous can be especially simply mixed with transparent epoxy casting resins conventionally used in LED technology. Also conceivable as luminous substances are other garnets, doped with rare earths, such as $Y_3Ga_5O_{12}:Ce^{3+}$, $Y(Al,Ga)_5O_{12}:Ce^{3+}$, and $Y(Al, Ga)_5O_{12}:Tb^{3+}$.

To generate mixed-colored light, the thiogallates doped with rare earths are moreover especially suitable, examples being $CaGa_2S_4:Ce^{3+}$ and $SrGa_2S_5:Ce^{3+}$. Once again, the use of aluminates doped with rare earths, such as $YAlO_3:Ce^{3+}$, $YGaO_3:Ce^{3+}$, $Y(Al,Ga)O_3:Ce^{3+}$, and orthosilicates doped with rare earths, $M_2SiO_5:Ce^{3+}$ (M:Sc,Y,Sc) , such as $Y_2SiO_5:Ce^{3+}$ is conceivable. In all the yttrium compounds, the yttrium can in principle also be replaced with scandium or lanthanum.

Therefore, in the phosphorus group A3B5X12:M, the variables may stand for the following exemplary elements: A=Y, Ca, Sr; B=Al, Ga, Si; X=O, S; and M=Ce^{3+}, Tb^{3+}. The variables can represent a single one of the listed exemplary elements. Alternatively, the variables can represent a mixture of two or more of the listed exemplary elements.

Preferably, the casting composition according to the invention is used in a radiation-emitting semiconductor body, in particular with an active semiconductor layer or semiconductor layer sequence of $Ga_xIn_{1-x}N$ or $Ga_xAl_{1-x}N$, which in operation emits an electromagnetic radiation of the ultraviolet, blue and/or green spectral range. The luminous substance particles in the casting composition convert some of the radiation originating in this spectral range into radiation with a longer wavelength, in such a way that the semiconductor component emits mixed radiation, and in particular mixed-colored light comprising this radiation as well as radiation from the ultraviolet, blue and/or green spectral range. This means for instance that the luminous substance particles spectrally selectively absorb some of the radiation emitted by the semiconductor body and emit in the longer-wave range. Preferably, the radiation emitted by the

semiconductor body has a relative maximum intensity at a wavelength lambda $\lambda \leqq 520$ nm, and the wavelength range spectrally selectively absorbed by the luminous substance particles is outside this maximum intensity.

It is also advantageously possible for a plurality of different kinds of luminous substance particles, which emit at different wavelengths, to be dispersed in the casting composition. This is preferably achieved by means of different doping in different host lattices. This advantageously makes it possible to generate manifold color mixtures and color temperatures of the light emitted by the component. This is especially of interest for LEDs capable of emitting full color.

In a preferred use of the casting composition of the invention, a radiation-emitting semiconductor body (such as an LED chip) is at least partly enclosed by the casting is composition. The casting composition is preferably simultaneously used as a component envelope (housing) . The advantage of a semiconductor component in accordance with this embodiment is essentially that conventional production lines used to make conventional LEDs (such as radial LEDs) can be used to produce it. For the component envelope, instead of the transparent plastic used for this purpose in conventional LEDs, the casting composition can simply be employed.

With the casting composition of the invention, it is possible in a simple way, with a single colored light source, particularly an LED with a single semiconductor body that emits blue light, to create mixed-colored and in particular white light. For instance to generate white light with a semiconductor body that emits blue light, some of the radiation emitted by the semiconductor body is converted out of the blue spectral range into the yellow spectral range, which is complementary in color to blue, by means of inorganic luminous substance particles.

The color temperature or color location of the white light can be varied by a suitable choice of the luminous substance, its particle size, and its concentration. In addition, luminous substance mixtures can also be employed, and as a result advantageously the desired tonality of the color of the emitted light can be adjusted very precisely.

Especially preferably, the casting composition is used in a radiation-emitting semiconductor body in which the emitted radiation spectrum has a maximum intensity at a wavelength between 420 nm and 460 nm, and in particular at 430 nm (examples being semiconductor bodies based on $Ga_xAl_{1-x}N$) or 450 nm (such as semiconductor bodies based on $Ga_xIn_{1-x}N$). With such a semiconductor component, nearly all the colors and mixed colors in the CIE chromaticity diagram can advantageously be generated.

Instead of the radiation-emitting semiconductor body of electroluminescing semiconductor material, however, some other electroluminescing material may be used, such as polymer material.

With the objects of the invention is view there is further provided, in accordance with the invention, a light-emitting semiconductor component, comprising:

- a semiconductor body formed of a semiconductor layer sequence and being capable, during an operation of the semiconductor component, of emitting electromagnetic radiation in at least one of an ultraviolet, blue, and green spectral range;
- a wavelength-converting casting composition disposed in a vicinity of the semiconductor body, the casting composition being formed of a transparent epoxy casting resin and an inorganic luminous substance pigment powder dispersed in the transparent epoxy resin, the pigment powder comprising luminous substance-pigments from a phosphorus group having the general formula $A_3B_5X_{12}$:M and having grain sizes $\leqq 20$ μm and a mean grain diameter $d_{50} \leqq 5$ μm;
- the luminous substance pigments converting a portion of the radiation originating from the ultraviolet, blue and green spectral range into radiation of a higher wavelength, such that the semiconductor component emits mixed radiation including the higher-wavelength radiation and radiation from at least one of the ultraviolet, blue and green spectral range.

In other words, the casting composition is especially suitable for a light-emitting semiconductor component (for instance an LED), in which the electroluminescing semiconductor body is disposed in a recess of a prefabricated housing, optionally already provided with a leadframe, and the recess is provided with the casting composition. This kind of semiconductor component can be produced in great numbers on conventional production lines. All that is needed, after mounting of the semiconductor body in the housing, is to fill the recess with the casting composition.

A semiconductor component that emits white light can be produced with the casting composition according to the invention advantageously by choosing the luminous substance in such a way that a blue radiation emitted by the semiconductor body is converted into complementary wavelength ranges, in particular blue and yellow, or additive color triads, such as blue, green and red. The yellow or green and red light is generated via the luminous substances. The color tonality (color location in the CIE chromaticity diagram) of the white light thus produced can then be varied by means of a suitable choice of the luminous substance or luminous substances in terms of their mixture and concentration.

To improve the mixing of the radiation emitted by an electroluminescing semiconductor body with the radiation converted by the luminous substance and thus to improve the homogeneity of color of the light emitted by the component, in an advantageous feature of the casting composition according to the invention a blue-luminescing colorant, which attenuates a so-called directional characteristic of the radiation emitted by the semiconductor body. The term "directional characteristic" is understood to mean that the radiation emitted by the semiconductor body has a preferential emission direction.

A semiconductor component according to the invention that emits white light, with an electroluminescing semiconductor body emitting blue light, can be especially preferably achieved by admixing the inorganic luminous substance YAG:Ce ($Y_3Al_5O_{12}:Ce^{3+}$) with the epoxy resin used for the casting composition. Some of the blue radiation emitted by the semiconductor body is shifted by the inorganic luminous substance ($Y_3Al_5O_{12}:Ce^{3+}$) into the yellow spectral range and thus into a wavelength range that is complementary in color to the color blue. The color tonality (color location in the CIE chromaticity diagram) of the white light can then be varied by means of a suitable choice of the colorant concentration.

In addition, light-scattering particles, so-called diffusors, can be added to the casting composition. As a result, the color impression and the emission characteristics of the semiconductor component can advantageously be still further optimized.

With the casting composition of the invention, advantageously an ultraviolet radiation emitted by an electroluminescing semiconductor body along with the visible radiation can advantageously be converted into visible light. This markedly increases the brightness of the light emitted by the semiconductor body.

A particular advantage of semiconductor components according to the invention that emit white light, and in which YAG:Ce is used in particular as the luminescence-converting colorant, is that this luminous substance on excitation with blue light causes a spectral shift of approximately 100 nm between absorption and emission. This leads to a substantial reduction and reabsorption of the light emitted by the luminous substance and thus to a higher light yield. Moreover, YAG:Ce advantageously has high thermal and photochemical (such as UV) stability (substantially higher than organic luminous substances) so that even white-emitting diodes for outdoor use and/or high temperature ranges can be produced.

YAG:Ce has by now proved itself to be the best-suitable luminous substance in terms of reabsorption, light yield, thermal and photochemical stability, and processability. However, the use of other Ce-doped phosphors, in particular Ce-doped types of garnet, is also conceivable.

The wavelength conversion of the primary radiation is determined by the crystal field cleavage of the active transition metal centers in the host lattice. By substituting Gd and/or Lu for Y, or Ga for Al in the $Y_3Al_5O_{12}$ garnet lattice, the emission wavelengths can be shifted in various ways, and this can also be done by the type of doping. By substituting Eu^{3+} and/or Cr^{3+} for Ce^{3+} centers, corresponding shifts can be brought about. Corresponding dopings with Nd^{3+} and Er^{3+} even make it possible, because of the greater ion radii and thus reduced crystal field cleavage, to make components that emit infrared (IR) light.

Other features which are considered as characteristic for the invention are set forth in the appended claims.

Although the invention is illustrated and described herein as embodied in a wavelength-converting casting composition, its use, and method for its production, it is nevertheless not intended to be limited to the details shown, since various modifications and structural changes may be made therein without departing from the spirit of the invention and within the scope and range of equivalents of the claims.

The construction and method of operation of the invention, however, together with additional objects and advantages thereof will be best understood from the following description of specific embodiments when read in connection with the accompanying drawings.

BRIEF DESCRIPTION OF THE DRAWINGS

FIG. **1** is a schematic sectional view of a first semiconductor component with a casting composition according to the invention;

FIG. **2** is a schematic sectional view of a second semiconductor component with a casting composition according to the invention;

FIG. **3** is a schematic sectional view of a third semiconductor component with a casting composition according to the invention;

FIG. **4** is a schematic sectional view of a fourth semiconductor component with a casting composition according to the invention;

FIG. **5** is a schematic sectional view of a fifth semiconductor component with a casting composition according to the invention;

FIG. **6** is a graph of an emission spectrum of a semiconductor body that emits blue light, with a layer sequence on the basis of GaN;

FIG. **7** is a graph of the emissions spectra of two semiconductor components with a casting composition according to the invention, which emit white light; and

FIG. **8** is a graph of the emissions spectra of further semiconductor components that emit white light.

DESCRIPTION OF THE PREFERRED EMBODIMENTS

Reference is now had to the figures of the drawing in which elements that are identical or that function identically are identified by the same reference numerals throughout.

In the light-emitting semiconductor component of FIG. **1**, the semiconductor body **1** is secured by its back-side contact **11** to a first electrical terminal **2** by means of an electrically conductive joining means such as a metal solder or an adhesive. The front-side contact **12** is joined to a second electrical terminal **3** by means of a bond wire **14**.

The free surfaces of the semiconductor body **1** and portions of the electrical terminals **2** and **3** are enclosed directly by a hardened, wavelength-converting casting or potting composition **5**. The casting composition preferably has the following: epoxy casting resin 80 to 90% by weight, luminous substance pigments (YAG: Ce)≦15% by weight, diethylene glycol monomethyl ether ≦2% by weight, Tegopren 6875-45 (a processing adjustment, an additive for keeping the surface of the resin free from bubbles, craters and similar faults) ≦2% by weight, Aerosil 200 (a thixotropic agent) ≦5% by weight.

The exemplary embodiment of a semiconductor component according to the invention shown in FIG. **2** differs from that of FIG. **1** in that the semiconductor body **1** in portions of the electrical terminals **2** and **3** are enclosed not by a wavelength-converting potting mass but by a transparent envelope **15**. The transparent envelope **15** does not cause any change in the wavelength of the radiation emitted by the semiconductor body **1** and for instance comprises an epoxy, silicone or acrylate resin conventionally used in LED technology, or some other suitable radiation-permeable material, such as inorganic glass.

A layer **4** is applied to the transparent envelope **15**. The layer **4** comprises a wavelength-converting casting composition and, as shown in FIG. **2**, covers the entire surface of the envelope **15**. It is equally conceivable for the layer **4** to cover only a portion of the surface. The layer **4** for instance comprises a transparent epoxy resin which is mixed with luminous substance particles **6**. Once again, for a semiconductor component that emits white light, YAG:Ce is preferred as the luminous substance.

FIG. **3** illustrates a particularly advantageous and preferred embodiment of the invention. The first and second electrical terminals **2**, **3** are embedded in an opaque, and optionally prefabricated, basic housing **8** that has a recess **9**. The term "prefabricated" is understood to mean that the basic housing **8** is already finished at the terminals **2**, **3**, for instance by means of injection molding, before the semiconductor body is mounted on the terminal **2**. The basic housing **8**, by way of example, is formed of opaque plastic, and in terms of its form the recess **9** is embodied as a reflector **17** for the radiation emitted by the semiconductor body in operation (the reflection optionally being achieved by means of suitable coating of the inside walls of the recess **9**). Such basic housings **8** are used in particular for LEDs that are surface-mounted on printed circuit boards. They are applied, before mounting of the semiconductor body, to a conductor strip (lead frame) that has the electrical terminals **2**, **3**, the application for instance being done by injection molding.

The recess **9** is filled with a casting composition **5**, whose composition is equivalent to that given above in conjunction with the description of FIG. **1**.

FIG. **4** shows a so-called radial diode. Here, the electroluminescing semiconductor body **1** is secured, for instance by soldering or adhesive bonding, in a part **16**, embodied as a reflector, of the first electrical terminal **2**. Such housing constructions are known in LED technology and therefore require no further description here. The free surfaces of the semiconductor body **1** are covered directly by a casting composition **5** containing luminous substance particles **6**, and the casting composition in turn is surrounded by a further transparent housing envelope **10**.

It will be appreciated by those skilled in the art that, in the construction of FIG. **4** as well, analogously to the component of FIG. **1**, an integral envelope comprising hardened casting composition **5** with luminous substance particles **6**, may also be used.

In the exemplary embodiment of FIG. **5**, a layer **4** (see the list of materials given above) is coated directly on the semiconductor body **1**. The semiconductor body **1** and portions of the electrical terminals **2**, **3** are enclosed by a further transparent housing envelope **10**. The latter causes no change in wavelength of the radiation that has passed through the layer **4**, and it is made for instance from a transparent epoxy resin that is usable in LED technology, or from glass.

Such semiconductor bodies **1** provided with a layer **4** and without an envelope can naturally advantageously be used in all the housing constructions known from LED technology (such as SMD housings, and radial housings; see FIG. **4**).

In all the components described above, in order to optimize the color impression of the light emitted and to adapt the emission characteristics, the casting composition **5**, optionally the transparent envelope **15**, and/or optionally the further transparent envelope **10** may have light-scattering particles, advantageously so-called diffusers. Examples of such diffusers are-mineral fillers, in particular CaF_2, TiO_2, SiO_2, $CaCO_3$, or $BaSO_4$, or organic pigments. These materials can easily be added to epoxy resins.

FIGS. **6–8** illustrate emissions spectra. FIG. **6** refers to a semiconductor body that emits blue light (luminescence maximum at λ~430 nm) and FIGS. **7** and **8** refer to semiconductor components that emit white light. In each case, the wavelength λ is plotted in nm on the abscissa, and a relative electroluminescence (EL) intensity is plotted on the ordinate.

Of the radiation emitted by the semiconductor body in FIG. **6**, only some is converted into a longer-wavelength range, so that white light is created as the mixed color. The dashed line **30** in FIG. **7** represents an emissions spectrum of a semiconductor component which emits radiation comprising two complementary wavelength ranges (blue and yellow) and thus emits combined white light. The emissions spectrum here has one maximum each at wavelengths between approximately 400 and approximately 430 nm (blue) and between approximately 550 and 580 nm (yellow). The solid line **31** represents the emissions spectrum of a semiconductor component that mixes the color white from three wavelength ranges (additive color triad comprising blue, green and red). The emissions spectrum here has one maximum each for the wavelengths of approximately 430 nm (blue), approximately 500 nm (green) and approximately 615 nm (red).

FIG. **8** shows an emissions spectrum of a white-emitting semiconductor component, which is provided with a semiconductor body that transmits an emissions spectrum as shown in FIG. **6** and in which YAG:Ce is used as the luminous substance. Of the radiation shown in FIG. **6** emitted by the semiconductor body, only some is converted into a longer-wavelength range, so that white light is created as a mixed color. The variously dashed lines **32–33** of FIG. **8** represent emissions spectra of semiconductor components according to the invention, in which the epoxy resin of the casting composition **5** has different YAG:Ce concentrations. Each emissions spectrum has one maximum intensity between lambda=420 nm and lambda=430 nm (i.e., in the blue spectrum), and between lambda=520 nm and lambda=545 nm (i.e., in the green **15** spectrum). The emission bands having the longer-wavelength maximum intensity are predominantly located in the yellow spectral range. The graph of FIG. **8** shows that in the semiconductor component of the invention, the CIE color location of the white light can be varied in a simple way by varying the luminous substance concentration in the epoxy resin.

While the foregoing specification refers specifically to a semiconductor body, for example LED chips or laser diode chips, the invention is not in the least restricted to these embodiments. The term may also be understood to mean a polymer LED, for instance, that emits an equivalent radiation spectrum.

We claim:

1. A wavelength-converting casting composition, for converting a wavelength of ultraviolet, blue or green light emitted by an electroluminescent component, comprising:

a transparent epoxy casting resin;

an inorganic luminous substance pigment powder dispersed in said transparent resin, said pigment powder comprising luminous substance pigments from Ce-doped phosphors, said pigment powder converting said ultraviolet, blue or green light into a higher wavelength light; and

said luminous substance pigments having grain sizes $\leqq$20 μm and a mean grain diameter $d_{50}\leqq 5$ μm,

wherein said luminous substance pigments have a silicone coating.

2. A light-emitting semiconductor component, comprising:

a semiconductor body formed of a semiconductor layer sequence and being capable, during an operation of the semiconductor component, of emitting electromagnetic radiation in at least one of an ultraviolet, blue, and green spectral range;

a wavelength-converting casting composition disposed in a vicinity of said semiconductor body, said casting composition being formed of a transparent epoxy casting resin and an inorganic luminous substance pigment powder dispersed in said transparent resin, said pigment powder comprising luminous substance pigments from Ce-doped phosphors and having grain sizes $\leqq$20 μm and a mean grain diameter d50$\leqq$5 μm;

said luminous substance pigments converting at least a portion of the radiation originating from the at least one of the ultraviolet, blue and green spectral range into radiation of a higher wavelength.

3. The light-emitting semiconductor component according to claim **2**, wherein said casting composition encloses at least a part of said semiconductor body.

4. The light-emitting semiconductor component according to claim **2**, wherein said semiconductor body is adapted to emit radiation in a blue spectral range having a maximum luminescence intensity at λ=430 nm or at λ=450 nm.

5. The light-emitting semiconductor component according to claim **2**, which further comprises an opaque base housing having a recess formed therein, said semiconductor

body being disposed in said recess and said recess being at least partially filled with said casting composition.

6. The light-emitting semiconductor component according to claim **2**, wherein said pigment powder comprises at least two luminous substance pigments, where at least one is selected from the luminous substance group of claim **2**.

7. The light-emitting semiconductor component according to claim **2**, wherein said semiconductor body is a blue light emitting semiconductor body, and said Ce-doped phosphor comprises types of garnet adapted to shift some of the blue light emitted by said semiconductor body into a yellow spectral range, whereby the semiconductor component emits white light.

8. The light-emitting semiconductor component according to claim **2**, wherein said semiconductor body is a blue light emitting semiconductor body, and said Ce-doped phosphor shifts some of the blue light emitted by said semiconductor body into a green and red spectral range, whereby the semiconductor component emits white light.

9. The light emitting semiconductor component according to claim **2**, wherein said semiconductor body is adapted to emit radiation in a blue spectral range having a maximum luminescence intensity at λ=430 nm or at λ=450 nm.

10. The light emitting semiconductor component according to claim **2**, wherein said semiconductor body is adapted to emit radiation in a blue spectral range having a maximum luminescence intensity at a wavelength between 420 nm and 460 nm.

* * * * *

D

US006613247B1

(12) **United States Patent**
Höhn et al.

(10) **Patent No.: US 6,613,247 B1**
(45) **Date of Patent: *Sep. 2, 2003**

(54) **WAVELENGTH-CONVERTING CASTING COMPOSITION AND WHITE LIGHT-EMITTING SEMICONDUCTOR COMPONENT**

(75) Inventors: **Klaus Höhn**, Taufkirchen; **Alexandra Debray**, Regensburg; **Peter Schlotter**, Freiburg; **Ralf Schmidt**, Vörstetten; **Jürgen Schneider**, Kirchzarten, all of (DE)

(73) Assignee: **Osram Opto Semiconductors GmbH**, Regensburg (DE)

(*) Notice: Subject to any disclaimer, the term of this patent is extended or adjusted under 35 U.S.C. 154(b) by 0 days.

This patent is subject to a terminal disclaimer.

(21) Appl. No.: **09/654,368**

(22) Filed: **Sep. 1, 2000**

Related U.S. Application Data

(62) Division of application No. 09/536,564, filed on Mar. 28, 2000, now Pat. No. 6,277,301, which is a division of application No. 09/082,205, filed on May 20, 1998, now Pat. No. 6,066,861, which is a continuation of application No. PCT/DE97/02139, filed on Sep. 22, 1997.

(30) **Foreign Application Priority Data**

Sep. 20, 1996 (DE) 096 38 667

(51) **Int. Cl.**[7] **H01L 33/00**; H01J 63/04; C09K 11/02

(52) **U.S. Cl.** ..... **252/301.36**; 252/301.4 R; 257/98; 257/99; 257/100; 313/486; 313/467; 313/468

(58) **Field of Search** ..... 252/301.36, 301.4 R; 257/99, 98, 100; 313/486, 467, 468

(56) **References Cited**

U.S. PATENT DOCUMENTS

3,453,604	A	7/1969	Geusic et al.	340/173
3,510,732	A	5/1970	Amans	317/234
3,529,200	A	9/1970	Potter	317/108
3,573,568	A	4/1971	Siegel	313/108
3,593,055	A	7/1971	Geusic	313/108 D
3,654,463	A	4/1972	Geusic et al.	250/71 R
3,691,482	A	9/1972	Pinnow et al.	332/7.51

(List continued on next page.)

FOREIGN PATENT DOCUMENTS

DE	26 42 465	3/1978
DE	38 04 293 A1	8/1989

(List continued on next page.)

OTHER PUBLICATIONS

Siemems Components 29.7/8 1991, pp. 147–149.
Drafts of the Society for the Study of Fluorescent Materials, pp. 5–14.
Decision on Trial 11520/90 concerning JP5–152609.
Applied Physics Letters, "Candela–class high–brightness InGaN/AlGaN double–heterostructure blue–light–emitting diodes", Mar. 28, 1994, 64 (13), pp. 1687–1689.
J. Applied Physics, "Large–band gap SiC, III–V nitride, and II–VI Zn–Se–based semiconductor device technologies", Aug. 1, 1994, 76 (3), pp. 1363–1398.
J. Vac. Sci. Technol., InGaN/AlGaN blue–light emitting diode, May/Jun. 1995, A13 (3), pp. 705–710.

(List continued on next page.)

Primary Examiner—C. Melissa Koslow
(74) *Attorney, Agent, or Firm*—Fish & Richardson P.C.

(57) **ABSTRACT**

The wavelength-converting casting composition is based on a transparent epoxy casting resin with a luminous substance admixed. The composition is used in an electroluminescent component having a body that emits ultraviolet, blue or green light. An inorganic luminous substance pigment powder with luminous substance pigments is dispersed in the transparent epoxy casting resin. The luminous substance is a powder of garnets, thiogallates, aluminates, or orthosilicates doped with rare earths, and preferably Ce-doped phosphors. The luminous substance pigments have particle sizes $\leqq 20\ \mu m$ and a mean grain diameter $d_{50} \leqq 5\ \mu M$.

21 Claims, 4 Drawing Sheets

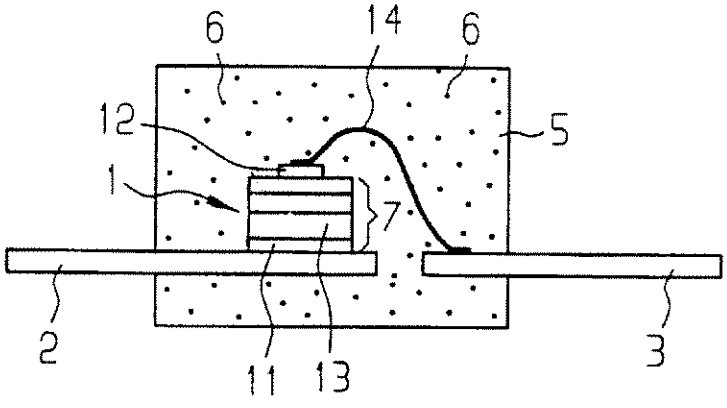

U.S. PATENT DOCUMENTS

3,699,478	A		10/1972	Pinnow et al. 332/7.51
3,819,974	A		6/1974	Stevenson et al. ..... 313/108 D
3,932,881	A		1/1976	Mita 357/17
3,942,185	A		3/1976	Lebailly 357/17
4,146,790	A		3/1979	Goetzberger et al. 250/336
4,173,495	A		11/1979	Rapp et al. ..... 136/89 PC
4,262,206	A		4/1981	Viehmann 250/483
4,298,820	A		11/1981	Bongers et al. 313/463
4,431,941	A		2/1984	Roy et al. 313/487
4,479,886	A		10/1984	Kasenga 252/301.4
4,495,514	A		1/1985	Lawrence et al. 357/67
4,550,256	A		10/1985	Berkstresser et al. 250/483.1
4,599,537	A		7/1986	Yamashita 313/501
4,716,337	A		12/1987	Huiskes et al. 313/487
4,727,283	A		2/1988	Van Kemenade et al. .. 313/487
4,734,619	A		3/1988	Havel 313/487
4,818,983	A		4/1989	Hara et al. 340/794
5,019,746	A		5/1991	Merg 313/512
5,035,513	A		7/1991	Fehrenbach et al. 374/161
5,120,214	A		6/1992	Tokarlin 428/690
5,184,114	A		2/1993	Brown 340/701
5,369,289	A		11/1994	Tamaki et al. 257/99
5,471,113	A		11/1995	DeBacker et al. 313/487
5,535,230	A		7/1996	Abe 372/43
5,602,418	A		2/1997	Imai et al. 257/627
5,652,438	A		7/1997	Sassa et al. 257/99
5,656,832	A		8/1997	Ohba et al. 257/190
5,670,798	A		9/1997	Schetzina 257/96
5,707,549	A	*	1/1998	Matsukiyo et al. ... 252/301.4 R
5,744,233	A		4/1998	Opitz et al. 428/328
5,959,316	A		9/1999	Lowery 257/98
5,998,925	A	*	12/1999	Shimizu et al. 313/503
6,066,861	A	*	5/2000	Hohn et al. 257/99
6,078,063	A		6/2000	Nakamura et al. 257/96

FOREIGN PATENT DOCUMENTS

DE	90 13 615.2		1/1991
DE	9013615.2		1/1991
EP	0 039 017	B1	11/1981
EP	0486052	A1	5/1992
EP	0936682		8/1999
GB	1332462		10/1973
GB	2053953		2/1981
GB	1589964		5/1981
JP	46-7462		12/1971
JP	47-17684		9/1972
JP	49-1221		1/1974
JP	49-24355		3/1974
JP	49-112577		10/1974
JP	50-43913		4/1975
JP	52-45181		10/1977
JP	54-41660		5/1979
JP	59-50455		4/1984
JP	63-280467		11/1988
JP	64-071053		3/1989
JP	2-91980		3/1990
JP	2-13861		5/1990
JP	4-63162		5/1992
JP	4-63163		5/1992
JP	5-152609		6/1993
JP	5-63068		8/1993
JP	6-69546		3/1994
JP	7-99345		4/1995
JP	07-176794		7/1995
JP	8-7614		1/1996
JP	9-73807		3/1997
JP	198585/1996		5/1997
JP	244339/1996		5/1997
JP	245381/1996		5/1997
JP	359004/1996		5/1997
JP	7-176794	*	4/1998
JP	2927229		5/1999
JP	11-220174		8/1999
WO	WO-98/12757	*	3/1998

OTHER PUBLICATIONS

Physical Review, "Frequency Upconversion in YF_3:Yb^{3+}, $Tm3^{+}$", Apr. 15, 1971, B3 (8), pp. 2698–2705.

J. Applied Physics, "Efficiency of Red, Green, and Blue Infrared–to–Visible Conversion Sources", Apr. 1971, pp. 1958–1960.

English abstract of Japanese Laid–open Patent 10–179471, Jul. 17, 1989.

English abstract of Japanese Laid–open 07–099345, Apr. 11, 1995.

Osinski, Marek, AlGaN/InGaN/GaN blue light emitting diode degradation under pulsed current stress, Applied Physics Letter, Aug. 12, 1996, pp. 898–900.

D.J. Robbins: "The Effects of Crystal Field and Temperature on the Photoluminescence Excitation of Ce^{3+} in YAG", J. Electrchem. Soc.: Solid State Science and Technology1979, vol. 126, No. 9, pp. 1550–1555.

Glen A. Slack et al.: "Optical Absorption of $Y_3A_{15}O_{12}$ from 10– to 55000–cm Wave Numbers", Physical Review, vol. 177, No. 3, Jan. 15, 1969, pp. 1308–1314.

Shuji Nakamura et al.: "The blue laser diode: GaN based Light emitters and lasers", Springer Vertag, Berlin, 1997, pp. 216–219, 328.

G.. Blasse et al.,: "A New Phosphor for Flying—Spot Cathode–Ray Tubes for Color Television: Yellow Emitting $Y^3Al_5O^{12}$–Ce_{3+}", Applied Physics Letter, vol. 11, No. 2, 15, pp. 53, 54.

B.M.J. Smets: "Phosphors Based On Rare–Earths, A New Era in Fluorescent Lighting", Materials Chemistry and Physics, 16 (1987), pp. 283–299.

Cheo et al.: "White Light Emitting glasses", Journal Solid State Chemistry, 1991, pp. 17–29.

Sato et al.: "Full–Color . . . Diode", Jap. J. Applied Physics, vol. 35, (1996), pp. L838–L839.

Siemens Forsch.—Entwichkl.—Ber. Bd (1997), No. 3, p. 162 [Siemens Research and Development Reports], vol. 6.

S.N. Mohammad et al.: "emerging gallium Nitride Based Devices", Proceeding of the IEEE, vol. 83, No. 10, Oct. 1995, pp. 1306–1355.

Hakkoutai Dougaku–Kai (ed.), "Keikoutai Handbook" (Handbook on Fluorescent Materials), 1st edition, published Dec. 25, 1987, pp. 275–277.

Nikkei Sangyou Shimbun (Nikkei Industrial Newspaper), Sep. 13, 1996, first sheet, "White LED lamps".

Translation of Jun. 5, 2001 Office Action in Japanese Patent Application 10–514190.

Preliminary Decision on Demand for Trial of JP 2,927,279.

English Translation of Japanese 01175103 A, Jul. 11, 1989.

English Translation of Japanese 01260707 A, Oct. 18, 1989.

Phosphor Handbook, English Translation of (BAJ).

"Phosphor Handbook", Ohm 1987, p. 383.

"Phosphor and Emitter", Osram GmbH, Jun. 1997.

English Translation of Japanese Patent Application No. 018010, Filed Mar. 31, 1997, Nichia Chemical Industries Ltd.

Product Information –Philips Lighting, Fluorescent Powder, 1990.

Translation of the newspaper "Nikkei Sangyo Shimbun", issued on Sep. 13, 1996, *White–LED Lamp Efficient Light Emission Half a Production Cost*, Nichia Chemical.

"Phosphor Handbook", Ohm 1987, S. 166–175, 268–276.

* cited by examiner

FIG 1

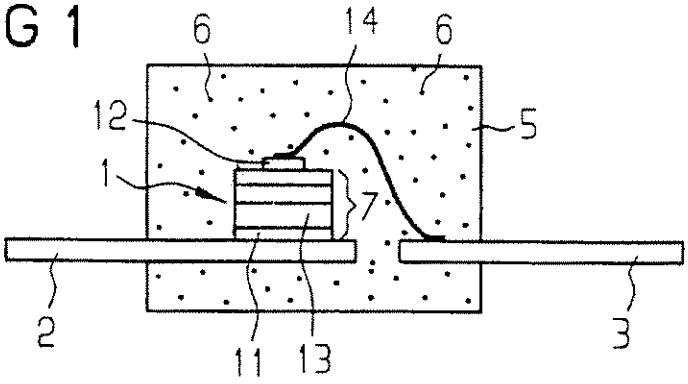

FIG 2

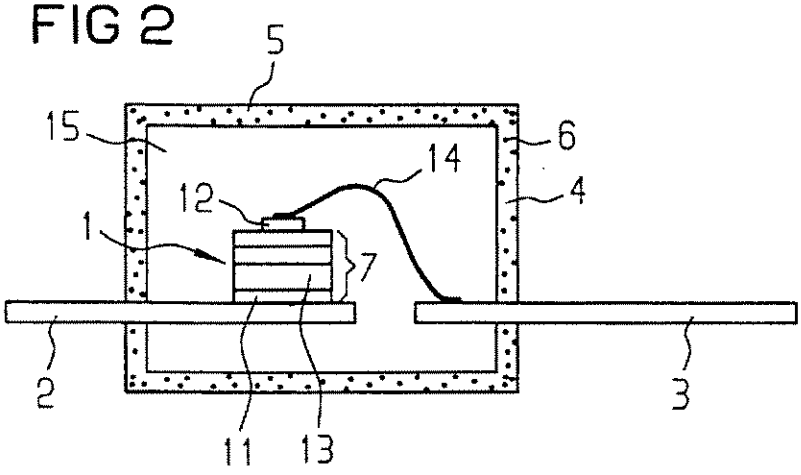

FIG 3

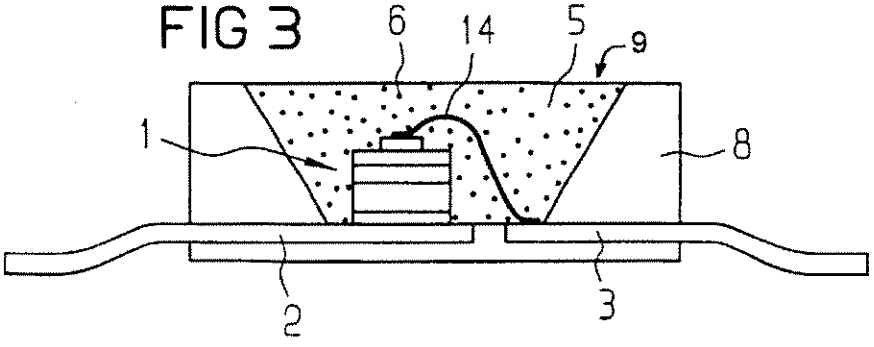

FIG 4

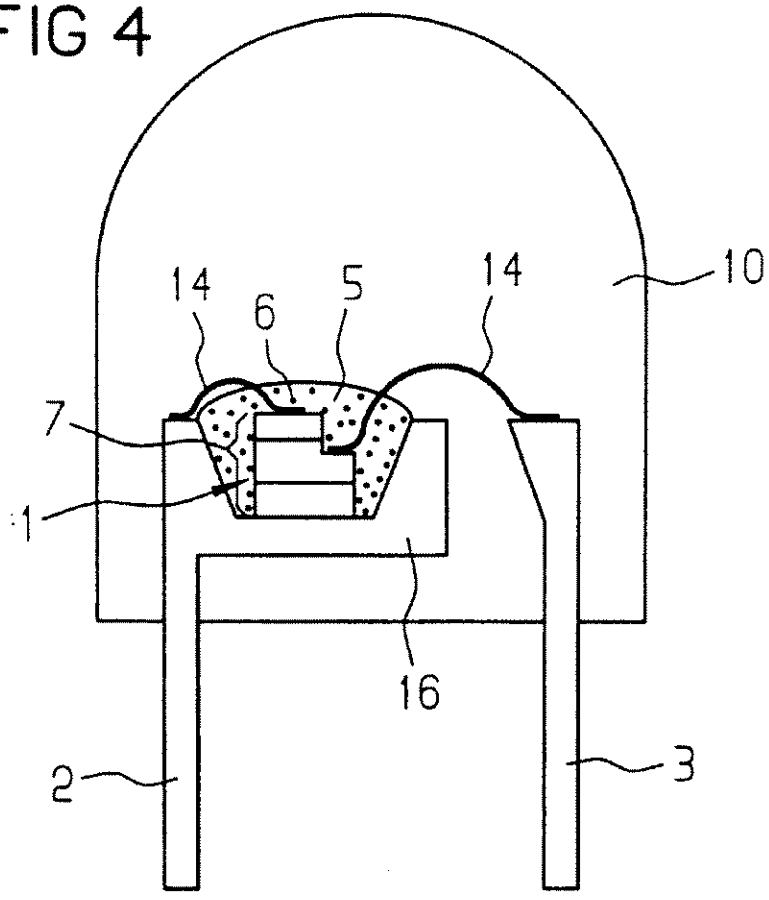

FIG 5

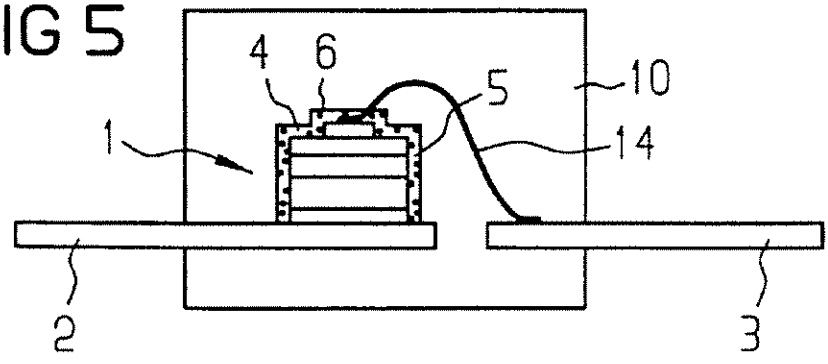

FIG 6

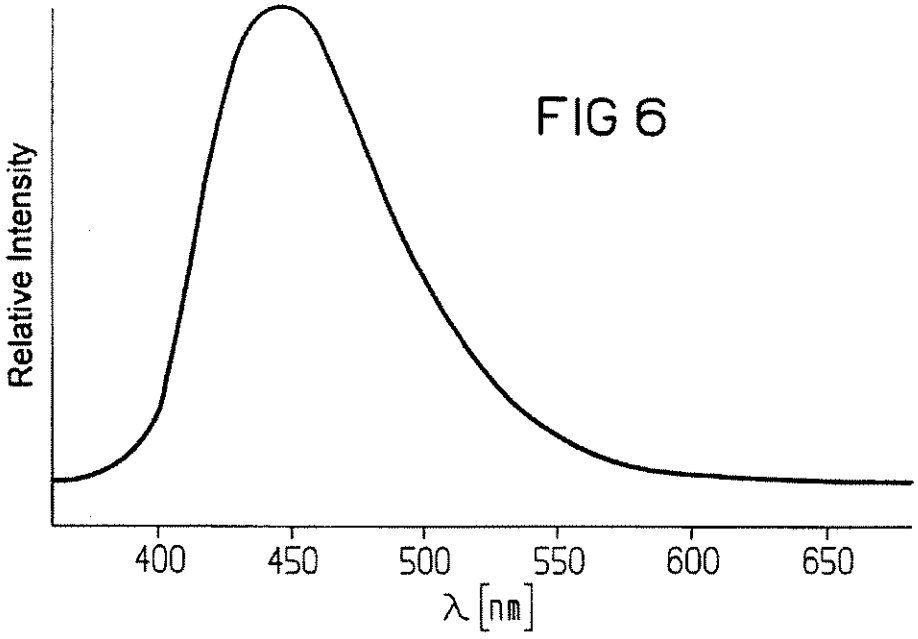
Relative Intensity
400
450
500
550
600
650
λ [nm]

FIG 7

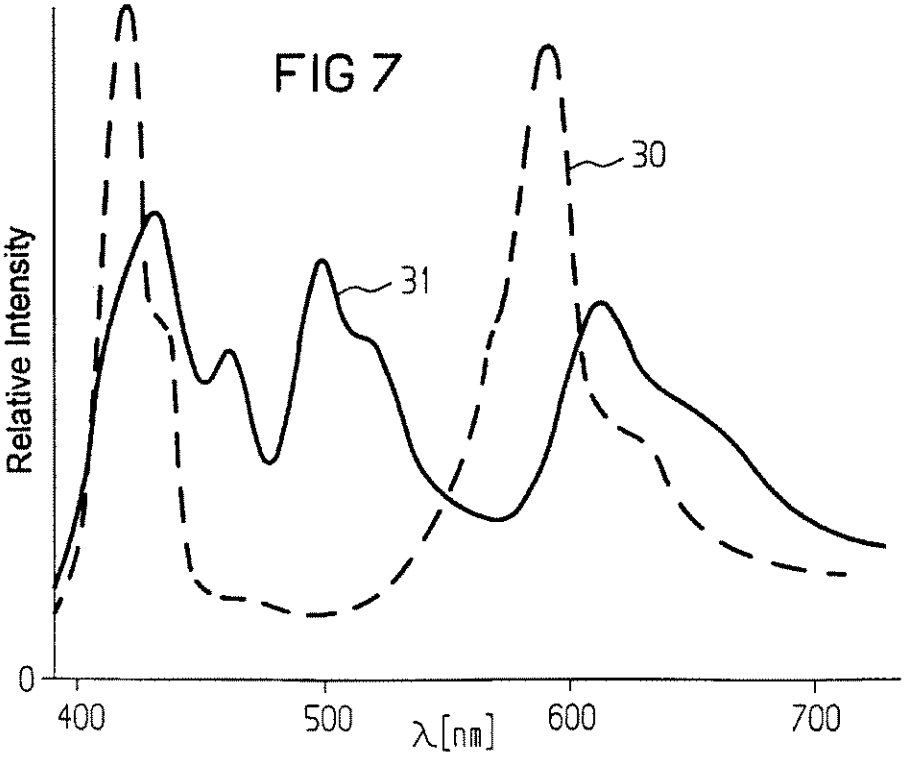
Relative Intensity
30
31
0
400
500
600
700
λ [nm]

FIG 8

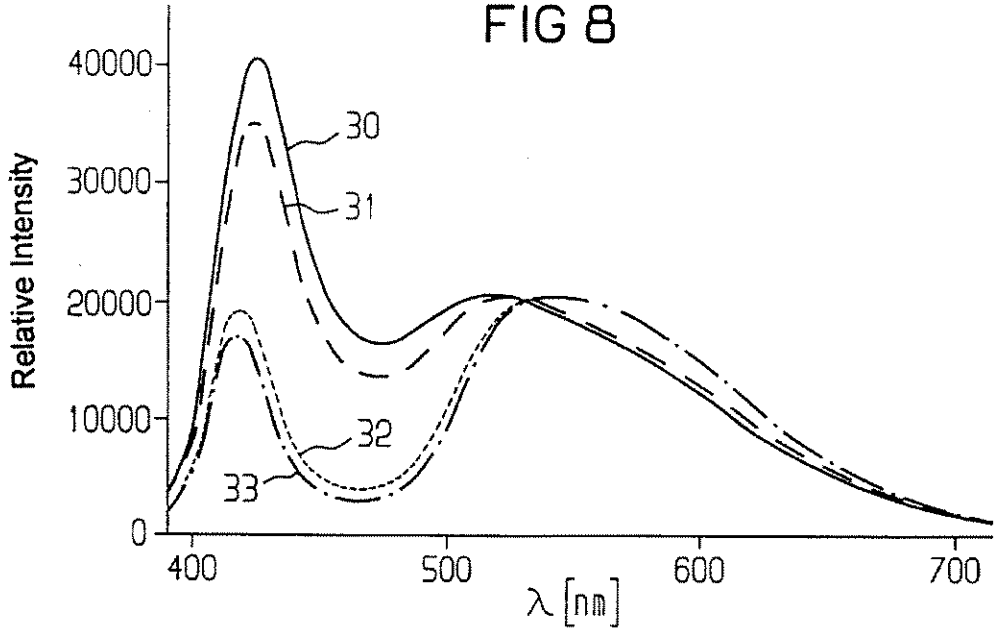
Relative Intensity
40000
30000
20000
10000
0
400
500
600
700
λ [nm]
30
31
32
33

WAVELENGTH-CONVERTING CASTING COMPOSITION AND WHITE LIGHT-EMITTING SEMICONDUCTOR COMPONENT

CROSS-REFERENCE TO RELATED APPLICATION

This is a division of copending application Ser. No. 09/536,564, filed Mar. 28, 2000, now U.S. Pat. No. 6,277,301, which is a division of application Ser. No. 09/082,205, filed May 20, 1998, now U.S. Pat. No. 6,066,861, which was a continuation of international application PCT/DE97/02139, filed Sep. 22, 1997, which designated the United States.

BACKGROUND OF THE INVENTION

1. Field of the Invention

The invention relates to a wavelength-converting casting composition based on a transparent epoxy casting resin which is mixed with a luminous substance, for an electroluminescent component having a body that emits ultraviolet, blue or green light.

2. Description of the Related Art

A component of that type has become known, for instance, from German published, non-prosecuted patent application DE 38 04 293. The reference describes an arrangement with an electroluminescent diode or laser diode, in which the emissions spectrum emitted by the diode is shifted toward longer wavelengths, by means of a plastic element mixed with a fluorescing, light-converting, organic colorant. The light emitted by the arrangement as a result has a different color from what the light emitting diode emitted. Depending on the type of colorant added to the plastic, it is possible to produce LED arrays that light up in different colors with one and the same type of light-emitting diode (LED).

In many potential applications for LEDs, such as in display elements in motor vehicle dashboards, illumination in aircraft and automobiles, and in LED displays capable of showing full color, there is an increasing demand for LED arrays with which mixed color light and in particular white light can be generated.

However, the prior art casting compositions of the type referred to at the outset with organic luminous substances exhibit a shift in the color location, that is, the color of the light emitted by the electroluminescent component, under temperature and temperature/humidity stresses.

Japanese patent disclosure JP-07 176 794-A describes a white-light-emitting planar light source, in which two diodes that emit blue light are disposed on one face end of a transparent plate and emit light into the transparent plate. The transparent plate is coated on one of the two opposed main sides with a fluorescing substance that emits light when it is excited with the blue light of the diodes. The light emitted by the fluorescing substance has a different wavelength from the blue light emitted by the diodes. In this known component, it is especially difficult to apply the fluorescing substance in such a way that the light source emits homogeneous white light. Moreover, replicability and mass production presents major problems, because even slight fluctuations in the layer thickness of the fluorescing layer, for instance from irregularities of the surface of the transparent plate, cause a change in the white of the light emitted.

SUMMARY OF THE INVENTION

It is accordingly an object of the invention to provide a wavelength-converting casting mass, which overcomes the

above-mentioned disadvantages of the prior art devices and methods of this general type and with which electroluminescent components can be produced that emit homogeneous mixed-colored light, and which enables mass production at reasonable engineering effort and expense and with maximally replicable component characteristics. The emitted light should be color-stable even under temperature and temperature/humidity stresses. It is a further object to specify a use for the casting mass and a method for producing the composition.

With the foregoing and other objects in view there is provided, in accordance with the invention, a wavelength-converting casting composition, for converting a wavelength of ultraviolet, blue or green light emitted by an electroluminescent component, comprising:

a transparent epoxy casting resin;

an inorganic luminous substance pigment powder dispersed in the transparent epoxy resin, the pigment powder comprising luminous substance pigments from a phosphorus group having the general formula $A_3B_5X_{12}$:M;

the luminous substance pigments having grain sizes $\leqq 20$ μm and a mean grain diameter $d_{50} \leqq 5$ μm.

In accordance with an added feature of the invention, the mean grain diameter d_{50} of the luminous substance pigments is between one and two micrometers.

Inorganic/mineral luminous substances are extremely stable with regard to temperature and temperature/humidity stresses.

In accordance with an additional feature of the invention, the composition includes the following parts:

a) epoxy casting resin $\geqq 60\%$ by weight;

b) luminous substance pigments >0 and $\leqq 25\%$ by weight;

c) thixotropic agent >0 and $\leqq 10\%$ by weight;

d) mineral diffusor >0 and $\leqq 10\%$ by weight;

e) processing adjuvant >0 and $\leqq 3\%$ by weight;

f) hydrophobic agent >0 and $\leqq 3\%$ by weight; and

g) adhesion promoters >0 and $\leqq 2\%$ by weight.

Suitable epoxy casting resins are described for instance in German published, non-prosecuted patent application 26 42 465 (pp. 4–9, in particular examples 1–4), and in European patent disclosure EP 0 039 017 and U.S. Pat. No. 4,365,052 (pp. 2–5, in particular examples 1–8 appearing in both the EP and U.S. patents). The disclosures of those documents are hereby expressly incorporated by reference.

Pyrogenic silicic acid is for instance used as the thixotropic agent. The thixotropic agent is used to thicken the epoxy casting resin, so as to reduce the sedimentation of the luminous substance pigment powder. The flow and wetting properties are also adjusted for processing the casting resin

CaF_2 is preferably used as a mineral diffusor for optimizing the luminous pattern of the component.

Glycol ether is for instance suitable as a processing adjuvant. It improves the compatibility between the epoxy casting resin and the luminous substance pigment powder and is thus used to stabilize the dispersion of luminous substance pigment powder and epoxy casting resin. To that end, surface modifiers based on silicone can also be employed.

The hydrophobic agent, such as liquid silicone wax, is also used to modify the pigment surface; in particular, the compatibility and wettability of the inorganic pigment surface is improved with the organic resin.

The adhesion promoter, such as functional alkoxysiloxane, improves the adhesion between the pig-

ments and the epoxy resin in the cured state of the casting composition. As a result it is attained that the boundary face between the epoxy resin and the pigments will not rupture, for instance in response to temperature fluctuations. Gaps between the epoxy resin and the pigments would cause light losses in the component.

The epoxy casting resin, preferably with a reactive triple oxiran ring, preferably includes a monofunctional and/or multifunctional epoxy casting resin system (≧80% by weight, such as bisphenol-A-diglycidyl ether), a reactive diluent (≦10% by weight, such as aromatic monoglycidyl ether), a multifunctional alcohol (≦5% by weight), a degassing agent based on silicone (≦1% by weight), and a decolorizing component to adjust the color number (≦1% by weight).

In accordance with another feature of the invention, the luminous substance pigments are substantially spherical particles or flakelike particles. The tendency to clumping of such pigments is advantageously very slight. The H_2O content is below 2%.

In the production and processing of epoxy casting resin components with inorganic luminous substance pigment powders, in general not only wetting but also sedimentation problems occur. Especially luminous substance pigment powders with d_{50}≦5 μm have a strong tendency to clumping. In the last-named composition of the casting composition, the luminous substance pigments with the above-indicated particle size, can advantageously be substantially free of clumps and can be dispersed homogeneously in the epoxy casting resin. This dispersion is stable even under long-term storage of the casting composition. Essentially no problems of wetting and/or sedimentation occur.

In accordance with a further feature of the invention, the luminous substance pigments are particles of Ce-doped garnets, such as, particularly, YAG:Ce particles. An advantageous dopant concentration is 1%, for example, and an advantageous luminous substance concentration is 12%, for example. The preferred high-purity luminous substance pigment powder also advantageously has an iron content of ≦5 ppm. A high iron content leads to high light losses in the component. The luminous substance pigment powder is highly abrasive. The iron content in the casting composition can therefore rise considerably during production. Iron contents in the casting composition <20 ppm are advantageous.

The inorganic luminous substance YAG:Ce has the particular advantage, among others, that this involves insoluble color pigments with an index of refraction of approximately 1.84. As a result, along with the wavelength conversion, dispersion and scattering effects occur that lead to good mixing of blue diode emissions with yellow converter radiation.

It is also especially advantageous that the luminous substance concentration in the epoxy resin when inorganic luminous substance pigments are used is not limited by the solubility, as is the case for organic colorants.

For further reduction of clumping, the luminous substance pigments may advantageously be provided with a silicone coating.

With the above and other objects in view there is also provided, in accordance with the invention, a method of producing a wavelength-converting casting composition, for converting a wavelength of ultraviolet, blue or green light emitted by an electroluminescent component, the method which comprises:

providing a base of transparent epoxy casting resin;

providing a luminous substance pigment powder of luminous substance pigments from a phosphorus group having the general formula $A_3B_5X_{12}$:M;

tempering the luminous substance pigment powder at a temperature of ≧200° C. and subsequently mixing the tempered pigment powder with the epoxy casting resin.

Tempering is preferably effected for approximately ten hours. As a result, again the tendency to clumping can be reduced.

As an alternative or in addition for this purpose, the luminous substance pigment powder, before being mixed with the epoxy casting resin, can be slurried in a high-boiling point alcohol and subsequently dried. A further possibility for reducing clumping is to add a hydrophobic silicone wax to the luminous substance pigment powder before the powder is mixed with the epoxy casting resin. Surface stabilization of the phosphors by heating the pigments in the presence of glycol ethers, for instance for 16 hours at T>60° C., is especially advantageous.

To avoid problematic contamination upon dispersal of the luminous substance pigments, caused by abrasion, reaction vessels, agitators and dispersing devices as well as rolling mechanisms of glass, corundum, carbide and nitride materials as well as especially hardened types of steel are used. Clump-free luminous substance dispersions are also obtained by ultrasonic methods or by the use of screens and glass ceramic frits.

An especially preferred inorganic luminous substance for producing optoelectronic components that light up white is the phosphorous YAG:Ce ($Y_3Al_5O_{12}:Ce^{3+}$). This phosphorous can be especially simply mixed with transparent epoxy casting resins conventionally used in LED technology. Also conceivable as luminous substances are other garnets, doped with rare earths, such as $Y_3Ga_5O_{12}:Ce^{3+}$, $Y(Al,Ga)_5O_{12}:Ce^{3+}$, and $Y(Al,Ga)_5O_{12}:Tb^{3+}$.

To generate mixed-colored light, the thiogallates doped with rare earths are moreover especially suitable, examples being $CaGa_2S_4:Ce^{3+}$ and $SrGa_2S_5:Ce^{3+}$. Once again, the use of aluminates doped with rare earths, such as $YAlO_3:Ce^{3+}$, $YGaO_3:Ce^{3+}$, $Y(Al,Ga)O_3:Ce^{3+}$, and orthosilicates doped with rare earths, $M_2SiO_5:Ce^{3+}$ (M:Sc,Y,Sc), such as $Y_2SiO_5:Ce^{3+}$ is conceivable. In all the yttrium compounds, the yttrium can in principle also be replaced with scandium or lanthanum.

Therefore, in the phosphorus group $A_3B_5X_{12}$:M, the variables may stand for the following exemplary elements: A=Y, Ca, Sr; B=Al, Ga, Si; X=O, S; and M=Ce^{3+}, Tb^{3+}. The variables can represent a single one of the listed exemplary elements. Alternatively, the variables can represent a mixture of two or more of the listed exemplary elements.

Preferably, the casting composition according to the invention is used in a radiation-emitting semiconductor body, in particular with an active semiconductor layer or semiconductor layer sequence of $Ga_xIn_{1-x}N$ or $Ga_xAl_{1-x}N$, which in operation emits an electromagnetic radiation of the ultraviolet, blue and/or green spectral range. The luminous substance particles in the casting composition convert some of the radiation originating in this spectral range into radiation with a longer wavelength, in such a way that the semiconductor component emits mixed radiation, and in particular mixed-colored light is comprising this radiation as well as radiation from the ultraviolet, blue and/or green spectral range. This means for instance that the luminous substance particles spectrally selectively absorb some of the radiation emitted by the semiconductor body and emit in the longer-wave range. Preferably, the radiation emitted by the semiconductor body has a relative maximum intensity at a wavelength lambda λ≦520 nm, and the wavelength range spectrally selectively absorbed by the luminous substance particles is outside this maximum intensity.

It is also advantageously possible for a plurality of different kinds of luminous substance particles, which emit at different wavelengths, to be dispersed in the casting composition. This is preferably achieved by means of different doping in different host lattices. This advantageously makes it possible to generate manifold color mixtures and color temperatures of the light emitted by the component. This is especially of interest for LEDs capable of emitting full color.

In a preferred use of the casting composition of the invention, a radiation-emitting semiconductor body (such as an LED chip) is at least partly enclosed by the casting composition. The casting composition is preferably simultaneously used as a component envelope (housing). The advantage of a semiconductor component in accordance with this embodiment is essentially that conventional production lines used to make conventional LEDs (such as radial LEDs) can be used to produce it. For the component envelope, instead of the transparent plastic used for this purpose in conventional LEDs, the casting composition can simply be employed.

With the casting composition of the invention, it is possible in a simple way, with a single colored light source, particularly an LED with a single semiconductor body that emits blue light, to create mixed-colored and in particular white light. For instance to generate white light with a semiconductor body that emits blue light, some of the radiation emitted by the semiconductor body is converted out of the blue spectral range into the yellow spectral range, which is complementary in color to blue, by means of inorganic luminous substance particles.

The color temperature or color location of the white light can be varied by a suitable choice of the luminous substance, its particle size, and its concentration. In addition, luminous substance mixtures can also be employed, and as a result advantageously the desired tonality of the color of the emitted light can be adjusted very precisely.

Especially preferably, the casting composition is used in a radiation-emitting semiconductor body in which the emitted radiation spectrum has a maximum intensity at a wavelength between 420 nm and 460 nm, and in particular at 430 nm (examples being semiconductor bodies based on $Ga_xAl_{1-x}N$) or 450 nm (such as semiconductor bodies based on $Ga_xIn_{1-x}N$). With such a semiconductor component, nearly all the colors and mixed colors in the CIE chromaticity diagram can advantageously be generated.

Instead of the radiation-emitting semiconductor body of electroluminescing semiconductor material, however, some other electroluminescing material may be used, such as polymer material.

With the objects of the invention is view there is further provided, in accordance with the invention, a light-emitting semiconductor component, comprising:

- a semiconductor body formed of a semiconductor layer sequence and being capable, during an operation of the semiconductor component, of emitting electromagnetic radiation in at least one of an ultraviolet, blue, and green spectral range;
- a wavelength-converting casting composition disposed in a vicinity of the semiconductor body, the casting composition being formed of a transparent epoxy casting resin and an inorganic luminous substance pigment powder dispersed in the transparent epoxy resin, the pigment powder comprising luminous substance pigments from a phosphorus group having the general formula $A_3B_5X_{12}$:M and having grain sizes $\leqq 20$ μm and a mean grain diameter $d_{50} \leqq 5$ μM;
- the luminous substance pigments converting a portion of the radiation originating from the ultraviolet, blue and green spectral range into radiation of a higher wavelength, such that the semiconductor component emits mixed radiation including the higher-wavelength radiation and radiation from at least one of the ultraviolet, blue and green spectral range.

In other words, the casting composition is especially suitable for a light-emitting semiconductor component (for instance an LED), in which the electroluminescing semiconductor body is disposed in a recess of a prefabricated housing, optionally already provided with a leadframe, and the recess is provided with the casting composition. This kind of semiconductor component can be produced in great numbers on conventional production lines. All that is needed, after mounting of the semiconductor body in the housing, is to fill the recess with the casting composition.

A semiconductor component that emits white light can be produced with the casting composition according to the invention advantageously by choosing the luminous substance in such a way that a blue radiation emitted by the semiconductor body is converted into complementary wavelength ranges, in particular blue and yellow, or additive color triads, such as blue, green and red. The yellow or green and red light is generated via the luminous substances. The color tonality (color location in the CIE chromaticity diagram) of the white light thus produced can then be varied by means of a suitable choice of the luminous substance or luminous substances in terms of their mixture and concentration.

To improve the mixing of the radiation emitted by an electroluminescing semiconductor body with the radiation converted by the luminous substance and thus to improve the homogeneity of color of the light emitted by the component, in an advantageous feature of the casting composition according to the invention a blue-luminescing colorant, which attenuates a so-called directional characteristic of the radiation emitted by the semiconductor body. The term "directional characteristic" is understood to mean that the radiation emitted by the semiconductor body has a preferential emission direction.

A semiconductor component according to the invention that emits white light, with an electroluminescing semiconductor body emitting blue light, can be especially preferably achieved by admixing the inorganic luminous substance YAG:Ce ($Y_3Al_5O_{12}:Ce^{3+}$) with the epoxy resin used for the casting composition. Some of the blue radiation emitted by the semiconductor body is shifted by the inorganic luminous substance ($Y_3Al_5O_{12}:Ce^{3+}$) into the yellow spectral range and thus into a wavelength range that is complementary in color to the color blue. The color tonality (color location in the CIE chromaticity diagram) of the white light can then be varied by means of a suitable choice of the colorant concentration.

In addition, light-scattering particles, so-called diffusors, can be added to the casting composition. As a result, the color impression and the emission characteristics of the semiconductor component can advantageously be still further optimized.

With the casting composition of the invention, advantageously an ultraviolet radiation emitted by an electroluminescing semiconductor body along with the visible radiation can advantageously be converted into visible light. This markedly increases the brightness of the light emitted by the semiconductor body.

A particular advantage of semiconductor components according to the invention that emit white light, and in which YAG:Ce is used in particular as the luminescence-

converting colorant, is that this luminous substance on excitation with blue light causes a spectral shift of approximately 100 nm between absorption and emission. This leads to a substantial reduction and reabsorption of the light emitted by the luminous substance and thus to a higher light yield. Moreover, YAG:Ce advantageously has high thermal and photochemical (such as UV) stability (substantially higher than organic luminous substances) so that even white-emitting diodes for outdoor-use and/or high temperature ranges can be produced.

YAG:Ce has by now proved itself to be the best-suitable luminous substance in terms of reabsorption, light yield, thermal and photochemical stability, and processability. However, the use of other Ce-doped phosphors, in particular Ce-doped types of garnet, is also conceivable.

The wavelength conversion of the primary radiation is determined by the crystal field cleavage of the active transition metal centers in the host lattice. By substituting Gd and/or Lu for Y, or Ga for Al in the $Y_3Al_5O_{12}$ garnet lattice, the emission wavelengths can be shifted in various ways, and this can also be done by the type of doping. By substituting Eu^{3+} and/or Cr^{3+} for Ce^{3+} centers, corresponding shifts can be brought about. Corresponding dopings with Nd^{3+} and Er^{3+} even make it possible, because of the greater ion radii and thus reduced crystal field cleavage, to make components that emit infrared (IR) light.

Other features which are considered as characteristic for the invention are set forth in the appended claims.

Although the invention is illustrated and described herein as embodied in a wavelength-converting casting composition, its use, and method for its production, it is nevertheless not intended to be limited to the details shown, since various modifications and structural changes may be made therein without departing from the spirit of the invention and within the scope and range of equivalents of the claims.

The construction and method of operation of the invention, however, together with additional objects and advantages thereof will be best understood from the following description of specific embodiments when read in connection with the accompanying drawings.

BRIEF DESCRIPTION OF THE DRAWINGS

FIG. **1** is a schematic sectional view of a first semiconductor component with a casting composition according to the invention;

FIG. **2** is a schematic sectional view of a second semiconductor component with a casting composition according to the invention;

FIG. **3** is a schematic sectional view of a third semiconductor component with a casting composition according to the invention;

FIG. **4** is a schematic sectional view of a fourth semiconductor component with a casting composition according to the invention;

FIG. **5** is a schematic sectional view of a fifth semiconductor component with a casting composition according to the invention;

FIG. **6** is a graph of an emission spectrum of a semiconductor body that emits blue light, with a layer sequence on the basis of GaN;

FIG. **7** is a graph of the emissions spectra of two semiconductor components with a casting composition according to the invention, which emit white light; and

FIG. **8** is a graph of the emissions spectra of further semiconductor components that emit white light.

DESCRIPTION OF THE PREFERRED EMBODIMENTS

Reference is now had to the figures of the drawing in which elements that are identical or that function identically are identified by the same reference numerals throughout.

In the light-emitting semiconductor component of FIG. **1**, the semiconductor body **1** is secured by its back-side contact **11** to a first electrical terminal **2** by means of an electrically conductive joining means such as a metal solder or an adhesive. The front-side contact **12** is joined to a second electrical terminal **3** by means of a bond wire **14**.

The free surfaces of the semiconductor body **1** and portions of the electrical terminals **2** and **3** are enclosed directly by a hardened, wavelength-converting casting or potting composition **5**. The casting composition preferably has the following: epoxy casting resin 80 to 90% by weight, luminous substance pigments (YAG: Ce)≦15% by weight, diethylene glycol monomethyl ether ≦2% by weight, Tegopren 6875-45 (a processing adjustment, an additive for keeping the surface of the resin free from bubbles, craters and similar faults)≦2% by weight, Aerosil 200 (a thixotropic agent)≦5% by weight.

The exemplary embodiment of a semiconductor component according to the invention shown in FIG. **2** differs from that of FIG. **1** in that the semiconductor body **1** in portions of the electrical terminals **2** and **3** are enclosed not by a wavelength-converting potting mass but by a transparent envelope **15**. The transparent envelope **15** does not cause any change in the wavelength of the radiation emitted by the semiconductor body **1** and for instance comprises an epoxy, silicone or acrylate resin conventionally used in LED technology, or some other suitable radiation-permeable material, such as inorganic glass.

A layer **4** is applied to the transparent envelope **15**. The layer **4** comprises a wavelength-converting casting composition and, as shown in FIG. **2**, covers the entire surface of the envelope **15**. It is equally conceivable for the layer **4** to cover only a portion of the surface. The layer **4** for instance comprises a transparent epoxy resin which is mixed with luminous substance particles **6**. Once again, for a semiconductor component that emits white light, YAG:Ce is preferred as the luminous substance.

FIG. **3** illustrates a particularly advantageous and preferred embodiment of the invention. The first and second electrical terminals **2**, **3** are embedded in an opaque, and optionally prefabricated, basic housing **8** that has a recess **9**. The term "prefabricated" is understood to mean that the basic housing **8** is already finished at the terminals **2**, **3**, for instance by means of injection molding, before the semiconductor body is mounted on the terminal **2**. The basic housing **8**, by way of example, is formed of opaque plastic, and in terms of its form the recess **9** is embodied as a reflector **17** for the radiation emitted by the semiconductor body in operation (the reflection optionally being achieved by means of suitable coating of the inside walls of the recess **9**). Such basic housings **8** are used in particular for LEDs that are surface-mounted on printed circuit boards. They are applied, before mounting of the semiconductor body, to a conductor strip (lead frame) that has the electrical terminals **2**, **3**, the application for instance being done by injection molding.

The recess **9** is filled with a casting composition **5**, whose composition is equivalent to that given above in conjunction with the description of FIG. **1**.

FIG. **4** shows a so-called radial diode. Here, the electroluminescing semiconductor body **1** is secured, for instance by

soldering or adhesive bonding, in a part **16**, embodied as a reflector, of the first electrical terminal **2**. Such housing constructions are known in LED technology and therefore require no further description here. The free surfaces of the semiconductor body **1** are covered directly by a casting composition **5** containing luminous substance particles **6**, and the casting composition in turn is surrounded by a further transparent housing envelope **10**.

It will be appreciated by those skilled in the art that, in the construction of FIG. **4** as well, analogously to the component of FIG. **1**, an integral envelope comprising hardened casting composition **5** with luminous substance particles **6**, may also be used.

In the exemplary embodiment of FIG. **5**, a layer **4** (see the list of materials given above) is coated directly on the semiconductor body **1**. The semiconductor body **1** and portions of the electrical terminals **2**, **3** are enclosed by a further transparent housing envelope **10**. The latter causes no change in wavelength of the radiation that has passed through the layer **4**, and it is made for instance from a transparent epoxy resin that is usable in LED technology, or from glass.

Such semiconductor bodies **1** provided with a layer **4** and without an envelope can naturally advantageously be used in all the housing constructions known from LED technology (such as SMD housings, and radial housings; see FIG. **4**).

In all the components described above, in order to optimize the color impression of the light emitted and to adapt the emission characteristics, the casting composition **5**, optionally the transparent envelope **15**, and/or optionally the further transparent envelope **10** may have light-scattering particles, advantageously so-called diffusers. Examples of such diffusers are mineral fillers, in particular CaF_2, TiO_2, SiO_2, $CaCO_3$, or $BaSO_4$, or organic pigments. These materials can easily be added to epoxy resins.

FIGS. **6–8** illustrate emissions spectra. FIG. **6** refers to a semiconductor body that emits blue light (luminescence maximum at λ~430 nm) and FIGS. **7** and **8** refer to semiconductor components that emit white light. In each case, the wavelength λ is plotted in nm on the abscissa, and a relative electroluminescence (EL) intensity is plotted on the ordinate.

Of the radiation emitted by the semiconductor body in FIG. **6**, only some is converted into a longer-wavelength range, so that white light is created as the mixed color. The dashed line **30** in FIG. **7** represents an emissions spectrum of a semiconductor component which emits radiation comprising two complementary wavelength ranges (blue and yellow) and thus emits combined white light. The emissions spectrum here has one maximum each at wavelengths between approximately 400 and approximately 430 nm (blue) and between approximately 550 and 580 nm (yellow). The solid line **31** represents the emissions spectrum of a semiconductor component that mixes the color white from three wavelength ranges (additive color triad comprising blue, green and red). The emissions spectrum here has one maximum each for the wavelengths of approximately 430 nm (blue), approximately 500 nm (green) and approximately 615 nm (red).

FIG. **8** shows an emissions spectrum of a white-emitting semiconductor component, which is provided with a semiconductor body that transmits an emissions spectrum as shown in FIG. **6** and in which YAG:Ce is used as the luminous substance. Of the radiation shown in FIG. **6** emitted by the semiconductor body, only some is converted into a longer-wavelength range, so that white light is created as a mixed color. The variously dashed lines **32–33** of FIG. **8** represent emissions spectra of semiconductor components according to the invention, in which the epoxy resin of the casting composition **5** has different YAG:Ce concentrations. Each emissions spectrum has one maximum intensity between lambda=420 nm and lambda=430 nm (i.e., in the blue spectrum), and between lambda=520 nm and lambda=545 nm (i.e., in the green **15** spectrum). The emission bands having the longer-wavelength maximum intensity are predominantly located in the yellow spectral range. The graph of FIG. **8** shows that in the semiconductor component of the invention, the CIE color location of the white light can be varied in a simple way by varying the luminous substance concentration in the epoxy resin.

While the foregoing specification refers specifically to a semiconductor body, for example LED chips or laser diode chips, the invention is not in the least restricted to these embodiments. The term may also be understood to mean a polymer LED, for instance, that emits an equivalent radiation spectrum.

We claim:

1. A wavelength-converting casting composition, comprising:

a transparent epoxy casting resin:

an inorganic luminous substance pigment powder dispersed in said transparent casting resin, said pigment powder comprising luminous substance pigments selected from the group consisting of garnets doped with rare earths; thiogallates doped with rare earths; aluminates doped with rare earths; and orthosilicates doped with rare earths; and

said luminous substance pigments having grain sizes $\leqq 20$ μm and a mean grain diameter d_{50} $\leqq 5$ μm.

2. The casting composition according to claim **1**, wherein said luminous substance pigments are substantially spherical particles.

3. The casting composition according to claim **1**, wherein said luminous substance pigments are flakelike particles.

4. The casting composition according to claim **1**, wherein the mean grain diameter d_{50} of said luminous substance pigments is between one and two micrometers.

5. The casting composition according to claim **1**, which comprises the following components:

a) epoxy casting resin $\geqq 60\%$ by weight;

b) luminous substance pigments >0 and $\leqq 25\%$ by weight;

c) thixotropic agent >0 and $\leqq 10\%$ by weight;

d) mineral diffusor >0 and $\leqq 10\%$ by weight;

e) processing adjuvant >0 and $\leqq 3\%$ by weight;

f) hydrophobic agent >0 and $\leqq 3\%$ by weight; and

g) adhesion promoters >0 and $\leqq 2\%$ by weight.

6. The casting composition according to claim **1**, wherein said luminous substance pigments are Ce-doped garnets.

7. The casting composition according to claim **1**, wherein said luminous substance pigments are YAG:Ce based particles.

8. The casting composition according to claim **1**, which comprises a content of iron $\leqq 20$ ppm.

9. The casting composition according to claim **1**, wherein said luminous pigment are formed with a silicone coating.

10. The casting composition according to claim **1**, wherein said luminous substances pigment powder converts a wavelenght of ultraviolet, blue, or green light into a relatively longer wavelenght.

11. The casting composition according to claim **1**, which comprises light-scattering particles added to said casting resin.

12. A light emitting semiconductor component, comprising;

a semiconductor body formed of a semiconductor layer sequence and being capable, during an operation of the semiconductor component, of emitting electromagnetic radiation in a first spectral range selected from ultraviolet, blue, and green;

wavelength-converting casting composition disposed in a vicinity of said semiconductor body and formed of a transparent epoxy casting resin in an inorganic luminous substance pigment powder dispersed in said transparent casting resin;

said pigment powder comprising luminous substance pigments selected from the group consisting of garnets dopes with rare earths; thiogallates doped with rare earths; aluminates doped with rare earths; and orthosilicates doped with rare earths; and

said luminous substance pigments having grain sizes $\leqq 20$ μm and a mean grain diameter $d_{50} \leqq 5$ μm and converting a portion of the radiation originating from said semiconductor component into radiation of a higher wavelength, such that the semiconductor component emits mixed radiation including the higher-wavelength radiation and radiation from the first spectral range.

13. The light-emitting semiconductor component according to claim 12, wherein said casting composition encloses at least a part of said semiconductor body.

14. The light-emitting semiconductor component according to claim 12, wherein said semiconductor body is adapted to emit radiation in a blue spectral range having a maximum luminescence intensity at λ=430 nm or at λ=450 nm.

15. The light-emitting semiconductor component according to claim 12, which further comprises an opaque base housing having a recess formed therein, said semiconductor body being disposed in said recess and said recess being at least partially filled with said casting composition.

16. The light-emitting semiconductor component according to claim 12, wherein said pigment powder comprises of at least two luminous substance pigments, where at least one is selected from the luminous substances group of claim 12.

17. The light-emitting semiconductor component according to claim 12, wherein said semiconductor body is a blue light emitting semiconductor body, and said luminous substance pigments are Ce-doped phosphors adapted to shift some of the blue light emitted by said semiconductor body into a yellow spectral range, whereby the semiconductor component emits white light.

18. The light-emitting semiconductor component according to claim 12, wherein said semiconductor body is a blue light emitting semiconductor body, and said luminous substance pigments shift some of the blue light emitted by said semiconductor body into a green and red spectral range, whereby the semiconductor component emits white light.

19. The light-emitting semiconductor component according to claim 12, wherein the mean grain diameter d_{50} of said luminous substance pigments is between one and two micrometers.

20. The light-emitting semiconductor component according to claim 12, which comprises light-scattering particles added to said casting resin.

21. The light-emitting semiconductor according to claim 12, wherein said luminous substances pigment powder is a tempered pigment powder.

* * * * *

E

US006812500B2

(12) **United States Patent**
Reeh et al.

(10) **Patent No.: US 6,812,500 B2**
(45) **Date of Patent: Nov. 2, 2004**

(54) **LIGHT-RADIATING SEMICONDUCTOR COMPONENT WITH A LUMINESCENCE CONVERSION ELEMENT**

(75) Inventors: **Ulrike Reeh**, Munich (DE); **Klaus Höhn**, Taufkirchen (DE); **Norbert Stath**, Regensburg (DE); **Günter Waitl**, Regensburg (DE); **Peter Schlotter**, Freiburg (DE); **Jürgen Schneider**, Kirchzarten (DE); **Ralf Schmidt**, Vörstetten (DE)

(73) Assignee: **Osram Opto Semiconductors GmbH & Co. oHG.** (DE)

(*) Notice: Subject to any disclaimer, the term of this patent is extended or adjusted under 35 U.S.C. 154(b) by 225 days.

(21) Appl. No.: **09/731,220**

(22) Filed: **Dec. 6, 2000**

(65) **Prior Publication Data**

US 2001/0000622 A1 May 3, 2001

Related U.S. Application Data

(62) Division of application No. 09/221,789, filed on Dec. 28, 1998, which is a continuation of application No. PCT/DE97/01337, filed on Jun. 26, 1997.

(30) **Foreign Application Priority Data**

Jun. 26, 1996 (DE) 196 25 622
Sep. 20, 1996 (DE) 196 38 667

(51) **Int. Cl.**[7] **H01L 33/00**; H05B 33/00
(52) **U.S. Cl.** **257/98**; 257/99; 257/100; 257/103
(58) **Field of Search** 257/98, 99, 100, 257/103

(56) **References Cited**

U.S. PATENT DOCUMENTS

2,096,693	A	10/1937	Cox	313/485
2,192,869	A	3/1940	Pearce	313/485
3,510,732	A *	5/1970	Amans	257/77
3,593,055	A	7/1971	Geusie	257/98
3,602,758	A	8/1971	Thornton	313/485
3,669,478	A	6/1972	Pinnow et al.	
3,691,482	A	9/1972	Pinnow et al.	
3,699,478	A	10/1972	Pinnow et al.	332/7.51
3,819,974	A	6/1974	Stevenson et al.	

(List continued on next page.)

FOREIGN PATENT DOCUMENTS

DE	2 347 289	4/1974
DE	33 15 675 A1	11/1983
DE	38 04 293 A1	8/1989
DE	90 13 615	1/1991
EP	0 486 052 A1	5/1992

(List continued on next page.)

OTHER PUBLICATIONS

Japanese Internet Literature, "Preparing Nearly–Spherical Aluminate Phosphors of Uniform Size".

(List continued on next page.)

Primary Examiner—Jerome Jackson
(74) *Attorney, Agent, or Firm*—Fish & Richardson P.C.

(57) **ABSTRACT**

The light-radiating semiconductor component has a radiation-emitting semiconductor body and a luminescence conversion element. The semiconductor body emits radiation in the ultraviolet, blue and/or green spectral region and the luminescence conversion element converts a portion of the radiation into radiation of a longer wavelength. This makes it possible to produce light-emitting diodes which radiate polychromatic light, in particular white light, with only a single light-emitting semiconductor body. A particularly preferred luminescence conversion dye is YAG:Ce.

69 Claims, 6 Drawing Sheets

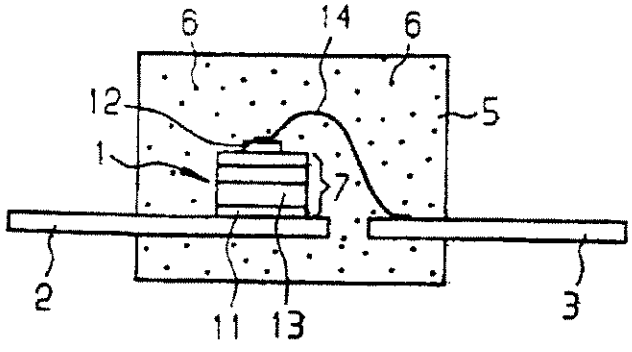

U.S. PATENT DOCUMENTS

3,875,456	A	*	4/1975	Kano et al.	313/501
3,932,881	A		1/1976	Mita	257/98
4,298,820	A		11/1981	Bongers et al.	313/463
4,479,886	A		10/1984	Kasenga	252/301.4
4,727,283	A		2/1988	van Kemenade et al.	313/487
4,780,752	A		10/1988	Angerstein et al.	357/72
5,019,746	A		5/1991	Merg	
5,107,317	A		4/1992	Takasaki	357/30
5,126,214	A		6/1992	Tokailin et al.	313/503
5,202,777	A		4/1993	Sluzky et al.	357/50
5,535,230	A		7/1996	Abe	257/98
5,798,537	A		8/1998	Nitta	257/103
5,847,507	A		12/1998	Butterworth et al.	313/512
5,959,316	A		9/1999	Lowery	257/98
5,998,925	A		12/1999	Shimizu et al.	
6,069,440	A		5/2000	Shimizu et al.	313/486

FOREIGN PATENT DOCUMENTS

EP	97 933 047.9	7/1997	
JP	46-7462	12/1971	
JP	47-017684	9/1972	
JP	48-6962	3/1973	
JP	46-39866	6/1973	
JP	49-1221	1/1974	
JP	50-43913	4/1975	15/5
JP	50-74875	6/1975	
JP	52/40959	10/1977	
JP	55-4898	1/1980	
JP	56-005884	1/1981	
JP	62-20237	1/1987	
JP	2-91980	9/1988	
JP	01-179471	7/1989	
JP	5-152609	6/1993	
JP	6-69546	3/1994	
JP	7-99345	4/1995	
JP	7-42152	7/1995	
JP	7-176794	7/1995	
JP	7-193281	7/1995	
JP	07-292354	7/1995	
JP	08-007614	1/1996	
JP	08-096958	4/1996	
JP	198585/1996	7/1996	
JP	244339/1996	9/1996	
JP	245381/1996	9/1996	
JP	359004/1996	12/1996	
JP	09-028642	2/1997	
JP	9-73807	3/1997	
JP	081010/1997	3/1997	
JP	02-927279	7/1999	
JP	11-220174	8/1999	

OTHER PUBLICATIONS

Course of Lectures: Fundamental and Application of Color Image Engineering, No. 5, Television Gakkaishi (The Journal of the Institute of Television Engineers of Japan), vol. 47, 1993, p. 753–764.

R.W.G. HunT, "Revised Colour–Appearance Model for Related and Unrelated Colours", Color Research and Application, vol. 14, 1991 p. 146–165.

Yoshinobu Nayatani, "Revision of the Chroma and Hue Scaled of a Nonlinear Color–Appearance Model", Color Research and Application, vol. 20, 1995, p. 143–155.

Mitsuo Ikeda et al. "Equivalent Lightness of Colored Objects at Illuminances from the Scotopic to the Photoptic Level", Color Research and Application, vol. 14, 1989, p. 198–206.

Mitsuo Ikeda et al., "Equivalent Lightness of Colored Objects of Equal Munsell Chroma and of Equal Munsell Value at Various Illuminances", Color Research and Application, Vol. 16, 1991, p. 72–80.

Hiroyuki Shinoda et al., "Categorized Color Space on CRT in the Aperture and the Surface Color Mode", Color Research and Application, Vol. 18, 1993, pp. 326–333.

Change of Color Conspicuity for Various Illuminance Levels Effects of the Purkuinje shift, Shormei Gakkaishi (Journal of the Illuminating Engineering Institute of Japan, vol. 17, 1987, pp. 612–617.

Japanese Journal of Applied Physics, Part 2, Vol. 31, No. 10B, 1992, pp. L1457–L1459.

Philips Journal of Research, Vol. 36, No. 1, 1981, pp. 15–30.

Translation of JP 48–39866, May 18, 1973, Japan.

Translation of JP 6–0009, Aug. 19, 1994, Japan.

Translation of JP 5–50611, Jul. 2, 1993, Japan.

Translation of JP 5–72553, Oct. 1993, Japan.

B.M. J. Smets, "Phosphors Based on Rare–Earths, A New Era in Fluorescent Lighting", Materials Chemistry and Physics, 16 (1987), pp. 283–299.

Chao et al., *Jour Solid State Chemistry,* "White Light Emitting Glass", pp. 17–29.

D.J. Robbins, "The Effect of Crystal Field and Temperature on the Photoluminescence Excitation of Ce^{3+} In YAG", J. Electrochem. Soc.; Solid State Science and Technology, Sep. 1979, Vol. 126, No. 9, pp. 1550–1555.

Frank Möllmer et al., "Siemens SMT–TOPLED für die Oberflächenmontage", [Siemens SMT–TOPLEDS for surface mounting], Siemens Components 29, 1991, No. 4, pp. 147–149.

G. Blasse et al., "A New Phosphor For Flying–Spot Ray Tubes For Color Television; Yellow–Emitting $Y_3Al_5O_{12}Ce^{3+}$", Applied Physics Letter, Vol. 11, No. 2, Jul. 15, 1967, pp. 53, 54.

German Utility Model G 90 13 615.2., dated Jan. 24, 1991, electroluminescent or laser diode.

Glen A. Slack et al., "Optical Absorption of $Y_3Al_5O_{12}$ from **10**–to **55000**–cm^{-1} Wave Numbers", Physical review, Vol. 177, No. 3, Jan. 15, 1969, pp. 1308–1314.

Japanese Patent Abstract 07176794 A (Yoshinori), dated Jul. 14, 1995.

Japanese Patent Abstract 08007614 (Yoshinori), dated Jan. 12, 1996.

Japanese Patent Abstract No. 5–152609 (Tdatatsu), dated Jun. 18, 1993.

Mary V. Hoffman, "Improved color rendition in high pressure mercury vapor lamps", Journal of IES, January 1977, pp. 89–91.

S.N. Mohammad et al., "Emerging Gallium Nitride Based Devices", Proceedings of the IEEE, Vol. 83, No. 10, Oct. 1995, pp. 1306–1355.

Sato et al., "Full–Color . . . Diode", Jpn. J. Appl. Phys., Vol. 24 (1996), pp. L838–L839, 7/96.

Shuji Nakamura et al., "The blue laser diode, GaN based light emitters and lasers", Springer Verlag, Berlin, 1997, 99. 216–219, 328.

Siemens Forsch.–u. Entwick1.–Ber Bd 5 (1977) No. 3, p. 162 [Siemens research and development reports, vol., 6]

Thomas Jüstel et al., "Neue Entwickungen auf dm Gebiet lumineszierender Materialien für Beleuchtungs–und Displayanwendungen" [new developments in the field of luminescent material for lighting and display applications], Angew. Chem., 1998, 110, pp. 3250–3271.

White LED Lamp by Nichia, copy of a Japanese Newspaper, dated Sep. 1996.
English Translation of Japanese 01175103 A, Jul. 11, 1989.
English Translation of Japanese 01260707 A, Oct. 18, 1989.
Phosphor Handbook, English Translation of (BAT).
"Phosphr Handbook", Ohm 1987, pp. 172–174, 188–189, 270, 275–276, 383–385.
Nakamura, Shuji et al., Candela–class high–brightness InGan/AlGaN double–heterostructure blue–light–emitting diodes, App. Phys. Lett **64** (13) Mar. 28, 1994, pp. 1687–1689.
Nakamuri, T. "Nichia Chemical starts the sample shipment of white light Emitting Diode", Nikkei Electronics, Sep. 23, 1996 (No. 671), pp. 15–16.
English translation of (BAV).
Schlotter, P. et al., "Luminescence conversion of blue light emitting diodes", Applied Physics A, Springer Verlag (publ.), Apr 1997, vol. 4, pp. 417–418.
Material Safety Data Sheet, pp. 1 and 2, and Lamp Phosphor Data Sheet of Phosphor NP–204 of Nichia Corporation.
"Phosphor and Emitter", Osram GmbH, Jun. 1997.
Proceedings of 264th Institute of Phosphor Society, "Development and Application of high bright white LED Lamps", Nov. 29, 1996, pp. 5–14.
English Translation of (BAAA).
English Translation of Japanese Patent Application No. 245381, Filed Sep. 18, 1996, Nichia Chemical Industries Ltd.
English Translation of Japanese Patent Application No. 359004, Filed Dec. 27, 1996, Nichia Chemical Industries Ltd.
English Translation of Japanese Patent Application No. 198585, Filed Jul. 29, 1996, Nichia Chemical Industries Ltd.
English Translation of Japanese Patent Application No. 018010, Filed Mar. 31, 1997, Nichia Chemical Industries Ltd.
Nikkei Sangyo Shimbun (Nikkei Industrial Newspaper), Sep. 13, 1996.
English Abstract of Japanese 7–99345, Apr. 11, 1995.
Exerpt from Nikkei Snagyo Shimbun; Sep. 13, 1996.
Translation of "AP".
Journal of the Electrochemical Society, Solid–State Science and Technology, "Preparation of $Y_3Al_5O_{12}$ Based Phosphor Powders", Feb. 1987, pp. 493–498.
Chao et al., "White Light Emitting Glass", Jour. Solid State Chemistry, p. 17–29.
Nakamura, SPIE, "Present performance of InGaN based blue/green/yellow LEDS", vol. 3002, 1997, pp. 26–35.
A Dictionary of Metallurgy, p. 9, 1958.

* cited by examiner

FIG 1

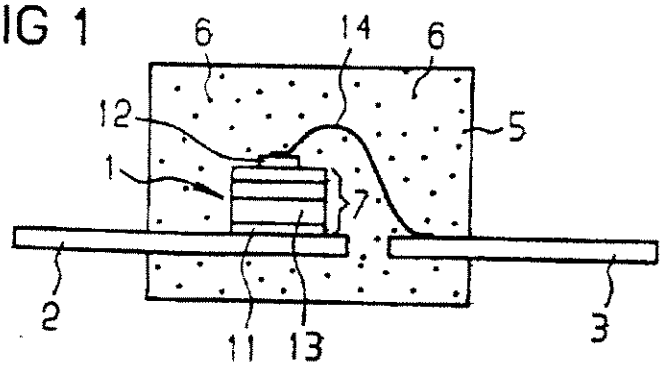

FIG 2

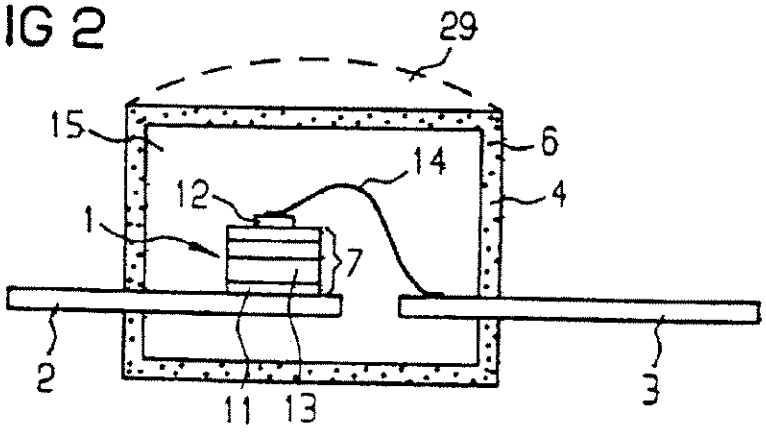

FIG 3

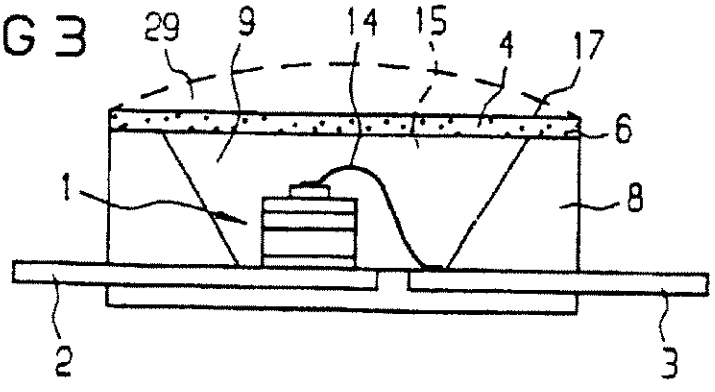

FIG 4

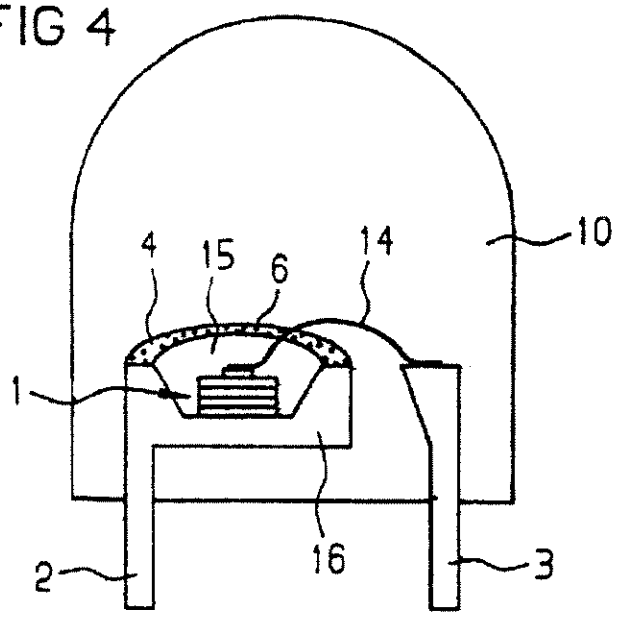

FIG 5

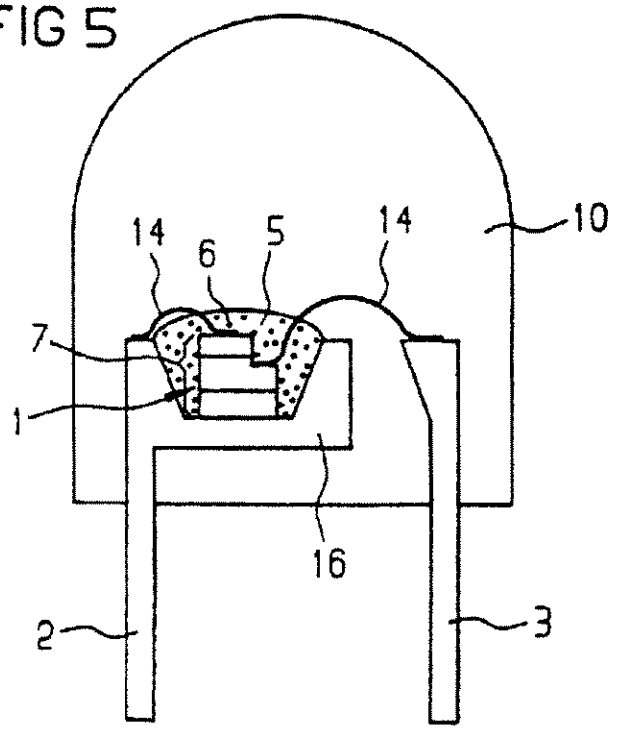

FIG 6

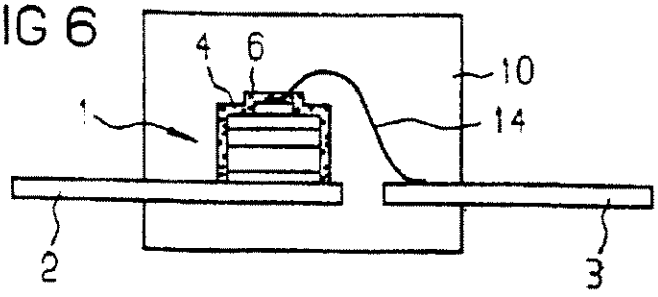

FIG 9

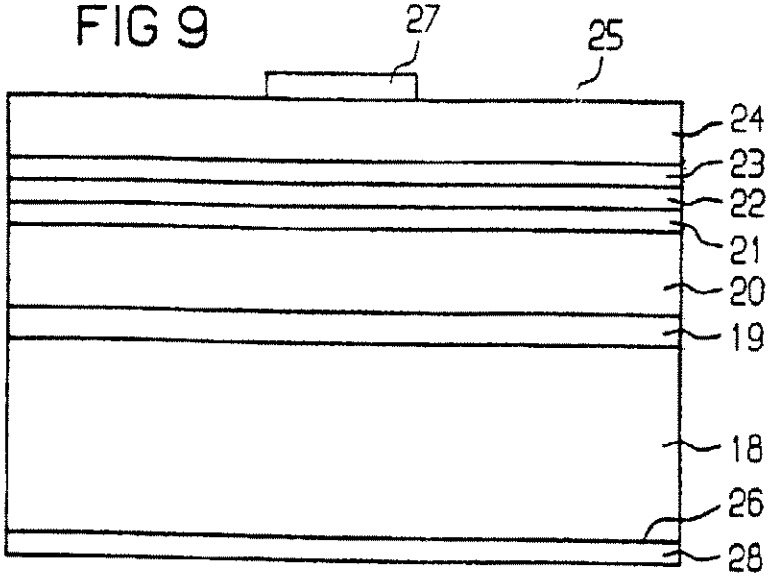

FIG 10

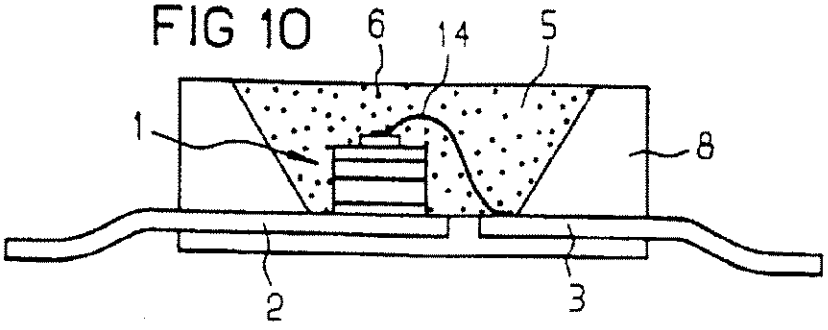

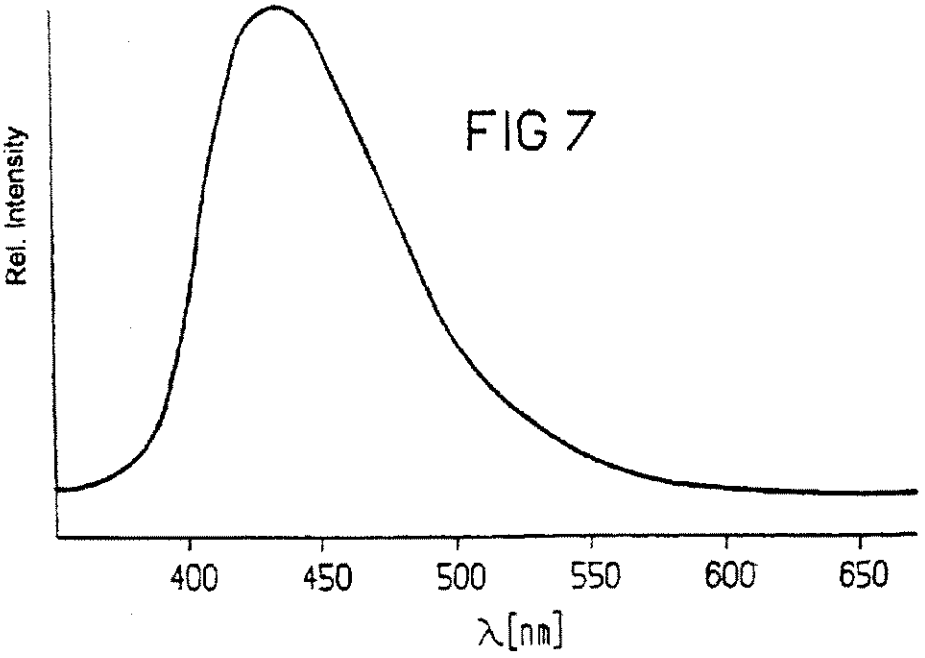
Rel. Intensity
400
450
500
550
600
650
λ[nm]

FIG 7

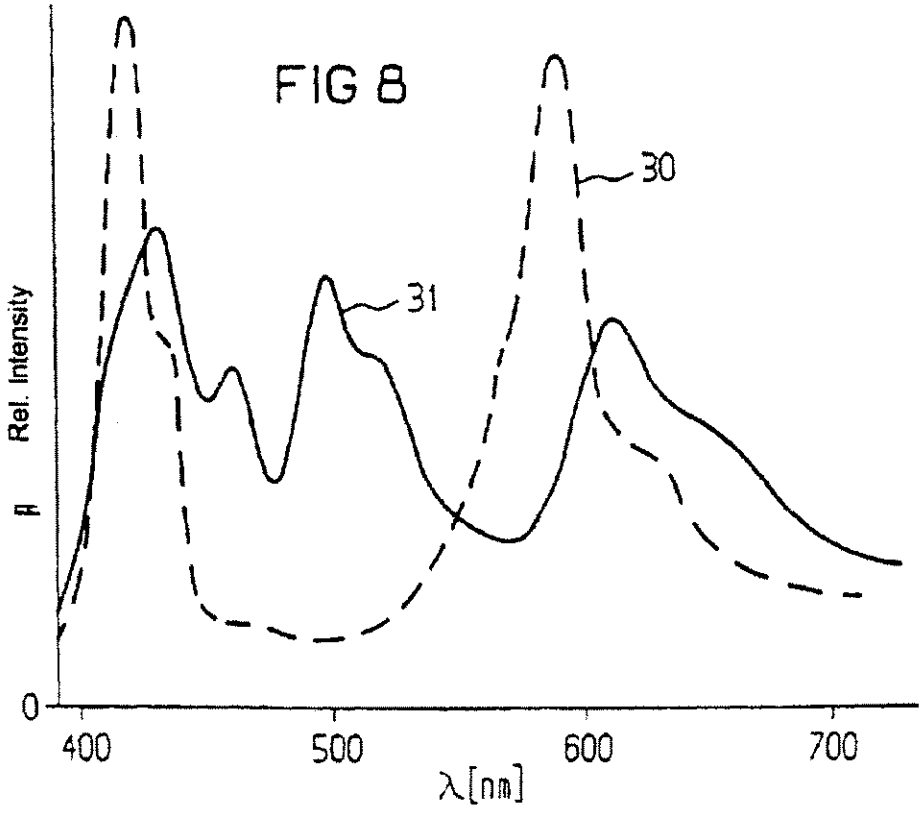
Rel. Intensity
1
0
400
500
600
700
λ[nm]
30
31

FIG 8

FIG 11

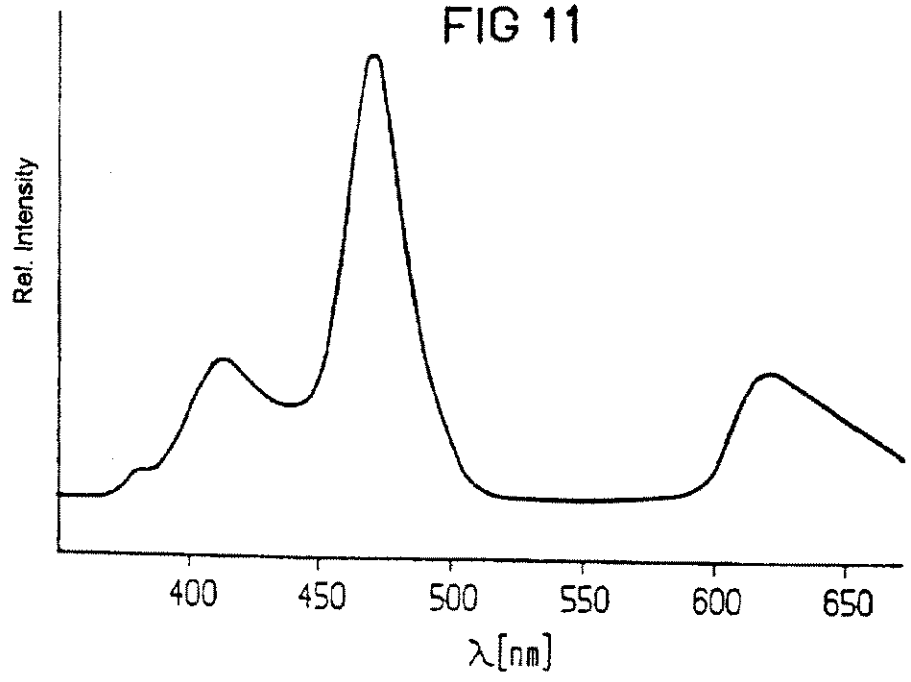
Rel. Intensity
400
450
500
550
600
650
λ[nm]

FIG 12

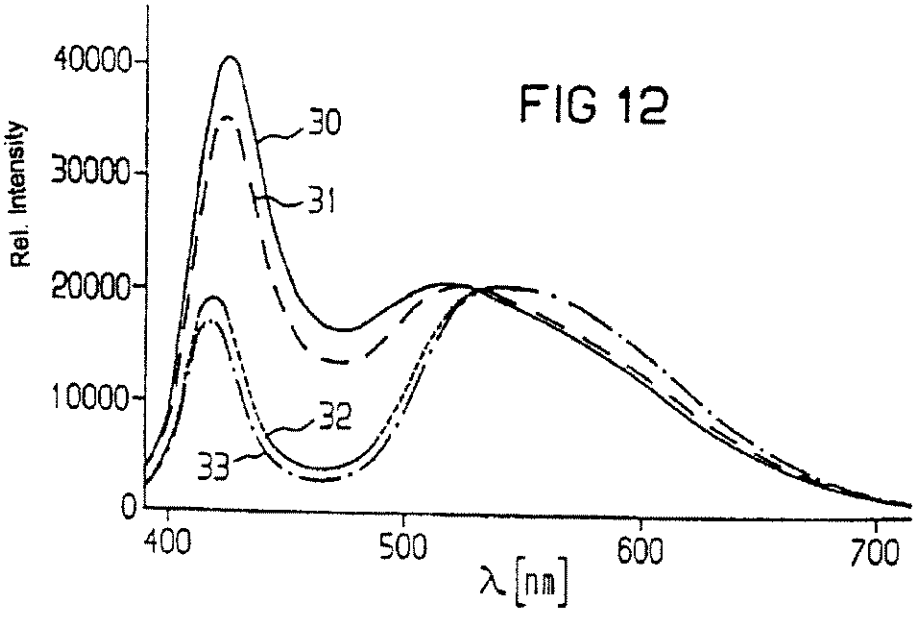
Rel. Intensity
40000
30000
20000
10000
0
30
31
32
33
400
500
600
700
λ[nm]

FIG 13

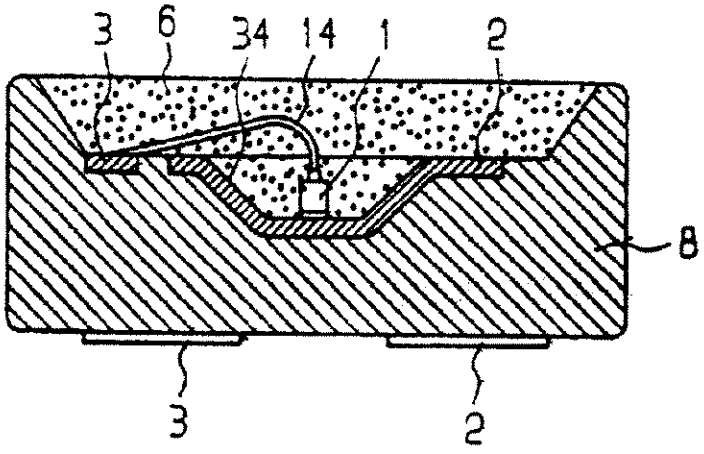

FIG 14

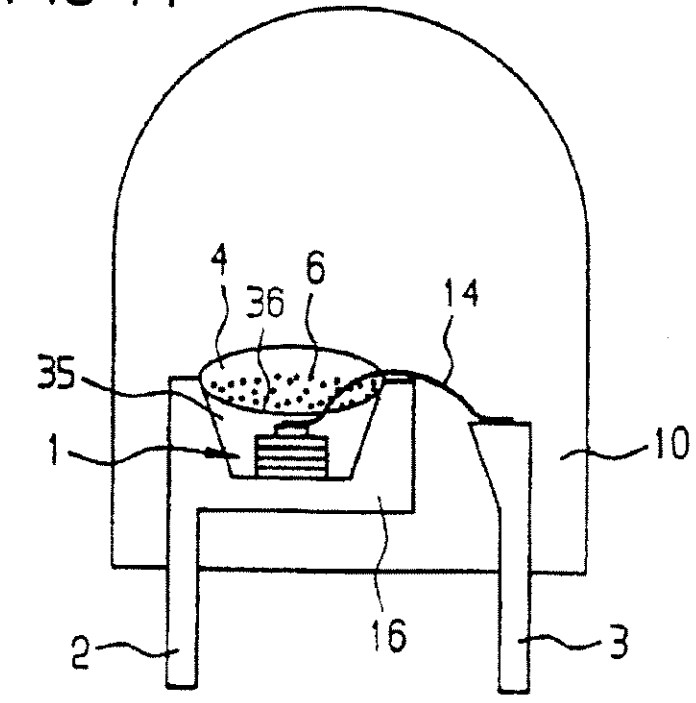

LIGHT-RADIATING SEMICONDUCTOR COMPONENT WITH A LUMINESCENCE CONVERSION ELEMENT

CROSS-REFERENCE TO RELATED APPLICATION

This is a divisional of U.S. application Ser. No. 09/221,789, filed Dec. 28, 1998, which is a continuation of copending International Application PCT/DE97/01337, filed Jun. 26, 1997, which designated the United States.

BACKGROUND OF THE INVENTION

Field of the Invention

The invention relates to a light-radiating semiconductor component with a semiconductor body that emits electromagnetic radiation during operation of the semiconductor component. The component has at least one first and at least one second electrical terminal, which are electrically connected to the semiconductor body. The component further has a luminescence conversion element with at least one luminescent material.

A semiconductor component of that type is disclosed, for example, in German published patent application DE 38 04 293. There, an arrangement having an electroluminescent or laser diode in which the entire emission spectrum radiated by the diode is shifted toward greater wavelengths by means of a plastic element that is treated with a fluorescent, light-converting organic dye. The light radiated by the arrangement consequently has a different color from the light emitted by the light-emitting diode. Depending on the nature of the dye added to the plastic, light-emitting diode arrangements which emit light in different colors can be produced using one and the same type of light-emitting diode.

German published patent application DE 23 47 289 discloses an infrared (IR) solid-state lamp in which luminescent material is applied on the edge of an IR diode and converts the IR radiation that is radiated there into visible light. The aim of this measure is, for supervisory purposes, to convert a smallest possible part of the IR radiation emitted by the diode into visible light in conjunction with the smallest possible reduction of the intensity of the emitted IR radiation.

Furthermore, European patent application EP 486 052 discloses a light-emitting diode in which at least one semiconductor photoluminescent layer is arranged between the substrate and an active electroluminescent layer. The semiconductor photoluminescent layer converts the light of a first wavelength range—the light emitted by the active layer in the direction of the substrate—into light of a second wavelength range, with the result that, altogether, the light-emitting diode emits light of different wavelength ranges.

In many potential areas of application for light-emitting diodes, such as, for example, in display elements in motor vehicle dashboards, lighting in aircraft and automobiles, and in full-color LED displays, there is increasingly a demand for light-emitting diode arrangements with which polychromatic light, in particular white light, can be produced.

Japanese patent application JP-07 176 794-A describes a white-light-emitting, planar light source in which two blue-light-emitting diodes are arranged at an end of a transparent plate. The diodes emit light into the transparent plate. The transparent plate is coated with a fluorescent substance on one of the two mutually opposite main surfaces. The fluorescent substance emits light when it is excited by the blue light of the diodes. The light emitted by the fluorescent substance has a different wavelength from that of the blue light emitted by the diodes. In that prior art component, it is particularly difficult to apply the fluorescent substance in such a manner that the light source radiates homogeneous white light. Furthermore, the question of reproducibility in mass production also poses major problems because even slight fluctuations in the thickness of the fluorescent layer, for example on account of unevenness of the surface of the transparent plate, cause a change in the shade of white of the radiated light.

SUMMARY OF THE INVENTION

It is accordingly an object of the invention to provide a light-radiating semiconductor component, which overcomes the above-mentioned disadvantages of the heretofore-known devices and methods of this general type and which radiates homogeneous polychromatic light and ensures technically simple mass production with component characteristics that are reproducible to the greatest possible extent.

With the foregoing and other objects in view there is provided, in accordance with the invention, a light-radiating semiconductor component, comprising:

- a semiconductor body emitting electromagnetic radiation during an operation of the semiconductor component, the semiconductor body having a semiconductor layer sequence suitable for emitting electromagnetic radiation of a first wavelength range selected from a spectral region consisting of ultraviolet, blue, and green;
- a first electrical terminal and a second electrical terminal each electrically conductively connected to the semiconductor body; and
- a luminescence conversion element with at least one luminescent material, the luminescence conversion element converting a radiation originating in the first wavelength range into radiation of a second wavelength range different from the first wavelength range, such that the semiconductor component emits polychromatic radiation comprising radiation of the first wavelength range and radiation of the second wavelength range.

The invention provides for the radiation-emitting semiconductor body to have a layer sequence, in particular a layer sequence with an active semiconductor layer made of $Ga_xIn_{1-x}N$ or $Ga_xAl_{1-x}N$, which emits an electromagnetic radiation of a first wavelength range from the ultraviolet, blue and/or green spectral region during operation of the semiconductor component. The luminescence conversion element converts part of the radiation originating from the first wavelength range into radiation of a second wavelength range, in such a way that the semiconductor component emits polychromatic radiation, in particular polychromatic light, comprising radiation of the first wavelength range and radiation of the second wavelength range. This means, for example, that the luminescence conversion element spectrally selectively absorbs part of the radiation emitted by the semiconductor body, preferably only over a spectral subregion of the first wavelength range, and emits it in the region of longer wavelength (in the second wavelength range). Preferably, the radiation emitted by the semiconductor body has a relative intensity maximum at a wavelength $\lambda \leqq 520$ nm and the wavelength range which is spectrally selectively absorbed by the luminescence conversion element lies outside this intensity maximum.

In accordance with an added feature of the invention, the luminescence conversion element converts radiation of the

first wavelength range into radiation of a plurality of second wavelength ranges from mutually different spectral subregions, such that the semiconductor component emits polychromatic radiation comprising radiation of the first wavelength range and radiation of the plurality of second wavelength ranges. In other words, the invention advantageously makes it possible also to convert a number (one or more) of first spectral subregions originating from the first wavelength range into a plurality of second wavelength ranges. As a result, it is possible to produce diverse color mixtures and color temperatures.

The semiconductor component according to the invention has the particular advantage that the wavelength spectrum generated by way of luminescence conversion and hence the color of the radiated light do not depend on the level of the operating current intensity through the semiconductor body. This has great significance particularly when the ambient temperature of the semiconductor component and, consequently, as is known, also the operating current intensity greatly fluctuate. Especially light-emitting diodes having a semiconductor body based on GaN are very sensitive in this respect.

In addition, the semiconductor component according to the invention requires only a single driving voltage and, as a result, also only a single driving circuit configuration, whereby the outlay on devices for the driving circuit of the semiconductor component can be kept very low.

In accordance with an additional feature of the invention, the semiconductor component has a defined main radiating direction, and the luminescence conversion element is disposed substantially downstream of the semiconductor body in the main radiating direction of the semiconductor component.

In accordance with another feature of the invention, the luminescence conversion element is at least one luminescence conversion layer disposed in a vicinity of the semiconductor body. In this particularly preferred embodiment of the invention, a partially transparent luminescence conversion layer, that is to say one which is partially transparent to the radiation emitted by the radiation-emitting semiconductor body, is provided as the luminescence conversion element above or on the semiconductor body. In order to ensure a uniform color of the radiated light, the luminescence conversion layer is advantageously designed in such a way that it has a constant thickness throughout. This has the particular advantage that the path length of the light radiated by the semiconductor body through the luminescence conversion layer is virtually constant for all radiation directions. The effect that can be achieved as a result of this is that the semiconductor component radiates light of the same color in all directions. A further particular advantage of a semiconductor component according to the invention in accordance with this development consists in the fact that a high degree of reproducibility can be obtained in a simple manner, which is of considerable significance for efficient mass production. A resist or resin layer treated with luminescent material may be provided, for example, as the luminescence conversion layer.

In accordance with a further feature of the invention, the luminescence conversion element is a luminescence conversion encapsulation enclosing at least a part of the semiconductor body and partial regions of the first and second electrical terminals. The encapsulation is partially transparent and encloses at least part of the semiconductor body (and possibly partial regions of the electrical terminals) and can simultaneously be utilized as component encapsulation (housing). The advantage of a semiconductor component in accordance with this embodiment consists essentially in the fact that conventional production lines used for the production of conventional light-emitting diodes (for example radial light-emitting diodes) can be utilized for its production. The material of the luminescence conversion encapsulation is used for the component encapsulation instead of the transparent plastic which is used for this purpose in conventional light-emitting diodes.

In further advantageous embodiments of the semiconductor component according to the invention and of the two preferred embodiments mentioned above, the luminescence conversion layer or the luminescence conversion encapsulation is composed of a transparent material, for example plastic, preferably epoxy resin, which is provided with at least one luminescent material (examples of preferred plastics and luminescent materials will be found further below). In this way, it is possible to produce luminescence conversion elements in a particularly cost-effective manner. Specifically, the requisite process steps can be integrated in conventional production lines for light-emitting diodes with no major outlay.

In accordance with again an added feature of the invention, the second wavelength range includes wavelengths at least some of which are longer than wavelengths of the first wavelength range.

In accordance with again an additional feature of the invention, the semiconductor body is adapted to emit ultraviolet radiation during operation of the semiconductor component, and the luminescence conversion element converts at least a portion of the ultraviolet radiation into visible light.

In accordance with again another feature of the invention, the first wavelength range and the second wavelength range of the polychromatic radiation lie at least partially in mutually complementary-color spectral regions, and a combination of radiation from the first and second wavelength range results in white light.

When the second spectral subregion of the first wavelength range and a second wavelength range are complementary to one another, it is possible to produce polychromatic, in particular white, light from a single colored light source, in particular a light-emitting diode having a single blue-light-radiating semiconductor body. In order, for example, to produce white light with a blue-light-emitting semiconductor body, part of the radiation from the blue spectral region emitted by the semiconductor body is converted into the yellow spectral region, which is complementarily colored with respect to blue. The color temperature or color locus of the white light can in this case be varied by a suitable choice of the luminescence conversion element, in particular by a suitable choice of the luminescent material, its particle size and its concentration. Furthermore, these arrangements also advantageously afford the possibility of using luminescent material mixtures, as a result of which, advantageously, the desired hue can be set very accurately. Likewise, it is possible to configure luminescence conversion elements inhomogeneously, for example by means of inhomogeneous luminescent material distribution. Different path lengths of the light through the luminescence conversion element can advantageously be compensated for as a result of this.

In accordance with again a further feature of the invention, the first wavelength range emitted by the semiconductor body and two second wavelength ranges produce an additive color triad, such that white light is radiated by the semiconductor component during operation thereof.

In a further preferred embodiment of the semiconductor component according to the invention, the luminescence

conversion element or another constituent of a component encapsulation has, for the purpose of color matching, one or more dyes which do not effect wavelength conversion. For this purpose, it is possible to use the dyes which are used for the production of conventional light-emitting diodes, such as, for example, azo, anthraquinone or perinone dyes.

In order to protect the luminescence conversion element against an excessively high radiation load, in an advantageous development or in the above-mentioned preferred embodiments of the semiconductor component according to the invention, at least part of the surface of the semiconductor body is surrounded by a first, transparent casing composed, for example, of a plastic, on which casing the luminescence conversion layer is applied. This reduces the radiation density in the luminescence conversion element and, consequently, the radiation load thereof, which, depending on the materials used, has a positive effect on the life of the luminescence conversion element.

In accordance with yet an added feature of the invention, the radiation emitted by the semiconductor body has a luminescence intensity maximum in a blue spectral region at a wavelength selected from the group consisting of λ=430 nm and λ=450 nm. The preferred radiation-emitting semiconductor body has a radiation spectrum with an intensity maximum at a wavelength of between 420 nm and 460 nm, in particular at 430 nm (for example semiconductor body based on $Ga_xAl_{1-x}N$) or 450 nm (for example semiconductor body based on $Ga_xIn_{1-x}N$). It is advantageous that virtually all colors and mixed colors of the C.I.E. chromaticity diagram can be produced by such a semiconductor component according to the invention. In this case, as specified above, the radiation-emitting semiconductor body may essentially be composed of electroluminescent semiconductor material, but also of a different electroluminescent material, such as polymer material, for example.

In accordance with yet an additional feature of the invention, an opaque base housing is formed with a recess, and wherein the semiconductor body is disposed in the recess of the base housing, and including a covering layer having a luminescence conversion layer on the recess. Alternatively, the recess is at least partially filled with the luminescence conversion element.

In accordance with yet another feature of the invention, the luminescence conversion element comprises a plurality of layers with mutually different wavelength conversion properties.

In accordance with yet a further feature of the invention, the luminescence conversion element includes organic dye molecules in a plastic matrix, such as in a matrix of silicone, thermoplastic material, or thermosetting plastic material. The luminescence conversion element may also have organic dye molecules in an epoxy resin matrix or a polymethyl methacrylate matrix.

In accordance with yet again an added feature of the invention, the luminescence conversion element has at least one inorganic luminescence material selected from the group of phosphors. The inorganic luminescent material is preferably from the group of Ce-doped garnets, such as YAG:Ce.

In accordance with yet again an additional feature of the invention, the inorganic luminescent material is embedded in an epoxy resin matrix. It may also be embedded in a matrix formed of inorganic glass with a relatively low melting point.

Preferably, the inorganic luminescent material has a mean particle size of approximately 10 μm

In accordance with yet again another feature of the invention, the luminescence conversion element is provided with a plurality of mutually different materials selected from the group consisting of organic and inorganic luminescent materials. The luminescence conversion element may include organic or inorganic dye molecules partly with and partly without a wavelength conversion effect.

In accordance with yet again a further feature of the invention, the luminescence conversion element includes light-diffusing particles. The component may also have a transparent encapsulation with light-diffusing particles.

In accordance with again an added feature of the invention, the luminescence conversion element comprises at least one luminescent 4f-organometallic compound.

A blue output radiation is obtained if, in accordance with the invention, the luminescence conversion element includes a luminescent material that is luminescent in a blue region. The encapsulation may thereby be transparent with a blue luminescent material.

As noted, the luminescence conversion encapsulation or the luminescence conversion layer may be produced from a resist or from a plastic, for example from a silicone, thermoplastic or thermosetting plastic material (epoxy and acrylate resins) used for the encapsulation of optoelectronic components. Furthermore, covering elements fabricated from thermoplastic materials, for example, can be used as the luminescence conversion encapsulation. All the above-mentioned materials can be treated with one or more luminescent materials in a simple manner.

A semiconductor component according to the invention can be realized in a particularly simple manner when the semiconductor body is arranged in a recess in an optionally prefabricated housing and the recess is provided with a covering element having the luminescence conversion layer. A semiconductor component of this type can be produced in large numbers in conventional production lines. For this purpose, all that is necessary, after the mounting of the semiconductor body in the housing, is to apply the covering element, for example a resist or casting resin layer or a prefabricated covering plate made of thermoplastic material, to the housing. Optionally, the recess in the housing may be filled with a transparent material, for example a transparent plastic, which does not alter in particular the wavelength of the light emitted by the semiconductor body or, however, if desired, may already be designed such that it effects luminescence conversion.

In a development of the semiconductor component according to the invention which is particularly preferred on account of the fact that it can be realized in a particularly simple manner, the semiconductor body is arranged in a recess in a housing which is optionally prefabricated and may already be provided with a lead frame and the recess is filled with an at least partially transparent casting resin, to which the luminescent material has already been added prior to the recess being sealed by casting. In this case, the luminescence conversion element is consequently provided by the potting of the semiconductor body that is provided with luminescent material.

A particularly preferred material for the production of the luminescence conversion element is epoxy resin, to which one or more luminescent materials are added. However, it is also possible to use polymethyl methacrylate (PMMA) instead of epoxy resin.

PMMA can be treated with organic dye molecules in a simple manner. Perylene-based dye molecules, for example, can be used to produce green-, yellow- and red-light-emitting semiconductor components according to the invention. Semiconductor components which emit light in the UV, visible or infrared region can also be produced by admixture

of 4f-organometallic compounds. In particular, red-light-emitting semiconductor components according to the invention can be realized for example by admixture of Eu^{3+}-based organometallic chelates (λ=620 nm). Infrared-radiating semiconductor components according to the invention, in particular having blue-light-emitting semiconductor bodies, can be produced by admixture of 4f-chelates or of Ti^{3+}-doped sapphire.

A white-light-radiating semiconductor component according to the invention can advantageously be produced by choosing the luminescent material such that a blue radiation emitted by the semiconductor body is converted into complementary wavelength ranges, in particular blue and yellow, or to form additive color triads, for example blue, green and red. In this case, the yellow or the green and red light is produced by means of the luminescent materials. The hue (color locus in the CIE chromaticity diagram) of the white light thereby produced can in this case be varied by a suitable choice of the dye/s in respect of mixture and concentration.

Suitable organic luminescent materials for a white-light-radiating semiconductor component according to the invention are perylene luminescent materials, such as, for example, BASF Lumogen F 083 for green luminescence, BASF Lumogen F 240 for yellow luminescence and BASF Lumogen F 300 for red luminescence. These dyes can be added to transparent epoxy resin, for example, in a simple manner.

A preferred method for producing a green-light-emitting semiconductor component using a blue-light-radiating semiconductor body consists in using UO_2^{++}-substituted borosilicate glass for the luminescence conversion element.

In a further preferred development of a semiconductor component according to the invention and of the advantageous embodiments specified above, light-diffusing particles, so-called diffusors, are additionally added to the luminescence conversion element or to another radiation-transmissive component of the component encapsulation. The color perception and the radiation characteristics of the semiconductor component can advantageously be optimized by this means.

In a particularly advantageous embodiment of the semiconductor component according to the invention, the luminescence conversion element is at least partially composed of a transparent epoxy resin provided with an inorganic luminescent material. Specifically, it is advantageous that inorganic luminescent materials can be bound in epoxy resin in a simple manner. A particularly preferred inorganic luminescent material for the production of white-light-emitting semiconductor components according to the invention is the phosphor YAG:Ce ($Y_3Al_5O_{12}:Ce^{3+}$). The latter can be mixed in a particularly simple manner in transparent epoxy resins which are conventionally used in LED technology. Other conceivable luminescent materials are further garnets doped with rare earths, such as, for example, $Y_3Ga_5O_{12}:Ce^{3+}$, $Y(Al,Ga)_5O_{12}:Ce^{3+}$ and $Y(Al,Ga)_5O_{12}:Tb^{3+}$, as well as alkaline earth metal sulfides doped with rare earths, such as, for example, $SrS:Ce^{3+}$, Na, $SrS:Ce^{3+}$, Cl, $Srs:CeCl_3$, $CaS:Ce^{3+}$ and $SrSe:Ce^{3+}$.

Furthermore, the thiogallates doped with rare earths, such as, for example, $CaGa_2S_4:Ce^{3+}$ and $SrGa_2S_4:Ce^{3+}$, are particularly suitable for the purpose of producing differently polychromatic light. The use of aluminates doped with rare earths, such as, for example, $YAlO_3:Ce^{3+}$, $YGaO_3:Ce^{3+}$, $Y(Al,Ga)O_3:Ce^{3+}$, and orthosilicates $M_2SiO_5:Ce^{3+}$ (M:Sc, Y, Sc) doped with rare earths, such as, for example, $Y_2SiO_5:Ce^{3+}$, is likewise conceivable for this purpose. In all of the yttrium compounds, the yttrium can, in principle, also be replaced by scandium or lanthanum.

In a further possible embodiment of the semiconductor component according to the invention, at least all those components of the encapsulation through which light is radiated, that is to say including the luminescence conversion encapsulation or layer, are composed of purely inorganic materials. Consequently, the luminescence conversion element is composed of an inorganic luminescent material which is embedded in a thermally stable, transparent or partially transparent inorganic material. In particular, the luminescence conversion element is composed of an inorganic phosphor, which is embedded in an inorganic glass advantageously of low melting point (for example silicate glass). A preferred procedure for producing a luminescence conversion layer of this type is the sol gel technique, by means of which the entire luminescence conversion layer, that is to say both the inorganic luminescent material and the embedding material, can be produced in one work operation.

In order to improve the thorough mixing of the radiation of the first wavelength range that is emitted by the semiconductor body with the luminescence-converted radiation of the second wavelength range and hence the color homogeneity of the radiated light, in an advantageous refinement of the semiconductor component according to the invention, a dye which emits light in the blue region is additionally added to the luminescence encapsulation or the luminescence conversion layer and/or to another component of the component encapsulation, which dye attenuates a so-called directional characteristic of the radiation radiated by the semiconductor body. Directional characteristic is to be understood to mean that the radiation emitted by the semiconductor body has a preferred radiation direction.

In a preferred refinement of the semiconductor component according to the invention, the inorganic luminescent material is used in powder form for the above-mentioned purpose of thorough mixing of the emitted radiation, the luminescent material particles not dissolving in the substance (matrix) encapsulating them. In addition, the inorganic luminescent material and the substance encapsulating it have mutually different refractive indices. This advantageously leads to a portion of the light which is not absorbed by the luminescent material being scattered, in a manner dependent on the particle size of the luminescent material. The directional characteristic of the radiation radiated by the semiconductor body is thereby efficiently attenuated, with the result that the unabsorbed radiation and the luminescence-converted radiation are homogeneously mixed, which leads to a spatially homogeneous color perception.

A white-light-radiating semiconductor component according to the invention can particularly preferably be realized by admixing the inorganic luminescent material YAG:Ce ($Y_3Al_5O_{12}:Ce^{3+}$) with an epoxy resin used to produce the luminescence conversion encapsulation or layer. Part of a blue radiation emitted by the semiconductor body is shifted by the inorganic luminescent material $Y_3Al_5O_{12}:Ce^{3+}$ into the yellow spectral region and, consequently, into a wavelength range which is complementarily colored with respect to the color blue. The hue (color locus in the CIE chromaticity diagram) of the white light can in this case be varied by a suitable choice of the dye mixture and concentration.

The inorganic luminescent material YAG:Ce has, inter alia, the particular advantage that insoluble coloring pigments (particle size in the region of 10 Mm) having a refractive index of approximately 1.84 are involved in this case. Consequently, not only does the wavelength conver-

sion occur but also a scattering effect which leads to good mixing together of blue diode radiation and yellow converter radiation.

In a further preferred development of a semiconductor component according to the invention and of the advantageous embodiments specified above, light-diffusing particles, so-called diffusors, are additionally added to the luminescence conversion element or to another radiation-transmissive component of the component encapsulation. The color perception and the radiation characteristic of the semiconductor component can advantageously be further improved by this means.

It is particularly advantageous that the luminous efficiency of white-light-emitting semiconductor components according to the invention and their above-mentioned embodiments having a blue-light-emitting semiconductor body produced essentially on the basis of GaN is comparable with the luminous efficiency of an incandescent bulb. The reason for this is that, on the one hand, the external quantum efficiency of such semiconductor bodies is a few percent and, on the other hand, the luminescence efficiency of organic dye molecules is often established at more than 90%. Furthermore, the semiconductor component according to the invention is distinguished by an extremely long life, greater robustness and a smaller operating voltage in comparison with the incandescent bulb.

It is advantageous, moreover, that the luminosity of the semiconductor component according to the invention that is perceptible to the human eye can be distinctly increased by comparison with a semiconductor component which is not equipped with the luminescence conversion element but is otherwise identical, since the sensitivity of the eye increases in the direction of a higher wavelength.

Furthermore, the principle according to the invention can advantageously be used also to convert an ultraviolet radiation which is emitted by the semiconductor body in addition to the visible radiation into visible light. The luminosity of the light emitted by the semiconductor body is thereby distinctly increased.

The concept, presented here, of luminescence conversion with blue light from a semiconductor body can advantageously be extended to multistage luminescence conversion elements as well, in accordance with the scheme ultraviolet →a blue →green →yellow →red. In this case, a plurality of spectrally selectively emitting luminescence conversion elements are arranged one after the other relative to the semiconductor body.

Likewise, it is advantageously possible for a plurality of differently spectrally selectively emitting dye molecules to be jointly embedded in a transparent plastic of a luminescence conversion element. A very broad color spectrum can be produced by this means.

A particular advantage of white-light-radiating semiconductor components according to the invention in which YAG:Ce, in particular, is used as the luminescence conversion dye consists in the fact that this luminescent material, upon excitation by blue light, effects a spectral shift of approximately 100 nm between absorption and emission. This leads to a significant reduction in the reabsorption of the light emitted by the luminescent material and hence to a higher luminous efficiency. In addition, YAG:Ce advantageously has high thermal and photochemical (for example UV) stability (significantly higher than organic luminescent materials), with the result that it is even possible to produce white-light-emitting diodes for outdoor use and/or high temperature ranges.

YAG:Ce has, to date, proved to be the best-suited luminescent material in respect of reabsorption, luminous efficiency, thermal and photochemical stability and processability. However, the use of other Ce-doped phosphors is also conceivable, in particular of Ce-doped garnets.

In a particularly advantageous manner, semiconductor components according to the invention can be used, in particular on account of their low power consumption, in full-color LED displays for the lighting of motor vehicle interiors or of aircraft cabins as well as for the illumination of display devices such as motor vehicle dashboards or liquid crystal displays.

Other features which are considered as characteristic for the invention are set forth in the appended claims.

Although the invention is illustrated and described herein as embodied in a light-radiating semiconductor component having a luminescence conversion element, it is nevertheless not intended to be limited to the details shown, since various modifications and structural changes may be made therein without departing from the spirit of the invention and within the scope and range of equivalents of the claims.

The construction and method of operation of the invention, however, together with additional objects and advantages thereof will be best understood from the following description of specific embodiments when read in connection with the accompanying drawings.

BRIEF DESCRIPTION OF THE DRAWINGS

FIG. **1** is a diagrammatic sectional side view of a first exemplary embodiment of a semiconductor component according to the invention;

FIG. **2** is a diagrammatic sectional side view of a second exemplary embodiment of the semiconductor component according to the invention;

FIG. **3** is a diagrammatic sectional side view of a third exemplary embodiment of the semiconductor component according to the invention;

FIG. **4** is a diagrammatic sectional side view of a fourth exemplary embodiment of the semiconductor component according to the invention;

FIG. **5** is a diagrammatic sectional side view of a fifth exemplary embodiment of the semiconductor component according to the invention;

FIG. **6** is a diagrammatic sectional side view of a sixth exemplary embodiment of the semiconductor component according to the invention;

FIG. **7** is a graph of an emission spectrum of a blue-light-radiating semiconductor body with a layer sequence based on GaN;

FIG. **8** is a graph of the emission spectra of two semiconductor components according to the invention which radiate white light;

FIG. **9** is a diagrammatic sectional view taken through a semiconductor body which emits blue light;

FIG. **10** is a diagrammatic sectional side view of a seventh exemplary embodiment of the semiconductor component according to the invention;

FIG. **11** is a graph of an emission spectrum of a semiconductor component according to the invention which radiates polychromatic red light;

FIG. **12** is a graph of the emission spectra of further semiconductor components according to the invention which radiate white light;

FIG. **13** is a diagrammatic sectional side view of an eighth exemplary embodiment of the semiconductor component according to the invention; and

FIG. **14** is a diagrammatic sectional side view of a ninth exemplary embodiment of the semiconductor component according to the invention.

DESCRIPTION OF THE PREFERRED EMBODIMENTS

Reference will now be had to the figures of the drawing in detail, in which identical or functionally identical parts are designated by the same reference symbols throughout, and first, particularly, to FIG. **1** thereof.

The light-emitting semiconductor component illustrated in FIG. **1**, a semiconductor body **1** has a back-side contact **11**, a front-side contact **12** and a layer sequence **7**, which is composed of a number of different layers and has at least one active zone which emits a radiation (for example ultraviolet, blue or green) during the operation of the semiconductor component.

An example of a suitable layer sequence **7** for this and for all of the exemplary embodiments described below is shown in FIG. **9**. There, a layer sequence made of an AlN or GaN layer **19**, an n-conducting GaN layer **20**, an n-conducting $Ga_xAl_{1-x}N$ or $Ga_xIn_{1-x}N$ layer **21**, a further n-conducting GaN or a $Ga_xIn_{1-x}N$ layer **22**, a p-conducting $Ga_xAl_{1-x}N$ layer or $Ga_xIn_{1-x}N$ layer **23** and a p-conducting GaN layer **24** is applied on a substrate **18** composed of SiC, for example. A respective contact metallization layer **27**, **28** is applied on a main surface **25** of the p-conducting GaN layer **24** and a main surface **26** of the substrate **18**, said contact metallization layer being composed of a material which is conventionally used for electrical contacts in opto-semiconductor technology.

However, it is also possible to use any other semiconductor body deemed to be suitable by those skilled in this art for the semiconductor component according to the invention. This likewise applies to all of the exemplary embodiments described below.

In the exemplary embodiment of FIG. **1**, the semiconductor body **1** is fixed by its back-side contact **11** on a first electrical terminal **2** by means of an electrically conductive bonding agent, for example a metallic solder of an adhesive. The front-side contact **12** is connected to a second electrical terminal **3** by means of a bonding wire **14**.

The free surfaces of the semiconductor body **1** and partial regions of the electrical terminals **2** and **3** are directly enclosed by a luminescence conversion encapsulation **5**. The latter is preferably composed of a transparent plastic (preferably epoxy resin or else polymethyl methacrylate) which can be used for transparent light-emitting diode encapsulations and is treated with luminescent material **6**, preferably inorganic luminescent material, for white-light-emitting components, preferably $Y_3Al_5O_{12}:Ce^{3+}$ (YAG:Ce).

The exemplary embodiment of a semiconductor component according to the invention which is illustrated in FIG. **2** differs from that of FIG. **1** by the fact that the semiconductor body **1** and partial regions of the electrical terminals **2** and **3** are enclosed by a transparent encapsulation **15** instead of by a luminescence conversion encapsulation. This transparent encapsulation **15** does not effect any wavelength change in the radiation emitted by the semiconductor body **1** and is composed, for example, of an epoxy, silicone or acrylate resin which is conventionally used in light-emitting diode technology, or of another suitable radiation-transmissive material, such as inorganic glass, for example.

A luminescence conversion layer **4** is applied to the transparent encapsulation **15** and, as illustrated in FIG. **2**, covers the entire surface of the encapsulation **15**. It is likewise conceivable for the luminescence conversion layer **4** to cover only a partial region of this surface. The luminescence conversion layer **4** is composed, for example, once again of a transparent plastic (for example epoxy resin, resist or polymethyl methacrylate) which is treated with a luminescent material **6**. In this case, too, YAG:Ce is preferably suitable as luminescent material for a white-light-emitting semiconductor component.

This exemplary embodiment has the particular advantage that the path length through the luminescence conversion element is approximately the same size for all of the radiation emitted by the semiconductor body. This is important particularly when, as is often the case, the exact hue of the light radiated by the semiconductor component depends on this path length.

For improved output coupling of the light from the luminescence conversion layer **4** of FIG. **2**, a covering **29** (depicted by a broken line) in the form of a lens can be provided on a side surface of the component, which covering reduces total reflection of the radiation within the luminescence conversion layer **4**. This covering **29** in the form of a lens may be composed of transparent plastic or glass and be bonded, for example, onto the luminescence conversion layer **4** or be designed directly as the component part of the luminescence conversion layer **4**.

In the exemplary embodiment illustrated in FIG. **3**, the first and second electrical terminals **2**, **3** are embedded in an opaque, possibly prefabricated base housing **8** having a recess **9**. "Prefabricated" is to be understood to mean that the base housing **8** is already preconstructed on the connections **2**, **3**, for example by means of injection molding, before the semiconductor body is mounted on to the connection **2**. The base housing **8** is composed for example of an opaque plastic and the recess **9** is designed, in respect of its shape, as a reflector **17** for the radiation emitted by the semiconductor body during operation (if appropriate by suitable coating of the inner walls of the recess **9**). Such base housings **8** are used in particular in the case of light-emitting diodes which can be surface-mounted on printed circuit boards. They are applied to a lead frame having the electrical terminals **2**, **3**, for example by means of injection molding, prior to the mounting of the semiconductor bodies.

The recess **9** is covered by a luminescence conversion layer **4**, for example a separately produced covering plate **17** made of plastic which is fixed on the base housing **8**. Suitable materials for the luminescence conversion layer **4** are once again, as mentioned further above in the general part of the description, the plastics or inorganic glass in conjunction with the luminescent materials mentioned there. The recess **9** may either be filled with a transparent plastic, with an inorganic glass or with gas or else be provided with a vacuum.

As in the case of the exemplary embodiment according to FIG. **2**, a covering **29** (depicted by a broken line) in the form of a lens can be provided on the luminescence conversion layer **4** in this case as well, for improved output coupling of the light from said luminescence conversion layer, which covering reduces total reflection of the radiation within the luminescence conversion layer **4**. This covering **29** may be composed of transparent plastic and be bonded, for example, onto the luminescence conversion layer **4** or be designed integrally together with the luminescence conversion layer **4**.

In a particularly preferred embodiment, the recess **9** is filled, as shown in FIG. **10**, with an epoxy resin provided with luminescent material, that is to say with a luminescence encapsulation **5** which forms the luminescence conversion element. A covering plate **17** and/or a covering **29** in the form of a lens can then be omitted as well. Furthermore, as

illustrated in FIG. **13**, the first electrical terminal **2** is optionally designed as a reflector well **34** for example by embossing in the region of the semiconductor body **1**, which reflector well is filled with a luminescence conversion encapsulation **5**.

In FIG. **4**, a so-called radial diode is illustrated as a further exemplary embodiment. In this case, the semiconductor body **1** is fixed in a part **16**, designed as a reflector, of the first electrical terminal **2** by means of soldering or bonding, for example. Such housing designs are known in light-emitting diode technology and, therefore, need not be explained in any further detail.

In the exemplary embodiment of FIG. **4**, the semiconductor body **1** is surrounded by a transparent encapsulation **15** which, as in the case of the second exemplary embodiment mentioned (FIG. **2**), does not effect any wavelength change in the radiation emitted by the semiconductor body **1** and may be composed, for example, of a transparent epoxy resin which is conventionally used in light-emitting diode technology or of organic glass.

A luminescence conversion layer **4** is applied on this transparent encapsulation **15**. Suitable materials for this are, for example, once again, as referred to in connection with the above-mentioned exemplary embodiments, the plastics or inorganic glass in conjunction with the dyes mentioned there.

The entire structure, comprising semiconductor body **1**, partial regions of the electrical terminals **2**, **3**, transparent encapsulation **15** and luminescence conversion layer **4**, is directly enclosed by a further transparent encapsulation **10**, which does not effect any wavelength change in the radiation which has passed through the luminescence conversion layer **4**. It is composed, for example, once again of a transparent epoxy resin which is conventionally used in light-emitting diode technology or of inorganic glass.

The exemplary embodiment shown in FIG. **5** differs from that of FIG. **4** essentially by the fact that the free surfaces of the semiconductor body **1** are directly covered by a luminescence conversion encapsulation **5**, which is again surrounded by a further transparent encapsulation **10**. FIG. **5** illustrates, moreover, by way of example, a semiconductor body **1** in which, instead of the underside contacts, a further contact is provided on the semiconductor layer sequence **7**, which further contact is connected to the associated electrical terminal **2** or **3** by means of a second bonding wire **14**. It goes without saying that such semiconductor bodies **1** can also be used in all the other exemplary embodiments described herein. Conversely, of course, a semiconductor body **1** in accordance with the above-mentioned exemplary embodiments can also be used in the exemplary embodiment of FIG. **5**.

For the sake of completeness, let it be noted at this point that an integral luminescence conversion encapsulation **5**, which then replaces the combination of luminescence conversion encapsulation **5** and further transparent encapsulation **10**, can, of course, also be used in the design according to FIG. **5** in an analogous manner to the exemplary embodiment according to FIG. **1**.

In the case of the exemplary embodiment of FIG. **6**, a luminescence conversion layer **4** (possible materials as specified above) is applied directly to the semiconductor body **1**. The latter and partial regions of the electrical terminals **2**, **3** are enclosed by a further transparent encapsulation **10**, which does not effect any wavelength change in the radiation which has passed through the luminescence conversion layer **4**, and is fabricated for example from a transparent epoxy resin which can be used in light-emitting diode technology or from glass.

Such semiconductor bodies **1** provided with a luminescence conversion layer **4** and not having an encapsulation can, of course, advantageously be used in all housing designs known from light-emitting diode technology (for example SMD housings, radial housings (cf. FIG. **5**)).

In the case of the exemplary embodiment of a semiconductor component according to the invention which is illustrated in FIG. **14**, a transparent well part **35** is arranged on the semiconductor body **1** and has a well **36** above the semiconductor body **1**. The well part **35** is composed for example of transparent epoxy resin or of inorganic glass and is fabricated for example by means of injection-molding encapsulation of the electrical terminals **2**, **3** including semiconductor body **1**. Arranged in this well **36** is a luminescence conversion layer **4**, which, for example, is once again fabricated from epoxy resin or inorganic glass in which are bound particles **37**, composed of one of the above-mentioned inorganic luminescent materials. In the case of this design, it is advantageously ensured in a very simple manner that the luminescent material accumulates at unintended locations, for example next to the semiconductor body, during the production of the semiconductor component. Of course, the well part **35** can also be produced separately and be fixed in a different way, for example on a housing part, above the semiconductor body **1**.

In all of the exemplary embodiments described above, it is possible, in order to optimize the color perception of the radiated light and also in order to adapt the radiation characteristic, for the luminescence conversion element (luminescence conversion encapsulation **5** or luminescence conversion layer **4**), if appropriate the transparent encapsulation **15**, and/or if appropriate the further transparent encapsulation **10** to have light-diffusing particles, advantageously so-called diffusors. Examples of such diffusors are mineral fillers, in particular CaF_2, TiO_2, SiO_2, $CaCO_3$ or $BaSO_4$ or else organic pigments. These materials can be added in a simple manner to the above-mentioned plastics.

FIGS. **7**, **8** and **12** respectively show emission spectra of a blue-light-radiating semiconductor body (FIG. **7**) (luminescence maximum at $\lambda \approx 430$ nm) and of white-light-emitting semiconductor components according to the invention which are produced by means of such a semiconductor body (FIGS. **8** and **12**). The wavelength l in nm is plotted in each case on the abscissa and a relative electroluminescence (EL) intensity is in each case plotted on the ordinate.

Only part of the radiation emitted by the semiconductor body according to FIG. **7** is converted into a wavelength range of longer wavelength, with the result that white light is produced as mixed color. The dashed line **30** in FIG. **8** represents an emission spectrum of a semiconductor component according to the invention which emits radiation from two complementary wavelength ranges (blue and yellow) and hence white light overall. In this case, the emission spectrum has a respective maximum at wavelengths of between approximately 400 and approximately 430 nm (blue) and of between approximately 550 and approximately 580 nm (yellow). The solid line **31** represents the emission spectrum of a semiconductor component according to the invention which mixes the color white from three wavelength ranges (additive color triad formed from blue, green and red). In this case, the emission spectrum has a respective maximum for example at the wavelengths of approximately 430 nm (blue), approximately 500 nm (green) and approximately 615 nm (red).

Furthermore, FIG. **11** illustrates an emission spectrum of a semiconductor component according to the invention which radiates polychromatic light comprising blue light (maximum at a wavelength of approximately 470 nm) and red light (maximum at a wavelength of approximately 620 nm). The overall color perception of the radiated light for the human eye is magenta. The emission spectrum radiated by the semiconductor body in this case corresponds once again to that of FIG. **7**.

FIG. **12** shows a white-light-emitting semiconductor component according to the invention which is provided with a semiconductor body emitting an emission spectrum in accordance with FIG. **7** and in which YAG:Ce is used as the luminescence material. Only part of the radiation emitted by the semiconductor body in accordance with FIG. **7** is converted into a wavelength range of longer wavelength, with the result that white light is produced as the mixed color. The differently dashed lines **30** to **33** of FIG. **12** represent emission spectra of semiconductor components according to the invention in which the luminescence conversion element, in this case a luminescence conversion encapsulation made of epoxy resin, has different YAG:Ce concentrations. Each emission spectrum has a respective intensity maximum between λ=420 nm and λ=430 nm, that is to say in the blue spectral region and between λ=520 nm and λ=545 nm, that is to say in the green spectral region, the emission bands having the longer-wavelength intensity maximum largely lying in the yellow spectral region. The diagram of FIG. **12** makes it clear that in the semiconductor component according to the invention, the CIE color locus of the white light can be altered in a simple manner by alteration of the luminescent material concentration in the epoxy resin.

Furthermore, it is possible to apply inorganic luminescent materials based on Ce-doped garnets, thiogallates, alkaline earth metal sulfides and aluminates directly to the semiconductor body, without dispersing them in epoxy resin or glass.

A further particular advantage of the above-mentioned inorganic luminescent materials results from the fact that, unlike in the case of organic dyes, the luminescent material concentration e.g. in the epoxy resin is not limited by the solubility. As a result, large thicknesses of luminescence conversion elements are not necessary.

The explanation of the semiconductor component according to the invention using the exemplary embodiments described above ought not, of course, to be regarded as a restriction of the invention thereto. For example, a polymer LED emitting a corresponding radiation spectrum may also be understood as semiconductor body, such as, for example, light-emitting diode chips or laser diode chips.

We claim:

1. A light-radiating semiconductor component, comprising:

a semiconductor body emitting electromagnetic radiation during an operation of the semiconductor component, said semiconductor body having a semiconductor layer sequence suitable for emitting electromagnetic radiation of a first wavelength range selected from a spectral region consisting of ultraviolet, blue, and green;

a first electrical terminal and a second electrical terminal each electrically conductively connected to said semiconductor body;

a luminescence conversion element with at least one luminescent material, said luminescence conversion element converting a radiation originating in the first wavelength range into radiation of a second wavelength range different from the first wavelength range, such that the semiconductor component emits polychromatic radiation comprising radiation of the first wavelength range and radiation of the second wavelength range;

said luminescence conversion element comprising a luminescence conversion layer produced from a silicone and containing inorganic luminescence material selected from the group consisting of garnets doped with rare earths, alkaline earth metal sulfides doped with rare earths, thiogallates doped with rare earths, aluminates doped with rare earths, and orthosilicates doped with rare earths.

2. A light-radiating semiconductor component, comprising:

a semiconductor body emitting electromagnetic radiation during an operation of the semiconductor component, said semiconductor body having a semiconductor layer sequence suitable for emitting electromagnetic radiation of a first wavelength range selected from a spectral region consisting of ultraviolet, blue, and green;

a first electrical terminal and a second electrical terminal each electrically conductively connected to said semiconductor body;

a luminescence conversion element with at least one luminescent material, said luminescence conversion element converting a radiation originating in the first wavelength range into radiation of a second wavelength range different from the first wavelength range, such that the semiconductor component emits polychromatic radiation comprising radiation of the first wavelength range and radiation of the second wavelength range,, wherein said second wavelength range includes wavelengths at least some of which are longer than wavelengths of said first wavelength range, and said luminescence conversion element comprises a plurality of layers with mutually different wavelength conversion properties.

3. A light-radiating semiconductor component, comprising:

a semiconductor body emitting electromagnetic radiation during an operation of the semiconductor component, said semiconductor body having a semiconductor layer sequence suitable for emitting electromagnetic radiation of a first wavelength range selected from a spectral region consisting of ultraviolet, blue, and green;

a first electrical terminal and a second electrical terminal each electrically conductively connected to said semiconductor body;

a luminescence conversion element with at least one luminescent material, said luminescence conversion element converting a radiation originating in the first wavelength range into radiation of a second wavelength range different from the first wavelength range, such that the semiconductor component emits polychromatic radiation comprising radiation of the first wavelength range and radiation of the second wavelength range,, wherein said luminescence conversion element is selected from the group consisting of at least one luminescence conversion layer disposed in a vicinity of said semiconductor body and a luminescent conversion encapsulation enclosing at least a part of said semiconductor body and partial regions of said first and second electrical terminals, and wherein said luminescence conversion element includes light-diffusing particles.

4. A light-radiating semiconductor component, comprising:

a semiconductor body emitting electromagnetic radiation during an operation of the semiconductor component, said semiconductor body having a semiconductor layer sequence suitable for emitting electromagnetic radiation of a first wavelength range selected from a spectral region consisting of ultraviolet, blue, and green;

a first electrical terminal and a second electrical terminal each electrically conductively connected to said semiconductor body;

a luminescence conversion element with at least one luminescent material, said luminescence conversion element converting a radiation originating in the first wavelength range into radiation of a second wavelength range different from the first wavelength range, such that the semiconductor component emits polychromatic radiation comprising radiation of the first wavelength range and radiation of the second wavelength range,, wherein said luminescence conversion element is selected from the group consisting of at least one luminescence conversion layer disposed in a vicinity of said semiconductor body and a luminescence conversion encapsulation enclosing at least a part of said semiconductor body and partial regions of said first and second electrical terminals, wherein a transparent encapsulation includes light diffusing particles.

5. A light-radiating semiconductor component, comprising:

a semiconductor body emitting electromagnetic radiation during an operation of the semiconductor component, said semiconductor body having a semiconductor layer sequence suitable for emitting electromagnetic radiation of a first wavelength range

selected from a spectral region consisting of ultraviolet, blue, and green;

a first electrical terminal and a second electrical terminal each electrically conductively connected to said semiconductor body;

a luminescence conversion element with at least one luminescent material, said luminescence conversion element converting a radiation originating in the first wavelength range into radiation of a second wavelength range different from the first wavelength range, such that the semiconductor component emits polychromatic radiation comprising radiation of the first wavelength range and radiation of the second wavelength range; wherein

said luminescence conversion element comprising a luminescence conversion encapsulation produced from a silicone and containing inorganic luminescence material selected from the group consisting of garnets doped with rare earths, alkaline earth metal sulfides doped with rare earths, thiogallates doped with rare earths, aluminates doped with rare earths, and orthosilicates doped with rare earths.

6. A light-radiating semiconductor component, comprising:

a semiconductor body emitting electromagnetic radiation during an operation of the semiconductor component, said semiconductor body having a semiconductor layer sequence suitable for emitting electromagnetic radiation of a first wavelength range selected from a spectral region consisting of ultraviolet, blue, and green;

a first electrical terminal and a second electrical terminal each electrically conductively connected to said semiconductor body;

a luminescence conversion element with at least one luminescent material, said luminescence conversion element converting a radiation originating in the first wavelength range into radiation of a second wavelength range different from the first wavelength range, such that the semiconductor component emits polychromatic radiation comprising radiation of the first wavelength range and radiation of the second wavelength range; and

said luminescence conversion element being formed such that the radiation of the first wavelength range passes through said luminescence conversion element along a plurality of paths, the plurality of paths having a substantially equal path length inside said luminescence conversion element, and said luminescence conversion element emitting a substantial portion of the radiation of the first wavelength range and the radiation of the second wavelength range,

wherein said luminescence conversion element is directly deposited on said semiconductor body; and

wherein the radiation emitted by said semiconductor body has a luminescence intensity maximum at a wavelength of or below 520 nm.

7. The semiconductor component according to claim **1**, **2**, **3**, **4**, **5** or **6** wherein said luminescence conversion layer converts radiation of the first wavelength range into radiation of a plurality of second wavelength ranges from mutually different spectral subregions, such that the semiconductor component emits polychromatic radiation comprising radiation of the first wavelength range and radiation of the plurality of second wavelength ranges.

8. The semiconductor component according to claim **1**, **2**, **3**, **4**, **5** or **6**, wherein the semiconductor component has a defined main radiating direction, and said luminescence conversion layer is disposed substantially downstream of said semiconductor body in the main radiating direction of the semiconductor component.

9. The semiconductor component according to claim **2**, wherein said luminescence conversion element is at least one luminescence conversion layer disposed in a vicinity of said semiconductor body.

10. The semiconductor component according to claim **2**, wherein said luminescence conversion element is a luminescence conversion encapsulation enclosing at least a part of said semiconductor body and partial regions of said first and second electrical terminals.

11. The semiconductor component according to claim **3** or **4**, wherein said second wavelength range includes wavelengths at least some of which are longer than wavelengths of the first wavelength range.

12. The semiconductor component according to claim **3** or **4**, wherein said semiconductor body is adapted to emit ultraviolet radiation during operation of the semiconductor component, and said luminescence conversion element converts at least a portion of the ultraviolet radiation into visible light.

13. The semiconductor component according to claim **3** or **4**, wherein the first wavelength range and the second wavelength range of the polychromatic radiation lie at least partially in mutually complementary-color spectral regions, and a combination of radiation from the first and second wavelength range results in white light.

14. The semiconductor component to claim **3** or **4**, wherein said luminescence conversion element converts radiation of the first wavelength range into radiation of a plurality of second wavelength ranges from mutually different spectral subregions, such that the semiconductor

component emits polychromatic radiation comprising radiation of the first wavelength range and radiation of the plurality of second wavelength ranges, wherein the first wavelength range emitted by said semiconductor body and two second wavelength ranges produce an additive color triad, such that white light is radiated by the semiconductor component during operation thereof.

15. The semiconductor component according to claim **3** or **4**, wherein the radiation emitted by said semiconductor body has a luminescence intensity maximum in a blue spectral region at a wavelength between 420 nm and 460 nm.

16. The semiconductor component according to claim **3** or **4**, which further comprises an opaque base housing formed with a recess, and wherein said semiconductor body is disposed in said recess of said base housing, and including a covering layer having a luminescence conversion layer on said recess.

17. The semiconductor component according to claim **3** or **4**, which further comprises an opaque base housing formed with a recess, and wherein said semiconductor body is disposed in said recess of said base housing, and wherein said recess is at least partially filled with said luminescence conversion element.

18. The semiconductor component according to claim **2**, **3** or **4**, wherein said luminescence conversion element includes organic dye molecules in a plastic matrix.

19. The semiconductor component according to claim **2**, **3** or **4**, wherein said luminescence conversion element includes organic dye molecules in a plastic matrix, and wherein said plastic matrix is formed from a plastic material selected from the group consisting of silicone, thermoplastic material, and thermosetting plastic material.

20. The semiconductor component according to claim **2**, **3** or **4**, wherein said luminescence conversion element includes organic dye molecules in a plastic matrix, and wherein said luminescence conversion element has organic dye molecules in a matrix selected from the group consisting of an epoxy resin matrix and a polymethyl methacrylate matrix.

21. The semiconductor component according to claim **2**, **3** or **4**, wherein said luminescence conversion element has at least one inorganic luminescence material selected from the phosphor group.

22. The semiconductor component according to claim **2**, **3** or **4**, wherein the inorganic luminescent material is selected from the group of Ce-doped garnets.

23. The semiconductor component according to claim **2**, **3** or **4**, wherein the inorganic luminescent material is YAG:Ce.

24. The semiconductor component according to claim **2**, **3** or **4**, wherein said luminescence conversion element has at least one inorganic luminescence material selected from the phosphor group, and wherein the inorganic luminescent material is embedded in an epoxy resin matrix.

25. The semiconductor component according to claim **2**, **3** or **4**, wherein said luminescence conversion element has at least one inorganic luminescence material selected from the phosphor group, and wherein the inorganic luminescent material is embedded in a matrix formed of inorganic glass with a relatively low melting point.

26. The semiconductor component according to claim **2**, **3** or **4**, wherein said luminescence conversion element has at least one inorganic luminescence material selected from the phosphor group, and wherein the inorganic luminescent material is embedded in an epoxy resin matrix, and wherein the inorganic luminescent material has a mean particle size of approximately 10 μm.

27. The semiconductor component according to claim **2**, **3** or **4**, wherein said luminescence conversion element is provided with a plurality of mutually different materials selected from the group consisting of organic and inorganic luminescent materials.

28. The semiconductor component according to claim **2**, **3** or **4**, wherein said luminescence conversion element includes dye molecules selected from the group consisting of organic and inorganic dye molecules partly with and partly without a wavelength conversion effect.

29. The semiconductor component according to claim **2**, **3** or **4**, wherein said luminescence conversion element comprises at least one luminescent 4f-organometallic compound.

30. The semiconductor component according to claim **2**, **3** or **4**, wherein said luminescence conversion element includes a luminescent material that is luminescent in a blue region.

31. The semiconductor component according to claim **2** which comprises a transparent encapsulation with a luminescent material that is luminescent in a blue region.

32. A full-color LED display device, comprising a plurality of the light-radiating semiconductor components of claim **2**, **3** or **4** arranged in a full-color LED display.

33. In an interior lighting of an aircraft cabin plurality of the light-radiating semiconductor components according to claim **2**, **3** or **4**.

34. The combination with a display device, a plurality of the semiconductor components according to claim **2**, **3** or **4** disposed to illuminate a display of the display device.

35. The combination with a display device, a plurality of the semiconductor components according to claim **2**, **3** or **4** disposed to illuminate a display of the display device,, wherein said display device includes a liquid crystal display.

36. The semiconductor component according to claim **3**, **4** or **6** wherein said luminescence conversion element is at least one luminescence conversion layer disposed in a vicinity of said semiconductor body.

37. The semiconductor component according to claim **3**, **4**, **5** or **6** wherein said luminescence conversion element is a luminescence conversion encapsulation enclosing at least a part of said semiconductor body and partial regions of said first and second electrical terminals.

38. The semiconductor component according to claim **1**, **5**, or **6** wherein said second wavelength range includes wavelengths at least some of which are longer than wavelengths of the first wavelength range.

39. The semiconductor component according to claim **1**, **5** or **6** wherein said semiconductor body is adapted to emit ultraviolet radiation during operation of the semiconductor component, and said luminescence conversion element converts at least a portion of the ultraviolet radiation into visible light.

40. The semiconductor component according to claim **1**, **5** or **6** wherein the first wavelength range and the second wavelength range of the polychromatic radiation lie at least partially in mutually complementary-color spectral regions, and a combination of radiation from the first and second wavelength range results in white light.

41. The semiconductor component according to claim **1**, **5** or **6**, wherein said luminescence conversion element converts radiation of the first wavelength range into radiation of a plurality of second wavelength ranges from mutually different spectral subregions, such that the semiconductor component emits polychromatic radiation comprising radiation of the first wavelength range and radiation of the plurality of second wavelength ranges, wherein the first

wavelength range emitted by said semiconductor body and two second wavelength ranges produce an additive color triad, such that white light is radiated by the semiconductor component during operation thereof.

42. The semiconductor component according to claim **1**, **5** or **6** wherein the radiation emitted by said semiconductor body has a luminescence intensity maximum in a blue spectral region at a wavelength between 420 nm and 460 nm.

43. The semiconductor component according to claim **1** which further comprises an opaque base housing formed with a recess, and wherein said semiconductor body is disposed in said recess of said base housing, and including a covering layer having a luminescence conversion layer on said recess.

44. The semiconductor component according to claim **1**, **5** or **6** which further comprises an opaque base housing formed with a recess, and wherein said semiconductor body is disposed in said recess of said base housing, and wherein said recess is at least partially filled with said luminescence conversion element.

45. The semiconductor component according to claim **6**, wherein said luminescence conversion element includes organic dye molecules in a plastic matrix.

46. The semiconductor component according to claim **6**, wherein said luminescence conversion element includes organic dye molecules in a plastic matrix, and wherein said plastic matrix is formed from a plastic material selected from the group consisting of silicone, thermoplastic material, and thermosetting plastic material.

47. The semiconductor component according to claim **6**, wherein said luminescence conversion element includes organic dye molecules in a plastic matrix, and wherein said luminescence conversion element has organic dye molecules in a matrix selected from the group consisting of an epoxy resin matrix and a polymethyl methacrylate matrix.

48. The semiconductor component according to claim **5** or **6**, wherein said luminescence conversion element has at least one inorganic luminescence material selected from the phosphor group.

49. The semiconductor component according to claim **1**, **5** or **6**, wherein the inorganic luminescent material is selected from the group of Ce-doped garnets.

50. The semiconductor component according to claim **1**, **5** or **6**, wherein the inorganic luminescent material is YAG:Ce.

51. The semiconductor component according to claim **6** wherein said luminescence conversion element has at least one inorganic luminescence material selected from the phosphor group, and wherein the inorganic luminescent material is embedded in an epoxy resin matrix.

52. The semiconductor component according to claim **6**, wherein said luminescence conversion element has at least one inorganic luminescence material selected from the phosphor group, and wherein the inorganic luminescent material is embedded in a matrix formed of inorganic glass with a relatively low melting point.

53. The semiconductor component according to claim **6**, wherein said luminescence conversion element has at least one inorganic luminescence material selected from the phosphor group, and wherein the inorganic luminescent material is embedded in an epoxy resin matrix, and wherein the inorganic luminescent material has a mean particle size of approximately 10 μm.

54. The semiconductor component according to claim **2**, **3** or **4**, wherein said luminescence conversion element is provided with a plurality of mutually different materials selected from the group consisting of organic and inorganic luminescent materials.

55. The semiconductor component according to claim **5** or **6**, wherein said luminescence conversion element includes dye molecules selected from the group consisting of organic and inorganic dye molecules partly with and partly without a wavelength conversion effect.

56. The semiconductor component according to claim **1**, **5** or **6** herein said luminescence conversion element comprises at least one luminescent 4f-organometallic compound.

57. The semiconductor component according to claim **1**, **5** or **6** wherein said luminescence conversion element includes a luminescent material that is luminescent in a blue region.

58. The semiconductor component according to claim **5** or **6** which comprises a transparent encapsulation with a luminescent material that is luminescent in a blue region.

59. A full-color LED display device comprising a plurality of the light-radiating semiconductor components of claim **5** or **6** arranged in a full-color LED display.

60. In an interior lighting of an aircraft cabin, a plurality of the light-radiating semiconductor components according to claim **1**, **5** or **6**.

61. The combination with a display device, a plurality of the semiconductor components according to claim **1**, **5** or **6** disposed to illuminate a display of the display device.

62. The semiconductor component according to claim **7**, wherein the first wavelength range emitted by said semiconductor body and two second wavelength ranges produce an additive color triad, such that white light is radiated by the semiconductor component during operation thereof.

63. The semiconductor component according to claim **2**, **3**, **4** or **5**, wherein the radiation emitted by said semiconductor body has a luminescence intensity maximum at a wavelength $\lambda \leqq 520$ nm.

64. The semiconductor component according to claim **1**, wherein said luminescence conversion element comprises a plurality of layers with mutually different wavelength conversion properties.

65. The semiconductor component according to claim **1**, wherein the inorganic luminescent material has a mean particle size of approximately 10 μm.

66. The semiconductor component according to claim **1**, **2**, **5** or **6**, wherein said luminescence conversion element includes light-diffusing particles.

67. The semiconductor component according to claim **1**, **2**, **5** or **6** which comprises a transparent encapsulation with light-diffusing particles.

68. The semiconductor component according to claim **1**, **2**, **3**, **4**, **5** or **6**, wherein said luminescence conversion element is surrounded by a further transparent encapsulation.

69. The combination with a display device, a plurality of the semiconductor components according to claim **5** or **6** disposed to illuminate a display of the display device, wherein said display device includes a liquid crystal display.

* * * * *

F

US007126162B2

(12) **United States Patent**
Reeh et al.

(10) **Patent No.: US 7,126,162 B2**
(45) **Date of Patent: *Oct. 24, 2006**

(54) **LIGHT-RADIATING SEMICONDUCTOR COMPONENT WITH A LUMINESCENCE CONVERSION ELEMENT**

(75) Inventors: **Ulrike Reeh**, München (DE); **Klaus Höhn**, Taufkirchen (DE); **Norbert Stath**, Regensburg (DE); **Günter Waitl**, Regensburg (DE); **Peter Schlotter**, Freiburg (DE); **Jürgen Schneider**, Kirchzarten (DE); **Ralf Schmidt**, Vörstetten (DE)

(73) Assignee: **Osram GmbH**(DE)

(*) Notice: Subject to any disclaimer, the term of this patent is extended or adjusted under 35 U.S.C. 154(b) by 0 days.

This patent is subject to a terminal disclaimer.

(21) Appl. No.: **11/080,786**

(22) Filed: **Mar. 15, 2005**

(65) **Prior Publication Data**

US 2005/0161694 A1 Jul. 28, 2005

Related U.S. Application Data

(63) Continuation of application No. 09/221,789, filed on Dec. 28, 1998, now Pat. No. 7,078,732, which is a continuation of application No. PCT/DE97/01337, filed on Jun. 26, 1997.

(30) **Foreign Application Priority Data**

Jun. 26, 1996 (DE) 196 25 622
Sep. 20, 1996 (DE) 196 38 667

(51) **Int. Cl.**
H01L 33/00 (2006.01)

(52) **U.S. Cl.** **257/98**; 257/E33.061; 257/100

(58) **Field of Classification Search** 257/98, 257/E33.061
See application file for complete search history.

(56) **References Cited**

U.S. PATENT DOCUMENTS

2,096,693 A 10/1937 Cox 313/485
2,192,869 A 3/1940 Pearce 313/485
3,312,851 A 4/1967 Flowers et al.
3,316,109 A 4/1967 Rimbach

(Continued)

FOREIGN PATENT DOCUMENTS

BE 1 007 825 10/1995

(Continued)

OTHER PUBLICATIONS

Summons and Complaint re: *Citizen Electronics Company, Ltd.* v. *Osram GmbH and Osram Opto Semiconductors GmbH*, Case No. 1:05CV01560.

(Continued)

Primary Examiner—Jerome Jackson
(74) *Attorney, Agent, or Firm*—Fish & Richardson P.C.

(57) **ABSTRACT**

The light-radiating semiconductor component has a radiation-emitting semiconductor body and a luminescence conversion element. The semiconductor body emits radiation in the ultraviolet, blue and/or green spectral region and the luminescence conversion element converts a portion of the radiation into radiation of a longer wavelength. This makes it possible to produce light-emitting diodes which radiate polychromatic light, in particular white light, with only a single light-emitting semiconductor body. A particularly preferred luminescence conversion dye is YAG:Ce.

38 Claims, 6 Drawing Sheets

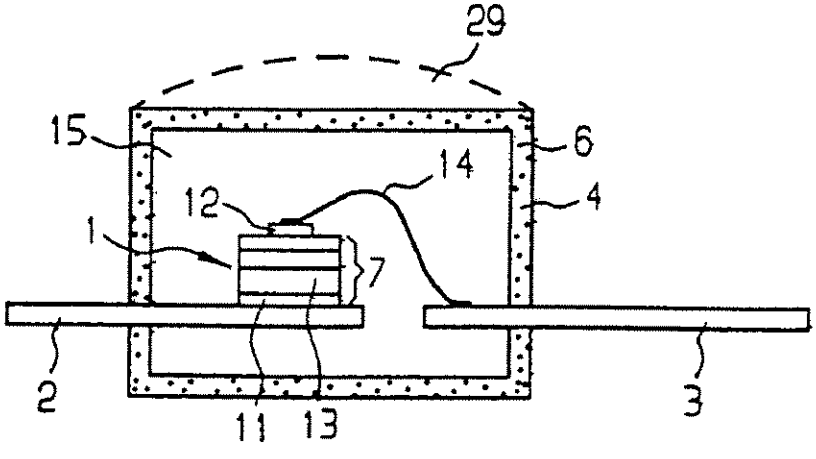

U.S. PATENT DOCUMENTS

3,440,471	A		4/1969	Baczewski et al.
3,453,604	A		7/1969	Geusic et al.
3,483,416	A		12/1969	Vermeulen
3,510,732	A		5/1970	Amans 257/77
3,529,200	A		9/1970	Potter et al.
3,565,815	A		2/1971	Christy
3,573,568	A		4/1971	Siegel
3,593,055	A		7/1971	Geusie 257/98
3,602,758	A		8/1971	Thornton 313/485
3,621,340	A		11/1971	Singh
3,654,463	A		4/1972	Geusic
3,659,136	A		4/1972	Grodkiewicz
3,691,482	A		9/1972	Pinnow 330/108
3,699,478	A		10/1972	Pinnow et al. 332/7.51
3,700,479	A		10/1972	Arents
3,715,611	A		2/1973	De Mesquita et al.
3,740,616	A		6/1973	Suzuki et al.
3,742,277	A		6/1973	Peters
3,742,833	A		7/1973	Sewell et al.
3,743,833	A		7/1973	Mantic et al.
3,774,086	A		11/1973	Vincent, Jr.
3,787,684	A		1/1974	Isenberg
3,819,974	A		6/1974	Stevenson et al.
3,822,215	A		7/1974	Grodkiewicz
3,875,456	A		4/1975	Kano et al. 313/501
3,932,881	A		1/1976	Mita 257/98
3,942,185	A		3/1976	Lebailly
3,976,877	A		8/1976	Thillays
4,093,890	A		6/1978	Verriet et al.
4,139,657	A		2/1979	Wantanabe
4,146,790	A		3/1979	Goetzberger et al.
4,173,495	A		11/1979	Rapp et al.
4,178,274	A		12/1979	Denk et al.
4,203,792	A		5/1980	Thompson
4,228,490	A		10/1980	Thillays
4,262,206	A		4/1981	Viehmann
4,298,820	A		11/1981	Bongers et al. 313/463
4,307,297	A		12/1981	Groff et al.
4,365,052	A		12/1982	Reeh et al.
4,431,941	A		2/1984	Roy et al.
4,479,886	A		10/1984	Kasenga 252/301.4
4,495,514	A		1/1985	Lawrence et al.
4,550,256	A		10/1985	Berkstresser et al.
4,599,537	A		7/1986	Yamashita
4,684,592	A		8/1987	Matsuda et al.
4,707,635	A		11/1987	Tateyama et al.
4,710,674	A		12/1987	Sigai
4,716,337	A	*	12/1987	Huiskes et al. 313/487
4,727,283	A		2/1988	van Kemenade et al. ... 313/487
4,734,619	A		3/1988	Havel
4,758,449	A		7/1988	Kimura et al.
4,780,752	A		10/1988	Angerstein et al. 357/72
4,816,369	A		3/1989	Matsuda et al.
4,818,434	A		4/1989	Lindmayer
4,818,983	A		4/1989	Hara et al.
4,825,124	A		4/1989	Sigai
4,843,280	A		6/1989	Lumbard et al.
4,851,695	A		7/1989	Stein
4,875,750	A		10/1989	Spaeth et al.
4,894,583	A		1/1990	Berkstresser et al.
4,935,856	A		6/1990	Dragoon
5,003,181	A		3/1991	Morlotti et al.
5,019,746	A		5/1991	Merg
5,035,483	A		7/1991	Waitl et al.
5,035,513	A		7/1991	Fehrenbach et al.
5,107,317	A		4/1992	Takasaki 357/30
5,126,214	A		6/1992	Tokailin 313/503
5,166,456	A		11/1992	Yoshino
5,184,114	A		2/1993	Brown
5,196,763	A		3/1993	Yang et al.
5,202,777	A		4/1993	Sluzky et al. 357/50
RE34,254	E		5/1993	Dragoon
5,208,462	A		5/1993	O'Conner et al.
5,252,851	A		10/1993	Mita et al.
5,294,897	A		3/1994	Notani et al.
5,369,289	A		11/1994	Tamaki et al.
5,379,186	A		1/1995	Gold et al.
5,382,452	A		1/1995	Bruno et al.
5,387,836	A		2/1995	Adachi et al.
5,417,886	A		5/1995	Tateiwa et al.
5,424,573	A		6/1995	Kato et al.
5,432,358	A		7/1995	Nelson et al.
5,471,113	A		11/1995	De Backer et al.
5,479,050	A		12/1995	Pritchard et al.
5,535,230	A		7/1996	Abe 257/98
5,543,657	A		8/1996	Diffenderfer et al.
5,545,386	A		8/1996	Kaneyoshi et al.
5,578,839	A		11/1996	Nakamura et al.
5,600,202	A		2/1997	Yamada et al.
5,602,418	A		2/1997	Imai et al.
5,607,621	A		3/1997	Ishihara et al.
5,624,602	A		4/1997	Lenox et al.
5,635,110	A		6/1997	Chadha et al.
5,643,674	A		7/1997	Bruno et al.
5,652,438	A		7/1997	Sassa et al.
5,656,832	A		8/1997	Ohba et al.
5,665,793	A		9/1997	Anders
5,670,798	A		9/1997	Schetzina
5,685,071	A		11/1997	Gates, Jr. et al.
5,707,549	A		1/1998	Matsukiyo et al.
5,744,233	A		4/1998	Opitz et al.
5,747,832	A		5/1998	Nakamura et al.
5,772,916	A		6/1998	Jamil et al.
5,788,881	A		8/1998	Chadha et al.
5,798,537	A		8/1998	Nitta 257/103
5,813,752	A		9/1998	Singer et al.
5,813,753	A		9/1998	Vriens et al.
5,847,507	A		12/1998	Butterworth et al. 313/512
5,863,810	A		1/1999	Kaldenberg
5,879,647	A		3/1999	Wataya et al.
5,906,771	A		5/1999	Watkins et al.
5,952,036	A		9/1999	Tadaki et al.
5,959,316	A		9/1999	Lowery 257/98
5,994,722	A		11/1999	Averbeck et al.
5,998,925	A		12/1999	Shimizu et al.
6,066,861	A		5/2000	Hohn et al.
6,069,440	A		5/2000	Shimizu et al. 313/486
6,078,063	A		6/2000	Nakamura et al.
6,085,971	A		7/2000	Tews et al.
6,140,040	A		10/2000	Palm et al.
6,180,029	B1		1/2001	Hampden-Smith et al.
6,245,259	B1		6/2001	Hohn et al. 252/301.36
6,277,301	B1		8/2001	Hohn et al.
6,295,750	B1		10/2001	Harwell et al.
6,455,213	B1		9/2002	Lee
6,576,930	B1		6/2003	Reeh et al.
6,592,780	B1		7/2003	Hohn et al.
6,596,141	B1		7/2003	Rasmussen
6,600,175	B1		7/2003	Baretz et al. 257/100
6,613,247	B1		9/2003	Hohn et al. 252/301.36
6,666,993	B1		12/2003	Milewski
6,692,659	B1		2/2004	Brown et al.
6,812,500	B1		11/2004	Reeh et al.
2001/0030326	A1		10/2001	Reeh et al.
2001/0045647	A1		11/2001	Hohn et al.
2004/0016908	A1		1/2004	Hohn et al.
2004/0016938	A1		1/2004	Baretz et al. 257/100
2004/0094757	A1		5/2004	Braune et al.
2005/0127385	A1		6/2005	Reeh et al.

FOREIGN PATENT DOCUMENTS

DE	1915290	10/1969
DE	2018353 C	10/1970

DE	2018354 C	10/1970
DE	2059909	6/1971
DE	7128442	12/1971
DE	2 347 289	4/1974
DE	26 42 465	3/1978
DE	2835184	2/1979
DE	33 15 675 A1	11/1983
DE	38 04 293 A1	8/1989
DE	3804293	8/1989
DE	90 13 615	1/1991
DE	4432035	3/1996
DE	196 38 667	4/1998
DE	297 24 381	3/2001
DE	29724458	5/2001
EP	0039017 B1	8/1985
EP	0333162	9/1989
EP	0 387 715	9/1990
EP	0 486 052 A1	5/1992
EP	97 933 047.9	1/1999
EP	0936682	8/1999
EP	0 862 794	9/1999
FR	2004989	12/1969
FR	2043403	2/1971
FR	2044727	2/1971
FR	2073134	9/1971
GB	1263185	2/1972
GB	1317731	5/1973
GB	1317732	5/1973
GB	1332462	10/1973
GB	2000173	1/1979
GB	2053953	2/1981
GB	1589964	5/1981
GB	2149416	6/1985
JP	56-1224	9/1956
JP	46-7462	12/1971
JP	47-017684	9/1972
JP	48-6962	3/1973
JP	46-39866	6/1973
JP	49-1221	1/1974
JP	49-24355	3/1974
JP	49-122292	11/1974
JP	50-43913	4/1975
JP	50-74875	6/1975
JP	51145288	12/1976
JP	52-009334	1/1977
JP	52-9334	2/1977
JP	52-40959	10/1977
JP	52-45181	10/1977
JP	53001180	1/1978
JP	53-100787	9/1978
JP	54-41660	5/1979
JP	55-4898	1/1980
JP	55-5533	1/1980
JP	56-005884	1/1981
JP	58-043584	3/1983
JP	59-50455	4/1984
JP	60-185457	9/1985
JP	61-240680	10/1986
JP	61-248839	11/1986
JP	60090680	11/1986
JP	62-20237	1/1987
JP	62-94659	6/1987
JP	62201989	9/1987
JP	62-232827	10/1987
JP	2-91980	9/1988
JP	63-280467	11/1988
JP	64-71053	3/1989
JP	01-179471	7/1989
JP	01175103	7/1989
JP	1189695	7/1989
JP	01260707	10/1989
JP	02011694	1/1990
JP	2080970	3/1990
JP	2-138361	5/1990
JP	2138361	5/1990
JP	03220286	9/1991
JP	03287690	12/1991
JP	4110236	4/1992
JP	04 063162	5/1992
JP	04137570	5/1992
JP	4142070	5/1992
JP	4-175265	6/1992
JP	4-38538	9/1992
JP	5-38926	5/1993
JP	5-152609	6/1993
JP	5-63068	8/1993
JP	05315652	11/1993
JP	05315653	11/1993
JP	5-335624	12/1993
JP	05315624	12/1993
JP	05347432	12/1993
JP	6013075	1/1994
JP	6017130	1/1994
JP	06053554	2/1994
JP	6-69546	3/1994
JP	06076754	3/1994
JP	6085314	3/1994
JP	06 104491	4/1994
JP	06163988	6/1994
JP	6/208845	7/1994
JP	06204570	7/1994
JP	6268257	9/1994
JP	6279568	10/1994
JP	06306356	11/1994
JP	8007614	1/1995
JP	7-99345	4/1995
JP	7-42152	7/1995
JP	7-176794	7/1995
JP	7-193281	7/1995
JP	07-292354	7/1995
JP	08-007614	1/1996
JP	8-7614	1/1996
JP	08-032120	2/1996
JP	00864860	3/1996
JP	8-92549	4/1996
JP	08-096958	4/1996
JP	198585/1996	7/1996
JP	244339/1996	9/1996
JP	245381/1996	9/1996
JP	359004/1996	12/1996
JP	09 027642	1/1997
JP	09-028642	2/1997
JP	9-73807	3/1997
JP	081010/1997	3/1997
JP	54-066093	5/1997
JP	10 012925	1/1998
JP	98/05078	5/1998
JP	10-242513	9/1998
JP	2927229	5/1999
JP	02-927279	7/1999
JP	11-220174	8/1999
WO	96/23030	8/1996
WO	97/48138	12/1997
WO	98/12757	3/1998

OTHER PUBLICATIONS

Summons and Complaint re: *Citizen Electronics Company, Ltd.* v. *Osram GmbH and Osram Opto Semiconductors GmbH,* Case No. 1:05CV00112.

Office Action from the Korean Patent Office dated Aug. 25, 2005.

Möllmer et al., "Siemens SMT TOP-LED for Surface Mounting", *Siemens Components,* Bd. 26, No. 6, pp. 193-196 (1991).

Translation of Japanese Office Action Dated Jun. 2, 2005.

Notice of European Opposition Dated Feb. 28, 2005.

Six European Search Reports dated May 25, 2005.

In the Matter of Certain Light-Emitting Diodes and Products Containing Same, Investigation No. 337-TA-512, "Notice of Commission Final Determination of No Violation of Section 337 as to One Patent and Determination to Remand the Investigation as Certain Other Patents," Dated Aug. 10, 2005.
In the Matter of Certain Light-Emitting Diodes and Products Containing Same, Investigation No. 337-TA-512, "Initial Determination on Violation of Section 337 and Recommended Determination on Remedy and Bond," (Public Version), Dated May 10, 2005.
In the Matter of Certain Light-Emitting Diodes and Products Containing Same, Investigation No. 337-TA-512, "Commission Opinion," (Public Version), Dated Aug. 29, 2005.
Robbins et al., Single Crystal Y3A15O12: Tb Phosphor Produced by Ion Implantation:, *Journal of the Electrochemical Society,* vol. 129, No. 4, pp. 816-820.
Poort et al., "Optical properties of Eu2+-activated orthosilicates and orthophosphates" *Journal of Alloys and Compounds,* vol. 260, No. 1-2, pp. 93-97 (Sep. 12, 1997).
B.M. J. Smets, "Phosphors Based On Rare-Earths, A New Era in Fluorescent Lighting", Materials Chemistry and Physics, 16 (1987), pp. 283-299.
Chao et al., *Jour Solid State Chemistry,* "White Light Emitting Glass", p. 17-29.
D.J. Robbins, "The Effects of Crystal Field and Temperature on the Photoluminescence Excitation of Ce^{3+} in YAG", J. Electrochem. Soc.; Solid State Science and Technology, Sep. 1979, vol. 126, No. 9, pp. 1550-1555.
Frank Möllmer et al., "Siemens SMT-TOPLED für die Oberflächenmontage", [Siemens SMT-TOPLEDS for surface mounting], Siemens Components 29, 1991, No. 4, pp. 147-149.
G. Blasse et al., "A New Phosphor For Flying-Spot Ray Tubes For Color Television; Yellow-Emitting $Y_3Al_5O_{12}Ce^{3+}$", Applied Physics Letter, vol. 11, No. 2, Jul. 15, 1967, pp. 53, 54.
German Utility Model G 90 13 615.2., dated Jan. 24, 1991, electroluminescent or laser diode.
Glen A. Slack et al., "Optical Absorption of $Y_3Al_5O_{12}$ from 10- to 55000-cm^{-1} Wave Numbers", Physical review, vol. 177, No. 3, Jan. 15, 1969, pp. 1308-1314.
Japanese Patent Abstract 07176794 A (Yoshinori), dated Jul. 14, 1995.
Japanese Patent Abstract 08007614 (Yoshinori), dated Jan. 12, 1996.
Japanese Patent Abstract No. 5-152609 (Tdatatsu), dated Jun. 18, 1993.
Mary V. Hoffman, "Improved color rendition in high pressure mercury vapor lamps", Journal of IES, Jan. 1977, pp. 89-91.
S.N. Mohammad et al., "Emerging Gallium Nitride Based Devices", Proceedings of the IEEE, vol. 83, No. 10, Oct. 1995, pp. 1306-1355.
Sato et al., "Full-Color . . . Diode", Jpn. J. Appl. Phys., vol. 24 (1996), pp. L838-L839, Jul. 1996.
Shuji Nakamura et al., "The blue laser diode; GaN based light emitters and lasers", Springer Verlag, Berlin, 1997, 99. 216-219, 328.
Siemens Forsch.-u. Entwickl.-Ber Bd 5 (1977) No. 3, p. 162 [Siemens research and development reports, vol. 6].
Thomas Jstel et al., "Neue Entwickungen auf dm Gebiet luminezierender Materialien für Beleuchtungs- und Displayanwendungen" [new developments in the field of luminescent material for lighting and display applications], Angew. Chem., 1998, 110, pp. 3250-3271.
White LED Lamp by Nichia, copy of Japanese Newspaper, dated Sep. 1996.
English Translation of Japanese 01175103 A, Jul. 11, 1989.
English Translation of Japanese 01260707 A, Oct. 18, 1989.
Phosphor Handbook, English Translation of (BAT).
"Phosphor Handbook", Ohm 1987, pp. 172-174, 188-189, 270, 275-276, 383-385.
Nakamura, Shuji et al., Candela-class high-brightness InGan/AlGaN double-heterostructure blue-light-emitting diodes, App. Phys. Lett 64 (13) Mar. 28, 1994, pp. 1687-1689.
Nakamuri, T, "Nichia Chemical starts the sample shipment of white light Emitting Diode", Nikkei Electronics, Sep. 23, 1996 (No. 671), pp. 15-16.
English translation of Nakamuri, T, "Nichia Chemical starts the sample shipment of white light Emitting Diode", Nikkei Electronics, Sep. 23, 1996 (No. 671), pp. 15-16.
Schlotter, P. et al., "Luminescence conversion of blue light emitting diodes", Applied Physics A, Springer Verlag (publ.), Apr. 1997, vol. 4, pp. 417-418.
Material Safety Data Sheet, pp. 1 and 2, and Lamp Phosphor Data Sheet of Phosphor NP-204 of Nichia Corporation.
"Phosphor and Emitter", Osram GmbH, Jun. 1997.
Proceedings of the 264th Institute of Phosphor Society, "Development and Application of high bright white LED Lamps", Nov. 29, 1996, pp. 5-14.
English Translation of Proceedings of 264th Institute of Phosphor Society, "Development and Application of high bright white LED Lamps", Nov. 29, 1996, pp. 5-14.
English Translation of Japanese Patent Application No. 245381, Filed Sep. 18, 1996, Nichia Chemical Industries Ltd.
English Translation of a Japanese Patent Application No. 359004, Filed Dec. 27, 1996, Nichia Chemical Industries Ltd.
English Translation of Japanese Patent Application No. 198585, Filed Jul. 29, 1996, Nichia Chemical Industries Ltd.
English Translation of Japanese Patent Application No. 018010, Filed Mar. 31, 1997, Nichia Chemical Industries Ltd.
Nikkei Sangyo Shinbun (Nikkei Industrial Newspaper), Sep. 13, 1996.
English Abstract of Japanese 7-99345, Apr. 11, 1995.
Excerpt from Nikkei Sangyo Shimbun; Sep. 13, 1996.
Translation of Excerpt from Nikkei Sangyo Shimbun; Sep. 13, 1996.
Journal of the Electrochemical Society, Solid-State Science and Technology, "Preparation of $Y_3Al_5O_{12}$ Based Phosphor Powders", Feb. 1987, pp. 493-498.
Chao et al., "White Light Emitting Glass", Jour. Solid State Chemistry, p. 17-29.
Nakamura, SPIE, "Present performance of InGaN based blue/green/yellow LEDS", vol. 3002, 1997, pp. 26-35.
A Dictionary of Metallurgy, p. 9, 1958.
Japanese Internet Literature, "Preparing Nearly-Spherical Aluminate Phosphors of Uniform Size".
Course of Lectures: Fundamental and Application of Color Image Engineering, No. 5, Television Gakkaishi (The Journal of the Institute of Television Engineers of Japan), vol. 47, 1993, p. 753-764.
R.W.G. Hunt, "Revised Colour-Appearance Model for Related and Unrelated Colours", Color Research and Application, vol. 14, 1991 p. 146-165.
Yoshinobu Nayatani, "Revision of the Chroma and Hue Scaled of a Nonlinear Color-Appearance Model", Color Research and Application, vol. 20, 1995, p. 143-155.
Mitsuo Ikeda et al. "Equivalent Lightness of Colored Objects at Illuminances from the Scotopic to the Photopic Level", Color Research and Application, vol. 14, 1989, p. 198-206.
Mitsuo Ikeda et al., "Equivalent Lightness of Colored Objects of Equal Munsell Chroma and of Equal Munsell Value at Various Illuminances", Color Research and Application, vol. 16, 1991, p. 72-80.
Hiroyuki Shinoda et al., "Categorized Color Space on CRT in the Aperture and the Surface Color Mode", Color Research and Application, vol. 18, 1993, p. 326-333.
Change of Color Conspicuity for Various Illuminance Levels Effects of the Purkuinje shift, Shomei Gakkaishi (Journal of the Illuminating Engineering Institute of Japan, vol. 17, 1987, p. 612-617.
Japanese Journal of Applied Physics, Part 2, vol. 31, No. 10B, 1992, p. L1457-L1459.
Philips Journal of Research, vol. 36, No. 1, 1981, p. 15-30.
Translation of JP 48-39866, May 18, 1973, Japan.
Translation of JP 6-0009, Aug. 19, 1994, Japan.
Translation of JP 5-50611, Jul 2, 1993, Japan.
Translation of JP 5-72553, Oct. 5, 1993, Japan.
P. Bowen, "Particle Size Distribution Measurement from Millimeters to Nanometers and from Rods to Platelets", *Journal of Dispersion Science and Technology,* vol. 23, No. 5, pp. 631-662 (2002).

P. Bowen et al., "Particle Size Distribution Measurement of Anisotropic Particles—Cylinders and Platelets—Practical Examples", Recents Prog. Genie Procedes Recents Progres en Genie des Pr RPGPEX 15 77, Science et (2001).
Bernd Hansen, "Probleme der Ausführbarkeit bei Chemie-Erfindungen", GRUR 2000, No. 6, pp. 469-476.
Ajit Jillavenkatesa et al., *Practice Guide, Particle Size Characterization,* Special Publication 960-1, pp. 125-137 (Jan. 2001).
Shuji Nakamura et al., "Candela-class-high-brightness InGaN/AlGaN double-heterostructure blue-light-emitting diodes", *Applied Physics Letters,* vol. 64, No. 13, pp. 1687-1689 (Mar. 28, 1994).
Curriculum vitae of Dr. Kevin W. Powers, 2005.
Declaration of Dr. Kevin W. Powers in Support of Citizen Electronics Company Ltd.'s Opposition to European Patent 0 862 794 including the references cited therein, Dec. 2005.
Dr. Alan Rawle. "Basic Principles of Particle Size Analysis", Technical Paper by Alan Rawle, Malvern Instruments, Great Britain (1993).
Yuichi Sato et al., "Full-Color Fluorescent Display Devices Using a Near-UV Light-Emitting Diode", *Applied Physics,* vol. 35, No. 7A, pp. L838-L839 (Jul. 1, 1996).
P. Schlotter et al., "Luminescence conversion of blue light emitting diodes", *Applied Physics A,* Materials Science & Processing, Rapid Communication, vol. A, pp. 417-418 (Apr. 1997).
Clive Washington, *Particle Size Analysis in Pharmaceutics and Other Industries Theory and Practice,* Ellis Horwood Limited, pp. 18-23 (1992).
M.F. Yan et al., "Preparation of $Y_3Al_5O_{12}$-Based Phosphor Powders", *Journal of the Electrochemical Society, Solid-State Science and Technology,* vol. 134, No. 2, pp. 493-498 (1987).
ASTM Designation E 1617-97, "Standard Practice for Reporting Particle Size Characterization Data" (1997).
Cabot, "Creating What Matters", "Overview", "Cabot PEDs Technology", and "Glossary Terms", 2005.
Kirk-Othmer Encyclopedia of Chemical Technology, Fourth Edition, Chapter "Pigments (Inorganic)", vol. 19, pp. 1-40, John Wiley & Sons, Inc. New York (1996).
Material Safety Data Sheet, pp. 1-2 with lamp phosphor data sheet of phosphor NP-204 of Nichia Corporation (Feb. 6, 1995).
A.S. Murphy et al., "Breaking the Boundaries of Jameson Cell Capacity" http://www.xstratatech.com/doc/jc_boundaries_en.pdf, 1998.
Nikkei Sangyo Shimbun (Sep. 13, 1996) (Japanese Version).
Osram GmbH "Phosphor and Emitter, Chemical Composition, Optical Properties, Physical Properties, and Application", 1997.
Perry's Chemical Engineers' Handbook, Seventh Edition, "Particle Size Analysis", pp. 20-5-20-6 (1997).
Phosphor Handbook, Ohmsha, Japanese Version, pp. 167-175; 188-189; 268-277; 383-385 (1987).
Phosphor Handbook, Ohmsha, Japanese Version, English Translation of Cover, inside page, pp. 172-173; 188-189; 268-270; 275-277; and 383-386 (1987).
Phosphor Handbook (English version), pp. 351-353; 495-508; 733-738; 317-330, 1999.
Phosphor Handbook (English version), inside page, pp. 732-759, 1999.
Phosphor Technology, "Particle Size Analysis", 1999.
R L Smith/Environmental Health Perspectives, "Review of Glycol Ether and Glycol Ether Ester Solvents Used in the Coating Industry", v. 57, pp. 1-4 (1984).
"4, Nacharbeitbarkeit ohne zumutbaren Aufwand (*4. Reproducibility without undue burden*)"; Rechtsprechung der Beschwerdekammern des Europäischen Patentamts, fourth edition, pp. 170-171 (2001).
Proceedings of the 264th Meeting of the Phosphor Society, "Development and Application of Highbright White LED Lamps", pp. 5-14 (Nov. 29, 1996) (Japanese Version).
Proceedings of the 264th Meeting of the Phosphor Society, "Development and Application of Highbright White LED Lamps", pp. 5-14 (Nov. 29, 1996) (English Version).
Mitsubishi Electronics Technical Journal (Mitsubishi Denki Giho), vol. 48, No. 9, pp. 1121-1123 (Sep. 1974) (Japanese Version).
Mitsubishi Electronics Technical Journal (Mitsubishi Denki Giho), vol. 48, No. 9, pp. 1121-1123 (Sep. 1974) (English Version).
Nikkei Electronics, No. 671, (Sep. 23, 1996) (Japanese Version).
Nikkei Electronics, No. 671, (Sep. 23, 1996) (English Version).
English Translation of Japanese Patent No. 4-63162 dated May 29, 1992.
English Translation of Japanese Patent No. 5-38926 dated May 25, 1993.
Nullity Request by Josef Schmidt to the German Patent Office In the name of and on behalf of Nichia Corporation of Japan dated Dec. 3, 2001.
Notice of Intervention from the European Patent Office dated Jan. 19, 2006 with regard to European Application No. 97909167.5-2203 / 0862794.
English translation of Letter No. 6, Sect. IV, subsections II and III (May 30, 2000).
Preliminary Decision on Demand for Trial of JP 2,927,279 dated Apr. 4, 2001.
DIN 66141 (Feb. 1974).
Nichia Optoelectronic Product Guide, Nichia Chemical Industries, Ltd. (Oct. 1996).
Demand for Trial dated Mar. 3, 2000 re JP2927279.
Written Reply dated Jun. 20, 2000 re JP2927279.
B.M.J. Smets, "Phosphors Based on Rare-Earths, a New Era in Fluorescent Lighting", *Material Chemistry and Physics,* vol. 16 (1987), pp. 283-299.
B. Blasse et al., "A New Phosphor for Flying-Spot Cathode-Ray Tubes for Color Television: Yellow-Emitting $Y_3Al_5O_{12}$-Ce^{3+}", *Applied Physics Letter,* vol. 11, No. 2, pp. 53-55 (Jul. 15, 1967).
Frank Mollmer et al., "Siemens SMT-Topled Für die Oberflächenmontage", *Siemens Components* 29.7/8, pp. 147-149 (1991).
H. Morkoc et al., "Large-band gap SiC, III-V nitride, and II-VI ZnSe-based semiconductor device technologies", J. Applied Physics 76 (3), pp. 1363-1398 (Aug. 1 1994).
Shuji Nakamura, "InGaN/AlGaN blue-light emitting diode", J. Vac. Sci. Technol.A13 (3), pp. 705-710 (May/Jun. 1995).
Mary V. Hoffman, "Improved color rendition in high pressure mercury vapor lamps", Journal of IES (Illuminating Engineering Soc.),pp. 89-91 (Jan. 1977).
F.W. Ostermayer, Jr. et al., "Frequency Upconversion in YF_3: Yb^{3+}, Tm^{3+}", *Physical Review B,* vol. 3, No. 8, pp. 2698-2705 (Apr. 15, 1971).
"Lamp Phosphor Data Sheet", from Nichia Kagaku Kogyo K.K. (May 16, 1995).
"Representation of results of particle size analysis—Part 2: Calculation of average particle sizes/diameters and moments from particle size distributions", *International Standard, ISO 9276-2,* pp. 1-12 (2001).
English Translation of *Decision on Opposition* from the Japanese Patent Office regarding Opposition 01179471 (Jul. 17, 1989).
J.E. Geusic et al., "Efficiency of Red, Green, and Blue Infrared-to-Visible Conversion Sources", *Journal of Applied Physics,* vol. 42, No. 5, pp. 1958-1960 (Apr. 1971).
Marek Osinski,et al., AlGaN/InGaN/GaN blue light emitting diode degradation under pulsed current stress, *Applied Physics Letters,* vol. 69, No. 7, pp. 898-900 (Aug. 12, 1996).
English abstract of Japanese Laid-open Patent 01179471 (Jul. 17, 1989).
Translation of Japanese Laid-open Patent 50-43913 (Apr. 21, 1975).
Translation of Japanese Laid-open Patent 52-40959 (Apr. 8, 1974).
In the Matter of Certain Light-Emitting Diodes and Products Containing Same, Inv. No. 337-TA-512, "Initial Determination on Remand Regarding the Particle Size Patents" (Public Version) (Oct. 31, 2005).
Notice of European Opposition Dated Sep. 15, 2003 for Application No. 97909167.5-2203/0862794.
Translation of Jun. 5, 2001 Office Action in Japanese Patent Application 10-514190.

* cited by examiner

FIG 1

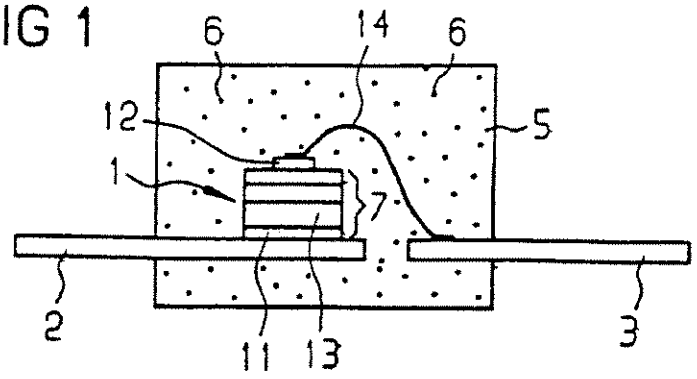

FIG 2

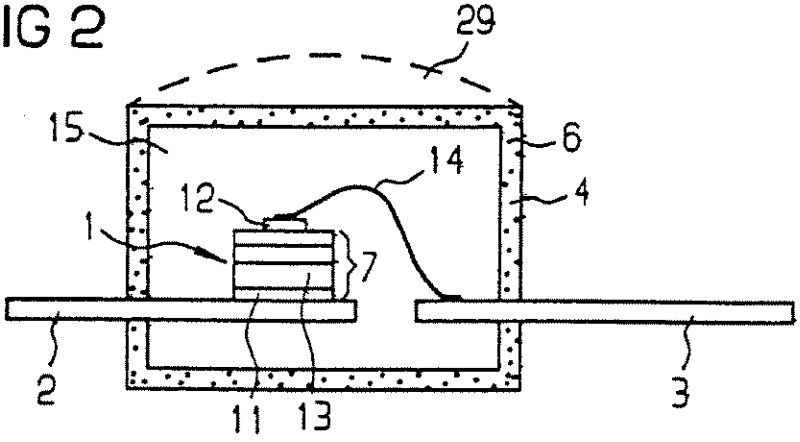

FIG 3

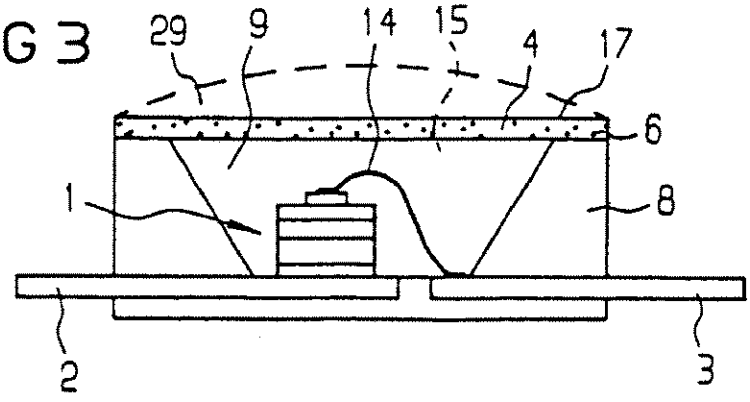

FIG 4

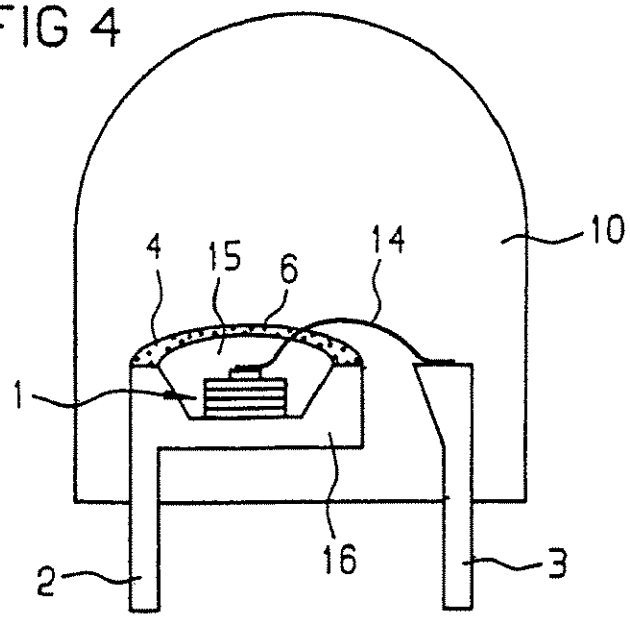

FIG 5

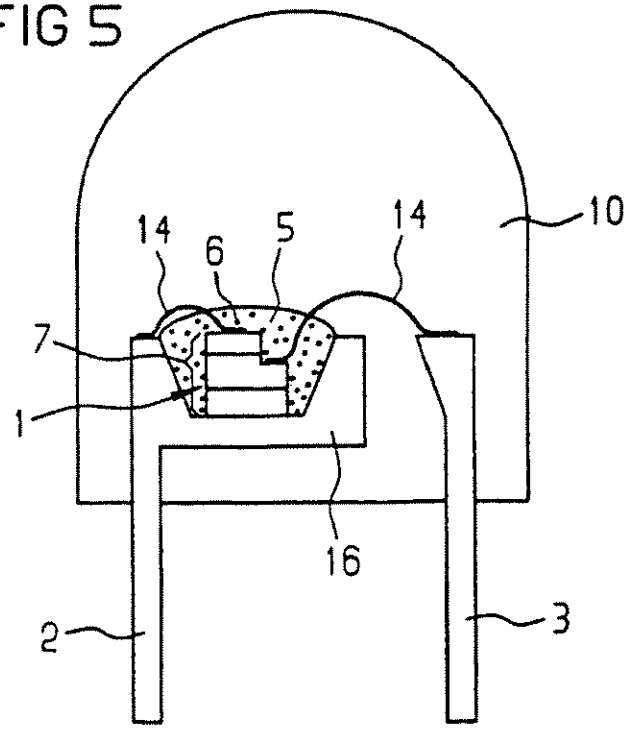

FIG 6

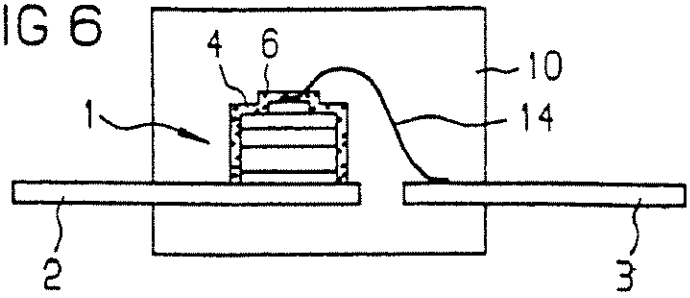

FIG 9

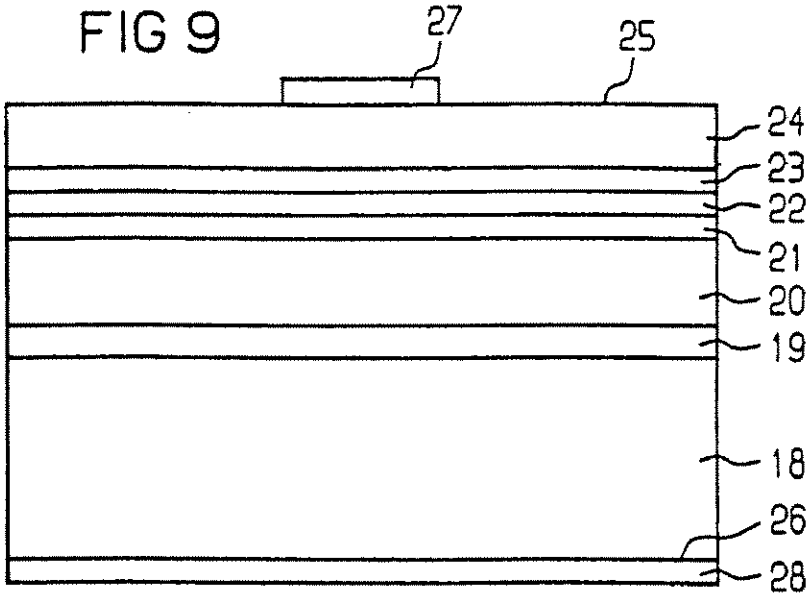

FIG 10

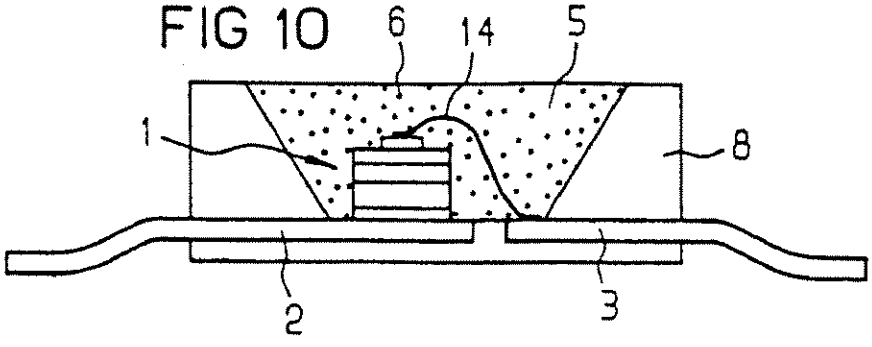

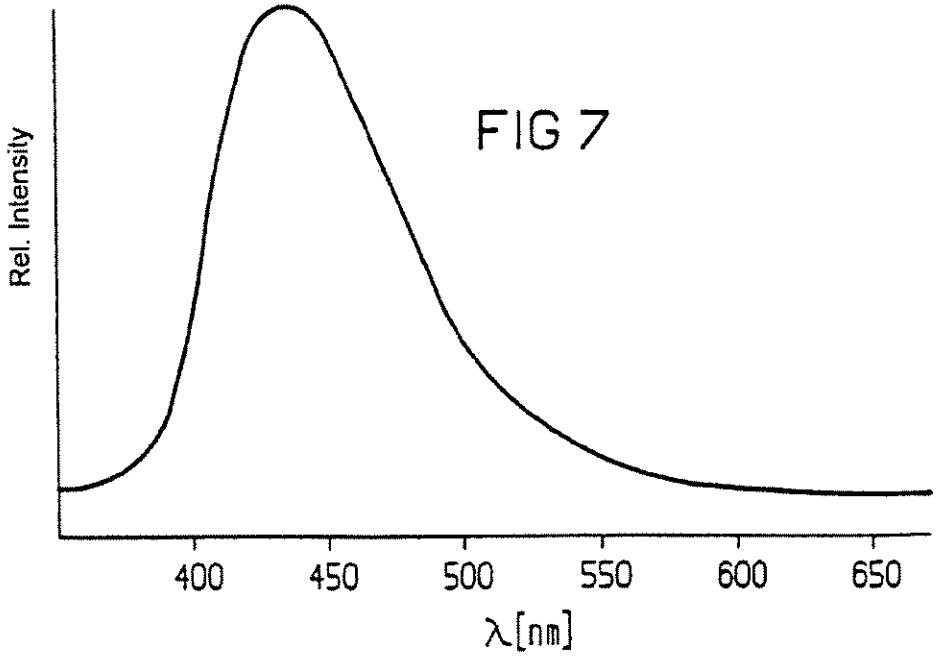
Rel. Intensity
400
450
500
550
600
650
λ[nm]

FIG 7

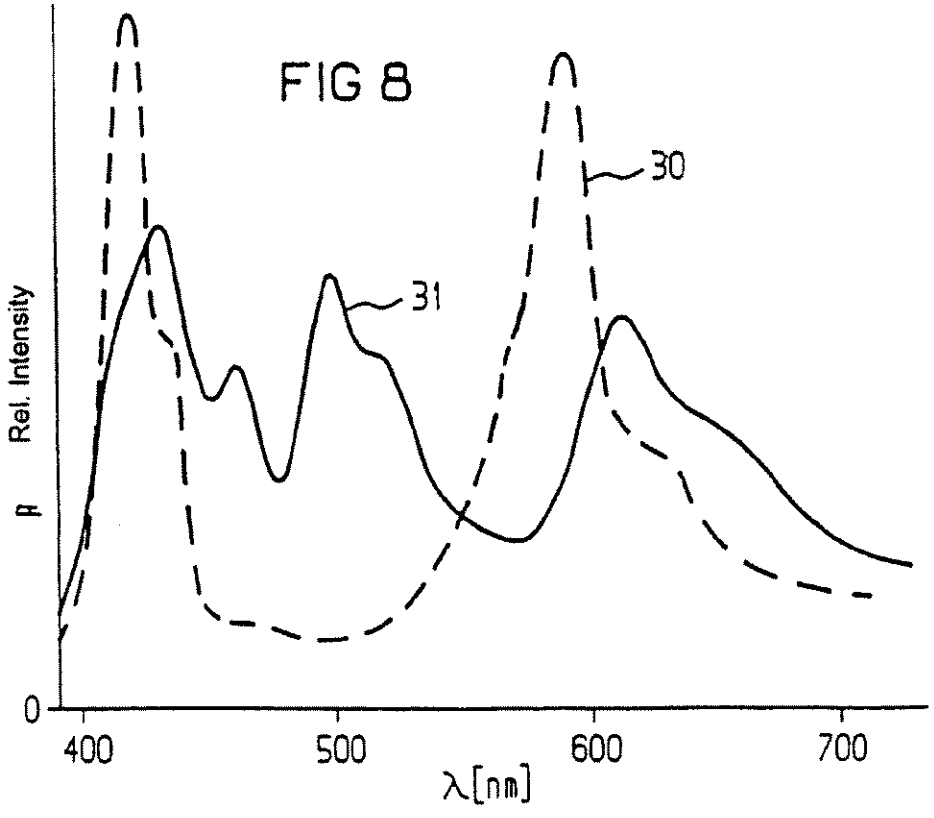
Rel. Intensity
1
0
400
500
600
700
λ[nm]
30
31

FIG 8

FIG 11

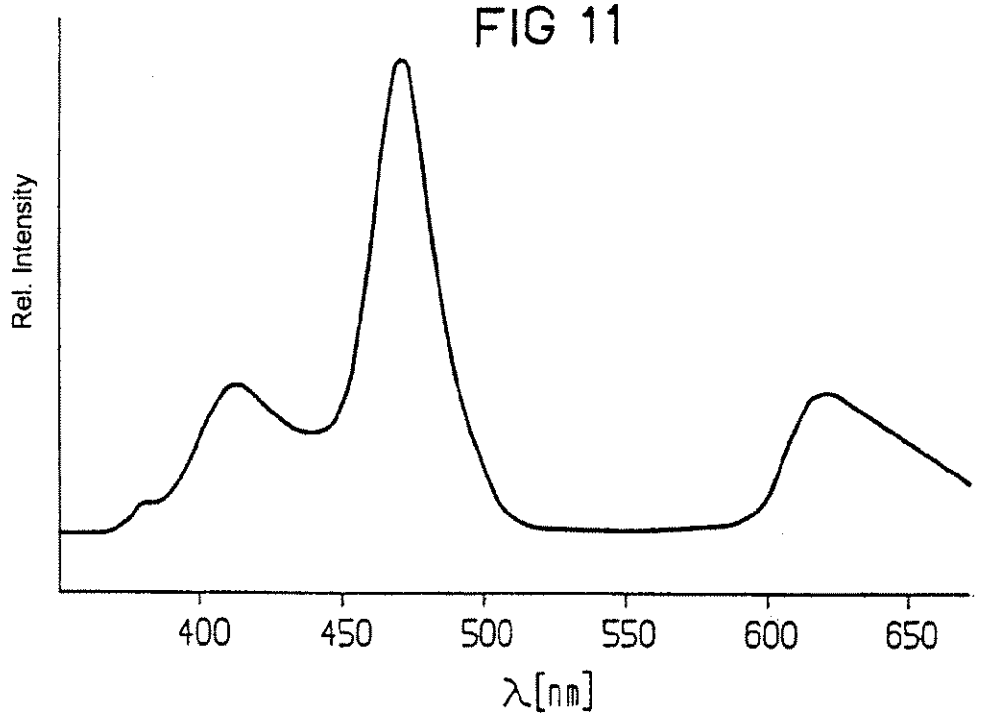
Rel. Intensity
400
450
500
550
600
650
λ[nm]

FIG 12

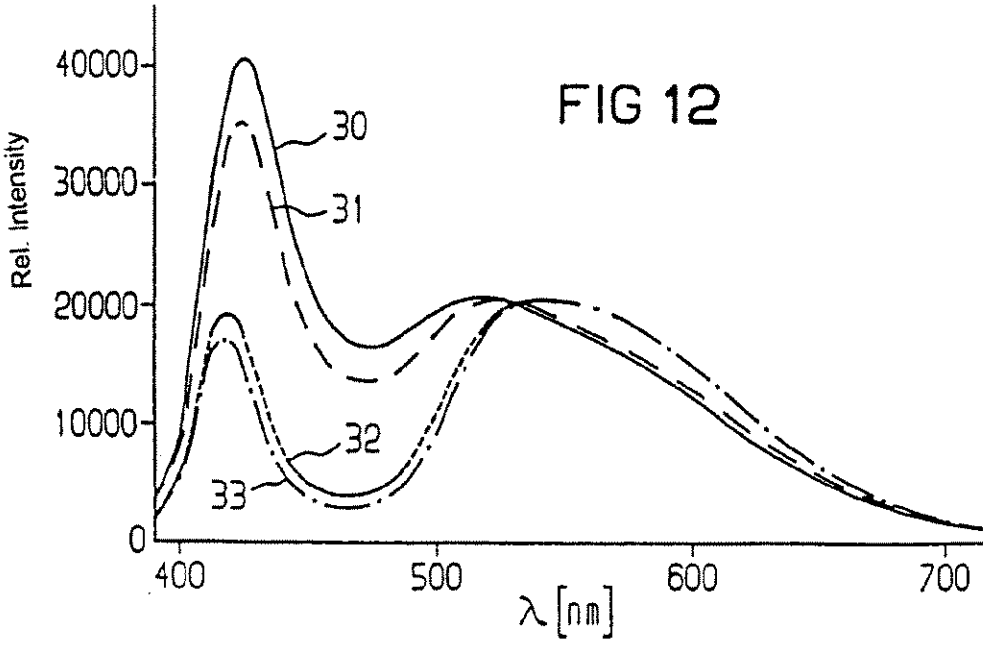
Rel. Intensity
40000
30000
20000
10000
0
30
31
32
33
400
500
600
700
λ[nm]

FIG 13

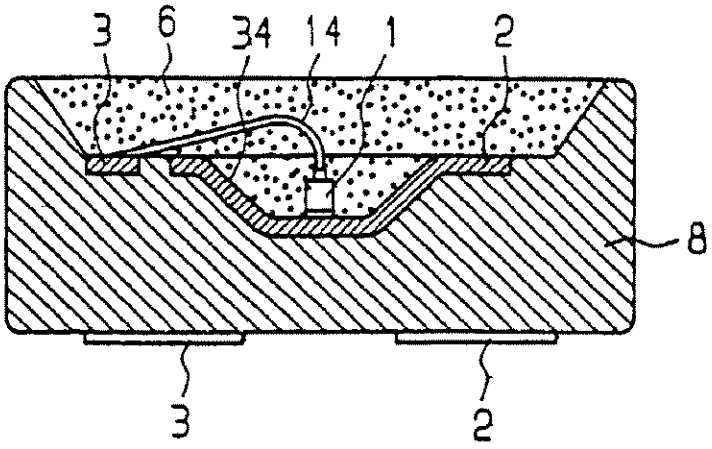

FIG 14

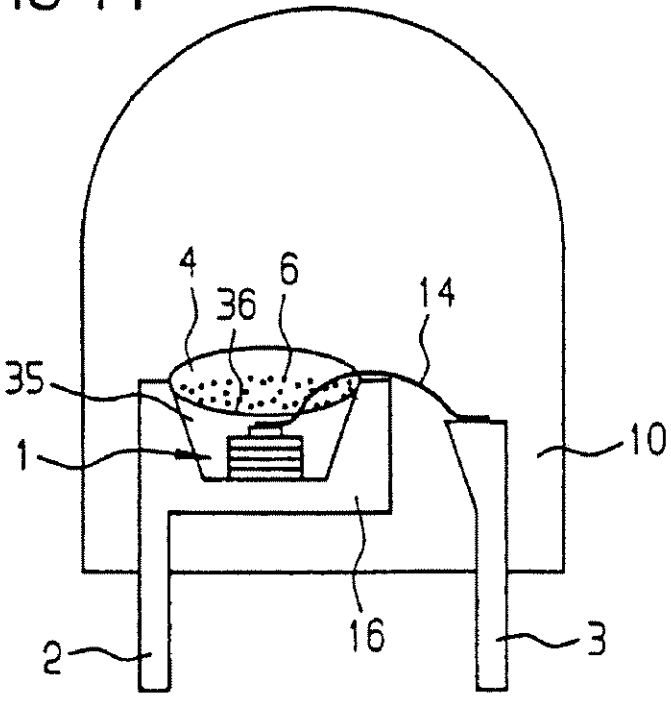

LIGHT-RADIATING SEMICONDUCTOR COMPONENT WITH A LUMINESCENCE CONVERSION ELEMENT

CROSS-REFERENCE TO RELATED APPLICATION

This application is a continuation (and claims the benefit of priority under 35 USC 120) of U.S. application Ser. No. 09/221,789, filed Dec. 28, 1998 U.S. Pat. No. 7,078,732, which is a continuation of PCT/DE97/01337, filed Jun. 26, 1997. This application claims the benefit under 35 USC 119 of German Applications Ser. Nos. 196 25 622.4, filed Jun. 26, 1996, and 196 38 667.5, filed Sep. 20, 1996. The contents of the prior applications mentioned above are incorporated herein by reference in their entirety.

BACKGROUND OF THE INVENTION

Field of the Invention

The invention relates to a light-radiating semiconductor component with a semiconductor body that emits electromagnetic radiation during operation of the semiconductor component. The component has at least one first and at least one second electrical terminal, which are electrically connected to the semiconductor body. The component further has a luminescence conversion element with at least one luminescent material.

A semiconductor component of that type is disclosed, for example, in German published patent application DE 38 04 293. There, an arrangement having an electroluminescent or laser diode in which the entire emission spectrum radiated by the diode is shifted toward greater wavelengths by means of a plastic element that is treated with a fluorescent, light-converting organic dye. The light radiated by the arrangement consequently has a different color from the light emitted by the light-emitting diode. Depending on the nature of the dye added to the plastic, light-emitting diode arrangements which emit light in different colors can be produced using one and the same type of light-emitting diode.

German published patent application DE 23 47 289 discloses an infrared (IR) solid-state lamp in which luminescent material is applied on the edge of an IR diode and converts the IR radiation that is radiated there into visible light. The aim of this measure is, for supervisory purposes, to convert a smallest possible part of the IR radiation emitted by the diode into visible light in conjunction with the smallest possible reduction of the intensity of the emitted IR radiation.

Furthermore, European patent application EP 486 052 discloses a light-emitting diode in which at least one semiconductor photoluminescent layer is arranged between the substrate and an active electroluminescent layer. The semiconductor photoluminescent layer converts the light of a first wavelength range—the light emitted by the active layer in the direction of the substrate—into light of a second wavelength range, with the result that, altogether, the light-emitting diode emits light of different wavelength ranges.

In many potential areas of application for light-emitting diodes, such as, for example, in display elements in motor vehicle dashboards, lighting in aircraft and automobiles, and in full-color LED displays, there is increasingly a demand for light-emitting diode arrangements with which polychromatic light, in particular white light, can be produced.

Japanese patent application JP-07 176 794-A describes a white-light-emitting, planar light source in which two blue-light-emitting diodes are arranged at an end of a transparent plate. The diodes emit light into the transparent plate. The transparent plate is coated with a fluorescent substance on one of the two mutually opposite main surfaces. The fluorescent substance emits light when it is excited by the blue light of the diodes. The light emitted by the fluorescent substance has a different wavelength from that of the blue light emitted by the diodes. In that prior art component, it is particularly difficult to apply the fluorescent substance in such a manner that the light source radiates homogeneous white light. Furthermore, the question of reproducibility in mass production also poses major problems because even slight fluctuations in the thickness of the fluorescent layer, for example on account of unevenness of the surface of the transparent plate, cause a change in the shade of white of the radiated light.

SUMMARY OF THE INVENTION

It is accordingly an object of the invention to provide a light-radiating semiconductor component, which overcomes the above-mentioned disadvantages of the heretofore-known devices and methods of this general type and which radiates homogeneous polychromatic light and ensures technically simple mass production with component characteristics that are reproducible to the greatest possible extent.

With the foregoing and other objects in view there is provided, in accordance with the invention, a light-radiating semiconductor component, comprising:

- a semiconductor body emitting electromagnetic radiation during an operation of the semiconductor component, the semiconductor body having a semiconductor layer sequence suitable for emitting electromagnetic radiation of a first wavelength range selected from a spectral region consisting of ultraviolet, blue, and green;
- a first electrical terminal and a second electrical terminal each electrically conductively connected to the semiconductor body; and
- a luminescence conversion element with at least one luminescent material, the luminescence conversion element converting a radiation originating in the first wavelength range into radiation of a second wavelength range different from the first wavelength range, such that the semiconductor component emits polychromatic radiation comprising radiation of the first wavelength range and radiation of the second wavelength range.

The invention provides for the radiation-emitting semiconductor body to have a layer sequence, in particular a layer sequence with an active semiconductor layer made of $Ga_xIn_{1-x}N$ or $Ga_xAl_{1-x}N$, which emits an electromagnetic radiation of a first wavelength range from the ultraviolet, blue and/or green spectral region during operation of the semiconductor component. The luminescence conversion element converts part of the radiation originating from the first wavelength range into radiation of a second wavelength range, in such a way that the semiconductor component emits polychromatic radiation, in particular polychromatic light, comprising radiation of the first wavelength range and radiation of the second wavelength range. This means, for example, that the luminescence conversion element spectrally selectively absorbs part of the radiation emitted by the semiconductor body, preferably only over a spectral subregion of the first wavelength range, and emits it in the region of longer wavelength (in the second wavelength range). Preferably, the radiation emitted by the semiconductor body

has a relative intensity maximum at a wavelength $\lambda \leqq 520$ nm and the wavelength range which is spectrally selectively absorbed by the luminescence conversion element lies outside this intensity maximum.

In accordance with an added feature of the invention, the luminescence conversion element converts radiation of the first wavelength range into radiation of a plurality of second wavelength ranges from mutually different spectral subregions, such that the semiconductor component emits polychromatic radiation comprising radiation of the first wavelength range and radiation of the plurality of second wavelength ranges. In other words, the invention advantageously makes it possible also to convert a number (one or more) of first spectral subregions originating from the first wavelength range into a plurality of second wavelength ranges. As a result, it is possible to produce diverse color mixtures and color temperatures.

The semiconductor component according to the invention has the particular advantage that the wavelength spectrum generated by way of luminescence conversion and hence the color of the radiated light do not depend on the level of the operating current intensity through the semiconductor body. This has great significance particularly when the ambient temperature of the semiconductor component and, consequently, as is known, also the operating current intensity greatly fluctuate. Especially light-emitting diodes having a semiconductor body based on GaN are very sensitive in this respect.

In addition, the semiconductor component according to the invention requires only a single driving voltage and, as a result, also only a single driving circuit configuration, whereby the outlay on devices for the driving circuit of the semiconductor component can be kept very low.

In accordance with an additional feature of the invention, the semiconductor component has a defined main radiating direction, and the luminescence conversion element is disposed substantially downstream of the semiconductor body in the main radiating direction of the semiconductor component.

In accordance with another feature of the invention, the luminescence conversion element is at least one luminescence conversion layer disposed in a vicinity of the semiconductor body. In this particularly preferred embodiment of the invention, a partially transparent luminescence conversion layer, that is to say one which is partially transparent to the radiation emitted by the radiation-emitting semiconductor body, is provided as the luminescence conversion element above or on the semiconductor body. In order to ensure a uniform color of the radiated light, the luminescence conversion layer is advantageously designed in such a way that it has a constant thickness throughout. This has the particular advantage that the path length of the light radiated by the semiconductor body through the luminescence conversion layer is virtually constant for all radiation directions. The effect that can be achieved as a result of this is that the semiconductor component radiates light of the same color in all directions. A further particular advantage of a semiconductor component according to the invention in accordance with this development consists in the fact that a high degree of reproducibility can be obtained in a simple manner, which is of considerable significance for efficient mass production. A resist or resin layer treated with luminescent material may be provided, for example, as the luminescence conversion layer.

In accordance with a further feature of the invention, the luminescence conversion element is a luminescence conversion encapsulation enclosing at least a part of the semiconductor body and partial regions of the first and second electrical terminals. The encapsulation is partially transparent and encloses at least part of the semiconductor body (and possibly partial regions of the electrical terminals) and can simultaneously be utilized as component encapsulation (housing). The advantage of a semiconductor component in accordance with this embodiment consists essentially in the fact that conventional production lines used for the production of conventional light-emitting diodes (for example radial light-emitting diodes) can be utilized for its production. The material of the luminescence conversion encapsulation is used for the component encapsulation instead of the transparent plastic which is used for this purpose in conventional light-emitting diodes.

In further advantageous embodiments of the semiconductor component according to the invention and of the two preferred embodiments mentioned above, the luminescence conversion layer or the luminescence conversion encapsulation is composed of a transparent material, for example plastic, preferably epoxy resin, which is provided with at least one luminescent material (examples of preferred plastics and luminescent materials will be found further below). In this way, it is possible to produce luminescence conversion elements in a particularly cost-effective manner. Specifically, the requisite process steps can be integrated in conventional production lines for light-emitting diodes with no major outlay.

In accordance with again an added feature of the invention, the second wavelength range includes wavelengths at least some of which are longer than wavelengths of the first wavelength range.

In accordance with again an additional feature of the invention, the semiconductor body is adapted to emit ultraviolet radiation during operation of the semiconductor component, and the luminescence conversion element converts at least a portion of the ultraviolet radiation into visible light.

In accordance with again another feature of the invention, the first wavelength range and the second wavelength range of the polychromatic radiation lie at least partially in mutually complementary-color spectral regions, and a combination of radiation from the first and second wavelength range results in white light.

When the second spectral subregion of the first wavelength range and a second wavelength range are complementary to one another, it is possible to produce polychromatic, in particular white, light from a single colored light source, in particular a light-emitting diode having a single blue-light-radiating semiconductor body. In order, for example, to produce white light with a blue-light-emitting semiconductor body, part of the radiation from the blue spectral region emitted by the semiconductor body is converted into the yellow spectral region, which is complementarily colored with respect to blue. The color temperature or color locus of the white light can in this case be varied by a suitable choice of the luminescence conversion element, in particular by a suitable choice of the luminescent material, its particle size and its concentration. Furthermore, these arrangements also advantageously afford the possibility of using luminescent material mixtures, as a result of which, advantageously, the desired hue can be set very accurately. Likewise, it is possible to configure luminescence conversion elements inhomogeneously, for example by means of inhomogeneous luminescent material distribution. Different path lengths of the light through the luminescence conversion element can advantageously be compensated for as a result of this.

In accordance with again a further feature of the invention, the first wavelength range emitted by the semiconductor body and two second wavelength ranges produce an additive color triad, such that white light is radiated by the semiconductor component during operation thereof.

In a further preferred embodiment of the semiconductor component according to the invention, the luminescence conversion element or another constituent of a component encapsulation has, for the purpose of color matching, one or more dyes which do not effect wavelength conversion. For this purpose, it is possible to use the dyes which are used for the production of conventional light-emitting diodes, such as, for example, azo, anthraquinone or perinone dyes.

In order to protect the luminescence conversion element against an excessively high radiation load, in an advantageous development or in the above-mentioned preferred embodiments of the semiconductor component according to the invention, at least part of the surface of the semiconductor body is surrounded by a first, transparent casing composed, for example, of a plastic, on which casing the luminescence conversion layer is applied. This reduces the radiation density in the luminescence conversion element and, consequently, the radiation load thereof, which, depending on the materials used, has a positive effect on the life of the luminescence conversion element.

In accordance with yet an added feature of the invention, the radiation emitted by the semiconductor body has a luminescence intensity maximum in a blue spectral region at a wavelength selected from the group consisting of λ=430 nm and λ=450 nm. The preferred radiation-emitting semiconductor body has a radiation spectrum with an intensity maximum at a wavelength of between 420 nm and 460 nm, in particular at 430 nm (for example semiconductor body based on $Ga_xAl_{1-x}N$) or 450 nm (for example semiconductor body based on $Ga_xIn_{1-x}N$). It is advantageous that virtually all colors and mixed colors of the C.I.E. chromaticity diagram can be produced by such a semiconductor component according to the invention. In this case, as specified above, the radiation-emitting semiconductor body may essentially be composed of electroluminescent semiconductor material, but also of a different electroluminescent material, such as polymer material, for example.

In accordance with yet an additional feature of the invention, an opaque base housing is formed with a recess, and wherein the semiconductor body is disposed in the recess of the base housing, and including a covering layer having a luminescence conversion layer on the recess. Alternatively, the recess is at least partially filled with the luminescence conversion element.

In accordance with yet another feature of the invention, the luminescence conversion element comprises a plurality of layers with mutually different wavelength conversion properties.

In accordance with yet a further feature of the invention, the luminescence conversion element includes organic dye molecules in a plastic matrix, such as in a matrix of silicone, thermoplastic material, or thermosetting plastic material. The luminescence conversion element may also have organic dye molecules in an epoxy resin matrix or a polymethyl methacrylate matrix.

In accordance with yet again an added feature of the invention, the luminescence conversion element has at least one inorganic luminescence material selected from the group of phosphors. The inorganic luminescent material is preferably from the group of Ce-doped garnets, such as YAG:Ce.

In accordance with yet again an additional feature of the invention, the inorganic luminescent material is embedded in an epoxy resin matrix. It may also be embedded in a matrix formed of inorganic glass with a relatively low melting point.

Preferably, the inorganic luminescent material has a mean particle size of approximately 10 μm.

In accordance with yet again another feature of the invention, the luminescence conversion element is provided with a plurality of mutually different materials selected from the group consisting of organic and inorganic luminescent materials. The luminescence conversion element may include organic or inorganic dye molecules partly with and partly without a wavelength conversion effect.

In accordance with yet again a further feature of the invention, the luminescence conversion element includes light-diffusing particles. The component may also have a transparent encapsulation with light-diffusing particles.

In accordance with again an added feature of the invention, the luminescence conversion element comprises at least one luminescent 4f-organometallic compound.

A blue output radiation is obtained if, in accordance with the invention, the luminescence conversion element includes a luminescent material that is luminescent in a blue region. The encapsulation may thereby be transparent with a blue luminescent material.

As noted, the luminescence conversion encapsulation or the luminescence conversion layer may be produced from a resist or from a plastic, for example from a silicone, thermoplastic or thermosetting plastic material (epoxy and acrylate resins) used for the encapsulation of optoelectronic components. Furthermore, covering elements fabricated from thermoplastic materials, for example, can be used as the luminescence conversion encapsulation. All the above-mentioned materials can be treated with one or more luminescent materials in a simple manner.

A semiconductor component according to the invention can be realized in a particularly simple manner when the semiconductor body is arranged in a recess in an optionally prefabricated housing and the recess is provided with a covering element having the luminescence conversion layer. A semiconductor component of this type can be produced in large numbers in conventional production lines. For this purpose, all that is necessary, after the mounting of the semiconductor body in the housing, is to apply the covering element, for example a resist or casting resin layer or a prefabricated covering plate made of thermoplastic material, to the housing. Optionally, the recess in the housing may be filled with a transparent material, for example a transparent plastic, which does not alter in particular the wavelength of the light emitted by the semiconductor body or, however, if desired, may already be designed such that it effects luminescence conversion.

In a development of the semiconductor component according to the invention which is particularly preferred on account of the fact that it can be realized in a particularly simple manner, the semiconductor body is arranged in a recess in a housing which is optionally prefabricated and may already be provided with a lead frame and the recess is filled with an at least partially transparent casting resin, to which the luminescent material has already been added prior to the recess being sealed by casting. In this case, the luminescence conversion element is consequently provided by the potting of the semiconductor body that is provided with luminescent material.

A particularly preferred material for the production of the luminescence conversion element is epoxy resin, to which

one or more luminescent materials are added. However, it is also possible to use polymethyl methacrylate (PMMA) instead of epoxy resin.

PMMA can be treated with organic dye molecules in a simple manner. Perylene-based dye molecules, for example, can be used to produce green-, yellow- and red-light-emitting semiconductor components according to the invention. Semiconductor components which emit light in the UV, visible or infrared region can also be produced by admixture of 4f-organometallic compounds. In particular, red-light-emitting semiconductor components according to the invention can be realized for example by admixture of Eu^{3+}-based organometallic chelates ($\lambda \approx 620$ nm). Infrared-radiating semiconductor components according to the invention, in particular having blue-light-emitting semiconductor bodies, can be produced by admixture of 4f-chelates or of Ti^{3+}-doped sapphire.

A white-light-radiating semiconductor component according to the invention can advantageously be produced by choosing the luminescent material such that a blue radiation emitted by the semiconductor body is converted into complementary wavelength ranges, in particular blue and yellow, or to form additive color triads, for example blue, green and red. In this case, the yellow or the green and red light is produced by means of the luminescent materials. The hue (color locus in the CIE chromaticity diagram) of the white light thereby produced can in this case be varied by a suitable choice of the dye/s in respect of mixture and concentration.

Suitable organic luminescent materials for a white-light-radiating semiconductor component according to the invention are perylene luminescent materials, such as, for example, BASF Lumogen F 083 for green luminescence, BASF Lumogen F 240 for yellow luminescence and BASF Lumogen F 300 for red luminescence. These dyes can be added to transparent epoxy resin, for example, in a simple manner.

A preferred method for producing a green-light-emitting semiconductor component using a blue-light-radiating semiconductor body consists in using UO_2^{++}-substituted borosilicate glass for the luminescence conversion element.

In a further preferred development of a semiconductor component according to the invention and of the advantageous embodiments specified above, light-diffusing particles, so-called diffusers, are additionally added to the luminescence conversion element or to another radiation-transmissive component of the component encapsulation. The color perception and the radiation characteristics of the semiconductor component can advantageously be optimized by this means.

In a particularly advantageous embodiment of the semiconductor component according to the invention, the luminescence conversion element is at least partially composed of a transparent epoxy resin provided with an inorganic luminescent material. Specifically, it is advantageous that inorganic luminescent materials can be bound in epoxy resin in a simple manner. A particularly preferred inorganic luminescent material for the production of white-light-emitting semiconductor components according to the invention is the phosphor YAG:Ce ($Y_3Al_5O_{12}:Ce^{3+}$). The latter can be mixed in a particularly simple manner in transparent epoxy resins which are conventionally used in LED technology. Other conceivable luminescent materials are further garnets doped with rare earths, such as, for example, $Y_3Ga_5O_{12}:Ce^{3+}$, $Y(Al,Ga)_5O_{12}:Ce^{3+}$ and $Y(Al,Ga)_5O_{12}:Tb^{3+}$, as well as alkaline earth metal sulfides doped with rare earths, such as, for example, $SrS:Ce^{3+}$, Na, $SrS:Ce^{3+}$, Cl, $Srs:CeCl_3$, $CaS:Ce^{3+}$ and $SrSe:Ce^{3+}$. Furthermore, the thiogallates doped with rare earths, such as, for example, $CaGa_2S_4:Ce^{3+}$ and $SrGa_2S_4:Ce^{3+}$, are particularly suitable for the purpose of producing differently polychromatic light. The use of aluminates doped with rare earths, such as, for example, $YAlO_3:Ce^{3+}$, $YGaO_3:Ce^{3+}$, $Y(Al,Ga)O_3:Ce^{3+}$, and orthosilicates $M_2SiO_5:Ce^{3+}$ (M:Sc, Y, Sc) doped with rare earths, such as, for example, $Y_2SiO_5:Ce^{3+}$, is likewise conceivable for this purpose. In all of the yttrium compounds, the yttrium can, in principle, also be replaced by scandium or lanthanum.

In a further possible embodiment of the semiconductor component according to the invention, at least all those components of the encapsulation through which light is radiated, that is to say including the luminescence conversion encapsulation or layer, are composed of purely inorganic materials. Consequently, the luminescence conversion element is composed of an inorganic luminescent material which is embedded in a thermally stable, transparent or partially transparent inorganic material. In particular, the luminescence conversion element is composed of an inorganic phosphor, which is embedded in an inorganic glass advantageously of low melting point (for example silicate glass). A preferred procedure for producing a luminescence conversion layer of this type is the sol gel technique, by means of which the entire luminescence conversion layer, that is to say both the inorganic luminescent material and the embedding material, can be produced in one work operation.

In order to improve the thorough mixing of the radiation of the first wavelength range that is emitted by the semiconductor body with the luminescence-converted radiation of the second wavelength range and hence the color homogeneity of the radiated light, in an advantageous refinement of the semiconductor component according to the invention, a dye which emits light in the blue region is additionally added to the luminescence encapsulation or the luminescence conversion layer and/or to another component of the component encapsulation, which dye attenuates a so-called directional characteristic of the radiation radiated by the semiconductor body. Directional characteristic is to be understood to mean that the radiation emitted by the semiconductor body has a preferred radiation direction.

In a preferred refinement of the semiconductor component according to the invention, the inorganic luminescent material is used in powder form for the above-mentioned purpose of thorough mixing of the emitted radiation, the luminescent material particles not dissolving in the substance (matrix) encapsulating them. In addition, the inorganic luminescent material and the substance encapsulating it have mutually different refractive indices. This advantageously leads to a portion of the light which is not absorbed by the luminescent material being scattered, in a manner dependent on the particle size of the luminescent material. The directional characteristic of the radiation radiated by the semiconductor body is thereby efficiently attenuated, with the result that the unabsorbed radiation and the luminescence-converted radiation are homogeneously mixed, which leads to a spatially homogeneous color perception.

A white-light-radiating semiconductor component according to the invention can particularly preferably be realized by admixing the inorganic luminescent material YAG:Ce ($Y_3Al_5O_{12}:Ce^{3+}$) with an epoxy resin used to produce the luminescence conversion encapsulation or layer. Part of a blue radiation emitted by the semiconductor body is shifted by the inorganic luminescent material $Y_3Al_5O_{12}:Ce^{3+}$ into the yellow spectral region and, consequently, into a wavelength range which is complementarily colored with

respect to the color blue. The hue (color locus) in the CIE chromaticity diagram) of the white light can in this case be varied by a suitable choice of the dye mixture and concentration.

The inorganic luminescent material YAG:Ce has, inter alia, the particular advantage that insoluble coloring pigments (particle size in the region of 10 mm) having a refractive index of approximately 1.84 are involved in this case. Consequently, not only does the wavelength conversion occur but also a scattering effect which leads to good mixing together of blue diode radiation and yellow converter radiation.

In a further preferred development of a semiconductor component according to the invention and of the advantageous embodiments specified above, light-diffusing particles, so-called diffusers, are additionally added to the luminescence conversion element or to another radiation-transmissive component of the component encapsulation. The color perception and the radiation characteristic of the semiconductor component can advantageously be further improved by this means.

It is particularly advantageous that the luminous efficiency of white-light-emitting semiconductor components according to the invention and their above-mentioned embodiments having a blue-light-emitting semiconductor body produced essentially on the basis of GaN is comparable with the luminous efficiency of an incandescent bulb. The reason for this is that, on the one hand, the external quantum efficiency of such semiconductor bodies is a few percent and, on the other hand, the luminescence efficiency of organic dye molecules is often established at more than 90%. Furthermore, the semiconductor component according to the invention is distinguished by an extremely long life, greater robustness and a smaller operating voltage in comparison with the incandescent bulb.

It is advantageous, moreover, that the luminosity of the semiconductor component according to the invention that is perceptible to the human eye can be distinctly increased by comparison with a semiconductor component which is not equipped with the luminescence conversion element but is otherwise identical, since the sensitivity of the eye increases in the direction of a higher wavelength.

Furthermore, the principle according to the invention can advantageously be used also to convert an ultraviolet radiation which is emitted by the semiconductor body in addition to the visible radiation into visible light. The luminosity of the light emitted by the semiconductor body is thereby distinctly increased.

The concept, presented here, of luminescence conversion with blue light from a semiconductor body can advantageously be extended to multistage luminescence conversion elements as well, in accordance with the scheme ultraviolet→blue→green→yellow→red. In this case, a plurality of spectrally selectively emitting luminescence conversion elements are arranged one after the other relative to the semiconductor body.

Likewise, it is advantageously possible for a plurality of differently spectrally selectively emitting dye molecules to be jointly embedded in a transparent plastic of a luminescence conversion element. A very broad color spectrum can be produced by this means.

A particular advantage of white-light-radiating semiconductor components according to the invention in which YAG:Ce, in particular, is used as the luminescence conversion dye consists in the fact that this luminescent material, upon excitation by blue light, effects a spectral shift of approximately 100 nm between absorption and emission. This leads to a significant reduction in the reabsorption of the light emitted by the luminescent material and hence to a higher luminous efficiency. In addition, YAG:Ce advantageously has high thermal and photochemical (for example UV) stability (significantly higher than organic luminescent materials), with the result that it is even possible to produce white-light-emitting diodes for outdoor use and/or high temperature ranges.

YAG:Ce has, to date, proved to be the best-suited luminescent material in respect of reabsorption, luminous efficiency, thermal and photochemical stability and processability. However, the use of other Ce-doped phosphors is also conceivable, in particular of Ce-doped garnets.

In a particularly advantageous manner, semiconductor components according to the invention can be used, in particular on account of their low power consumption, in full-color LED displays for the lighting of motor vehicle interiors or of aircraft cabins as well as for the illumination of display devices such as motor vehicle dashboards or liquid crystal displays.

Other features which are considered as characteristic for the invention are set forth in the appended claims.

Although the invention is illustrated and described herein as embodied in a light-radiating semiconductor component having a luminescence conversion element, it is nevertheless not intended to be limited to the details shown, since various modifications and structural changes may be made therein without departing from the spirit of the invention and within the scope and range of equivalents of the claims.

The construction and method of operation of the invention, however, together with additional objects and advantages thereof will be best understood from the following description of specific embodiments when read in connection with the accompanying drawings.

BRIEF DESCRIPTION OF THE DRAWINGS

FIG. **1** is a diagrammatic sectional side view of a first exemplary embodiment of a semiconductor component according to the invention;

FIG. **2** is a diagrammatic sectional side view of a second exemplary embodiment of the semiconductor component according to the invention;

FIG. **3** is a diagrammatic sectional side view of a third exemplary embodiment of the semiconductor component according to the invention;

FIG. **4** is a diagrammatic sectional side view of a fourth exemplary embodiment of the semiconductor component according to the invention;

FIG. **5** is a diagrammatic sectional side view of a fifth exemplary embodiment of the semiconductor component according to the invention;

FIG. **6** is a diagrammatic sectional side view of a sixth exemplary embodiment of the semiconductor component according to the invention;

FIG. **7** is a graph of an emission spectrum of a blue-light-radiating semiconductor body with a layer sequence based on GaN;

FIG. **8** is a graph of the emission spectra of two semiconductor components according to the invention which radiate white light;

FIG. **9** is a diagrammatic sectional view taken through a semiconductor body which emits blue light;

FIG. **10** is a diagrammatic sectional side view of a seventh exemplary embodiment of the semiconductor component according to the invention;

FIG. **11** is a graph of an emission spectrum of a semiconductor component according to the invention which radiates polychromatic red light;

FIG. **12** is a graph of the emission spectra of further semiconductor components according to the invention which radiate white light;

FIG. **13** is a diagrammatic sectional side view of an eighth exemplary embodiment of the semiconductor component according to the invention; and

FIG. **14** is a diagrammatic sectional side view of a ninth exemplary embodiment of the semiconductor component according to the invention.

DESCRIPTION OF THE PREFERRED EMBODIMENTS

Reference will now be had to the figures of the drawing in detail, in which identical or functionally identical parts are designated by the same reference symbols throughout, and first, particularly, to FIG. **1** thereof.

The light-emitting semiconductor component illustrated in FIG. **1**, a semiconductor body **1** has a back-side contact **11**, a front-side contact **12** and a layer sequence **7**, which is composed of a number of different layers and has at least one active zone which emits a radiation (for example ultraviolet, blue or green) during the operation of the semiconductor component.

An example of a suitable layer sequence **7** for this and for all of the exemplary embodiments described below is shown in FIG. **9**. There, a layer sequence made of an AlN or GaN layer **19**, an n-conducting GaN layer **20**, an n-conducting $Ga_xAl_{1-x}N$ or $Ga_xIn_{1-x}N$ layer **21**, a further n-conducting GaN or a $Ga_xIn_{1-x}N$ layer **22**, a p-conducting $Ga_xAl_{1-x}N$ layer or $Ga_xIn_{1-x}N$ layer **23** and a p-conducting GaN layer **24** is applied on a substrate **18** composed of SiC, for example. A respective contact metallization layer **27**, **28** is applied on a main surface **25** of the p-conducting GaN layer **24** and a main surface **26** of the substrate **18**, said contact metallization layer being composed of a material which is conventionally used for electrical contacts in opto-semiconductor technology.

However, it is also possible to use any other semiconductor body deemed to be suitable by those skilled in this art for the semiconductor component according to the invention. This likewise applies to all of the exemplary embodiments described below.

In the exemplary embodiment of FIG. **1**, the semiconductor body **1** is fixed by its back-side contact **11** on a first electrical terminal **2** by means of an electrically conductive bonding agent, for example a metallic solder of an adhesive. The front-side contact **12** is connected to a second electrical terminal **3** by means of a bonding wire **14**.

The free surfaces of the semiconductor body **1** and partial regions of the electrical terminals **2** and **3** are directly enclosed by a luminescence conversion encapsulation **5**. The latter is preferably composed of a transparent plastic (preferably epoxy resin or else polymethyl methacrylate) which can be used for transparent light-emitting diode encapsulations and is treated with luminescent material **6**, preferably inorganic luminescent material, for white-light-emitting components, preferably $Y_3Al_5O_{12}:Ce^{3+}$ (YAG:Ce).

The exemplary embodiment of a semiconductor component according to the invention which is illustrated in FIG. **2** differs from that of FIG. **1** by the fact that the semiconductor body **1** and partial regions of the electrical terminals **2** and **3** are enclosed by a transparent encapsulation **15** instead of by a luminescence conversion encapsulation. This transparent encapsulation **15** does not effect any wavelength change in the radiation emitted by the semiconductor body **1** and is composed, for example, of an epoxy, silicone or acrylate resin which is conventionally used in light-emitting diode technology, or of another suitable radiation-transmissive material, such as inorganic glass, for example.

A luminescence conversion layer **4** is applied to the transparent encapsulation **15** and, as illustrated in FIG. **2**, covers the entire surface of the encapsulation **15**. It is likewise conceivable for the luminescence conversion layer **4** to cover only a partial region of this surface. The luminescence conversion layer **4** is composed, for example, once again of a transparent plastic (for example epoxy resin, resist or polymethyl methacrylate) which is treated with a luminescent material **6**. In this case, too, YAG:Ce is preferably suitable as luminescent material for a white-light-emitting semiconductor component.

This exemplary embodiment has the particular advantage that the path length through the luminescence conversion element is approximately the same size for all of the radiation emitted by the semiconductor body. This is important particularly when, as is often the case, the exact hue of the light radiated by the semiconductor component depends on this path length.

For improved output coupling of the light from the luminescence conversion layer **4** of FIG. **2**, a covering **29** (depicted by a broken line) in the form of a lens can be provided on a side surface of the component, which covering reduces total reflection of the radiation within the luminescence conversion layer **4**. This covering **29** in the form of a lens may be composed of transparent plastic or glass and be bonded, for example, onto the luminescence conversion layer **4** or be designed directly as the component part of the luminescence conversion layer **4**.

In the exemplary embodiment illustrated in FIG. **3**, the first and second electrical terminals **2**, **3** are embedded in an opaque, possibly prefabricated base housing **8** having a recess **9**. "Prefabricated" is to be understood to mean that the base housing **8** is already preconstructed on the connections **2**, **3**, for example by means of injection molding, before the semiconductor body is mounted on to the connection **2**. The base housing **8** is composed for example of an opaque plastic and the recess **9** is designed, in respect of its shape, as a reflector **17** for the radiation emitted by the semiconductor body during operation (if appropriate by suitable coating of the inner walls of the recess **9**). Such base housings **8** are used in particular in the case of light-emitting diodes which can be surface-mounted on printed circuit boards. They are applied to a lead frame having the electrical terminals **2**, **3**, for example by means of injection molding, prior to the mounting of the semiconductor bodies.

The recess **9** is covered by a luminescence conversion layer **4**, for example a separately produced covering plate **17** made of plastic which is fixed on the base housing **8**. Suitable materials for the luminescence conversion layer **4** are once again, as mentioned further above in the general part of the description, the plastics or inorganic glass in conjunction with the luminescent materials mentioned there. The recess **9** may either be filled with a transparent plastic, with an inorganic glass or with gas or else be provided with a vacuum.

As in the case of the exemplary embodiment according to FIG. **2**, a covering **29** (depicted by a broken line) in the form of a lens can be provided on the luminescence conversion layer **4** in this case as well, for improved output coupling of the light from said luminescence conversion layer, which covering reduces total reflection of the radiation within the

luminescence conversion layer **4**. This covering **29** may be composed of transparent plastic and be bonded, for example, onto the luminescence conversion layer **4** or be designed integrally together with the luminescence conversion layer **4**.

In a particularly preferred embodiment, the recess **9** is filled, as shown in FIG. **10**, with an epoxy resin provided with luminescent material, that is to say with a luminescence encapsulation **5** which forms the luminescence conversion element. A covering plate **17** and/or a covering **29** in the form of a lens can then be omitted as well. Furthermore, as illustrated in FIG. **13**, the first electrical terminal **2** is optionally designed as a reflector well **34** for example by embossing in the region of the semiconductor body **1**, which reflector well is filled with a luminescence conversion encapsulation **5**.

In FIG. **4**, a so-called radial diode is illustrated as a further exemplary embodiment. In this case, the semiconductor body **1** is fixed in a part **16**, designed as a reflector, of the first electrical terminal **2** by means of soldering or bonding, for example. Such housing designs are known in light-emitting diode technology and, therefore, need not be explained in any further detail.

In the exemplary embodiment of FIG. **4**, the semiconductor body **1** is surrounded by a transparent encapsulation **15** which, as in the case of the second exemplary embodiment mentioned (FIG. **2**), does not effect any wavelength change in the radiation emitted by the semiconductor body **1** and may be composed, for example, of a transparent epoxy resin which is conventionally used in light-emitting diode technology or of organic glass.

A luminescence conversion layer **4** is applied on this transparent encapsulation **15**. Suitable materials for this are, for example, once again, as referred to in connection with the above-mentioned exemplary embodiments, the plastics or inorganic glass in conjunction with the dyes mentioned there.

The entire structure, comprising semiconductor body **1**, partial regions of the electrical terminals **2**, **3**, transparent encapsulation **15** and luminescence conversion layer **4**, is directly enclosed by a further transparent encapsulation **10**, which does not effect any wavelength change in the radiation which has passed through the luminescence conversion layer **4**. It is composed, for example, once again of a transparent epoxy resin which is conventionally used in light-emitting diode technology or of inorganic glass.

The exemplary embodiment shown in FIG. **5** differs from that of FIG. **4** essentially by the fact that the free surfaces of the semiconductor body **1** are directly covered by a luminescence conversion encapsulation **5**, which is again surrounded by a further transparent encapsulation **10**. FIG. **5** illustrates, moreover, by way of example, a semiconductor body **1** in which, instead of the underside contacts, a further contact is provided on the semiconductor layer sequence **7**, which further contact is connected to the associated electrical terminal **2** or **3** by means of a second bonding wire **14**. It goes without saying that such semiconductor bodies **1** can also be used in all the other exemplary embodiments described herein. Conversely, of course, a semiconductor body **1** in accordance with the above-mentioned exemplary embodiments can also be used in the exemplary embodiment of FIG. **5**.

For the sake of completeness, let it be noted at this point that an integral luminescence conversion encapsulation **5**, which then replaces the combination of luminescence conversion encapsulation **5** and further transparent encapsulation **10**, can, of course, also be used in the design according to FIG. **5** in an analogous manner to the exemplary embodiment according to FIG. **1**.

In the case of the exemplary embodiment of FIG. **6**, a luminescence conversion layer **4** (possible materials as specified above) is applied directly to the semiconductor body **1**. The latter and partial regions of the electrical terminals **2**, **3** are enclosed by a further transparent encapsulation **10**, which does not effect any wavelength change in the radiation which has passed through the luminescence conversion layer **4**, and is fabricated for example from a transparent epoxy resin which can be used in light-emitting diode technology or from glass.

Such semiconductor bodies **1** provided with a luminescence conversion layer **4** and not having an encapsulation can, of course, advantageously be used in all housing designs known from light-emitting diode technology (for example SMD housings, radial housings (cf. FIG. **5**)).

In the case of the exemplary embodiment of a semiconductor component according to the invention which is illustrated in FIG. **14**, a transparent well part **35** is arranged on the semiconductor body **1** and has a well **36** above the semiconductor body **1**. The well part **35** is composed for example of transparent epoxy resin or of inorganic glass and is fabricated for example by means of injection-molding encapsulation of the electrical terminals **2**, **3** including semiconductor body **1**. Arranged in this well **36** is a luminescence conversion layer **4**, which, for example, is once again fabricated from epoxy resin or inorganic glass in which are bound particles **37**, composed of one of the above-mentioned inorganic luminescent materials. In the case of this design, it is advantageously ensured in a very simple manner that the luminescent material accumulates at unintended locations, for example next to the semiconductor body, during the production of the semiconductor component. Of course, the well part **35** can also be produced separately and be fixed in a different way, for example on a housing part, above the semiconductor body **1**.

In all of the exemplary embodiments described above, it is possible, in order to optimize the color perception of the radiated light and also in order to adapt the radiation characteristic, for the luminescence conversion element (luminescence conversion encapsulation **5** or luminescence conversion layer **4**), if appropriate the transparent encapsulation **15**, and/or if appropriate the further transparent encapsulation **10** to have light-diffusing particles, advantageously so-called diffusers. Examples of such diffusers are mineral fillers, in particular CaF_2, TiO_2, SiO_2, $CaCO_3$ or $BaSO_4$ or else organic pigments. These materials can be added in a simple manner to the above-mentioned plastics.

FIGS. **7**, **8** and **12** respectively show emission spectra of a blue-light-radiating semiconductor body (FIG. **7**) (luminescence maximum at $\lambda \approx 430$ nm) and of white-light-emitting semiconductor components according to the invention which are produced by means of such a semiconductor body (FIGS. **8** and **12**). The wavelength l in nm is plotted in each case on the abscissa and a relative electroluminescence (EL) intensity is in each case plotted on the ordinate.

Only part of the radiation emitted by the semiconductor body according to FIG. **7** is converted into a wavelength range of longer wavelength, with the result that white light is produced as mixed color. The dashed line **30** in FIG. **8** represents an emission spectrum of a semiconductor component according to the invention which emits radiation from two complementary wavelength ranges (blue and yellow) and hence white light overall. In this case, the emission spectrum has a respective maximum at wavelengths of

between approximately 400 and approximately 430 nm (blue) and of between approximately 550 and approximately 580 nm (yellow). The solid line **31** represents the emission spectrum of a semiconductor component according to the invention which mixes the color white from three wavelength ranges (additive color triad formed from blue, green and red). In this case, the emission spectrum has a respective maximum for example at the wavelengths of approximately 430 nm (blue), approximately 500 nm (green) and approximately 615 nm (red).

Furthermore, FIG. **11** illustrates an emission spectrum of a semiconductor component according to the invention which radiates polychromatic light comprising blue light (maximum at a wavelength of approximately 470 nm) and red light (maximum at a wavelength of approximately 620 nm). The overall color perception of the radiated light for the human eye is magenta. The emission spectrum radiated by the semiconductor body in this case corresponds once again to that of FIG. **7**.

FIG. **12** shows a white-light-emitting semiconductor component according to the invention which is provided with a semiconductor body emitting an emission spectrum in accordance with FIG. **7** and in which YAG:Ce is used as the luminescence material. Only part of the radiation emitted by the semiconductor body in accordance with FIG. **7** is converted into a wavelength range of longer wavelength, with the result that white light is produced as the mixed color. The differently dashed lines **30** to **33** of FIG. **12** represent emission spectra of semiconductor components according to the invention in which the luminescence conversion element, in this case a luminescence conversion encapsulation made of epoxy resin, has different YAG:Ce concentrations. Each emission spectrum has a respective intensity maximum between λ=420 nm and λ=430 nm, that is to say in the blue spectral region and between λ=520 nm and λ=545 nm, that is to say in the green spectral region, the emission bands having the longer-wavelength intensity maximum largely lying in the yellow spectral region. The diagram of FIG. **12** makes it clear that in the semiconductor component according to the invention, the CIE color locus of the white light can be altered in a simple manner by alteration of the luminescent material concentration in the epoxy resin.

Furthermore, it is possible to apply inorganic luminescent materials based on Ce-doped garnets, thiogallates, alkaline earth metal sulfides and aluminates directly to the semiconductor body, without dispersing them in epoxy resin or glass.

A further particular advantage of the above-mentioned inorganic luminescent materials results from the fact that, unlike in the case of organic dyes, the luminescent material concentration e.g. in the epoxy resin is not limited by the solubility. As a result, large thicknesses of luminescence conversion elements are not necessary.

The explanation of the semiconductor component according to the invention using the exemplary embodiments described above ought not, of course, to be regarded as a restriction of the invention thereto. For example, a polymer LED emitting a corresponding radiation spectrum may also be understood as semiconductor body, such as, for example, light-emitting diode chips or laser diode chips.

We claim:

1. A light-radiating semiconductor component, comprising:

a semiconductor body configured to emit at least one of ultraviolet, blue, and green light; and

a luminescence conversion element comprising at least one luminescent material, the luminescence conversion element configured to convert some of the light emitted from the semiconductor body to a different color, the remaining light emitted from the semiconductor body combining with the converted light to produce a light output for the semiconductor component having a mixture of colors,

wherein the luminescence conversion element is structured to cause the mixture of colors in the light output to be substantially homogeneous for different radiation directions.

2. The component of claim **1**, wherein the mixture of colors is substantially the same for all radiation directions.

3. The component of claim **1**, wherein the substantially homogeneous mixture of colors creates a spatially substantially homogeneous color perception for the light output of the semiconductor component.

4. The component of claim **1**, wherein the luminescence conversion element has a substantially constant thickness to produce the substantially homogeneous mixture of colors.

5. The component of claim **1**, wherein a path length through the luminescence conversion element for the light emitted by the same conductor body is substantially constant for all radiation directions.

6. The component of claim **1**, wherein the luminescent material is a powder.

7. The component of claim **6**, wherein the powder comprises particles sized to scatter unconverted light from the semiconductor body.

8. The component of claim **1**, wherein the luminescence conversion element further comprises light-diffusing particles.

9. The component of claim **1**, wherein the luminescence conversion element further compnses an encapsulation material supporting the luminescent material.

10. The component of claim **9**, wherein the encapsulation material comprises epoxy resin.

11. The component of claim **9**, wherein the encapsulation material comprises silicone.

12. The component of claim **1**, wherein the luminescent material is an inorganic material.

13. The component of claim **12**, wherein the luminescent material is a cerium-doped garnet.

14. The component of claim **12**, wherein the luminescent material is an yttrium aluminum garnet.

15. A light-radiating semiconductor component, comprising:

a semiconductor body configured to emit at least one of ultraviolet, blue, and green light; and

a luminescence conversion element comprising at least one luminescent material, the luminescence conversion element configured to convert some of the light emitted from the semiconductor body to a different color, the remaining light emitted from the semiconductor body combining with the converted light to produce a light output for the semiconductor component having a mixture of colors,

wherein the luminescence conversion element is structured to cause the mixture of colors in the light output to be substantially homogeneous for different radiation directions,

wherein the luminescent material is applied directly to the semiconductor body.

16. The component of claim **1**, wherein the mixture of colors produce white.

17. The component of claim **16**, wherein the semiconductor body is configured to emit blue light.

18. The component of claim **17**, wherein the luminescent conversion element converts blue light to yellow light.

19. The component of claim 1, further comprising a housing having a recess, wherein the semiconductor body is positioned in the recess.

20. A light-radiating semiconductor component, comprising:

a semiconductor body configured to emit at least one of ultraviolet, blue, and green light; and

means for converting some of the light emitted from the semiconductor body to a different color so that the remaining light emitted from the semiconductor body combines with the converted light to produce a light output for the semiconductor component having a mixture of colors that is substantially homogeneous for different radiation directions.

21. The component of claim 20, wherein the mixture of colors is substantially the same for all radiation directions.

22. The component of claim 20, wherein the substantially homogeneous mixture of colors creates a spatially substantially homogeneous color perception for the light output of the semiconductor component.

23. The component of claim 20, wherein the mixture of colors produce white.

24. The component of claim 23, wherein the semiconductor body is configured to emit blue light.

25. The component of claim 1, further comprising a housing having a recess, wherein the semiconductor body is positioned in the recess.

26. A light-radiating semiconductor component, comprising:

a semiconductor body configured to emit at least one of ultraviolet, blue, and green light; and

a luminescence conversion element comprising at least one luminescent material, the luminescence conversion element configured to convert some of the light emitted from the semiconductor body to a different color, the remaining light emitted from the semiconductor body combining with the converted light to produce a white light output for the semiconductor component having a mixture of colors,

wherein the white light output is substantially homogeneous for different radiation directions.

27. Apparatus comprising:

a display device; and

one or more light-radiating semiconductor components as claimed in claim 1 disposed to illuminate the display device.

28. The apparatus of claim 27, further comprising a plurality of light-radiating semiconductor components as claimed in claim 1 disposed to illuminate the display device.

29. The apparatus of claim 27, wherein the display device is a liquid crystal display device.

30. The apparatus of claim 28, wherein the display device is a liquid crystal display device.

31. Apparatus comprising:

a display device; and

one or more light-radiating semiconductor components as claimed in claim 20 disposed to illuminate the display device.

32. The apparatus of claim 31, further comprising a plurality of light-radiating semiconductor components as claimed in claim 20 disposed to illuminate the display device.

33. The apparatus of claim 31, wherein the display device is a liquid crystal display device.

34. The apparatus of claim 32, wherein the display device is a liquid crystal display device.

35. Apparatus comprising:

a display device; and

one or more light-radiating semiconductor components as claimed in claim 26 disposed to illuminate the display device.

36. The apparatus of claim 35, further comprising a plurality of light-radiating semiconductor components as claimed in claim 26 disposed to illuminate the display device.

37. The apparatus of claim 35, wherein the display device is a liquid crystal display device.

38. The apparatus of claim 36, wherein the display device is a liquid crystal display device.

* * * * *

JS 44 (Rev. 11/04)

CIVIL COVER SHEET

The JS 44 civil cover sheet and the information contained herein neither replace nor supplement the filing and service of pleadings or other papers as required by law, except as provided by local rules of court. This form, approved by the Judicial Conference of the United States in September 1974, is required for the use of the Clerk of Court for the purpose of initiating the civil docket sheet. (SEE INSTRUCTIONS ON THE REVERSE OF THE FORM.)

I. (a) PLAINTIFFS
OSRAM GMBH and

OSRAM OPTO SEMICONDUCTORS GMBH

(b) County of Residence of First Listed Plaintiff _____
(EXCEPT IN U.S. PLAINTIFF CASES)

(c) Attorney's (Firm Name, Address, and Telephone Number)
William J. Marsden, Jr., FISH & RICHARDSON P.C.,
919 N. Market St., Ste. 1100, P. O. Box 1114,
Wilmington, DE 19899-1114

DEFENDANTS
CITIZEN WATCH CO., LTD.,

CITIZEN ELECTRONICS CO., LTD., CECOL, INC.

County of Residence of First Listed Defendant _____
(IN U.S. PLAINTIFF CASES ONLY)

NOTE: IN LAND CONDEMNATION CASES, USE THE LOCATION OF THE LAND INVOLVED.

Attorneys (If Known)

II. BASIS OF JURISDICTION (Place an "X" in One Box Only)

- ☐ 1 U.S. Government Plaintiff
- ☒ 3 Federal Question (U.S. Government Not a Party)
- ☐ 2 U.S. Government Defendant
- ☐ 4 Diversity (Indicate Citizenship of Parties in Item III)

III. CITIZENSHIP OF PRINCIPAL PARTIES (Place an "X" in One Box for Plaintiff and One Box for Defendant)
(For Diversity Cases Only)

	PTF	DEF		PTF	DEF
Citizen of This State	☐ 1	☐ 1	Incorporated *or* Principal Place of Business In This State	☐ 4	☐ 4
Citizen of Another State	☐ 2	☐ 2	Incorporated *and* Principal Place of Business In Another State	☐ 5	☐ 5
Citizen or Subject of a Foreign Country	☐ 3	☐ 3	Foreign Nation	☐ 6	☐ 6

IV. NATURE OF SUIT (Place an "X" in One Box Only)

CONTRACT	TORTS		FORFEITURE/PENALTY	BANKRUPTCY	OTHER STATUTES
☐ 110 Insurance	PERSONAL INJURY	PERSONAL INJURY	☐ 610 Agriculture	☐ 422 Appeal 28 USC 158	☐ 400 State Reapportionment
☐ 120 Marine	☐ 310 Airplane	☐ 362 Personal Injury - Med. Malpractice	☐ 620 Other Food & Drug	☐ 423 Withdrawal 28 USC 157	☐ 410 Antitrust
☐ 130 Miller Act	☐ 315 Airplane Product Liability	☐ 365 Personal Injury - Product Liability	☐ 625 Drug Related Seizure of Property 21 USC 881		☐ 430 Banks and Banking
☐ 140 Negotiable Instrument	☐ 320 Assault, Libel & Slander	☐ 368 Asbestos Personal Injury Product Liability	☐ 630 Liquor Laws	PROPERTY RIGHTS	☐ 450 Commerce
☐ 150 Recovery of Overpayment & Enforcement of Judgment	☐ 330 Federal Employers' Liability	PERSONAL PROPERTY	☐ 640 R.R. & Truck	☐ 820 Copyrights	☐ 460 Deportation
☐ 151 Medicare Act	☐ 340 Marine	☐ 370 Other Fraud	☐ 650 Airline Regs.	☒ 830 Patent	☐ 470 Racketeer Influenced and Corrupt Organizations
☐ 152 Recovery of Defaulted Student Loans (Excl. Veterans)	☐ 345 Marine Product Liability	☐ 371 Truth in Lending	☐ 660 Occupational Safety/Health	☐ 840 Trademark	☐ 480 Consumer Credit
☐ 153 Recovery of Overpayment of Veteran's Benefits	☐ 350 Motor Vehicle	☐ 380 Other Personal Property Damage	☐ 690 Other		☐ 490 Cable/Sat TV
☐ 160 Stockholders' Suits	☐ 355 Motor Vehicle Product Liability	☐ 385 Property Damage Product Liability	LABOR	SOCIAL SECURITY	☐ 810 Selective Service
☐ 190 Other Contract	☐ 360 Other Personal Injury		☐ 710 Fair Labor Standards Act	☐ 861 HIA (1395ff)	☐ 850 Securities/Commodities/ Exchange
☐ 195 Contract Product Liability			☐ 720 Labor/Mgmt. Relations	☐ 862 Black Lung (923)	☐ 875 Customer Challenge 12 USC 3410
☐ 196 Franchise			☐ 730 Labor/Mgmt.Reporting & Disclosure Act	☐ 863 DIWC/DIWW (405(g))	☐ 890 Other Statutory Actions
REAL PROPERTY	CIVIL RIGHTS	PRISONER PETITIONS	☐ 740 Railway Labor Act	☐ 864 SSID Title XVI	☐ 891 Agricultural Acts
☐ 210 Land Condemnation	☐ 441 Voting	☐ 510 Motions to Vacate Sentence	☐ 790 Other Labor Litigation	☐ 865 RSI (405(g))	☐ 892 Economic Stabilization Act
☐ 220 Foreclosure	☐ 442 Employment	Habeas Corpus:	☐ 791 Empl. Ret. Inc. Security Act	FEDERAL TAX SUITS	☐ 893 Environmental Matters
☐ 230 Rent Lease & Ejectment	☐ 443 Housing/ Accommodations	☐ 530 General		☐ 870 Taxes (U.S. Plaintiff or Defendant)	☐ 894 Energy Allocation Act
☐ 240 Torts to Land	☐ 444 Welfare	☐ 535 Death Penalty		☐ 871 IRS—Third Party 26 USC 7609	☐ 895 Freedom of Information Act
☐ 245 Tort Product Liability	☐ 445 Amer. w/Disabilities - Employment	☐ 540 Mandamus & Other			☐ 900Appeal of Fee Determination Under Equal Access to Justice
☐ 290 All Other Real Property	☐ 446 Amer. w/Disabilities - Other	☐ 550 Civil Rights			☐ 950 Constitutionality of State Statutes
	☐ 440 Other Civil Rights	☐ 555 Prison Condition			

V. ORIGIN (Place an "X" in One Box Only)

☒ 1 Original Proceeding ☐ 2 Removed from State Court ☐ 3 Remanded from Appellate Court ☐ 4 Reinstated or Reopened ☐ 5 Transferred from another district (specify) ☐ 6 Multidistrict Litigation ☐ 7 Appeal to District Judge from Magistrate Judgment

VI. CAUSE OF ACTION
Cite the U.S. Civil Statute under which you are filing **(Do not cite jurisdictional statutes unless diversity)**:
35 U.S.C. 271 et seq.
Brief description of cause:
patent inringement

VII. REQUESTED IN COMPLAINT:
☐ CHECK IF THIS IS A **CLASS ACTION** UNDER F.R.C.P. 23
DEMAND $ Damages TBD; injunction
CHECK YES only if demanded in complaint:
JURY DEMAND: ☒ Yes ☐ No

VIII. RELATED CASE(S) IF ANY
(See instructions): Cases filed by defendant & dismissed for lack of subject matter jurisdiction in July 2005 and December 2005
JUDGE Ellen Segal Huvelle DOCKET NUMBER D.D.C. 05-112, 05-1560

DATE 11/27/06

SIGNATURE OF ATTORNEY OF RECORD

FOR OFFICE USE ONLY

RECEIPT # _____ AMOUNT _____ APPLYING IFP _____ JUDGE _____ MAG. JUDGE _____

AO FORM 85 RECEIPT (REV. 9/04)

United States District Court for the District of Delaware

Civil Action No. - 06 - 710

ACKNOWLEDGMENT OF RECEIPT FOR AO FORM 85

NOTICE OF AVAILABILITY OF A UNITED STATES MAGISTRATE JUDGE TO EXERCISE JURISDICTION

I HEREBY ACKNOWLEDGE RECEIPT OF 2 COPIES OF AO FORM 85.

11-27-06
(Date forms issued)

Mike Bobish
(Signature of Party or their Representative)

Mike Bobish
(Printed name of Party or their Representative)

Note: Completed receipt will be filed in the Civil Action