IN THE UNITED STATES DISTRICT COURT
FOR THE DISTRICT OF DELAWARE

ORACLE CORPORATION and ORACLE U.S.A. INC. Plaintiffs, v. EPICREALM LICENSING, LLP, Defendant.	C.A. No. 06-414-SLR

PLAINTIFFS' ORACLE CORPORATION'S AND ORACLE USA, INC.'S NOTICE OF THE PATENT OFFICE'S REJECTION OF ALL CLAIMS IN THE OFFICE ACTION IN *EX PARTE* REEXAMINATION MAILED JUNE 30, 2008 FOR U.S. PATENT NO. 5,894,554

TO THE COURT, DEFENDANT EPICREALM LICENSING, L.P. AND THEIR COUNSEL OF RECORD:

Please take notice that on June 30, 2008, the United States and Trademark Office ("PTO") issued an "Office Action in *Ex Parte* Reexamination" for U.S. Patent No. 5,894,554 (the "'554 Patent"). A true and correct copy of the June 30, 2008 PTO Office Action ("Office Action") is attached as Exhibit A. Attached as Exhibit B are copies of the PTO's (i) Scanned Paper Reexam File Jacket, (ii) Search Information and Notes, and (iii) List of References considered by the PTO prior to the mailing of the Office Action. In the Office Action, the PTO rejected all of the claims in the '554 Patent under 35 U.S.C. § 102 and/or under 35 U.S.C. § 103 as follows:

1. Claims 1-11 stand rejected under 35 U.S.C. § 102(a) as being anticipated by Christian Derler, "*The World-Wide Web Gateway to Hyper-G: Using a Connectionless Protocol to Access Session-Oriented Services*," Institut fur Informationsverarbeitung und Computergestutzte neue Medien, pp. 1-104 (March 1995) ("Derler"). (Office Action, p.30).

2. Claims 1-4 and 7-11 stand rejected under 35 U.S.C. § 102(a) as being anticipated by Carl Lagoze, Erin Shaw, James R. Davis and Dean B. Krafft, "*Dienst: Implementation Reference Manual*," pp. 1-69 (May 5, 1995) ("Dienst"). (Office Action, p. 52).

3. Claims 5-6 stand rejected under 35 U.S.C. § 103(a) as being unpatentable or obvious over Dienst in view of Derler. (Office Action, p.71).

4. Claims 1-11 stand rejected under 35 U.S.C. § 102(e) as being anticipated by U.S. Patent No. 5,701,451 to Rogers et al. (Office Action, p. 73).

5. Claims 1-3, 5 and 7-11 stand rejected under 35 U.S.C. § 102(e) as being anticipated by U.S. Patent No. 6,249,291 B1 to Popp et al. (Office Action, p. 73).

6. Claims 1-5 and 7-11 stand rejected under 35 U.S.C. § 102(a) as being anticipated by John Gaffney, "*Illustra's Web DataBlade Module, An Illustra Technical Paper*," SIGMOD Record, Vol. 25, No. 1, March 1996. (Office Action, p. 73).

7. Claims 1-5 and 7-11 stand rejected under 35 U.S.C. § 102(a) as being anticipated by Alexander Clausnitzer, Pavel Vogel and Stephan Wiesener, "*A WWW Interface to the OMNIS/Myriad Literature Retrieval Engine*" (1995). (Office Action, p. 73).

The PTO further indicated that: (i) the patentee's response to the Office Action is due on August 30, 2008 unless extended for sufficient cause and only for a reasonable amount of time pursuant to 37 C.F.R. § 1.550(c), and (ii) that the next Office action is intended to be a final action. (Office Action, p. 74, Summary Cover Sheet).

MORRIS, NICHOLS, ARSHT & TUNNELL LLP

/s/ James W. Parrett, Jr.

Mary B. Graham (#2256)
James W. Parrett, Jr. (#4292)
1201 North Market Street
P.O. Box 1347
Wilmington, DE 19899
302.658.9200

Attorneys for Oracle Corporation and Oracle U.S.A. Inc.

OF COUNSEL:

James G. Gilliland
Theodore T. Herhold
Chad E. King
Robert J. Artuz
Eric M. Hutchins
TOWNSEND AND TOWNSEND AND CREW LLP
379 Lytton Avenue
Palo Alto, CA 94301
650.326.2400

Dorian Daley
Peggy E. Bruggman
Matthew M. Sarboraria
ORACLE CORPORATION
ORACLE U.S.A., INC.
500 Oracle Parkway
Redwood Shores, CA 94065

July 16, 2008

2412034

CERTIFICATE OF SERVICE

I hereby certify that on July 16, 2008, I caused the foregoing to be electronically filed with the Clerk of the Court using CM/ECF which will send electronic notification of such filing to the following:

Richard L. Horwitz
David Ellis Moore
POTTER ANDERSON & CORROON, LLP

Additionally, I hereby certify that true and correct copies of the foregoing were caused to be served on July 16, 2008 upon the following individuals in the manner indicated:

BY E-MAIL AND HAND DELIVERY

Richard L. Horwitz
David Ellis Moore
POTTER ANDERSON & CORROON, LLP
1313 N. Market St., Hercules Plaza, 6th Floor
P.O. Box 951
Wilmington, DE 19899-0951

rhorwitz@potteranderson.com
dmoore@potteranderson.com

BY E-MAIL

George S. Bosy, Esquire
JENNER & BLOCK
330 N. Wabash Avenue
Chicago, IL 60611-7603

gbosy@jenner.com

/s/ James W. Parrett, Jr.

James W. Parrett, Jr. (#4292)

EXHIBIT A

UNITED STATES PATENT AND TRADEMARK OFFICE

UNITED STATES DEPARTMENT OF COMMERCE
United States Patent and Trademark Office
Address: COMMISSIONER FOR PATENTS
P.O. Box 1450
Alexandria, Virginia 22313-1450
www.uspto.gov

APPLICATION NO.	FILING DATE	FIRST NAMED INVENTOR	ATTORNEY DOCKET NO.	CONFIRMATION NO.
90/008,574	04/03/2007	5894554	FRIENDFINDER.RX1	2817

8791 7590 06/30/2008

BLAKELY SOKOLOFF TAYLOR & ZAFMAN LLP
1279 OAKMEAD PARKWAY
SUNNYVALE, CA 94085-4040

EXAMINER	
ART UNIT	PAPER NUMBER

DATE MAILED: 06/30/2008

Please find below and/or attached an Office communication concerning this application or proceeding.

UNITED STATES PATENT AND TRADEMARK OFFICE

Commissioner for Patents
United States Patent and Trademark Office
P.O. Box 1450
Alexandria, VA 22313-1450
www.uspto.gov

DO NOT USE IN PALM PRINTER

(THIRD PARTY REQUESTER'S CORRESPONDENCE ADDRESS)

INTELLECTUAL PROPERTY LAW GROUP LLP
12 SOUTH FIRST STREET
SUITE 1205
SAN JOSE, CA 95113

MAILED

JUN 30 2008

CENTRAL REEXAMINATION UNIT

EX PARTE REEXAMINATION COMMUNICATION TRANSMITTAL FORM

REEXAMINATION CONTROL NO. *90/008,574*.

PATENT NO. *5894554*.

ART UNIT *3992*.

Enclosed is a copy of the latest communication from the United States Patent and Trademark Office in the above identified *ex parte* reexamination proceeding (37 CFR 1.550(f)).

Where this copy is supplied after the reply by requester, 37 CFR 1.535, or the time for filing a reply has passed, no submission on behalf of the *ex parte* reexamination requester will be acknowledged or considered (37 CFR 1.550(g)).

Office Action in Ex Parte Reexamination	Control No. 90/008,574 (90 008562, 90 008342)	Patent Under Reexamination 5894554	
	Examiner MARY STEELMAN	Art Unit 3992	

-- The MAILING DATE of this communication appears on the cover sheet with the correspondence address --

a☒ Responsive to the communication(s) filed on *13 May 2008* . b☐ This action is made FINAL.
c☒ A statement under 37 CFR 1.530 has not been received from the patent owner.

A shortened statutory period for response to this action is set to expire 2 month(s) from the mailing date of this letter. Failure to respond within the period for response will result in termination of the proceeding and issuance of an *ex parte* reexamination certificate in accordance with this action. 37 CFR 1.550(d). **EXTENSIONS OF TIME ARE GOVERNED BY 37 CFR 1.550(c).** If the period for response specified above is less than thirty (30) days, a response within the statutory minimum of thirty (30) days will be considered timely.

Part I THE FOLLOWING ATTACHMENT(S) ARE PART OF THIS ACTION:

1. ☐ Notice of References Cited by Examiner, PTO-892.
2. ☒ Information Disclosure Statement, PTO/SB/08.
3. ☐ Interview Summary, PTO-474.
4. ☐ _____.

Part II SUMMARY OF ACTION

1a. ☒ Claims *1-11* are subject to reexamination.
1b. ☐ Claims _____ are not subject to reexamination.
2. ☐ Claims _____ have been canceled in the present reexamination proceeding.
3. ☐ Claims _____ are patentable and/or confirmed.
4. ☒ Claims *1-11* are rejected.
5. ☐ Claims _____ are objected to.
6. ☐ The drawings, filed on _____ are acceptable.
7. ☐ The proposed drawing correction, filed on _____ has been (7a)☐ approved (7b)☐ disapproved.
8. ☐ Acknowledgment is made of the priority claim under 35 U.S.C. § 119(a)-(d) or (f).
   a)☐ All b)☐ Some* c)☐ None of the certified copies have
   1☐ been received.
   2☐ not been received.
   3☐ been filed in Application No. _____ .
   4☐ been filed in reexamination Control No. _____.
   5☐ been received by the International Bureau in PCT application No. _____.
   * See the attached detailed Office action for a list of the certified copies not received.
9. ☐ Since the proceeding appears to be in condition for issuance of an *ex parte* reexamination certificate except for formal matters, prosecution as to the merits is closed in accordance with the practice under *Ex parte* Quayle, 1935 C.D. 11, 453 O.G. 213.
10. ☐ Other: _____

cc: Requester (if third party requester)

DETAILED ACTION

I. Summary

This Office Action addresses the claims for which reexamination has been requested and a substantial new question of patentability has been determined to exist, specifically, claims 1-11 of U.S. 5,894,554 issued to Lowery et al.

II. Notice Regarding Certain Reexamination Issues

The patent owner is reminded of the continuing responsibility under 37 CFR 1.565(a), to apprise the Office of any litigation activity, or other prior or concurrent proceeding, involving Patent No. 5,894,554 throughout the course of this reexamination proceeding. See MPEP §§ 2207, 2282 and 2286.

Extensions of time under 37 CFR 1.136(a) will not be permitted in these proceedings because the provisions of 37 CFR 1.136 apply only to "a Patent Applicant" and not to parties in a reexamination proceeding. Additionally, 35 U.S.C. 305 requires that reexamination proceedings "will be conducted with special dispatch" (37 CFR 1.550(a)). Extension of time in *ex parte* reexamination proceedings are provided for in 37 CFR 1.550(c).

Information Disclosure Statement

Where patents, publications, and other such items of information are submitted by a party (patent owner or requester) in compliance with the requirements of the rules, the requisite degree of consideration to be given to such information will be normally limited by the degree to which the party filing the information citation has explained the content and relevance of the information. The initials of the examiner placed adjacent to the citations on the form PTO /SB /08A and 08B or its equivalent, without an indication to the contrary in the record, do not signify that the information has been considered by the examiner any further than to the extent noted above.

Cited references lacking dates or not found in the file have been lined through.

III. References Cited

Rogers et al., USPN 5,701,451, file date Jun 7, 1995, issue date Dec 23, 1997

> A World Wide Web browser makes requests to web servers on a network which receive and fulfill requests as an agent of the browser client, organizing distributed sub-agents sub-agents as distributed integration solution (DIS) servers on an Intranet network supporting the web server which also has access agent servers accessible over the Internet. DIS servers execute selected capsule objects which perform programmable functions upon a received command from a web server control program agent for retrieving, from a database gateway coupled to a plurality of database resources upon a single request made from a Hypertext document, requested

information from multiple data bases located at different types of databases geographically dispersed, performing calculations, formatting, and other services prior to reporting to the web browser or to other locations, in a selected format, as in a display, fax, printer, and to customer installations or to TV video subscribers, with account tracking. (Abstract)

Popp et al., USPN 6,249,291 B1, file date Sep 22, 1995, issue date Jun 19, 2001

Popp discloses a system and method that "provides the ability to develop and manage Internet transactions." (Col. 3, 11.34-36.) In particular, a Web client can issue a request for a Web page to a Web server and "[s]ome or all of [the] Web page can be generated dynamically using input ... retrieved from an external data source (e.g., database ...)." (See, Abstract.) The Popp architecture is illustrated in Figure 2 of Popp (reproduced below). It comprises an HTTP server 206 (i.e., Web server), a CGIMessenger 210 and one or more applications 214 (i.e., page servers). (See generally, col. 6:32 - col. 7: 35.) Again, this architecture is substantially the same as the architecture described and claimed in the 554 patent; compare Figure 2 of Popp below to Figure 4 of the 544 patent.

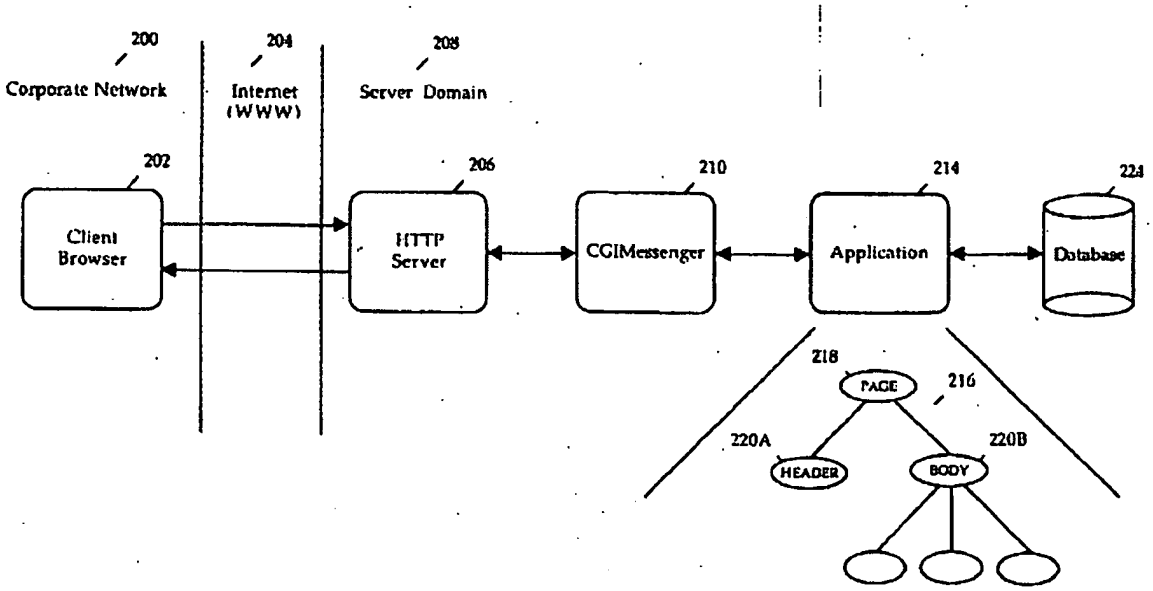

As described in Popp, a request from a Client Browser 202 (i.e., Web browser) is received by the Web server 206. If it is determined from the URL of the request that the request calls for the generation of dynamic content, the "HTTP server 206 initiates CGIMessenger 210." (Col. 7:13 - 22.) That is, processing of the request by the HTTP server 206 is stopped, deflected or interrupted and the CGIMessenger 210 takes over. If the request identifies an application, such as application 214, "the CGIMessenger 210 transmits the client request ... from HTTP Server 206 to application 214." (Col. 7:25-28.) Thus, the CGIMessenger 210 functions as a "dispatcher" to dispatch the request to the application identified in the URL of the request. (Col. 7:5-7) (the "common gateway interface program ... is used to route requests to applications."). Inherent in the CGIMessenger 210 intercepting the request and forwarding it to application 214 (i.e., a page server), the Web server 206 is released from processing that request and can process other requests. Indeed, "CGIMessenger 210 can execute on the HTTP server

206 or another server connected to HTTP server 206, for example." (Col. 6: 57-58) "Application 214 executes an interaction flow to satisfy the user request." Like the CGIMessenger 210, "[a]pplication 214 can execute on the same or different server as CGIMessenger 210 and/or HTTP Server 206." (Col. 7: 24-31.) The application 214 returns "a Web page (e.g., an HTML Web page) that is dynamically generated using complex queries (or other data retrieval mechanisms) to retrieve data and dynamically generate an HTML page using complex logic." (Col. 7: 44 - 58.) "Application 214 can access an external data source such as database 224. Database 224 can be resident on the same server as application 214 (Col. 7:31- 35.) In addition to the foregoing features, Popp also teaches that the system can be used to provide the notion of a "session" between a Web client and an application. Specifically, "[a] client's login password can be retained as state information at the session level, for example." (Col. 13: 33-35.) "Thereafter, the client does not have to enter the password to access an application during that session." Col. 13, 11.35-37. Thus, Popp teaches that the processing of requests may include the step of logging into (using a password, for example) the data source that an application accesses. Popp also teaches the use of HTML extension templates. The present invention provides an extension to HTML that is used on the HTTP server side. The HTML extension is filtered out before a Web page is sent to a client browser. It is used to interpret an HTML template and to render an HTML document before is transmitted to the client browser." (Col. 15: 45-50.) Specifically, Popp "uses an extension to the standard HTML known as the group extension. The group extension provides the ability to combine HTML elements or statements in a

single block." (Col. 15: 55-58.) "The group extension is identified by the <NSWTAG> and </NSWTAG> delimiters." (Col. 16: 31-32.) "[T]he group extension provides a link between an object that implements an HTML element and an object that implements a data item stored in a data source external to the WWW application." (Col. 15: 58 - 61.)

Installation and Planning Guide for Microsoft Internet Information Server, Version 1.0 ("Installation Guide") (published Aug 1995) supplemented with ODBC Web Database Add-on for Microsoft Internet Server Beta Release Notes ("ODBC Notes") (Sep 27, 1995) (Microsoft References)

Both of the Microsoft References describe features of Microsoft Internet Information Server (or simply "Microsoft Internet Server" or "Microsoft Web Server" or "MS IIS"). The Microsoft References disclose that "[w]ith the Web Server and ODBC, [one] can create Web pages with information contained in a database," thus enabling generation of dynamic Web pages. (ODBC Notes, p. 1.) As shown in the following figure from the Installation Guide, Microsoft Internet Information Server with ODBC Add-on consists of multiple components: the Microsoft Internet Information Server with WWW Service; Httpodbc.dll (also called Database Connector), ODBC with SQL Server driver; SQL Server; and multiple databases. This architecture is virtually identical to the architecture for offloading generation of' dynamic web pages disclosed and claimed in the '554 patent, Indeed, compare the figure below to Figure 4 of the 554 patent reproduced above.

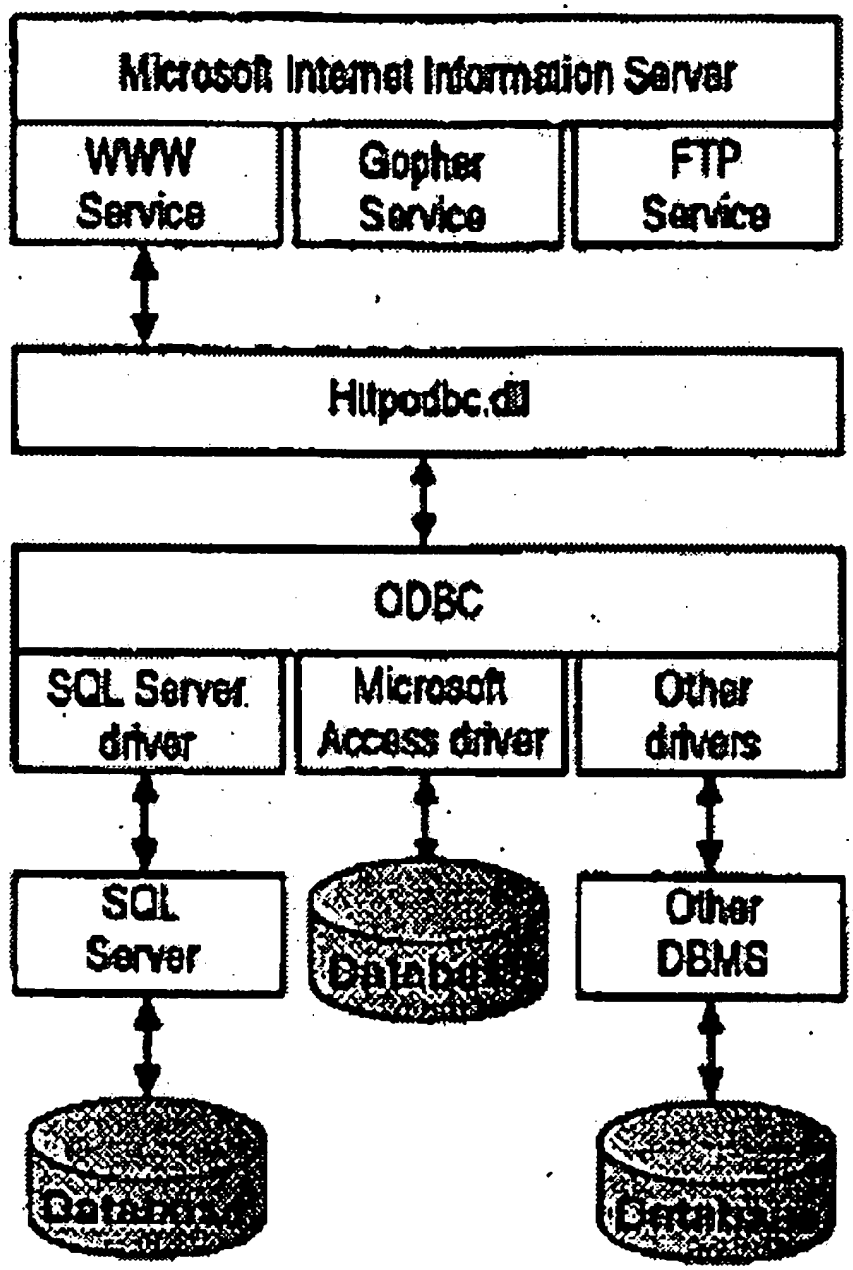

As described in the Microsoft References, "Web browsers.., submit requests to the Internet server by using HyperText Transport Protocol (HTTP). The Internet Server responds: with a document formatted in HyperText Markup Language (HTML). Access to databases is accomplished through a component of the Internet Server called Internet

Database Connector, one of family of Internet Server Extensions. The Database Connector is a Dynamic-Link Library (DLL) file, Httpodbc.dll, that uses ODBC to access databases. Httpodbc.dll uses two types of files to control how the database is accessed and how the output Web page is constructed. These files are Web Database Gateway (WDG) files and HTML extension (HTX) files. The WDG files contain the necessary information to connect to the desired ODBC data source and execute the SQL statement. A WDG file also contains the name and location of the HTX file.

The HTX file is the template for the actual HTML document that will be returned to the Web Browser after the database information has been merged into it by Httpodbc.dll. (ODBC Notes, p. 2.) "On the Internet Server, the entire process of using the Database Connector is performed in six steps... Step 1" The URL is received by the Internet Server. The URL sent by the Web browser actually contains the name of the Database Connector, Httpodbc.dll, and the name of the WDG file to be used." (ODBC Notes, p. 4.) "Step 2: The Internet Server loads Httpodbc.dll and provides it with the remaining information in the URL... Step 3: Httpodbc.dll reads the WDG file... Step 4: Httpodbc.dll connects to the ODBC data source, and executes the SQL statement contained within the WDG file. The connection is made to the ODBC data source by Httpodbc.dll, which in this example loads the ODBC driver for SQL server and connects to the server specified in the definition of the data source. Once the connection is made, the SQL Statement in the WDG file is sent to the SQL Server ODBC driver, which in turn sends it to SQL Server. Step 5: Httpodbc.dll fetches the data from the database, and merges it into the HTX file. Step 6: Httpodbc.dll sends the merged document back to the Internet Server,

which returns it to the client." (ODBC Notes, pp. 3-8.) As applied to the claims of the '554 patent, Microsoft Internet Information Server with WWW Server is a Web Server. It examines an incoming request to determine whether the request was made for a static or a dynamic page, and if the request is made for a dynamic page, it further determines which DLL file is specified (such as Httpodbc.dll) and then interrupts its processing of the request. When "the Database Connector Httpodbc.dll is referenced in the URL," the Web Server will then act as a dispatcher to dispatch the request to the Database Connector Httpodbc.dll, which handles generation of dynamic Web pages. (ODBC Notes, p. 3) Installation Guide at pp. 21-22 discloses that Microsoft Internet Information Server is capable of supporting multiple simultaneous connections. Typically, a single process (or thread) monitors TCP port 80 (the default port for Web requests) for requests. When a requests comes on port 80, the process that monitors the port necessarily has to spawn a different process. Otherwise, other requests that arrive to the Web Server on port 80 would not be processed until that single process finishes processing the previous request, thus rendering simultaneous processing of multiple connections impossible. Accordingly, to support multiple simultaneous connections releasing must necessarily occur. In Step 2 quoted above, "The Internet Server loads Httpodbc.dll and provides it with the remaining information in the URL," thus accomplishing the step of routing said request from said Web server to a page server. In Step 3 quoted above, "The Connection is made to the ODBC data source by Httpodbc.dll, which in this example loads the ODBC driver for SQL Server and connects to the server specified in the definition of the data source. Once the connection is made, the SQL Statement in the WDG file is sent to the SQL Server

ODBC driver, which in turn sends it to SQL Server." SQL Server serves as a data source for the dynamically generated web page that Httpodbc.dll creates. On pp. 21-22, Installation Guide discloses that Microsoft Internet Information Server is capable of supporting simultaneous connections, thus it is capable of processing requests while ODBC driver for SQL server simultaneously processes other requests. In steps 4, 5, and 6 quoted above, Httpodbc.dll retrieves data from one or more data sources and dynamically generates a Web page that includes the retrieved data. "After the SQL statement has been executed, Httpodbc.dll reads the HTX file specified in Sample.wdg (Sample.htx) and replaces every placeholder with the actual data returned by the query." (ODBC Notes, pp. 7-8.) While processing the request according to the six steps described above, Microsoft Internet Information Server with ODBC Add-on identifies a data source from which data is retrieved. Additionally, the Microsoft References disclose logging into data sources because a username is provided in a query. Microsoft Internet Information Server with ODBC maintains a connection cache to data sources. Specifically, Microsoft Internet Information Server enables logging of events into data sources. "Choose Log to SQL/ODBC Database to log activity information to any O.DBC data source. Set the Datasource name, Table, and specify the username and password to use when logging to the database." (Installation Guide, p. 59.) Maintaining a connection cache is inherent because it is impracticable to open and close a connection to a data source for every log entry. Microsoft Internet Information Server with ODBC maintains a page cache: "By default, Httpodbc.dll caches the Web page sent to the client. If a subsequent request is identical, the cached page will be returned without ever accessing the database." (ODBC

Notes, p. 12.) The Microsoft References also disclose HTML extension templates for configuring Web pages. "The Sample.htx file is an HTML document that contains placeholders for data returned from the database." (ODBC Notes, p. 7.) Data retrieved from data sources is inserted into those templates. "After the SQL statement has been executed, Httpodbc.dll reads the HTX file specified in Sample.wdg (Sample.htx) and replaces every placeholder with the actual data returned by the query." (ODBC Notes, p. 7.)

Oracle® Web Server User's Guide, Release 1.0 (1995) and Katrina Montinola, "The Oracle WebServer: A Technical Discussion," September 25, 1995 (collectively "the Oracle references")

Both of the Oracle References describe Release 1.0 of Oracle's Web Server product. "The Oracle WebServer is an HTTP server with a tightly integrated Oracle 7 server that enables the creation of dynamic HTML documents from data stored in an Oracle database." (User's Guide, p. 1-2); see also, Montinola article, p. 2 ("the Oracle WebServer ... facilitates the creation of dynamic HTML documents ..."). As shown in the following figure from the User's Guide, the Oracle WebServer product consists of multiple components that closely correspond to the components of the partitioned architecture described and claimed in the 554 patent: the Oracle Web Listener, the Oracle Web Agent and the Oracle 7 Server. (User's Guide, p. 1-2; Montinola article, p. 1.) Indeed, a comparison of the figure below to Figure 4 of the 554 patent reproduced above reveals the similarities.

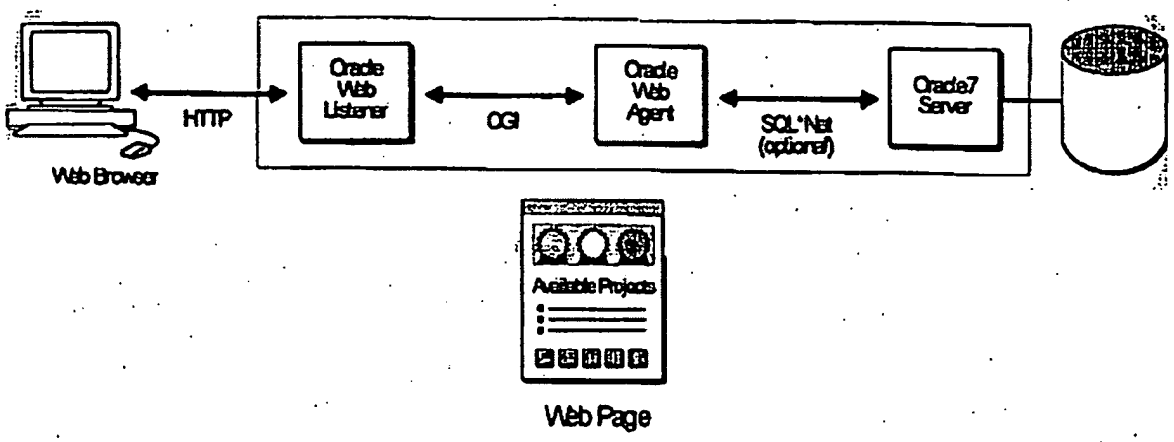

"The Oracle Web Listener is a commercial quality HTTP server that services document requests from any Web browser.... When the Oracle Web Listener receives a request from a client, it first determines whether that request is for a static document or a dynamic document." (User's Guide, p. 1-3; Montinola article, p. 3.) If the request is for a dynamic document, the Web Listener stops processing the request and invokes the Oracle Web Agent to process the request. Id. Thus, a request for a dynamic page is "intercepted" at the Web Listener and passed to the Web Agent. With reference to Fig. 4 of the 554 patent reproduced above, the Web Listener of the Oracle system corresponds to the Web server/interceptor blocks of the claimed system. "The Oracle Web Agent is a CGI program that ... logs into the [Oracle 7 Server] database and executes stored PL/SQL procedures that have been specified as part of the URL [of the received request]." (User's Guide, p. 5-2; Montinola article, p. 3.) "A PL/SQL procedure extracts data from the Oracle 7 database and generates an HTML document .... " (User's Guide; p. 5-1; Montinola article, p. 4.) "The HTML output generated by a PL/SQL procedure is sent from the Oracle 7 Server to the Oracle Web Agent." Id. "The output is then passed on to

the Oracle Web Listener." Id. "The Web Listener sends the generated HTML document back to the Web client." Id. Thus, in the context of the 554 patent the Web Agent serves as a "dispatcher" to dispatch a request for a dynamic Web page to the Oracle 7 Server which, in turn, functions as a "page server." "For maximum performance the Web Listener is designed to run as an asynchronous engine ... providing high performance under a heavy load." (User's Guide, p. 3-2.) Indeed, as mentioned above, when the Web Listener receives a request for a dynamic Web page, it "spawns the Web Agent." (User's Guide, p. 5-4; Montinola article, pp. 3-4.) Inherent in the "asynchronous" Web Listener "spawning" the Web Agent, the Web Listener is released or freed to process other incoming requests. To facilitate identification of the particular data source from which to retrieve data from the Oracle 7 database, the Web Agent may pass a QUERY_STRING environment variable to a PL/SQL procedure. (User's Guide, p. 5-4.) Specifically, "[i]f the PL/SQL procedure requires parameters, these would have been passed to the Web Agent through the QUERY_STRING environment variable." Id. "The Web Agent would then pass these on to the PL/SQL procedure." Id. For example, part of a query such as "person=Gretzky" may be passed to a PL/SQL procedure using the QUERY_STRING environment variable. (User's Guide, p. 5-9.) The PL/SQL procedure will then use the parameter at least in part to identify the data to retrieve.

The Web Agent must "log on" to the Oracle 7 Server in order to interact with it. (User's Guide, p. 5-4.) In order to log on, "the Web Agent requires certain information, such as which server to connect to and what username and password to use." Id. Specifically, the

Web Agent "[e]xtracts the database service name embedded in the URL [of the received request] and logs on to the database using the userid/password defined by the service." (Montinola article, p. 4.) The Oracle WebServer also employs page caching to improve performance. Specifically, "[t]he Oracle Web Listener allows a configurable set of commonly accessed files to be cached in memory. This provides very good performance when these files are accessed by a client." (User's Guide, p. 3-2.) The Oracle WebServer also provides custom HTML extension templates to facilitate dynamic Web page creation. Indeed, "one of the main goals of the Oracle Web Agent is to eliminate the PL/SQL programmer's need to be intimately familiar with World Wide Web Technology. To this end, the Oracle WebServer includes a Developer's Toolkit made up of several PL/SQL packages that minimize a programmer's need to know HTML syntax .... [B]y using the Toolkit he or she will not need to hard code the exact syntax of HTML tags into PL/SQL procedures [i.e., the procedures that extract data from the database and insert the data into an HTML document]." (User's Guide, p. 6-1); (see also Montinola article, p. 3) (the "WebServer Developer's Toolkit ... ease[s] the generation of HTML tags from within the user's PL/SQL code"). In greater detail, "[t]he Oracle WebServer Developer's Toolkit includes ... Hypertext Procedures (HTP)." (User's Guide, p. 6-1.) "A hypertext procedure generates a line in an HTML document that contains the HTML tag that corresponds to its name. For instance, the htp.anchor procedure generates an anchor tag." Id. A Web developer uses these Hypertext Procedures in the PL/SQL code of a procedure designed to generate a dynamic Web page. There are a variety of Hypertext Procedures provided with the toolkit, including "Body Tags" that "are used in the main text of your HTML

page," "List Tags" that allow you to display information in lists, "Form Tags" that "are used to create and manipulate an HTML form," and "Table Tags" that "allow the user to insert tables and manipulate the size and columns of the table in a document." (User's Guide, pp. 6-1 to 6-31; also see, Montinola article, p. 3.) When a PL/SQL procedure retrieves data from the Oracle 7 database, it inserts the data into the Web page in accordance with the "template" defined by one or more of the Hypertext Procedures provided with the toolkit. For example, the "htp.tableOpen" and "htp.tableClose" Hypertext Procedures are used to insert retrieved data into an HTML table within a dynamic Web page. (User's Guide, pp. 6-29 to 6-30.) The above Hypertext Procedures constitute HTML extension templates that a Web developer can use to facilitate configuration of a dynamic Web page. In addition to the Hypertext Procedures provided as part of the toolkit, "[t]he design of the hypertext procedure ... package[] allows you to use customized extensions. Therefore, as the HTML standard changes, you can add new functionality similar to the hypertext procedure ... package[] to reflect those changes." (User's Guide, p. 6-37.)

John Gaffney, "Illustra's Web DataBlade Module, An Illustra Technical Paper," SIGMOD Record, Vol. 25, No. 1, March 1996 ("Illustra")

The Illustra reference discloses "a comprehensive toolset for creating Web-enabled database applications that dynamically retrieve and update Illustra database content."

(Illustra, p. 105.) The basic components and operation of Illustra's Web architecture is illustrated in Figure 2, reproduced below.

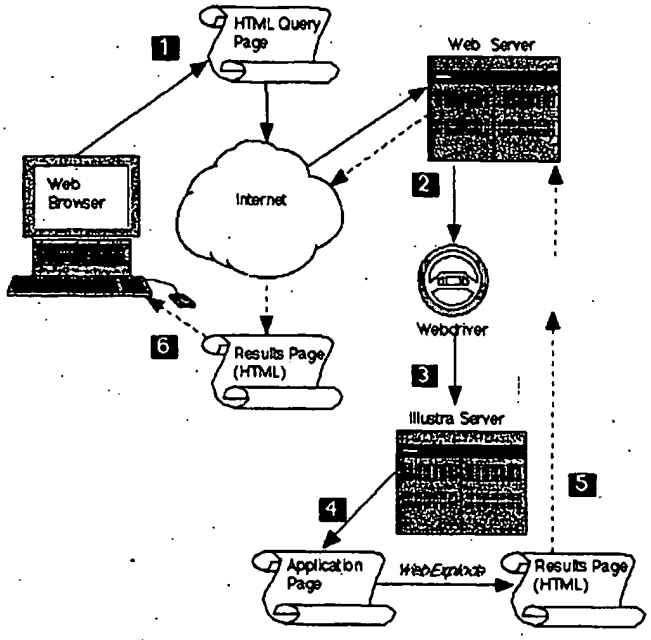

Illustra's architecture has three tiers of which the Web Browser represents the first tier, which corresponds to the client of the 554 patent; the Web Server is the second tier, which corresponds directly to the Web server of the 554 patent; and Illustra Server represents the third tier, corresponding to the page server of the 554 patent. In the Illustra architecture the Web Server offloads the processor-intensive creation of dynamic Web pages to the Illustra Server. The handling of a request for a dynamically generated Web page in the Illustra architecture is as follows. "1. The Web browser queries the Web server with a form submission request or other query." (Id., p. 110.) The Web Server receives the request from the Web browser. "2. The Web server launches the client database application," such as Webdriver. (Id.) The Web Server must examine the request

to determine that launching of the Webdriver is required. Therefore the Web Server inherently intercepts the request. As shown in the figure above, after the Webdriver has been launched, the request is routed to it. Additionally, after routing the request to the Webdriver, the Web Server is no longer occupied with the processing of the request and it is therefore released from its processing. "3. Based on a defined set of parameters, the driver connects to the specified database as a specified user, and then selects a specified Application page..." (Id.) Not only the Webdriver identifies the database, but it also connects to it as a specified user, which requires logging in. "4. WebExplode parses the extracted pages, executes the embedded queries, and then formats the results. This is accomplished within the database server." (Id. p. 110.) The Application page is a template. It is stored in the database and is populated with data retrieved from database. (See Id., p. 108.) The embedded queries are SQL statements, which when executed retrieve data from the databases. As discussed above, WebExplode inserts the dynamically retrieved data into the Application Page. "5. Based on the results of WebExplode, an Application page is placed in the database server memory space and returned to Webdriver..." "6. Webdriver... renders the Application Page through the Web server to the client browser program." The Illustra references also disclose that "the requests to the database are all managed and processed through these already-established connections."(id., p. 109.) Therefore, a connection cache is maintained.

Carl Lagoze, Erin Shaw, James R. Davis and Dean B. Krafft, "Dienst: Implementation Reference Manual," pp. 1-69 (May 5, 1995) ("Lagoze" and/or "Dienst")

Dienst discloses a protocol and server that provides distributed document libraries over the World Wide Web.

The Dienst Manual describes a system and method for managing requests from a WWW client via a WWW server for documents ("Web pages") stored on a page server (Dienst Server) or other data source such as a remote server. See generally Abstract, pages 6-11. The overall configuration is shown in Figure 2, at page 10.

Lagoze / Dienst includes a system and method for managing requests for documents ("Web Pages") stored on page server (Dienst server) or other server from WWW clients. The requester indicates that Dienst discloses the requests from the client being intercepted at the server by a CGI (Common Gateway Interface) stub as shown via figure 2 on page 10 of Dienst. The CGI stub dispatches the requests to a page server (Dienst server) which retrieves the requested dynamic content for delivery to the requesting client and which allows the WWW server to handle other incoming requests.

Alexander Clausnitzer, Pavel Vogel and Stephan Wiesener, "A WWW Interface to the OMNIS/Myriad Literature Retrieval Engine" (1995) ("Clausnitzer")

Clausnitzer describes a World-Wide-Web (Web) interface to a multimedia information search and retrieval system called "OMNIS/Myriad." The system is client/server-based

and enables a user with a Web browser to search and retrieve documents and information about those documents from a database. As shown in Figure 5 of the reference (reproduced below), one embodiment of the system architecture includes an HTTP server (i.e., Web server) that receives HTTP requests containing OMNIS/Myriad search requests from a user's Web client (i.e., Web browser), a CGI "Gateway Program," and one or more OMNIS servers, each connected to a respective database of documents. (§ 3.2.) "The CGI program passes the WWW client's requests to one of the OMNIS servers which translate them into OMNIS queries for the database. The query results are sent back to the CGI program which transforms it into a WWW client readable format," i.e., a Web page. (Id.) Because each search request may be different and will produce different search results, each such request from a Web client constitutes a dynamic Web page generation request to the Web server.

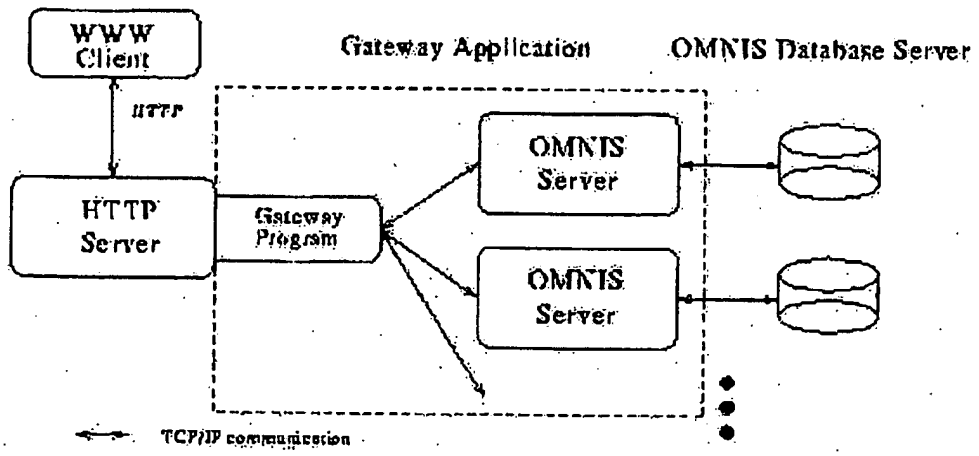

Again, the architecture of the system described and illustrated in the Clausnitzer reference is virtually identical to the partitioned architecture disclosed and claimed in the 554 patent, as a comparison of the figure above to Figure 4 of the 554 patent once again

demonstrates. As described in the Clausnitzer reference, when the Web server recognizes from the URL in an HTTP request received from the Web client that the request is an OMNIS query (i.e., a dynamic Web page generation request), the Web server interrupts its processing of the request and passes the request to the CGI Gateway Program. (See §3.3 and description accompanying Figure 6.) Thus, the request is intercepted. The CGI program serves as a dispatcher, dispatching the request to one or more OMNIS servers. (§ 3.2 and Figure 5.)

Inherent in the CGI program accepting the request and forwarding it to an OMNIS server, the Web server process is released from processing that request and can process other requests. Indeed, Clausnitzer notes that "[w]ith fast following HTTP requests the CGI program can be started several times by the HTTP server to run parallel," thus confirming that the HTTP server continues to process other requests after starting the CGI program for a prior request. (§ 3.3.) "Each OMNIS server has a permanent connection to a single database," which serves as the "data source" from which the OMNIS server dynamically retrieves query results. (§ 3.2.) The OMNIS server to which a particular request is dispatched will process the query and return the results. The OMNIS server thus constitutes a "page server." "The query results are sent back to the CGI program which transforms it into a WWW client readable format," i.e., a Web page, which is then transmitted back to the client. (§ 3.2.) Because "[e]ach OMNIS server has a permanent connection to a single database," the connection that a given OMNIS server has to its data source is necessarily, maintained or cached. Also, OMNIS servers do require login and logout (see, § 3.2). Thus processing an OMNIS query necessarily requires at least

one initial login to the OMNIS server that processes the request. In addition to the foregoing features, Clausnitzer also teaches the use of custom HTML extension templates: A major point in the realization of the OMNIS-HTTP gateway was to make it easy to customize the pages and forms for different types of OMNIS databases. Since many databases should be available via WWW the gateway application has to provide easy methods for the administrator to add and change database parameters. For these purposes a special Mask Definition Language was developed. The masks consist of the fixed HTML fragments [i.e., custom HTML extension templates] which are filled by the gateway application and returned to the client as request results." (§ 3.3.)

Christian Derler, "The World-Wide Web Gateway to Hyper-G: Using a Connectionless Protocol to Access Session-Oriented Services," Institut fur Informationsverarbeitung und Computergestutzte neue Medien, pp. 1-104 (March 1995) ("Derler")

The Derler Thesis describes a system and method for managing requests from a WWW (World Wide Web) client via a WWW server (WWW Gateway) for documents or other information stored on a page server (Hyper-G Server) or other data source such as a document cache or remote server. See generally Abstract, Introduction at pages 1-2, and chapter 4 describing the WWW Gateway, particularly at pp. 48-55. The WWW Gateway includes software features described at pages 48-55, including Master, Passing, Slave, and Child processes, which intercept HTTP requests from the WWW client at the WWW Gateway, and dispatch such requests to the page server (Slave Processes and Hyper-G Server), while the WWW Gateway processes other requests

Bowman et al., "Harvest: A Scalable, Customizable Discovery and Access System" (March 12, 1995) ("Harvest")

Specifically, Harvest teaches "a system that provides an integrated set of customizable tools for gathering information from diverse repositories, building topic-specific content indexes, flexibly searching the indexes, widely replicating them, and caching objects as they are retrieved across the Internet. The system interoperates with WWW clients and with HTTP, FTP, Gopher, and NetNews information resources." (Harvest, p. 1.) Of particular relevance to claim 4 of the 554 patent, Harvest teaches the use of a connection cache. For example, Harvest explains that "[b]ecause [remote data retrieval] poses so much more load on provider-site servers, we implemented a connection caching mechanism, which attempts to keep connections open across individual object retrievals." (Id, at p. 10.) Harvest also teaches a page cache as found in claim 6 of the 554 patent. Specifically, Harvest explains that "[i]n addition to caching Gopher, HTTP, FTP, and NetNews objects, we maintain a cache of recent DNS name-to-address mappings to optimize common-case cache behavior." (Id, at p. 19.)

Antchev et al., "A WWW Learning Environment for Mathematics" (December 12, 1995)("Antchev")

Antchev teaches a system for providing mathematic learning experiences over the Internet. (Antchev, p. 1.) To facilitate this, an "HTTP-server spawns [a] handler which is referred to by the URL of an incoming information request. The handler being invoked should return the appropriate HTML or other type of document or it should generate such a document on the fly." (Id. at p. 4.) Antchev, like Harvest, also teaches the use of a connection cache. For example, Antchev explains that because for "most of the exercises there might be several requests which form a session," a context tree data structure is used to store state information across an entire user session. Thus, Antchev maintains a "connection cache" across the session.

Ashley Beitz, Renato Iannella, Andreas Vogel, Zhonghua Yang, "Integrating WWW and Middleware"(May 2, 1995) ("Beitz")

Specifically, Beitz teaches an "architecture which enables WWW clients to access and invoke middleware services. In the architecture, the clients interact with the WWW, which in turn interacts with a range of middleware systems which provides access to the distributed system services." (Beitz, p. 2.) The Beitz reference is particularly relevant for its teaching of "logging into" a data source, as recited in claim 5 of the 554 patent. For example, Beitz teaches "filling in the necessary parameters to invoke [a] selected RPC operation." (Id. at p. 5.)

Ari Luotonen, and Kevin Altis, "World-Wide Web Proxies" (April 1994) ("Luotonen")

Specifically, Luotonen teaches a proxy server that "waits for a request from inside the firewall, forwards the request to [a] remote server outside the firewall, reads the response and then sends it back to [a] client." (Luotonen, p. 1.) Of particular relevance to claim 6 of the 554 patent is Luotonen's teaching of the use of a page cache. For example, Luotonen explains that "[a] brand new feature is [page] caching performed by the proxy, resulting in shorter response times after the first document fetch." (Id.)

Richard Knudson, "Application Development with Microsoft's Internet Information Server" (February 2, 1996) ("Knudson")

The Knudson reference describes Microsoft's "Internet Information Server" product that allows for the generation of dynamic Web pages. Knudson, p. 1. The reference is particularly relevant because it teaches the use of "custom HTML extension templates" as recited in claims 7 and 8 of the 554 patent. Specifically, pages 3-4 of Knudson show examples of custom HTML extension templates into which data retrieved by the Internet Information Server is inserted when generating a dynamic Web page.

IV. Background and Overview

USPN 5,894,554 Lowery et al.

The '554 Patent issued on April 13, 1999. The patent generally relates to handling Web page requests, managing Web sites, and dynamic Web page generation. (Abstract & Col. 2:15-23).

The patent distinguishes some Web pages as having a static nature that remains static until manually modified and other Web pages as being dynamic Web pages which contain content that is generated dynamically by retrieving the necessary requested data and generating the requested Web page dynamically. (Col. 1:38-55).

The patent is said to address a problem of managing numerous Web pages and Web page requests of Web clients at a Web site (Col. 2:2-12). With reference to Figure 4, reproduced below, the method is performed in a system including a Web server 201, separate page servers 404, and data sources 406, 408 and 410. The patent includes routing a Web request from the Web server to a Page server. Such routing is described as being performed by the dispatcher 402 (Col. 5 line 60 - col. 6 line 11). The routing frees the Web server to handle subsequent incoming requests. The Page server may then process the request, and the Web server is released to process other requests (Col. 2:20-35; Col. 4:54 - Col. 6:32). In this manner, dynamic Web pages may be generated by the Page servers.

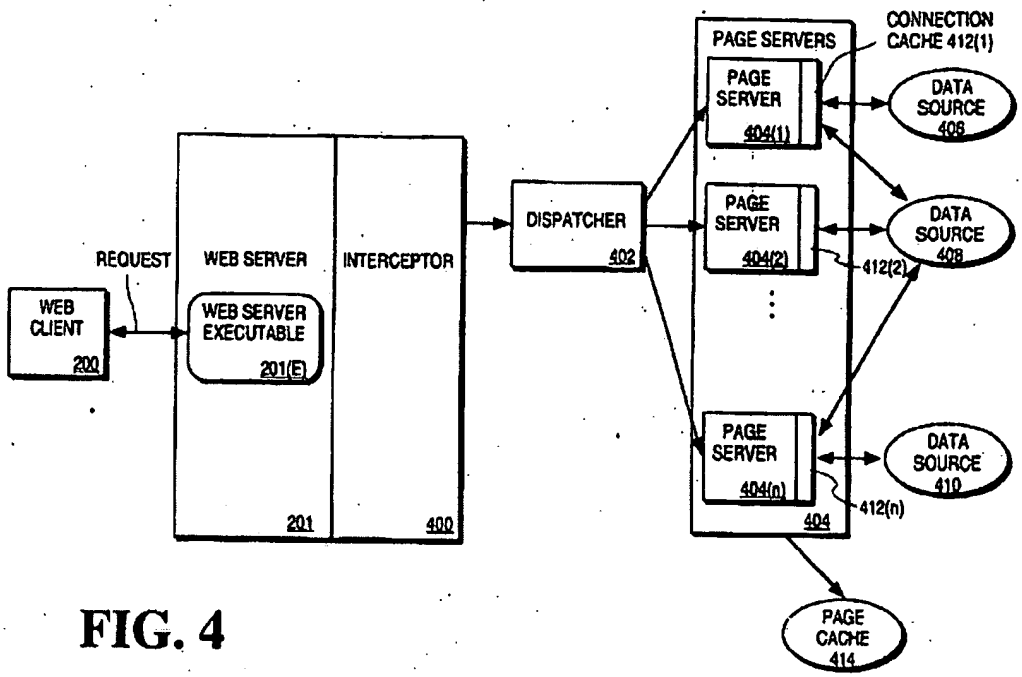

FIG. 4

A review of the prosecution history reveals that Examiner initially rejected claims (CTNF 07/03/1997) based on USPN 5,532,838 to Barbari and "Beyond the Web: Excavating the Real World Via Mosaic" by Goldberg et al. Subsequent arguments persuaded Examiner to apply new art. A second non final office action applied USPN 5,404,527 to Irwin et al., to reject claim limitations. Arguments overcame claim rejections.

An Interview (12/29/1998) resulted in claim amendments that cancelled original dependent claim 2, independent claims 13 and 14, and dependent claim 15. Original claim 2 limitations were rolled up into remaining independent claims. Resulting independent claims (final claim

numbering: claim 1-method claim, claim 9 - system claim, and claim 11- machine readable medium version) recite similar limitations including:

...routing said request...wherein said routing step further includes the steps of intercepting said request...routing said request from said Web server/ second computer to a dispatcher, and dispatching said request to said page server...

The examiner did not indicate reasons for allowance during prosecution of the application which became the 5,894,554 patent to Lowery. It appears that the combination of limitations, as a whole, was not found in the prior art of record.

At the time of the Interview (12/29/1998) new related patent prior art was presented on a Form 892, citing USPN 5,761,673 to Bookman et al. and USPN 5,751,956 to Kirsch.

Bookman discloses a method and apparatus for generating dynamic Web pages. Specifically, the present invention claims a method and apparatus for generating dynamic Web pages on a Web server by invoking and executing predefined procedural packages stored in a database. The claimed invention receives an object request on the Web server and activates a Web agent on the Web server based on the object request. The Web agent invokes and executes the predefined procedural package to retrieve data from a data repository, and then formats the retrieved data as HTML output. (Abstract)

While Bookman appears to be relevant prior art, Bookman fails to fairly disclose "routing said request from said Web server to a page server", thereby freeing up the Web server to receive subsequent requests.

Kirsch discloses a Web server computer system which provides for server based controlled management over a client reference to a resource locator independently selected by a client computer system and referencing a server external Web server. The Web server system provides a client system with a predetermined URL reference to the Web server system encoded with predetermined redirection and accounting data including a reference to a second server system. On receipt by the first Web server system of the predetermined URL reference from the client system, the predetermined redirection and accounting data is decoded from the predetermined URL and processed by the Web server system to provide the client system with a redirection message including the reference to the second server system. The accounting data is processed by the Web server system and resulting data is selectively stored by the Web server system. (Abstract) Kirsch discloses a Web server that receives a client reference (request), tracks (accounting data) the client activity, and provides the client with a redirection message (col. 5: 37), "thereby minimizing the CPU and disk intensive load on the Web server computer system and the resulting latency (col. 5: 50-51) (i.e. client system is used to redirect to second server system)."

In contrast, the Lowry patent, '554, passes the client request from the Web server through a dispatcher, to a page server (second server) to minimize the CPU and disk intensive load on the

Web server. While Kirsch appears to be relevant prior art, Kirsch fails to fairly disclose a Web server that routes said request through a dispatcher, to a page server.

Both '554 and '956 patents attempt to reduce the workload of the Web server, but do it in different ways.

V. Claim Rejections – Relevant Statutes and Detailed Analysis

35 USC § 102

The following is a quotation of the appropriate paragraphs of 35 U.S.C. 102 that form the basis for the rejections under this section made in this Office action:

> A person shall be entitled to a patent unless –
>
> (a) the invention was known or used by others in this country, or patented or described in a printed publication in this or a foreign country, before the invention thereof by the applicant for a patent.

Claims 1-11 are rejected under 35 U.S.C. 102(a) as being anticipated by Derler.

Claim 1.

[a] A computer-implemented method for managing a dynamic Web page generation request to a Web server, said computer-implemented method comprising the steps of:

The Derler Thesis discloses a computer-implemented method for managing dynamic Web page generation requests from a WWW client sent to a Web server (WWW Gateway). Introduction, pp. 1-2; § 3.3.4 at p. 37, § 4.1 at pp. 43-44; § 4.7.2 at pp. 94-96; Figs. 4.16-4.17 at p. 95. The WWW Gateway manages dynamic Web page generation requests from remote WWW clients

and thus constitutes a Web server. Operation of the WWW Gateway is a computer-implemented method, see generally Chapter 4.2 2. Derler's WWW clients use Web browsers to access information from the Hyper-G servers, therefore the Derler system is handling dynamic "Web page" generation requests. See Derler at p. 4 ("WWW clients, often called 'WWW browsers'"); p. 48; pp. 67-68 (explaining user interaction with Hyper-G systems with "WWW clients like Mosaic or Netscape", both of which are Web browsers).

[bl] routing said request from said Web server to a page server,

Derler: Web page requests are directed from the WWW Gateway (the "Web server") to the Hyper-G Server ("page server"). (§ 4.2.2 at pp. 48-49, § 4.2.3 at p. 50, 52, § 4.7.2 at p. 95, Fig. 4.17.) As described in Section 4.2.3, and accompanying Figures 4.1 - 4.7, a request from a client is initially received by a "Master Process" within the Web server. When the request is received, the Master Process "forks", generating a child process to process the request. "The master can close its connection to the client immediately after forking and is then ready to accept the next connection." If this is the first request from the Web client, the child process becomes a "Slave Process" (route directly to Slave Process / Page Server) which opens a connection to, and starts a session with, the Hyper-G server on behalf of the Web client. The Slave Process then sends a standard "entry page" back to the Web client, enabling the user to begin searching the Hyper-G server database. Subsequent search requests from the Web client are then received by the Master Process, which again forks to create a child process and to release the Master Process to process other requests. For these subsequent requests, the child process becomes a "Passing Process"

(route request from Web Server to Passing Process) that looks for the previously created Slave Process (page server) that holds the open connection to the Hyper-G server and then passes (dispatches) the client request to that Slave Process. The Slave Process will then transform the request into a Hyper-G request and send it to the Hyper-G server. The Hyper-G Server's response is transmitted back to the Slave Process. The Slave Process then transforms the response, as needed, and passes a Web page containing the results back to the Passing Process which relays it the Web client. In that respect, the Slave Process functions as a "page server," and the Hyper-G server functions as a data source. Thus, the system routes a client request from the Master Process of the Web server to a Slave Process that serves as a "page server" for handling the request.

[b2] said page server receiving said request and

As described in Derler, when the Master Process "forks" to pass a client request to a Slave or Passing Process, "the master can close its connection to the client immediately after forking and is then ready to accept the next connection." (§ 4.2.3.) Derler: The client request is received by the slave process (page server) for processing. (See Id.)

[b3] releasing said Web server to process other requests,

Derler's WWW Gateway uses parallel processing of Web page requests wherein the WWW Gateway is released from one request to process other requests. See § 4.2.2 at pp. 48-49; § 4.2.3

at p. 49 (Master process of WWW Gateway), Figs. 4.1, 4.2, 4.3, 4.4 and 4.5 (pp. 52-55) illustrating process of releasing WWW Gateway to process other requests in parallel. Derler expressly recognizes that to avoid problems with throughput, "the process which accepts connections from the "outside" [i.e., from a Web client] is not burdened with the actual processing of the request, but instead is allowed to accept further requests while others are still being processed." (§ 4.2.2 -"Parallel Processing of Requests".)

[b4] wherein said routing step further includes the steps of intercepting said request at said Web server,

Derler: (§ 4.2.2 at pp. 48-49; § 4.2.3 at pp. 49-50; Figs. 4.16-4.17 and accompanying disclosure at pp. 94- 95); function of Master Process executing on WWW Gateway is to intercept Web page requests. Forked process is intercepted by a Passing Process.

[b5] routing said request from said Web server to a dispatcher, and

Derler: The Web Server routes the request to the Passing Process which in turn dispatches the request to the Slave Process (Page Server) that holds a connection to the Hyper-G server. Passing Process identifies appropriate connection. (§ 4.2.2 at p. 48; § 4.2.3 at p. 50, Figs. 4.16-4.17 and accompanying disclosure at pp. 94-95) (depicting GET request path, including WWW Gateway server to Hyper-G server); Web Server (Master) routes request to dispatcher (Passing

Process is dispatcher/dispatches to identified Slave Process / Page Server), which looks for session keys to determine where to handle Web page request;

The Passing Process then dispatches the request to the Slave Process (page server) that holds an open connection to the Hyper-G server for requests from that particular client. As shown in Figures 4.1- 4.7, there may be many Slave Processes, and the Passing Process (dispatching the request to an identified slave process) must identify the appropriate one. The Passing Process thus functions to dispatch the request to the appropriate Slave Process.

[b6] dispatching said request to said page server;

Derler: Id.; The Passing Process then dispatches the request to the Slave Process (page server) that holds an open connection to the Hyper-G server for requests from that particular client. As shown in Figures 4.1- 4.7, there may be many Slave Processes, and the Passing Process (dispatching the request to an identified slave process) must identify the appropriate one. The Passing Process thus functions to dispatch the request to the appropriate Slave Process. Figure 4.1, page server is Slave process which opens a connection to Hyper-G server (data source) and sends Hyper-G request to Hyper-G server. See Fig. 4.5 – 4.6, Slave A and Slave B process the request (page servers).

The Hyper-G server as stated in § 3.5 of Derler may perform a further requesting from a remote page server. The reference discloses a Hyper-G page server obtaining information from remote

servers; the Hyper-G server fetches the information [from a remote server] and delivers it to the client, via a Slave Process (§ 4.4.2)

[c] processing said request, said processing being performed by said page server while said Web server concurrently processes said other requests; and

Derler: § 4.2.2 at pp. 48-49; § 4.2.3 at p. 49; pp. 52-54, processing of request by Hyper-G server; Figs. 4.3, 4.4, 4.5, such processing occurs concurrently with the WWW Gateway processing other requests. See also § 4.2.3 at p. 50 ("When it [a slave process on the WWW Gateway] has accepted a connection initiated by the passing process, it reads the request, processes it (usually by transforming it into a Hyper-G request for the server, receives the response from the Hyper-G server, transforms the response again if necessary, sends it to the passing service, closes the connection to the passing process.") Necessarily, since the client receives a response from the Hyper-G server, the Hyper-G server has processed the request. The slave process connects to Hyper-G server page server for processing of the request. See § 4.4.2, "The class WWWSlave contains all data and code necessary to process requests…"

As described in Derler, when the Master Process "forks" to pass a client request to a Slave or Passing Process, "the master can close its connection to the client immediately after forking and is then ready to accept the next connection (web server concurrently processes said other requests)." § 4.2.3. Indeed, Derler expressly recognizes that to avoid problems with throughput, "the process which accepts connections from the "outside" [i.e., from a Web client] is not

burdened with the actual processing of the request, but instead is allowed to accept further requests while others are still being processed." § 4.2.2 -"Parallel Processing of Requests".

[dl] dynamically generating a Web page in response to said request,

Derler: § 3.3.4 at p. 37; Fig. 4.10 at p. 71 (depicting sample of a dynamically-generated Web page in response to a search request). The Slave Process receives the results of the search from the Hyper- G server's database and generates a responsive Web page for the client, § 4.4.2 See, e.g., § 4.5.5 & Figure 4.13 (illustrating an exemplary Web page displaying the results of a search).

[d2] said Web page including data dynamically retrieved from one or more data sources.

Derler: Id.; data source for Web page can be data from a data cache, see § 3.3.5; see also p. 95, showing data retrieved from a remote data source in the form of a remote server.

Claim 2.

The computer-implemented method in claim 1 wherein said step of processing said request includes the step of identifying said one or more data sources from which to retrieve said data.

Derler: § 4.7.2, Fig. 4.17 (p. 95) (Hyper-G server identifies remote server from which to retrieve data); see also § 4.1 (integration of WWW databases into Hyper-G, inherently such databases

would be identified so as to retrieve data from such WWW databases). See also § 3.2.3 ("Supporting bidirectional links can easily be done by keeping links and anchors in a separated database, called the link server. This link server is an object oriented database. It holds information about Hyper-G "objects', which can be links, anchors, descriptions of documents, relations between such objects."); § 3.5 ("should information from a remote server be needed, the Hyper-G server which the client is connected to fetches the information and delivers it to the client.").

Claim 3.

The computer-implemented method in claim 2 wherein said step of dynamically generating said Web page includes the step of dynamically retrieving said data from said one or more data sources.

Derler: § 3.3.4 at p. 37; Fig. 4.10 at p. 71 (depicting sample dynamically-generated Web pages; data is retrieved dynamically from one or more sources); § 3.3.5 at p. 37 (dynamically retrieving data from document cache).

Claim 4.

The computer-implemented method in claim 3 wherein said step of processing said request includes the step of said page server maintaining a connection cache to said one or more data sources.

Derler: § 3.5 at p. 40 (attributes and links to documents stored in data sources are stored separately in a database, and as such constitute a connection cache).

Alternatively, a Slave Process receives a first request from a particular Web client, opens a connection to, and starts a session with, the Hyper-G server on behalf of the Web client. It maintains that connection to the Hyper-G server so that it can service all subsequent requests from the same client. Thus, the Slave Process caches the open connection to the Hyper-G server. The purpose of this is to avoid having to reestablish connections to the Hyper-G server each time, § 4.2.3.

Claim 5.

The computer-implemented method in claim 3 wherein said step of processing said request includes the step of logging into said one or more data sources.

Derler: § 3.3.3 at pp. 35-36 (access rights dictated by username and password, inherently teaches "logging in" to data source; § 4.5.6.1 at pp. 76-77; Figure 4.8 ("you have been logged into the IICM Information Server").

Claim 6.

The computer-implemented method in claim 3 wherein said step of dynamically generating said Web page includes the step of maintaining a page cache containing said Web page.

Derler: § 3.3.5 at p. 37 (caching of documents (Web pages) in a cache; step of dynamically generating a Web page is performed by retrieving a cached document in response to a request for the document).

Claim 7.

The computer-implemented method in claim 3 wherein said page server includes custom HTML extension templates for configuring said Web page.

Derler: § 3.3.4 at p. 37 (Hyper-G server generates HTML elements (custom extension templates) configuring for use search results in form of a Web page; see generally § 4.5 and subsections; §§ 2.5, 2.5.4 (fill-out forms are "extensions of initial HTML specification"), §§ 4.6.1 (HTML files provide user interface), 4.6.1.1- 4.6.1.2; 4.6.

Claim 8.

The computer-implemented method in claim 7 wherein said step of processing said request further includes the step of inserting said dynamically retrieved data from said one or more data sources into said custom HTML extension templates.

Derler: Id., e.g., § 4.6.1.1; Figure 4.13 shows data retrieved from data source inserted into HTML extension template defining presentation of results of search.

Regarding Claim 9:

With regard to the limitations of claims under reexamination, an analysis must be made under 35 USC 112, sixth paragraph.

According to **MPEP 2181**:

A claim limitation will be presumed to invoke 35 U.S.C. 112, sixth paragraph, if it meets the following 3-prong analysis:

(A) the claim limitations must use the phrase "means for" or "step for;"

(B) the "means for" or "step for" must be modified by functional language; and

(C) the phrase "means for" or "step for" must not be modified by sufficient structure, material, or acts for achieving the specified function.

Such a claim limitation is to be construed to cover the corresponding structure, described in the specification and equivalents thereof.

MPEP 2183 Making a Prima Facie Case of Equivalence

Factors that support a conclusion that the prior art element is an equivalent are:

(A) the prior art element performs the identical function specified in the claim in substantially the same way, and produces substantially the same results as the corresponding element disclosed in the specification.

(B) a person of ordinary skill in the art would have recognized the interchangeability of the element shown in the prior art for the corresponding element disclosed in the specification.

(C) there are insubstantial differences between the prior art element and the corresponding element disclosed in the specification.

(D) the prior art element is a structural equivalent of the corresponding element disclosed in the specification. That is, the prior art element performs the function specified in the claim in substantially the same manner as the function is performed by the corresponding element described in the specification.

In reference to USPN 5,894,554 to Lowery et al:

The cited function, “generating said request”, is linked to a corresponding structure, "means for generating said requests."

The "means for generating a request" is described as a Web client machine running a Web browser. (Lowery: Col. 1:24-26; Col. 2:4-7; Col. 4:12-15; Col. 4:55-57; Col. 6:27-31; See Col. 8:25-29.) The Web Client Computer (the corresponding structure), as noted in the Specification, having a processor which operates a Web browser, is the corresponding structure that accomplishes the function of generating a request. (a processor of a computer that is, or has, a Web client running a Web browser" or equivalents thereof).

The cited function, "receiving said request from said first computer", is linked to a corresponding structure, the "means for receiving said request from said first computer."

The "means for receiving said request from said first computer" is described by the Specification as the Web server 201 receiving requests from the Web client 200. (Lowery: Figure 4; Figure 5; Col. 4:54-59; See Figure 2; Col. 3:64-Col. 4:10.) The Web server 201 is also repeatedly described as including Web server executable, Id. As described above, the Specification also establishes that that even if a Web server is software, the software module operates on a computer as described within the specification. The corresponding structure of the "means for receiving" is "a processor of a computer that is, or has, a Web server running Web server executable" or equivalents thereof. The corresponding structure accomplishes the function of "receiving said request from said first computer."

The cited function, "processing said requests and dynamically generating a web page in response to said request" is linked to a corresponding structure, a "page server processing means processing said requests and dynamically generating a web page in response to said request."

With regard to the function of the "processing said requests and dynamically generating a web page in response to said request", the Specification shows that such function is accomplished by a corresponding Page server 404(1)-(n) structure. (Lowery: Figure 4; Figure 5; Col. 5:37-Col. 6:31; Col. 8:39-43.) The Page server is page generation software. The page server software is operated on a computer system, a processor of a computer that runs Page server software/ page-

generating software that generates a dynamic Web page, as described by the Specification. In one embodiment, Page servers reside on a separate machine to accomplish the claimed function. (Lowery: Col. 5 line 49-50.)

Claim 9:

[a] A networked system for managing a dynamic Web page generating request, said system comprising:

The Derler Thesis discloses a networked system for managing dynamic Web page generation requests from a WWW client sent to a Web server (WWW Gateway). Introduction, pp. 1-2; § 3.3.4 at p. 37; § 4.1 at pp. 43-44; § 4.7.2 at pp. 94-96; Figs. 4.16-4.17 at p. 95 (depicting networked system of WWW client, WWW Gateway, Hyper-G Server and remote servers (page servers) and document cache (page cache)).

[b] one or more data sources;

Derler: See id; Figure 4.17 (Hyper-G server, remote server and document cache are data sources.)

[c] a page server having a processing means;

Derler: "processing means" refers to a general-purpose processor or microprocessor 102 (Figure 1) and equivalents thereof, col. 3 lines 25 et seq. § 4.4.2, "The class WWWSlave contains all data and code necessary to process requests (slave process as a page server) from a single WWW client..." Alternately, The Hyper-G server is a page server (serves pages to Slave Process) and as such inherently has a general-purpose processor, the same as or equivalent to the processing means of the '554 patent. Derler, § 3.1 at p. 32; Figs. 4.16-4.17 and accompanying disclosure at pp. 94-95.

[d] a first computer system including means for generating said request; and

Derler: "means for generating said request" refers to a Web client in the form of a Web browser and equivalents thereof. Col. 4 lines 11-17. See Derler, § 1 at p. 1; § 3.3.4 at p. 37; Figs. 4.16-4.17 and accompanying disclosure at pp. 94-95 (depicting WWW Client, which is a first computer system which has a browser generating a Web page request). See also Derler at p. 4 ("WWW clients, often called 'WWW browsers'"); p. 48; pp. 67-68 (explaining user interaction with Hyper-G systems with "WWW clients like Mosaic or Netscape", both of which are Web browsers).

[el] a second computer system including

Derler: WWW Gateway is the second computing system. See generally Chapter 4.

[e2] means for receiving said request from said first computer,

Derler: The means for receiving request is Web server executable 201E (Figure 4) and equivalents thereof. Derler's Master process is a Web server executable process, same as or equivalent to '554 patent Web server executable. See Derler § 4.2.2 at p. 48-49; § 4.2.3 at p. 49-50; Figs. 4.1, 4.16-4.17 and accompanying disclosure at pp. 94-95 (depicting WWW Gateway and Master Process receives a Web page request from WWW client (first computer)).

[e3] said second computer system also including a router, said router routing said request from said second computer system to said page server,

Derler: See Id; see also Fig. 4.2, p. 52, route to passing process, p. 49-50, (alternately) Child/Slave processes are a "router" within meaning of the '554 patent since they route request to Hyper-G page server.

[e4] wherein said routing further includes intercepting said request at said second computer,

Derler: § 4.2.2 at pp. 48-49; § 4.2.3 at pp. 49-50; Figs. 4.16-4.17 and accompanying disclosure at pp. 94-95; forking process of Master indicates interception of WWW request by "Passing Process".

[e5] routing said request from said second computer to a dispatcher, and

Request is routed from Master Server to Passing Process. Passing Process selects appropriate Slave Process and "dispatches" request to said Slave Process for processing. Derler: § 4.2.3 at pp. 49-50

[e6] dispatching said request to said page server

Derler: See id.; Figure 4.1, page server is Hyper-G server; Passing Process dispatches a Hyper-G request to the Slave Process (page server), which in turn may connect to a Hyper-G server. See also discussion of "dispatching" for element [b6] for claim 1, supra.

[e7] said page server receiving said request and

Derler: See 4.2.3, Slave Process receives request from Passing Process.

[e8] releasing said second computer system to process other requests,

Derler: § 4.2.2 at pp. 48-49; see also, e.g., Fig 4.5 and accompanying disclosure at pp. 49-54 (depiction of WWW Gateway processing multiple concurrent requests).

[e9] said page server processing means processing said request and dynamically generating a Web page in response to said request,

Derler: § 3.3.4 at p. 37; pp. 52-54 and Figs. 4.16-4.17 and accompanying disclosure at pp. 94-95 (the general-purpose processor ("processing means") in the Hyper-G page server and/or remote page servers process request). See also, e.g., § 4.4.2 at p. 65; Fig. 4.10 at p. 71 (sample of a dynamically-generated Web page in response to request). See also § 4.2.3 at p. 50: "When [a slave process (page server) on the WWW gateway] has accepted a connection initiated by the passing process, it reads the request, processes it (usually by transforming into a Hyper-G request for the server), receives the response from the Hyper-G server, transforms the response again if necessary, sends it to the passing process, and closes the connection to the passing process." Inherently, if the client receives a response from the Hyper-G server, the Hyper-G server has processed the request. (Content may be served from the Hyper-G server (page server), received and processed at the Slave process (page server), and in turn received at the Passing Process (page server), prior to being delivered as a request response to the client. Each of these processes may be involved in "serving pages".)

[e10] said Web page including data dynamically retrieved from said one or more data sources.

Derler: § 3.3.4 at p. 37; Fig. 4.10 at p. 71 (depicting sample dynamically-generated Web pages from multiple sources); data source can be data cache, see § 3.3.5; see p. 95 Figure 4.17, data source can be a remote server.

Claim 10:

[a] The networked system in claim 9 wherein said router in said second computer system includes:

Derler: § 4.2.3 at pp. 49-50 (Master Process, Slave Process, and Passing Process interact. The WWW Gateway "second computer system" involves the Master Process; Figs. 4.16-4.17 and accompanying disclosure at pp. 94-95.

[b] an interceptor intercepting said request at said second computer system and routing said request; and

Derler: § 4.2.2 at p. 48; § 4.2.3 at pp. 49-50 (master and forking process comprise an interceptor / Passing Process) As noted above, the Passing Process "intercepts" the request, and makes a determination as to which Slave Process to route the request.

[c] a dispatcher receiving said routed request from said interceptor and dispatching said request to said page server.

The Passing Process dispatches the request to the appropriate Slave Process (page server). The Slave Process and the Hyper-G Server work together to serve pages. Derler: § 4.2.3 at pp. 49-50; Figs. 4.1-4.4

Claim 11:

[a] A machine readable medium having stored thereon data representing sequences of instructions, which when executed by a computer system, cause said computer system to perform the steps of:

Derler: The Hyper-G system is a computer system executing software instructions which are inherently stored in a machine readable medium. § 1 at p. 1; § 3.3.4 at p. 37; § 3.1 at p. 32. See also Fig. 4.16-4.17 at p. 95; § 4.6.3. See also generally Chapter 4 (WWW gateway is a computer system which includes software).

[bl] routing a dynamic Web page generation request from a Web server to a page server,

Derler: § 4.2.2 at p. 49; § 4.2.3 at pp. 50, 52, § 4.7.2 at p. 95; Figs. 4.16-17; Web page requests are dynamically routed from WWW Gateway ("Web server" / Master Process) to page server (Slave Process and Hyper- G server or a remote server work together to serve pages).

[b2] said page server receiving said request and

Derler: The client Web page request is received by the page server for processing. See § 4.2.3.

[b3] releasing said Web server to process other requests

Derler: Derler's WWW Gateway uses parallel processing of Web page requests wherein the WWW Gateway is released from one request to process other requests. See § 4.2.2 at pp. 48-49; § 4.2.3 at p. 49 (Master process of WWW Gateway), Figs. 4.1, 4.2, 4.3, 4.4 and 4.5 (pp. 52-55) illustrating process of releasing WWW Gateway to process other requests in parallel.

[b4] wherein said routing step further includes the steps of intercepting said request at said Web server,

Derler: § 4.2.2 at pp. 48-49; § 4.2.3 at p. 49; Figs. 4.16-4.17 and accompanying disclosure at pp. 94-95; forking process of Master indicates interception of WWW request by Passing Process.

[b5] routing said request from said Web server to a dispatcher, and

Derler: § 4.2.3 at pp. 49-50, Web Server routes request to Passing Process. Passing Process dispatches request to appropriate Slave Process. Fig. 4.7

[b6] dispatching said request to said page server;

Derler: See Id; Passing Process dispatches request to appropriate Slave Process (page server), which in turn may dispatch request to Hyper-G server (alternate page server).

[c] processing said request, said processing being performed by said page server while said Web server concurrently processes said other requests; and

Derler: § 4.2.2 at pp. 48-49; § 4.2.3 at p. 49, pp. 52-54, processing of request by Slave Process (page server); Fig. 4.7, such processing occurs concurrently with the WWW Gateway processing other requests. See also § 4.2.3 at p. 50 ("When it [a Slave process on the WWW Gateway] has accepted a connection initiated by the passing process, it reads the request, processes it (usually by transforming it into a Hyper-G request for the server, receives the response from the Hyper-G server, transforms the response again if necessary, sends it to the passing service, closes the connection to the passing process.") The client receives a response from Passing Process (Fig.4.7), after the Slave Process (page server) and possibly with further processing by the Hyper-G server (alternate page server), has processed the request.

"After accepting the connection, the Master forks generating a child process. Immediately after that, the master closes its connection to W3client A and is then ready to accept other connections (Web server concurrently processes said other requests)."

[d] dynamically generating a Web page, said Web page including data retrieved from one or more data sources.

Derler: § 3.3.4 at p. 37; Fig. 4.10 at p. 71 (depicting sample dynamically-generated Web page from data from one or more sources); data cache and remote server are data sources, § 3.3.5 and p. 95.

Claims 1-4 and 7-11 are rejected under 35 U.S.C. 102(a) as being anticipated by Dienst:

Claim 1:

[a] A computer-implemented method for managing a dynamic Web page generation request to a Web server, said computer-implemented method comprising the steps of:

Lagoze describes a Web-based architecture, called "Dienst," that provides access to distributed document libraries over the World WideWeb (Web / WWW). (See, Abstract at p. 1.) The architecture comprises a Web server, a CGI stub, a Dienst server and a document database (§ 4.1 at p. 9). Using a Web browser, a user can submit a search request for certain documents meeting the search parameters. A so-called "Dienst request" is packaged within the path portion of a standard HTTP request and transmitted from the user's Web client (browser) to the Web server. (§4.1 at p. 11). "Search results are presented as a hypertext document," i.e., a Web page, which is transmitted back to the client as a standard HTTP response. (§ 1 at p. 6; § 4.1 at p. 11.) Because of the dynamic nature of the results, each search request constitutes a "dynamic Web page generation request." The Dienst Manual describes a computer-implemented method for handling dynamic Web page requests. (P. 6; pp. 9-11, Fig. 2.) Since the Web clients accessing the Dienst system use "popular browsers of the World Wide Web [such] as Mosaic, Cello and Netscape" (p. 6), the information presented to the Web clients constitutes "Web pages."

[bl] routing said request from said Web server to a page server,

Dienst Manual: (Pp. 10-11; Fig. 2); Web server is WWW server; page server is Dienst Server. Arrows in Figure 2 illustrate routing of request from WWW server to Dienst Server. (§ 4.1 at p. 10) As described in the Lagoze reference, when the Web server detects a Dienst request in the path portion of an HTTP request received from a Web client, the Web server invokes (routes request through CGI Stub) the CG1 stub. The CGI stub "is a small, simple executable that strips the Dienst request from the HTTP request, packages a few important environment variables that contain information about the request .... and sends (further routing said request) them via socket I/O to the Dienst server." (§ 4.1 at pp. 11.) The Dienst server is a "page server" in that it processes the Dienst request, formulates the results of a search, and transmits a dynamic Web page containing the search results back to the Web client. (Id.)

[b2] said page server receiving said request and

Dienst Manual: The Dienst Server receives the request. (See Id.)

[b3] releasing said Web server to process other requests,

Dienst Manual: (P. 11.) CGI stub strips Dienst request from HTTP request; the CGI stub is invoked each time the gateway Web server receives a Dienst request. Inherently, the WWW server is released from processing that request, and can process other requests. This is further apparent from nature of the Dienst system to provide for simultaneous access to documents on

Dienst system for distributed WWW clients. P. 11, The Web server serves as a front-end for Dienst. The Web server is set up as a gateway to a Dienst server.

[b4] wherein said routing step further includes the steps of intercepting said request at said Web server,

Dienst Manual: As described above [b1], the Web server recognizes from the path portion of the HTTP request that the request is a Dienst request (i.e., a dynamic Web page generation request) and passes the request to the CGI stub, thereby "intercepting" it. That is, the Web server stops or interrupts its processing of the Dienst request and deflects processing of the request to the CGI stub. (P. 11)

[b5] routing said request from said Web server to a dispatcher, and

Dienst Manual: Request is passed to CGI stub (routing process) (Fig. 2; pp. 10-11), dispatching is a function of Dienst CGI stub. The CGI stub serves as a dispatcher that dispatches the request to one or more Dienst servers. (§ 4.1 and 4.2 at pp. 11-12.)

[b6] dispatching said request to said page server;

Dienst Manual: (P. 11); Dienst CGI stub sends (dispatches) request via I/0 socket to Dienst Server (page server). (P. 12), The Dienst Manual describes a Dienst Server which functions as a

user interface server which "provides a front-end for searching the collection provided by all inter-operating Dienst servers." See Figure 2, page 10 "Dienst Server" and "Other Dienst Servers". The "other Dienst servers" host a distributed collection of documents. (P. 12), "Each server is able to locate the indexing and repository site for a specific publisher using tables that are maintained by a distinguished server... The respective user interface server then dispatches search requests, in parallel to the Dienst index servers that corresponds to the publisher selections(s)..."(Dienst Manual, page 12, ¶¶ l, 2.)

The CGI Stub dispatches to the Dienst Server, which may in turn "dispatch" other Dienst Servers or to document databases. (See Fig. 2, p. 10)

[c] processing said request, said processing being performed by said page server while said Web server concurrently processes said other requests; and

Dienst Manual: Fig. 2; pp. 10-11; function of Dienst Server is to process requests and generate Web pages. Because a "Dienst server is a standalone multi-threaded process" (§ 4.1 at p. 11), it necessarily processes the request while the Web server continues to concurrently process other HTTP requests. P. 11, The Web server serves as a front end for Dienst. Inherently, with the CGI stub program intercepting the Dienst request, the Web server process is released from processing that request, and can process other requests concurrently. This is further apparent from the nature of the Dienst system to provide for simultaneous access to documents on the Dienst system from distributed WWW clients.

[dl] dynamically generating a Web page in response to said request,

Dienst Manual: "Search results are presented as a hypertext document," i.e., a Web page, which is transmitted back to the client as a standard HTTP response. (§ 1 at p. 6); "responses from Dienst are formatted" (§ 4.1 at p. 11); The function of Dienst server is to dynamically generate a Web page in response to request; (see also Figs. 4 and 5, pp. 14-15) (showing dynamically generated pages); (p. 58) (describing information that can be provided on dynamically-generated pages).

[d2] said Web page including data dynamically retrieved from one or more data sources.

Dienst Manual: Pp. 6, 9-12, Fig. 2, data sources are repositories of documents on Dienst Server or in a document database; data is dynamically retrieved at time of processing of request. See also Figs. 4 and 5, pp 9-11 & 58.

Claim 2:

The computer-implemented method in claim 1 herein said step of processing said request includes the step of identifying said one or more data sources from which to retrieve said data.

Dienst Manual: "A user of a Dienst server perceives a single logical collection [of documents], even though the collection is distributed over multiple servers. This is accomplished by

interaction between a set of Dienst servers ...." (§ 4.2 at p. 11.) "Each server, in a set of interoperating Dienst servers, is capable of responding to a request for any document in the distributed collection. The respective server uses the publisher in the docid of the requested document and the mapping tables (processing / identifying one or more data sources) downloaded from the meta server to route the document request to the server that acts as the repository for the publisher. This routing is transparent to the user." (Id. at p. 12.) Pp. 11-12, indexing service and distributed searching function of Dienst Server inherently identifies a data source from which to retrieve data since that is the function of the indexing and searching functions.

Claim 3:

The computer-implemented method in claim 2 wherein said step of dynamically generating said Web page includes the step of dynamically retrieving said data from said one or more data sources.

Dienst Manual: P. 11; Dienst server dynamically retrieves data from data source such as a repository of documents. (Figure 2, Document Database) P. 12, distributed document access feature of Dienst server. See also Figs. 4 and 5 (showing pages with dynamically retrieved data).

Claim 4:

The computer-implemented method in claim 3 wherein said step of processing said request includes the step of said page server maintaining a connection cache to said one or more data sources.

Dienst Manual: As mentioned above, in the Dienst architecture, "[a] Dienst server perceives a single logical collection [of documents], even though the collection is distributed over multiple servers. This is accomplished by interaction between a set of Dienst servers..... " (§ 4.2 at p. 11.) Each document in the document database has an associated "docid" and "each docid ... consists of a publisher identifier and a name." (§ 4.2 at p. 12.), "Each server in a set of interoperating Dienst servers indexes and acts as a repository for documents from one or more publishers, in the current version, all the documents for a publisher must be indexed and reside on the same server. Each server is able to locate the indexing and repository site for a specific publisher using tables that are maintained by a distinguished server, the meta server .... This allows every server to provide the next two functions .... distributed document access - Each server, in a set of interoperating Dienst servers, is capable of responding to a request for any document in the distributed collection. The respective server uses the publisher in the docid of the requested document and the mapping tables downloaded from the meta server to route the document request to the server that acts as the repository for the publisher. This routing is transparent to the user." (Id. at p. 12.) Thus, the meta server serves as a "connection cache" in that it maintains information about which Dienst server in a set of interoperating Dienst servers is the repository (i.e., data source) for a given publisher's documents. (Pp. 9, 11-12); server registration process, and/or indexing service, is maintenance of connection cache to data source.

Claim 7:

The computer-implemented method in claim 3 wherein said page server includes custom HTML extension templates for configuring said Web page.

Dienst Manual: P. 6, "Search results are presented as a hypertext document. (configured Web page)" (Pp. 15, 17, 60 and 61) HTML is used for configuring Web pages, e.g., pages containing data in response to queries of Dienst system; HTML image map templates of Fig. 7 (p. 17) are custom HTML extension templates. (See also Figures 4 and 5, pp. 14, 15.)

The Dienst server provides a Web designer who is managing the document database with a variety of document format templates that can be used to provide different formats for display of documents retrieved from the database. These templates include "inline - a paged format that is an image displayed inline on HTML pages" as well as "composite - a paged format that is a composite of thumbnail images." (§ 7 at pp. 33-35; § 5 at p. 17.) With the composite format, "[each] thumbnail page is implemented using a HTML image map, allowing the user to select on a page and dispatch a URL to view that specific page in readable form." § 5 at p. 17.

Claim 8:

The computer-implemented method in claim 7 wherein said step of processing said request further includes the step of inserting said dynamically retrieved data from said one or more data sources into said custom HTML extension templates.

Dienst Manual: P. 17, Fig. 7, disclosing HTML image map templates which are custom HTML extension templates; data retrieved from data sources are inserted into HTML image map templates. See also Figs. 4 and 5, which appear to be based on HTML templates.
When document data is retrieved from the document database it is inserted into one of the document format templates supported by the Dienst server for display to the user. (§ 7 at pp. 33-35; § 5 at p. 17.)

Claim 9:

[a] A networked system for managing a dynamic Web page generation request, said system comprising:

Dienst Manual: (Abstract; pp. 5-6, 9-11); Fig. 2 -showing distributed networked system for managing dynamic Web page generation requests). A Web-based architecture, called "Dienst," that provides access to distributed document libraries over the World Wide Web (Web). (See, Abstract at p. 1.) The architecture comprises a Web server, a CGI stub, a Dienst server and a document database. (§ 4.1 at p. 9.) Using a Web browser, a user can submit a search request for certain documents meeting the search parameters. A so-called "Dienst request" is packaged within the path portion of a standard HTTP request and transmitted from the user's Web client to the Web server. (Lagoze, §4.1 at p. 11.) "Search results are presented as a hypertext document," i.e., a Web page, which is transmitted back to the client as a standard HTTP response. (§ 1 at p. 6; § 4.1 at p. 11.) The Dienst Manual describes a computer-implemented method for handling

dynamic Web page requests. The Dienst system includes a WWW server which manages dynamic Web page requests from WWW clients, and a page server ("Dienst Server"); system is a computer-implemented method as indicated throughout the document. Because of the dynamic nature of the results, each search request constitutes a "dynamic Web page generation request." The Web clients accessing Dienst system use "popular browsers of the World Wide Web [such] as Mosaic, Cello and Netscape" (p. 6), and the information presented to the Web clients constitutes "Web pages".

See comments above regarding 35 U.S.C. § 112, ¶ 6.

[b] one or more data sources;

Dienst Manual (Pp. 6 and 9-12); Dienst servers storing documents in the Dienst system are data sources, as are document databases. The Dienst architecture includes a "document database" consisting of one or more document repositories (data sources). (§ 4.1 at p. 9.) See Fig. 2, p. 10.

[c] a page server having a processing means;

Dienst Manual: Under § 112, ¶ 6, "processing means" refers to a general-purpose processor or microprocessor 102 ('554: Fig. 1) and equivalents thereof ('554": col. 3 lines 25 et seq.) See Dienst Manual (pp. 6 and 9- 12) and Fig. 2. ; Dienst Servers are computers which inherently

include general-purpose processors or equivalent thereof. The Dienst server is a "page server" and it necessarily includes a processing means.

[d] a first computer system including means for generating said request; and

Dienst Manual: Under § 112, ¶ 6, "means for generating said request" refers to a Web client in the form of a Web browser. ('554: Col. 4 lines 11-17.) See Dienst Manual, WWW client, Fig. 2, p. 6 (mentioning popular Web browsers such as Netscape) and p. 10. Using a Web browser, a user can submit a search request for certain documents meeting the search parameters. The user's Web browser constitutes a "first computer system."

[e1] a second computer system including

Dienst Manual: WWW server; Fig. 2; pages 10 and 11. The Web server of the Dienst architecture constitutes a "second computer system" and it is intended to receive requests from client Web browsers. "A Web server that serves as a front end for Dienst..." (p. 11)

[e2] means for receiving said request from said first computer,

Dienst Manual: Under § 112 ¶ 6, the means for receiving request is Web server executable 201E ('554: Figure 4) and equivalents thereof. Dienst WWW server includes an executable as a means for receiving request from WWW client. Fig. 2, pages 10 and 11 (CERN & NCSA servers), 31

and 32 (describing downloading/ installing NCSA or CERN Web server code (executable)). Executable server code on a processor provides the means for receiving a request.

[e3] said second computer system also including a router, said router routing said request from said second computer system to said page server,

Dienst Manual: (Fig. 2; pp. 10-11); Dienst CGI stub acts as a router routing request from WWW server to Dienst Server. As described above, when the Web server detects a Dienst request in the path portion of an HTTP request received from a Web client, the Web server (second computer) invokes the CG1 stub. The CGI stub "is a small, simple executable that strips the Dienst request from the HTTP request, packages a few important environment variables that contain information about the request .... and sends (routes) them via socket 1/O to the Dienst server (page server)." (§ 4.1 at pp. 11.) The Dienst server is a "page server" in that it processes the Dienst request, formulates the results of a search, and transmits a dynamic Web page containing the search results back to the Web client (Id.).

[e4] wherein said routing further includes intercepting said request at said second computer,

Dienst Manual: As described above, the Web server (second computer) recognizes (intercepts) from the path portion of the HTTP request that the request is a Dienst request (i.e., a dynamic Web page generation request) and passes the request to the CGI stub (intercepting at second computer / Web server).

[e5] routing said request from said second computer to a dispatcher, and

Dienst Manual: Pp. 10-11, routing request from Web server to CGI stub / dispatcher. P. 11; Web server (second computer) recognizes (intercepts) from the path portion of the HTTP request that the request is a Dienst request (i.e., a dynamic Web page generation request) and passes (route from second computer to dispatcher) the request to the CGI stub (intercepting at second computer / Web server) ("the stub is a small, simple executable that strips the Dienst request from the HTTP request."). The CGI stub serves as a dispatcher that dispatches the request to one or more Dienst servers. (§ 4.1 and 4.2 at pp. 11-12.)

[e6] dispatching said request to said page server,

Dienst Manual P. 11; CGI stub send (dispatches) request via I/O socket to Dienst Server (page server). The CGI stub serves as a dispatcher that dispatches the request to one or more Dienst servers. (§ 4.1 and 4.2 at pp. 11-12.) See additional "dispatching" comments at claim 1 [b6], supra.

[e7] said page server receiving said request and

Dienst Manual: (Fig. 2; pp. 10 and 11); Dienst Server receives request.

[e8] releasing said second computer system to process other requests,

Dienst Manual: P. 11. CGI stub strips Dienst request from HTTP request; the CGI stub is invoked each time the gateway Web server (second computer) receives a Dienst request. Inherently, the WWW server (second computer) is released from processing that request, and can process other requests. "A Web server that serves as a front-end for Dienst...", (p. 11).

[e9] said page server processing means processing said request and dynamically generating a Web page in response to said request,

Dienst Manual: Fig. 2; pp. 9-12; function of general-purpose processor ("processing means"), in the Dienst Server is to process requests and generate Web pages. See also Figs. 4 and 5, pp. 14-15 (showing dynamically generated pages); p. 58 (describing information that can be provided on dynamically-generated pages). A Dienst server retrieves information from the document database that meets a user's search criteria and generates a Web page containing the results of the search. (§ 1 at p. 6; § 4.1 at p. 11) ("Search results are presented as a hypertext document," i.e., a Web page, which is transmitted back to the client as a standard HTTP response). Because each search can be different, the process of responding to search requests necessarily is "dynamic."

[e10] said Web page including data dynamically retrieved from said one or more data sources.

Dienst Manual: (Pp. 6, 9-12), Fig. 2, data sources are repositories of documents on Dienst Server or in a document database; data is dynamically retrieved at time of processing of request. (See also Figs. 4 and 5, pp. 14-15) -showing dynamically generated pages); (p. 58)-describing information that can be provided on dynamically generated pages.

Claim 10:

[a] The networked system in claim 9 wherein said router in said second computer system includes:

Dienst Manual: As described above, the Web server (second computer) recognizes from the path portion of the HTTP request that the request is a Dienst request (i.e., a dynamic Web page generation request) and passes (routes) the request to the CGI stub. (Pp. 10-11; Fig. 2); WWW server (second computer) functions as a router to CGI Stub.

[b] an interceptor intercepting said request at said second computer system and routing said request; and

Dienst Manual: (Id.) – Fig. 2, WWW Server (second computer) intercepts / routes information to CGI stub for further routing to Dienst server (page server). Interception is triggered by a "Dienst request" (p. 11) packaged within a path portion of the HTTP request. When the HTTP request contains a "Dienst request" the CGI stub program is invoked.

[c] a dispatcher receiving said routed request from said interceptor and dispatching said request to said page server.

Dienst: (Id.), dispatching request to a page server is a feature of CGI-stub and thus it functions as a "dispatcher." See also discussion of "dispatching" claim 1[b6], supra. See Fig. 2, WWW Server (interceptor) routes request to CGI Stub. CGI Stub (dispatcher) dispatches request to Dienst Server (page server). (§ 4.1 and 4.2 at pp. 11-12.)

Claim 11:

[a] A machine readable medium having stored thereon data representing sequences of instructions, which when executed by a computer system, cause said computer system to perform the steps of:

Dienst: Pp. 6, 9-11, 30-33 (computer system comprises WWW server which includes a software Web server process such as CERN or NCSA Web server plus Dienst Server which is a multi-threaded software processes, such processes are inherently sequences of instructions stored on a machine- readable medium). See Fig. 2.

[bl] routing a dynamic Web page generation request from a Web server to a page server,

Dienst: Pp. 10-11; Fig. 2; Web page requests are routed from WWW server (Web server) to Dienst Server (page server), via a CGI Stub. The "Dienst request" packaged within the pat

portion of the HTTP request to the Web server (p. 11) triggers the routing of the dynamic Web page generation request (Dienst request) from a Web server to a page server (Dienst server).

[b2] said page server receiving said request and

Dienst: Fig. 2, pages 10 and 11, Dienst Server (page server) receives request.

[b3] releasing said Web server to process other requests wherein said routing step further includes the steps of

Dienst: P. 11, CGI stub strips Dienst request from HTTP request; the CGI stub is invoked each time the gateway Web server receives a Dienst request. Inherently, the WWW server is released from processing that request, and can process other requests. This is further apparent from the nature of the Dienst system to provide for simultaneous access to documents on the Dienst system for distributed WWW clients. The CGI stub accepts the request and forwards it to the Dienst server. Inherently, the Web server process is released from processing that request and can process other requests. "A Dienst server is a standalone multi-threaded process written in Perl." (§ 4.1 at p. 11.) A Web server that serves as a front-end for Dienst...", p. 11.

[b4] intercepting said request at said Web server,

Dienst: See Fig. 2, The Web server recognizes/ detects a path portion of an HTTP request, intercepts the request, and diverts it to a CGI stub.

[b5] routing said request from said Web server to a dispatcher, and

Dienst: Fig. 2, pp. 10-11, The HTTP request, detected by the Web Server is routed to the CGI Stub. The Dienst CGI stub (dispatcher) further sends request via I/O socket to Dienst Server.

[b6] dispatching said request to said page server;

Dienst: P. 11; CGI-stub dispatches request to a Dienst Server (page server). (§ 4.1 and 4.2 at pp. 11- 12.)

[c] processing said request, said processing being performed by said page server while said Web server concurrently processes said other requests; and

Dienst: Fig. 2, pp. 10-11; the function of the Dienst Server is to process requests and generate Web pages. Inherently, with the CGI stub program intercepting the Dienst request, the Web server process is released from processing that request, and can process other requests concurrently. The Dienst server processes the Dienst request. Because a "Dienst server is a standalone multi-threaded process" (§ 4.1 at p. 11), it necessarily processes the request while the Web server continues to concurrently process other HTTP requests. This is further apparent from

nature of the Dienst system to provide for simultaneous access to documents on Dienst system for distributed WWW clients. "A Web server that serves as a front-end for Dienst...", p. 11.

[d] dynamically generating a Web page, said Web page including data retrieved from one or more data sources.

Dienst: (Abstract; pp. 6, 9-12); Fig. 2; Dienst server dynamically generates Web page, retrieves data from data sources, such as documents on Dienst server or in a document database. See also Figs. 4 and 5, pp. 14-15 (showing dynamically generated pages); p. 58 (describing information that can be provided on dynamically-generated pages). See pages 57-61 regarding types of responses generated (generated Web pages) following a request. Because each search can be different, the process of responding to search requests necessarily is "dynamic."

Claim Rejections - 35 USC § 103

The following is a quotation of 35 U.S.C. 103(a) which forms the basis for all obviousness rejections set forth in this Office action:

> (a) A patent may not be obtained though the invention is not identically disclosed or described as set forth in section 102 of this title, if the differences between the subject matter sought to be patented and the prior art are such that the subject matter as a whole would have been obvious at the time the invention was made to a person having ordinary skill in the art to which said subject matter pertains. Patentability shall not be negatived by the manner in which the invention was made.

The factual inquiries set forth in *Graham* **v.** *John Deere Co.*, 383 U.S. 1, 148 USPQ 459 (1966), that are applied for establishing a background for determining obviousness under 35 U.S.C. 103(a) are summarized as follows:

1. Determining the scope and contents of the prior art.

2. Ascertaining the differences between the prior art and the claims at issue.
3. Resolving the level of ordinary skill in the pertinent art.
4. Considering objective evidence present in the application indicating obviousness or nonobviousness.

Claims 5 and 6 are rejected under 35 U.S.C. 103(a) as being unpatentable over Dienst, in view of Derler.

Claim 5:

The computer-implemented method in claim 3 wherein said step of processing said request includes the step of logging into said one or more data sources.

Dienst: Fig. 2, The Dienst Server "logs into" one or more data sources (other Dienst Servers or Document Database) § 8.3.1 at p. 41, "The basic Dienst server interoperates with a distributed network of other Dienst servers…A user may submit searches to a number of publishers, which are indexed by the distributed sites. A search is processed in parallel by each of these sites (logged into one or more data sources) and uniform search results (processed request) are returned to the user. The foreign server package enhances searching by allowing a Dienst server to interoperate with non-Dienst technical report servers (logged into one or more data sources). (inherent to accessing documents from foreign server is logging into the foreign server)."

Even more explicitly, Derler discloses "logging into data sources."

Derler: § 3.3.3 at pp. 35-36 (access rights dictated by username and password, inherently teaches "logging into" one or more data sources); § 4.5.6.1 at pp. 76-77, "…user has an account…logged

in as an identified Hyper-G user, which can be verified…Identification extends the user's access rights…"

Modification of the Dienst system to include securely logging into a data source as part of processing of requests, as taught by Derler, would be an obvious feature to access distributed documents.

Claim 6:

The computer-implemented method in claim 3 wherein said step of dynamically generating said Web page includes the step of maintaining a page cache containing said Web page.

Dienst discloses (p. 6 & 17) thumbnail images (page cache containing said Web page). The thumbnails are implemented using the HTML imagemap mechanism.
More explicitly Derler discloses caching of Web pages in a Web server to improve performance. (§ 3.3.5 at p. 37.)

Maintaining a page cache containing a Web page would be an obvious modification of the Dienst system. A person skilled in the art would have been motivated to add page caching in the Dienst server so as to provide ready access to frequently-requested documents without having to query foreign servers, as explained in the Derler Thesis at 3.3.5.

The following rejections are incorporated by reference as follows:

Claim Rejections - 35 USC § 102

(e) the invention was described in (1) an application for patent, published under section 122(b), by another filed in the United States before the invention by the applicant for patent or (2) a patent granted on an application for patent by another filed in the United States before the invention by the applicant for patent, except that an international application filed under the treaty defined in section 351(a) shall have the effects for purposes of this subsection of an application filed in the United States only if the international application designated the United States and was published under Article 21(2) of such treaty in the English language.

Claims 1-11 are rejected under 35 U.S.C. 102(e) as being anticipated by USPN 5,701,451 to Rogers et al. See 90 / 008342, RXOSUB.R (11/27/2006) p. 3-7.

Claims 1-3, 5, and 7-11 are rejected under 35 U.S.C. 102(e) as being anticipated by USPN 6,249,291 B1 to Popp et al. See 90 / 008574, RXOSUB.R (04/03/2007) p. 73-78.

Claim Rejections - 35 USC § 102

(a) the invention was known or used by others in this country, or patented or described in a printed publication in this or a foreign country, before the invention thereof by the applicant for a patent.

Claims 1-5 and 7-11 are rejected under 35 U.S.C. 102(a) as being anticipated by Illustra. The rejections are incorporated by reference to 90/008574, RXOSUB.R (04/03/2007), p. 50-55)

Claims 1-5 and 7-11 are rejected under 35 U.S.C. 102(a) as being anticipated by Clausnitzer. The rejections are incorporated by reference to 90/008574, RXOSUB.R (04/03/2007), p. 61-66)

VI. Conclusion

In order to ensure full consideration of any amendments, affidavits or declarations, or other documents as evidence of patentability, such documents must be submitted in response to this Office action. Submissions after the next Office action, which is intended to be a final action, will be governed by the requirements of 37 CFR 1.116, after final rejection and 37 CFR 41.33 after appeal, which will be strictly enforced.

Any paper filed with the USPTO, i.e., any submission made, by either the Patent Owner or the Third Party Requester must be served on every other party in the reexamination proceeding, including any other third party requester that is part of the proceeding due to merger of the reexamination proceedings. As proof of service, the party submitting the paper to the Office must attach a Certificate of Service to the paper, which sets forth the name and address of the party served and the method of service. Papers filed without the required Certificate of Service may be denied consideration. See 37 CFR 1.550(f)

Please mail any communications to:
Attn: Mail Stop "Ex Parte Reexam"
Central Reexamination Unit
Commissioner for Patents
P. O. Box 1450
Alexandria VA 22313-1450

Please FAX any communications to:
(571) 273-9900
Central Reexamination Unit

Please hand-deliver any communications to:
Customer Service Window

Attn: Central Reexamination Unit
Randolph Building, Lobby Level
401 Dulany Street
Alexandria, VA 22314

Any inquiry concerning this communication or earlier communications from the examiner, or as to the status of this proceeding, should be directed to the Central Reexamination Unit at telephone number (571) 272-7705.

Mary Steelman
Primary Examiner

AU 3992

Conferees:

JOF
ESK

EXHIBIT B

Reexamination	Application/Control No. 90 008342 90008562 (90 008574)	Applicant(s)/Patent Under Reexamination 5,894,554
	Certificate Date	Certificate Number

Requester Correspondence Address: ☐ Patent Owner ☒ Third Party
INTELLECTUAL PROPERTY LAW GROUP LLP 12 SOUTH FIRST STREET SUITE 1205 SAN JOST, CA 95113

LITIGATION REVIEW ☒	MS (examiner initials)	05/23/2008 (date)
Case Name		Director Initials
Parallel Networks, Lic v Priceline.Com, Inc et al 2:08cv45 US Dist Ct TX Eastern OPEN		Lee Feasel for GM
Parallel Networks, Lic v Netflix, Inc et al 2:07cv562 US Dist Ct TX Eastern OPEN		
Epicrealm Licensing, Lic v The Macerich Company 5:07cv181 US Dist Ct TX Eastern Marshall STAYED		
Epicrealm Licensing, LP v Various, Inc 5:07cv135 US Dist Ct TX Eastern Texarkana OPEN		
Epicrealm Licensing, LP v Various, Inc 2:07cv30 US Dist Ct TX Eastern Marshall CLOSED		

COPENDING OFFICE PROCEEDINGS	
TYPE OF PROCEEDING	NUMBER
1. merged	90/008,342 90/008,562 90/008,574
2.	
3.	
4.	

90008562 90008574 90008342

Quinstreet Inc v Parallel Networks, Lic 1:06cv495 US Dist Ct Delaware Wilmington OPEN

Oracle Corporation et al v Epicrealm Licensing, LP 1:06cv414 US Dist Ct Delaware Wilmington OPEN

Epicrealm Licensing, Lic v Franklin Covey Co et al 2:05cv356 US Dist Ct TX Eastern Marshall OPEN

Epicrealm, Licensing, Lic v Speedera Networks, Inc 2:05cv150 US Dist Ct TX Eastern Marshall CLOSED

Epicrealm Licensing Lic v Autoflex Leasing, Inc et al 2:05cv163 US Dist Ct TX Eastern Marshall OPEN

Renhcol Inc v Don Best Sports 2:06cv318 US Dist Ct TX Eastern Marshall DECIDED

Search Notes	Application/Control No.	Applicant(s)/Patent Under Reexamination
	90008574	5894554
	Examiner	Art Unit
	MARY STEELMAN	3992

SEARCHED			
Class	Subclass	Date	Examiner

SEARCH NOTES		
Search Notes	Date	Examiner
Searched Patents listed in IDS	05/27/2008	MS

INTERFERENCE SEARCH			
Class	Subclass	Date	Examiner

EAST Search History

Ref #	Hits	Search Query	DBs	Default Operator	Plurals	Time Stamp
S1	16	("5701451" "5721908" "5742762" "5761673" "6249291" "651108").pn.	US-PGPUB; USPAT; USOCR; FPRS; EPO; JPO; DERWENT; IBM_TDB	OR	OFF	2008/05/27 13:23
S2	12	("5701451" "5721908" "5742762" "5761673" "6249291" "6651108").pn.	US-PGPUB; USPAT; USOCR; FPRS; EPO; JPO; DERWENT; IBM_TDB	OR	OFF	2008/05/27 13:23
S3	2	("6282569").pn.	US-PGPUB; USPAT; USOCR; FPRS; EPO; JPO; DERWENT; IBM_TDB	OR	OFF	2008/05/27 15:42
S4	10	("5701463" "5752246" "5754772" "5774660" "5774668").pn.	US-PGPUB; USPAT; USOCR; FPRS; EPO; JPO; DERWENT; IBM_TDB	OR	OFF	2008/06/10 08:46
S5	49	("4532588" "4831518" "4891785" "4982344" "5005122" "5050071" "5099235" "5187787" "5257369" "5339392" "5371852" "55577985131082" "5163131" "5249290" "5283897" "5287537" "5307490" "5335323" "5341477" "5355453" "5377327" "5418728" "5440744" "5475819" "5485579" "5581552").pn.	US-PGPUB; USPAT; USOCR; FPRS; EPO; JPO; DERWENT; IBM_TDB	OR	OFF	2008/06/10 13:29
S6	6	("5131082" "5371852" "5557798").pn.	US-PGPUB; USPAT; USOCR; FPRS; EPO; JPO; DERWENT; IBM_TDB	OR	OFF	2008/06/10 13:48

EAST Search History

S7	77	("4604710" "4748558" "4774655" "4839798" "5093911" "5455948" "5539883" "5600644" "5655120" "5710918" "5774660" "5867706" "5870604" "6067559" "5179652" "5455948" "5740530" "5742246" "5745754" "5751956" "5753022" "5754772" "5754774" "5761499" "5761663" "5793964" "5812769" "5918228" "6581080" "4973784" "5283897" "5287537" "5335323" "5347632" "5706434" "5724514" "5778367" "5870546" "6006242" "6282569").pn.	US-PGPUB; USPAT; USOCR; FPRS; EPO; JPO; DERWENT; IBM_TDB	OR	OFF	2008/06/10 14:11
S8	2	("6249291").pn.	US-PGPUB; USPAT; USOCR; FPRS; EPO; JPO; DERWENT; IBM_TDB	OR	OFF	2008/06/12 13:05
S9	2	("5701451").pn.	US-PGPUB; USPAT; USOCR; FPRS; EPO; JPO; DERWENT; IBM_TDB	OR	OFF	2008/06/12 13:06
S10	4	("5761673" "5751956").pn.	US-PGPUB; USPAT; USOCR; FPRS; EPO; JPO; DERWENT; IBM_TDB	OR	OFF	2008/06/12 14:45
S11	2	"5751956".pn.	US-PGPUB; USPAT; USOCR; FPRS; EPO; JPO; DERWENT; IBM_TDB	OR	OFF	2008/06/12 17:22

PTO-1449 Information Disclosure Citation in an Application	Application No. 90/008342	Applicant(s) Lowery, et al.	
	Docket Number 066241.0125	Group Art Unit 3992	Filing Date November 27, 2006

U.S. PATENT DOCUMENTS

		DOCUMENT NO.	DATE	NAME	CLASS	SUBCLASS	FILING DATE
MX	C	5,701,451	12/22/97	Rogers, et al.			
MX	F	5,721,908	02/24/98	Lagarde, et al.			
MX	E	5,742,762	04/21/98	Scholl, et al.			
MX	D	5,761,673	06/02/98	Bookman, et al.			
MX	A	6,249,291	06/19/01	Popp, et al.			
MX	B	6,651,108	11/18/03	Popp, et al.			
	G						
	H						
	I						
	J						
	K						
	L						

		DOCUMENT NO.	DATE	COUNTRY	CLASS	SUBCLASS	TRANSLATION YES	TRANSLATION NO
	M							
	N							
	O							
	P							
	Q							

NON-PATENT DOCUMENTS

		DOCUMENT (Including Author, Title, Source, and Pertinent Pages)	DATE
MX	S	Knudson, Richard, "Application Development with Microsoft's Internet Information Server", IMG The Information Management Group; 4 pages; http://www.image.com/IMG/What's+New/2.6.96.htm, 01/20/2006.	
MX	T	"Microsoft SQL Server in the Active Internet", Microsoft Corporation, 7 pages; http://msdn.microsoft.com/archive/en-us/dnarsqlsg/html/msdn_sqlintwp.asp?frame=true, 12/29/2005.	03/12/1996
MX	U	"Oracle® WebServer User's Guide"; Release 1.0, Part No. A34986-2, 1-248 pages. 1995	
MX	V	"head 1.1", 27 pages. 1994	

M. Stutman 6·10·08

EXAMINER: Initial if citation considered, whether or not citation is in conformance with MPEP § 609. Draw line through citation if not in conformance and not considered. Include copy of this form with next communication to the applicant.

p. 1 of 8

PTO-1449 **Information Disclosure Citation in an Application**	Application No. 90/008342	Applicant(s) Lowery, et al.	
	Docket Number 066241.0125	Group Art Unit 3992	Filing Date November 27, 2006

U.S. PATENT DOCUMENTS

		DOCUMENT NO.	DATE	NAME	CLASS	SUBCLASS	FILING DATE
	A						
	B						
	C						
	D						
	E						
	F						
	G						
	H						
	I						
	J						
	K						
	L						
	M						
	N						
	O						

FOREIGN PATENT DOCUMENTS

		DOCUMENT NO.	DATE	COUNTRY	CLASS	SUBCLASS	TRANSLATION YES	TRANSLATION NO
	P							
	Q							
	R							
	S							
	T							

NON-PATENT DOCUMENTS

		DOCUMENT (Including Author, Title, Source, and Pertinent Pages)	DATE
—	U	~~Eichmann, et al. "Integrating Structured Databases Into the Web:~~ The MORE System", 10 pages. date missing	
—	V	~~Dias, et al. "A Scalable and Highly Available Web Server", 8 pages.~~ date Missing	
MJ	W	Derler, Christian, "The World-Wide Web Gateway to Hyper-G: Using a Connectionless Protocol to Access Session-Oriented Services", 105 pages. 1995	
MJ	X	Andrews, et al., "Serving Information to the Web with Hyper-G", Computer Networks and ISDN Systems, Volume 27, No. 6, April 1995, Proc. Third International World-Wide Web Conference, Darmstadt, Germany, April 1995, 1-8 pages.	04/1995
MS	Y	Yeager, et al., "Web Server Technology - The Advanced Guide for World Wide Web Information Providers", ~~15 pages.~~ 1996 43 pages	

EXAMINER	DATE CONSIDERED
M. Pluetzer	6/10/08

EXAMINER: Initial if citation considered, whether or not citation is in conformance with MPEP § 609. Draw line through citation if not in conformance and not considered. Include copy of this form with next communication to the applicant.

p. 2 of 8

PTO-1449 **Information Disclosure Citation in an Application**	Application No. 90/008342	Applicant(s) Lowery, et al.	
	Docket Number 066241.0125	Group Art Unit 3992	Filing Date November 27, 2006

U.S. PATENT DOCUMENTS

		DOCUMENT NO.	DATE	NAME	CLASS	SUBCLASS	FILING DATE
	A						
	B						
	C						
	D						
	E						
	F						
	G						
	H						
	I						
	J						
	K						
	L						
	M						
	N						

FOREIGN PATENT DOCUMENTS

		DOCUMENT NO.	DATE	COUNTRY	CLASS	SUBCLASS	TRANSLATION YES	TRANSLATION NO
	O							
	P							
	Q							
	R							
	S							

NON-PATENT DOCUMENTS

		DOCUMENT (Including Author, Title, Source, and Pertinent Pages)	DATE
—	T	~~"GSQL PROC file commands", 8 pages.~~ date missing	
MJ	U	"GSQL in detail" 4 pages. Dec 1993	
MJ	V	Brown, Mark, "FastCGI: A High-Performance Gateway Interface", Position paper for the workshop "Programming the Web - a search for APIs", Fifth International World Wide Web Conference, 6 May 1996, Paris, France, file://Users/mac17/Desktop/new$20literature/www5-apl-workshop.html, May 2, 1996, pages 1-4. 5	05/02/1996
MJ	W	Luotonen, et al., "World-Wide Web Proxies", 04/1994; pages 1-8.	04/1994
—	X	~~Clausnitzer, et al., "A WWW Interface to the OMNIS/Myriad Literature Retrieval Engine", 12 pages.~~ missing date	

EXAMINER	DATE CONSIDERED
M. Stulman	6/10/08

EXAMINER: Initial if citation considered, whether or not citation is in conformance with MPEP § 609. Draw line through citation if not in conformance and not considered. Include copy of this form with next communication to the applicant.

p. 3 of 8

PTO-1449 **Information Disclosure Citation in an Application**	Application No. 90/008342	Applicant(s) Lowery, et al.	
	Docket Number 066241.0125	Group Art Unit 3992	Filing Date November 27, 2006

U.S. PATENT DOCUMENTS

		DOCUMENT NO.	DATE	NAME	CLASS	SUBCLASS	FILING DATE
	A						
	B						
	C						
	D						
	E						
	F						
	G						
	H						
	I						
	J						
	K						
	L						
	M						
	N						
	O						

							TRANSLATION	
						SUBCLASS	YES	NO
	P							
	Q							
	R							
	S							
	T							

NON-PATENT DOCUMENTS

		DOCUMENT (Including Author, Title, Source, and Pertinent Pages)	DATE
MN	U	Rasmussen, B. F., "WDB - A Web Interface to Sybase", Astronomical Data Analysis Software and Systems IV; ASP Conference Series, Vol. 77, 1995, 1-4 pages..	1995
—	V	~~Gaines, Brian, "Porting Interactive Applications to the Web~~", Knowledge Science Institute; University of Calgary, Alberta, Canada T2N 1N4, pages 1-17. Date Missing	
—	W	~~Shklar, Leon, "Web Access to Legacy Data", Computer Science~~ Department, Rutgers University, New Brunswick, NJ; Bell Communications Research, 445 South St. Morristown, NJ, pages 1-18. Date Missing	
—	X	~~Shklar, Leon, "Web Access to Legacy Data", Computer~~ Science Department, Rutgers University, New Brunswick, NJ; Bell Communications Research, 445 South St. Morristown, NJ, pages 1-10. Date Missing	
MN	Y	"NCSA Mosaic Common Client Interface", version 1.1, 3/31/1995, pages 1-2.	03/31/1995

EXAMINER	DATE CONSIDERED
M. Sheehan	6/10/08

EXAMINER: Initial if citation considered, whether or not citation is in conformance with MPEP § 609. Draw line through citation if not in conformance and not considered. Include copy of this form with next communication to the applicant.

p. 4 of 8

PTO-1449 **Information Disclosure Citation in an Application**	Application No. 90/008342	Applicant(s) Lowery, et al.	
	Docket Number 066241.0125	Group Art Unit 3992	Filing Date November 27, 2006

U.S. PATENT DOCUMENTS

		DOCUMENT NO.	DATE	NAME	CLASS	SUBCLASS	FILING DATE
	A						
	B						
	C						
	D						
	E						
	F						
	G						
	H						
	I						
	J						
	K						
	L						
	M						
	N						

		DOCUMENT NO.	DATE	COUNTRY	CLASS	SUBCLASS	TRANSLATION YES	TRANSLATION NO
	O							
	P							
	Q							
	R							
	S							

NON-PATENT DOCUMENTS

		DOCUMENT (Including Author, Title, Source, and Pertinent Pages)	DATE
—	T	~~Gaffney, John, "Illustra's Web DataBlade Module", An Illustra Technical~~ White Paper, SIGMOD Record, Vol 25, No. 1, March 1996, pages 105-112. duplicate	
MX	U	Garland, et al., "Implementing Distributed Server Groups for the World Wide Web", 25 January 1995, CMU-CS-95-114; pages 1-12.	01/25/1995
MX	V	Lagoze, et al., "Dienst: Implementation Reference Manual", May 5, 1995, pages 1-69.	05/05/1995
—	W	~~Varela, et al., "DB: Browsing Object-Oriented Databases over the Web"~~, pages 1-19. Date missing	
MX	X	Varela, et al., "DB: Browsing Object-Oriented Databases over the Web", http://www.w3.org/Conferences/WWW4/Papers2/282/, 2/20/2006. p1-14	

EXAMINER	DATE CONSIDERED
M. Fletcher	6·10·08

EXAMINER: Initial if citation considered, whether or not citation is in conformance with MPEP § 609. Draw line through citation if not in conformance and not considered. Include copy of this form with next communication to the applicant.

p. 5 of 8

PTO-1449 **Information Disclosure Citation in an Application**	Application No. 90/008342	Applicant(s) Lowery, et al.	
	Docket Number 066241.0125	Group Art Unit 3992	Filing Date November 27, 2006

U.S. PATENT DOCUMENTS

		DOCUMENT NO.	DATE	NAME	CLASS	SUBCLASS	FILING DATE
	A						
	B						
	C						
	D						
	E						
	F						
	G						
	H						
	I						
	J						
	K						
	L						
	M						
	N						

		DOCUMENT NO.	DATE	COUNTRY	CLASS	SUBCLASS	TRANSLATION YES	TRANSLATION NO
	O							
	P							
	Q							
	R							
	S							

NON-PATENT DOCUMENTS

		DOCUMENT (Including Author, Title, Source, and Pertinent Pages)	DATE
MD	T	Stanford-Clark, Andy, "Atlanta Olympics WOMplex", AIXpert Magazine, March 1997, WOMplex, Presented at Get Connected Technical Interchange '96, October 1996, pages 1-12.	1996
—	U	~~Your Window on IBM Innovation Think Research, featured con~~cept "Managing the Web", http://domino.research.ibm.com/comm/wwwr_thingresearch.nsf/pages/wom496.html, pages 1-9. date	
—	V	~~Ingham, et al., "W3Objects: Bringing Object Oriented Techno~~logy to the Web", 16 pages. Date	
—	W	~~Antchev, et al., "A WWW Learning Environment for Mathematics", 8~~ pages. date	
—	X	~~Lin, et al., "Web Access to IBM Legacy Systems Data",~~ 3 pages. date	

EXAMINER	DATE CONSIDERED
/M. Shutman/	6·10·08

EXAMINER: Initial if citation considered, whether or not citation is in conformance with MPEP § 609. Draw line through citation if not in conformance and not considered. Include copy of this form with next communication to the applicant.

p. 6 of 8

PTO-1449 **Information Disclosure Citation in an Application**	Application No. 90/008342	Applicant(s) Lowery, et al.	
	Docket Number 066241.0125	Group Art Unit 3992	Filing Date November 27, 2006

U.S. PATENT DOCUMENTS

		DOCUMENT NO.	DATE	NAME	CLASS	SUBCLASS	FILING DATE
	A						
	B						
	C						
	D						
	E						
	F						
	G						
	H						
	I						
	J						
	K						
	L						
	M						
	N						

		DOCUMENT NO.	DATE	COUNTRY	CLASS	SUBCLASS	TRANSLATION YES	TRANSLATION NO
	O							
	P							
	Q							
	R							
	S							

NON-PATENT DOCUMENTS

		DOCUMENT (Including Author, Title, Source, and Pertinent Pages)	DATE
MS	T	Hunter, et al., "SWOOP: An application generator for ORACLE/WWW systems.", http:www.w3.org/Conferences/WWW4/Papers/207/, 2/15/2006, pages 1-16.	
—	U	~~Yeager, et al., "Web Server Technology", The Advanced~~ Guide for World Wide Web Information Providers, 43 pages. P 1-15 missing 16-43 date ?	
MX	V	Brown, Mark, "FastCGI: A High-Performance Gateway Interface, pages 1-4. May 1996	
MX	W	Illustra "Illustra's Web DataBlade Module", SIGMOD Record, Volume 25, No. 1, March 1996, 8 pages.	
MX	X	Brown, Mark, "FastCGI: A High-Performance Gateway Interface", 2 May 1996, 5 pages.	

EXAMINER	DATE CONSIDERED
M. Stelzner	6·10·2008

EXAMINER: Initial if citation considered, whether or not citation is in conformance with MPEP § 609. Draw line through citation if not in conformance and not considered. Include copy of this form with next communication to the applicant.

8 of 8

PTO-1449 **Information Disclosure Citation in an Application**	Application No. 90/008342	Applicant(s) Lowery, et al.	
	Docket Number 066241.0125	Group Art Unit 3992	Filing Date November 27, 2006

U.S. PATENT DOCUMENTS

		DOCUMENT NO.	DATE	NAME	CLASS	SUBCLASS	FILING DATE
	A						
	B						
	C						
	D						
	E						
	F						
	G						
	H						
	I						
	J						
	K						
	L						
	M						
	N						

		DOCUMENT NO.	DATE	COUNTRY	CLASS	SUBCLASS	TRANSLATION YES	TRANSLATION NO
	O							
	P							
	Q							
	R							
	S							

NON-PATENT DOCUMENTS

		DOCUMENT (Including Author, Title, Source, and Pertinent Pages)	DATE
MK	T	"GSQL - a Mosaic-SQL gateway", et seq., 66 pages. 1993	
	U		
	V		
	W		
	X		

EXAMINER	DATE CONSIDERED
M. Shelton	6.10.08

EXAMINER: Initial if citation considered, whether or not citation is in conformance with MPEP § 609. Draw line through citation if not in conformance and not considered. Include copy of this form with next communication to the applicant.

p. 8 of 8

PTO-1449 Information Disclosure Citation in an Application	Application No. 90/008342	Applicant(s) Lowery, et al.	
	Docket Number 066241.0125	Group Art Unit 3992	Filing Date November 27, 2006

U.S. PATENT DOCUMENTS

		DOCUMENT NO.	DATE	NAME	CLASS	SUBCLASS	FILING DATE
MM	A	6,282,569	08/28/2001	Wallis, et al.	709	224	06-03-97
	B						
	C						
	D						
	E						
	F						
	G						
	H						
	I						
	J						
	K						
	L						

		DOCUMENT NO.	DATE	COUNTRY	CLASS	SUBCLASS	TRANSLATION YES	TRANSLATION NO
	M							
	N							
	O							

NON-PATENT DOCUMENTS

		DOCUMENT (Including Author, Title, Source, and Pertinent Pages)	DATE
—	P	~~Wessels, Duane, "Intelligent Caching for World-Wide~~ Web Objects", Thesis, 1995, 85 pages. See 1053 Wessels 93 p	1995
—	Q	~~Wessels, Duane, "Intelligent Caching~~ for World-Wide Web Objects", Thesis, 1995, 85 pages. duplicate see above	1995
—	R	~~Yang, et al., "An Architecture for Integ~~rating OODBs with WWW', Journal Reference: *Computer Networks and ISDN* Systems, Volume 28, Issues 7-11, p. 1243. mhtml:file://L:\GCL%20clients/76684-Pink%20Sheets/Temp/An%20Architecture%20for..." 2/15/2006 15 pages. duplicate See 1053	2/15/2006

M. Steelman 6-10-2008

EXAMINER: Initial if citation considered, whether or not citation is in conformance with MPEP § 609. Draw line through citation if not in conformance and not considered. Include copy of this form with next communication to the applicant.

PTO-1449 **Information Disclosure Citation in an Application**	Application No. 90/008342	Applicant(s) Lowery, et al.	
	Docket Number 066241.0125	Group Art Unit 3992	Filing Date November 27, 2006

U.S. PATENT DOCUMENTS

		DOCUMENT NO.	DATE	NAME	CLASS	SUBCLASS	FILING DATE
	A						
	B						
	C						
	D						
	E						
	J						

FOREIGN PATENT DOCUMENTS

		DOCUMENT NO.	DATE	COUNTRY	CLASS	SUBCLASS	TRANSLATION YES	TRANSLATION NO
	K							
	L							
	M							

NON-PATENT DOCUMENTS

		DOCUMENT (Including Author, Title, Source, and Pertinent Pages)	DATE
—	N	~~Stanford Clark, "Atlanta Olympics WOMplex~~", Presented at Get Connected Technical Interchange '96, IBM Hursley U.K., October 1996; *AIXpert Magazine*, March 1997, WOMplex, pages IBM 000026-000037. duplicate - see ids 1	10/1996
—	O	~~http://www.fastcgi.com/cvs/mod_fast~~cgi/CHANGES; pages 1-13. Missing document	
—	P	~~http://www.fastcgi.com/cvs/mo~~d_fastcgi/CHANGES; pages 1-13. duplicate see above	
—	Q	~~Mallery, John, "A Common LISP Hyperme~~dia Server", May 5, 1994, *Proceedings of the First International Conference on The World-Wide Web*, Geneva: CERN May 25, 1994, mhtml:file://L:\GCL%20clients/76684-Pink%20Sheets/Temp/Common%20LISP%20Hype....." 2/15/2006, pages 1-8. duplicate see ids 3	05/05/1994
MA	R	Fifth International World-Wide Web Conference, May 6-10, 1996, Paris France, mhtml:file://L:]GCL%20clients/76684-Pint%20Sheets/Temp/Contents%20WWW5.mht, 02/15/2006, pages 1-6.	
—	S	~~Brown, Mark, "Fast CGI: A High-Performa~~nce Gateway Interface", Position paper for the workshop "Programming the Web - a search for APIs", Fifth International World Wide Web Conference, 6 May 1996, ~~16~~ pages. 5 + ArLitt duplicate see below	5/2/1996
—	T	~~Brown, Mark, "Fast CGI: A High-Performa~~nce Gateway Interface", Position paper for the workshop "Programming the Web - a search for APIs", Fifth International World Wide Web Conference, 6 May 1996, 4 pages. duplicate See IDS #1	5/2/196
MA	U	Brown, Mark, "Fast CGI: A High-Performance Gateway Interface", Position paper for the workshop "Programming the Web - a search for APIs", Fifth International World Wide Web Conference, 6 May 1996, 5 pages.	5/2/1996
—	V	~~Brown, Mark, "Fast CGI: A High-Performance Ga~~teway Interface", Position paper for the workshop "Programming the Web - a search for APIs", Fifth International World Wide Web Conference, 6 May 1996, pages 1-5. duplicate see ids1	5/2/1996
—	W	~~Brown, Mark, "FastCGI Developer's Kit", http://www.~~openmarket.com/$ID: fcgi-devel-kit.htm, v 1.6 2002/02/25 00:42:59 robs Exp$, June 11, 1996, pages 1-10. duplicate see below	06/11/1996

EXAMINER	DATE CONSIDERED
M. Steelman	6·10·2008

EXAMINER: Initial if citation considered, whether or not citation is in conformance with MPEP § 609. Draw line through citation if not in conformance and not considered. Include copy of this form with next communication to the applicant.

PTO-1449 **Information Disclosure Citation in an Application**	Application No. 90/008342	Applicant(s) Lowery, et al.	
	Docket Number 066241.0125	Group Art Unit 3992	Filing Date November 27, 2006

U.S. PATENT DOCUMENTS

		DOCUMENT NO.	DATE	NAME	CLASS	SUBCLASS	FILING DATE
	A						
	B						
	C						
	D						
	E						
	F						
	G						
	H						
	I						
	J						

FOREIGN PATENT DOCUMENTS

		DOCUMENT NO.	DATE	COUNTRY	CLASS	SUBCLASS	TRANSLATION YES	TRANSLATION NO
	K							
	L							
	M							
	N							

NON-PATENT DOCUMENTS

		DOCUMENT (Including Author, Title, Source, and Pertinent Pages)	DATE
MA	O	Brown, Mark, "FastCGI Developer's Kit", http://www.openmarket.com/$ID: fcgi-devel-kit.htm, v 1.6 2002/02/25 00:42:59 robs Exp$, June 11, 1996, pages 1-10.	06/11/1996
—	P	~~"Fast CGI", FastCGI Home, http://www.fastcgi.com/, page~~ 1-3. No date	
—	Q	~~"Fast CGI", FastCGI Home, http://www.fastcgi.com/, page~~ 1-3. no date duplicate of above	
—	R	~~"Open Market FastCGI 1.0", Programmer's Guide,~~ April 15, 1996 s p/n 42-10530-001 Rev. A, http://www.fastcgi.com/devkit/doc/fastcgi-prog-g..., 30 pages. missing documents	
—	S	~~"Open Market FastCGI 1.0", Programmer's Guide, April~~ 15, 1996 s p/n 42-10530-001 Rev. A, http://www.fastcgi.com/devkit/doc/fastcgi-prog-g...,30 pages. duplicate see above	
—	T	~~"FastCGI Specification", Document Version: 1.0,~~ April 29, 1996, http://ww.fastcgi.com/devkit/doc/fcgi-spec.html, $Id: fcgi-spec.html, V 1.4 2002/02/25 00:42:59 robs Exp $ pages 1-18. missing document	04/29/1996
—	U	~~"FastCGI Specification", Document Version: 1.0, April 29,~~ 1996, http://ww.fastcgi.com/devkit/doc/fcgi-spec.html, $Id: fcgi-spec.html, V 1.4 2002/02/25 00:42:59 robs Exp $ pages 1-18. duplicate see above	04/29/1996
—	V	~~$Id: fcgi.h,v 1.42 2002/09/22 16:49:34 robs Exp$ 10 pages.~~ missing document	
—	W	~~$Id: fcgi.h,v 1.42 2002/09/22 16:49:34 robs Exp$ 10 pages.~~ duplicate see above	
—	X	~~$Id fcgi_buf.c, v 1.16 2002/10/22 01:02:18 robs Exp $~~ pages. missing document	

EXAMINER	DATE CONSIDERED
M. Stalma	6-10-2008

EXAMINER: Initial if citation considered, whether or not citation is in conformance with MPEP § 609. Draw line through citation if not in conformance and not considered. Include copy of this form with next communication to the applicant.

PTO-1449 **Information Disclosure Citation in an Application**	Application No. 90/008342	Applicant(s) Lowery, et al.	
	Docket Number 066241.0125	Group Art Unit 3992	Filing Date November 27, 2006

U.S. PATENT DOCUMENTS

		DOCUMENT NO.	DATE	NAME	CLASS	SUBCLASS	FILING DATE
	A						
	B						
	C						
	D						
	E						
	F						
	G						
	H						
	I						

							TRANSLATION	
						SUBCLASS	YES	NO
	J							
	K							
	L							

NON-PATENT DOCUMENTS

		DOCUMENT (Including Author, Title, Source, and Pertinent Pages)	DATE
—	M	~~$Id fcgi_buf.c, v 1.16 2002/10/22 01.02.18 robs Exp $~~ pages. Duplicate see above	
—	N	~~$Id: fcgi_config.c, v 1.46 2002/12/23 03.13.15 robs Exp $~~ 19 pages. missing document	
—	O	~~$Id: fcgi_config.c, v 1.46 2002/12/23 03:13:15 robs Exp $ 19~~ pages. Duplicate see above	
—	P	~~$Id: fcgi_pm.c, v 1.84 2003/01/19 16:33:51 robs Exp$ 3~~1 pages. missing document	
—	Q	~~$Id: fcgi_pm.c, v 1.84 2003/01/19 16.33.51 robs Exp~~$ 31 pages. Duplicate see above	
—	R	~~$Id: fcgi_protocol.c, v 1.24 2002/10/22 01:02:18 robs Exp$~~ 8 pages. missing document	
—	S	~~$Id: fcgi_protocol.h, v 1.1 1999/02/09 03:08:02 roberts Exp$~~ 2 pages. missing document	
—	T	~~$Id: fcgi_protocol.c, v 1.24 2002/10/22 01:02:18 robs Exp$ 8~~ pages. Duplicate see above	
—	U	~~$Id: fcgi_protocol.h, v 1.1 1999/02/09 03:08:02 roberts Exp$ 2~~ pages. Duplicate see above	
—	V	$Id: fcgi_util.c, v 1.29 2002/10/22 02:44:15 robs Exp$ 8 pages. missing document	

EXAMINER	DATE CONSIDERED
M. Shelton	6-10-2008

EXAMINER: Initial if citation considered, whether or not citation is in conformance with MPEP § 609. Draw line through citation if not in conformance and not considered. Include copy of this form with next communication to the applicant.

PTO-1449 **Information Disclosure Citation in an Application**	Application No. 90/008342	Applicant(s) Lowery, et al.	
	Docket Number 066241.0125	Group Art Unit 3992	Filing Date November 27, 2006

U.S. PATENT DOCUMENTS

		DOCUMENT NO.	DATE	NAME	CLASS	SUBCLASS	FILING DATE
	A						
	B						
	C						
	G						
	H						
	I						
	J						

		DOCUMENT NO.	DATE	COUNTRY	CLASS	SUBCLASS	TRANSLATION YES	TRANSLATION NO
	K							
	L							
	M							
	N							
	O							

NON-PATENT DOCUMENTS

		DOCUMENT (Including Author, Title, Source, and Pertinent Pages)	DATE
—	P	~~$Id: fegi_util.c, v 1.29 2002/10/22 02.44.15 robs Exp$ 8 pages.~~ Duplicate see above	
—	Q	~~Google Groups, webrex Chuck Swiger,~~ MISSING doc http://groups.google.com/groups?hl=en&q=webrex+Chuck+Swiger, 9/27/2005, 350 pages.	
—	R	~~Google Search for "webrex drew.trieger",~~ MISSING doc http://groups.google.com/groups?hl=en&q=webrex+drew+trieger&qt_s=Search (1 of 2), 9/27/2005, pages 1-65.	
—	S	~~Google Search for "webrex linus upson~~"; MISSING doc http://groups.google.com/groups?hl=en&q=webrex+linus+upson(1 of 2), 9/27/2005, 1-77 pages.	9/27/2005
—	T	~~Google Groups, webrex ted Shelton, http~~://groups.google.com/groups?hl=en&q=webrex+ted+shelton, 9/27/2005, 279 pages. MISSING doc	
—	U	~~Anita Osterhaug, Editor, "Guide to Par~~allel Programming on Sequent Computer Systems", Second Edition, 181 pages. 1989 missing doc of 181 pages	
MM	V	Anita Osterhaug, Editor, "Guide to Parallel Programming on Sequent Computer Systems", Second Edition, 24 pages. 1989	
—	W	~~*** Apache FastCGI Module Installation~~ ***, 1 page. NO DATE	

EXAMINER	DATE CONSIDERED
M. Hartman	6·10·2008

EXAMINER: Initial if citation considered, whether or not citation is in conformance with MPEP § 609. Draw line through citation if not in conformance and not considered. Include copy of this form with next communication to the applicant.

PTO-1449 **Information Disclosure Citation in an Application**	Application No. 90/008342	Applicant(s) Lowery, et al.	
	Docket Number 066241.0125	Group Art Unit 3992	Filing Date November 27, 2006

U.S. PATENT DOCUMENTS

		DOCUMENT NO.	DATE	NAME	CLASS	SUBCLASS	FILING DATE
	A						
	B						
	C						
	D						
	E						
	F						
	J						
	K						
	L						
	M						
	N						

FOREIGN PATENT DOCUMENTS

		DOCUMENT NO.	DATE	COUNTRY	CLASS	SUBCLASS	TRANSLATION YES	TRANSLATION NO
	O							
	P							
	Q							
	R							
	S							

NON-PATENT DOCUMENTS

		DOCUMENT (Including Author, Title, Source, and Pertinent Pages)	DATE
—	T	~~*** Apache FastCGI Module Installation~~ **, 1 page. duplicate of above + no date	
—	U	~~*** Apache FastCGI Module Installation~~ *** 4 pages. No date	
—	V	~~*** Apache FastCGI Module Installation~~ *** 4 pages. duplicate + No date	
—	U	~~This FastCGI application library source and~~ object code 1 page. No date	
—	W	~~This FastCGI application library source and~~ object code 1 page. No date duplicate	
—	X	~~http://www.pkix.net/~chuck/WebRex/BLANK~~ PAGE 1 page. No date	
MX	Y	Goldszmidt, et al., "Load Distribution for Scalable Web Servers: Summer Olympics 1996 - A Case Study", 10 pages. 1996	
—	Z	~~This is a place holder 1 page.~~ No date	

EXAMINER	DATE CONSIDERED
M. Shukla	6/10/2008

EXAMINER: Initial if citation considered, whether or not citation is in conformance with MPEP § 609. Draw line through citation if not in conformance and not considered. Include copy of this form with next communication to the applicant.

page 6 of 11

PTO-1449 **Information Disclosure Citation in an Application**	Application No. 90/008342	Applicant(s) Lowery, et al.	
	Docket Number 066241.0125	Group Art Unit 3992	Filing Date November 27, 2006

U.S. PATENT DOCUMENTS

		DOCUMENT NO.	DATE	NAME	CLASS	SUBCLASS	FILING DATE
	A						
	B						
	C						
	D						
	E						
	F						
	G						
	H						
	I						
	J						
	K						
	L						

		DOCUMENT NO.	DATE	COUNTRY	CLASS	SUBCLASS	TRANSLATION YES	TRANSLATION NO
	M							
	N							
	O							
	P							
	Q							

NON-PATENT DOCUMENTS

		DOCUMENT (Including Author, Title, Source, and Pertinent Pages)	DATE
—	R	~~# Makefile for Apache2 1 page~~ No date	
—	S	~~#Makefile tmpl for the mod_fastcgi module 1 page.~~ No date	
—	T	~~This is a place holder 1 page.~~ No Date	
—	U	~~# Makefile for Apache2 1 page~~ No date	
—	V	~~#Makefile.tmpl for the mod_fastcgi module 1~~ page. No date	
—	W	~~# this is used/needed by the APACHE2 build system~~ 1 page. No date	
—	X	~~# this is used/needed by the APACHE2 build system 1 page.~~ No date	
—	Y	~~mod_fastcgi.c -- 43 pages~~ dup see below	

M. Slattery 6.10.2008

EXAMINER: Initial if citation considered, whether or not citation is in conformance with MPEP § 609. Draw line through citation if not in conformance and not considered. Include copy of this form with next communication to the applicant.

PTO-1449 **Information Disclosure Citation in an Application**	Application No. 90/008342	Applicant(s) Lowery, et al.	
	Docket Number 066241.0125	Group Art Unit 3992	Filing Date November 27, 2006

U.S. PATENT DOCUMENTS

		DOCUMENT NO.	DATE	NAME	CLASS	SUBCLASS	FILING DATE
	A						
	B						
	C						
	D						
	E						
	F						
	G						
	H						
	I						
	J						
	K						

FOREIGN PATENT DOCUMENTS

		DOCUMENT NO.	DATE	COUNTRY	CLASS	SUBCLASS	TRANSLATION YES	TRANSLATION NO
	L							
	M							
	N							
	O							
	P							

NON-PATENT DOCUMENTS

		DOCUMENT (Including Author, Title, Source, and Pertinent Pages)	DATE
MH	Q	$Id: mod_fastcgi.h, v 1.45 2003/01/19 16:36:49 robs Exp $ 4 pages. Code # Sec Before About	
MH	R	mod_fastcgi.c – 43 pages. 12-23-02 Code —	
MH	S	$Id: mod_fastcgi.h, v 1.45 2003/01/19 16:36:49 robs Exp $ 4 pages. #Idle seconds	
MH	T	Google Groups: comp.sys.next.advocacy, PC Week calls Rhapsody an IT Turkey", page 1-5, http://groups.google.com/group/comp.sys.next.advocacy/tree/browse_frm/thread/cb93D23 ..., 9/27/2005,.	
MH	U	Google Groups: comp.sys.next.advocacy, Tim O'Reilly's Salon article and WebObjects, pages 1-7, http://groups.google.com/group/comp.sys.next.advocacy/tree/browse_frm/thread/ab93Ele9..., 9/27/2005.	
MH	V	Google Groups: comp.sys.next.software, Webobjects & Linus, page 1-2, http://groups.google.com/group/comp.sys.next.software/tree/browse_frm/thread/d5a0c0d9 ..., 9/27/2005.	
MH	W	"The Solaris Network Cache and Accelerator", A Technical White Pager, 16 pages. 2002	

EXAMINER	DATE CONSIDERED
M. Alstrum	6/10/2008

EXAMINER: Initial if citation considered, whether or not citation is in conformance with MPEP § 609. Draw line through citation if not in conformance and not considered. Include copy of this form with next communication to the applicant.

PTO-1449 **Information Disclosure Citation in an Application**	Application No. 90/008342	Applicant(s) Lowery, et al.	
	Docket Number 066241.0125	Group Art Unit 3992	Filing Date November 27, 2005

U.S. PATENT DOCUMENTS

		DOCUMENT NO.	DATE	NAME	CLASS	SUBCLASS	FILING DATE
	A						
	B						
	C						
	D						
	E						
	F						
	G						
	H						
	I						
	J						
	K						
	L						
	M						
	N						

FOREIGN PATENT DOCUMENTS

		DOCUMENT NO.	DATE	COUNTRY	CLASS	SUBCLASS	TRANSLATION YES	TRANSLATION NO
	O							
	P							
	Q							
	R							
	S							

NON-PATENT DOCUMENTS

		DOCUMENT (Including Author, Title, Source, and Pertinent Pages)	DATE
MN	T	02 gateway, Frommamou@02tech.fr Thu Oct 6 09:13:16 1994, pages 1-2, mhtml:file://L:/GCL%20clients/76684-Pink%20Sheets/Temp/02%20gateway.mht, 2/15/2006,.	
MN	U	Edwards, Nigel, ANSA Phase III, "Object Wrapping for the WWW", APM.1494.01, May 23, 1995, 22 pages.	5/23/1995
MN	V	Black, et al., "Objects to the rescue! or httpd: the next generation operating system", 5 pages. 1994	
MS	W	Dossick, Stephen, "OzWeb: Interfacing the Oz System to the World Wide Web", December 20, 1995, 12 pages.	12/20/1995
—	X	~~The Common Gateway Interface Specification "The CGI Specification"~~, http://hoohoo.ncsa.uiuc.edu/cgi/interface.html, 1 page. dup - see below + missing date	

EXAMINER	DATE CONSIDERED
M Hunter	6·10·2008

EXAMINER: Initial if citation considered, whether or not citation is in conformance with MPEP § 609. Draw line through citation if not in conformance and not considered. Include copy of this form with next communication to the applicant.

PTO-1449 **Information Disclosure Citation in an Application**	Application No. 90/008342	Applicant(s) Lowery, et al.	
	Docket Number 066241.0125	Group Art Unit 3772	Filing Date November 27, 2006

U.S. PATENT DOCUMENTS

		DOCUMENT NO.	DATE	NAME	CLASS	SUBCLASS	FILING DATE
	A						
	B						
	C						
	D						
	E						
	F						
	G						
	H						
	I						
	J						
	K						
	L						

							TRANSLATION	
						SUBCLASS	YES	NO
	M							
	N							

NON-PATENT DOCUMENTS

		DOCUMENT (Including Author, Title, Source, and Pertinent Pages)	DATE
—	O	The ~~Common Gateway Interface Specification "The CGI Specification"~~, http://hoohoo.ncsa.uiuc.edu/cgi/interface.html, 1 page. date missing	
—	P	~~SOFTWARE: WebRex Database Server for Free~~ download, "Software: WebRex Database Server for Free download", page 1-2, http://axion-gw.ee.uec.ac.jp/japanese/link/Resources/www/WebRex.html, 9/23/2005. dup - see below	
MJ	Q	Google Groups: comp.sys.next.announce, Press Release: IT Solutions offers FREE Demonstration copies of WebRex for the WWW, pages 1-3, http://groups.google.com/group/comp.sys.next.announce/tree/browse_frm/thread/d5809bc... 9/27/2005.	
MJ	R	"Google Groups: comp.infosystems.www.announce,Software: WebRex Database Server for Free download, pages 1-2, http://groups.google.com/group/comp.infosystems.www.announce/tree/browse_frm/thread... 9/27/2005.	
MJ	S	"Think Your Window on IBM Innovation Research - Featured Concept Managing the Web", pages 1-9, http://domino.research.ibm.com/comm/wwwr_thingresearch.nsf/pages/wom496.html, 1/5/2004.	
—	T	"~~Think Your Window on IBM Innovation Research -~~Featured Concept Managing the Web", pages 1-9, http://domino.research.ibm.com/comm/wwwr_thingresearch.nsf/pages/wom496.html, 1/5/2004. duplicate	
—	U	~~Understanding Fast CGI Application Performance,~~ http://www.fastcgi.com/devkit/doc/fcgi-perf.htm, Brown, Mark, "FastCGI Understanding FastCGI Application Performance", June 10, 1996, pages 1-7. duplicate	

EXAMINER	DATE CONSIDERED
M. Steuber	6·10·2008

EXAMINER: Initial if citation considered, whether or not citation is in conformance with MPEP § 609. Draw line through citation if not in conformance and not considered. Include copy of this form with next communication to the applicant.

PTO-1449 **Information Disclosure Citation in an Application**	Application No. 90/008342	Applicant(s) Lowery, et al.	
	Docket Number 066241.0125	Group Art Unit 3992	Filing Date November 27, 2006

U.S. PATENT DOCUMENTS

		DOCUMENT NO.	DATE	NAME	CLASS	SUBCLASS	FILING DATE
	A						
	B						
	C						
	D						
	E						
	F						
	G						
	H						
	I						
	J						
	K						
	L						
	M						
	N						

		DOCUMENT NO.	DATE	COUNTRY	CLASS	SUBCLASS	TRANSLATION YES	TRANSLATION NO
	O							
	P							
	Q							
	R							

NON-PATENT DOCUMENTS

		DOCUMENT (Including Author, Title, Source, and Pertinent Pages)	DATE
MX	S	Understanding Fast CGI Application Performance, http://www.fastcgi.com/devkit/doc/fcgi-perf.htm, Brown, Mark, "FastCGI Understanding FastCGI Application Performance", June 10, 1996, pages 1-7.	
MX	T	WWW Access to Legacy Client/Server Applications, Dossick, et al., "WWW Access to Legacy Client/Server Applications", page 1-13, mhtml:file://L:\GCL%20clients/76684-Pink%20Sheets/Temp/WWW%20Access%20 to%2..., 2/15/2006.	
	U		
	V		
	W		
	X		

EXAMINER	DATE CONSIDERED
M. Shukla	6·10·2008

EXAMINER: Initial if citation considered, whether or not citation is in conformance with MPEP § 609. Draw line through citation if not in conformance and not considered. Include copy of this form with next communication to the applicant.

90 008342 90 008574 90 008562

IDS 3

PTO-1449 **Information Disclosure Citation in an Application**	Application No. 90/008342	Applicant(s) Lowery, et al.	
	Docket Number 066241.0125	Group Art Unit 3992	Filing Date November 27, 2006

U.S. PATENT DOCUMENTS

		DOCUMENT NO.	DATE	NAME	CLASS	SUBCLASS	FILING DATE
MA	F	4,532,588	07/30/85	Foster			
MA	G	4,831,518	05/16/89	Yu, et al.			
MA	H	4,891,785	01/02/90	Donohoo			
MA	I	4,982,344	01/01/91	Jordan			
MA	J	5,005,122	04/02/91	Griffin, et al.			
MA	K	5,050,071	09/17/91	Harris, et al.			
MA	L	5,099,235	03/24/92	Crookshanks			
MA	B	5,187,787	02/16/93	Skeen, et al.			
MA	D	5,257,369	10/26/93	Skeen, et al.			
MA	E	5,339,392	08/16/94	Risberg, et al.			
MA	A	5,371,852	12/6/94	Attanasio, et al.			
MA	C	5,557,798	09/17/96	Skeen, et al.			

		DOCUMENT NO.	DATE	COUNTRY	CLASS	SUBCLASS	TRANSLATION YES	TRANSLATION NO
	M							
	N							
	O							
	P							
	Q							

NON-PATENT DOCUMENTS

		DOCUMENT (Including Author, Title, Source, and Pertinent Pages)	DATE
copy not on file	S	~~W3Objects, "WebObjects: Moving Towards an Object-Oriented Web", ANSA Technical~~ Committee Meeting, Cambridge, May 1995, http://w3objects.ncl.ac.uk/pres/ansa95/html/, pages 1-12.	05/1995
		~~W3Objects, "WebObjects: Moving Towards an Object-Oriented Web"~~, ANSA Technical Committee Meeting, Cambridge, May 1995, pages 1-12. duplicate see above	05/1995
	T	~~Fox, et al., "WebWork: Integrated Programming Environment Tools~~ for National and Grand Challenges", Joint Boston-CSC-NPAC Project Plan to Develop WebWork, June 14, 1995, pages 1-21.	06/14/1995
	U	~~Frank, Maurice, "Internet Systems, Online Strategies for IS Professionals"~~, http://www.dbmsmag.com/9605i03.html, 2/20/2006, pages 1-11.	
	V	~~Frank, Maurice, "Internet Systems, Online Strategies for IS Professionals", 13 pages.~~ NO DATE Duplicate of above?	

M. Steelman 6·10·2008

EXAMINER: Initial if citation considered, whether or not citation is in conformance with MPEP § 609. Draw line through citation if not in conformance and not considered. Include copy of this form with next communication to the applicant.

PTO-1449 **Information Disclosure Citation in an Application**	Application No. 90/008342	Applicant(s) Lowery, et al.	
	Docket Number 066241.0125	Group Art Unit 3992	Filing Date November 27, 2006

U.S. PATENT DOCUMENTS

		DOCUMENT NO.	DATE	NAME	CLASS	SUBCLASS	FILING DATE
MM	A	5,131,082	07/14/92	Bonevento, et al.			
MM	B	5,163,131	11/10/92	Row, et al.			
MM	C	5,249,290	09/28/93	Heizer			
MM	D	5,283,897	02/01/94	Georgiadis, et al.			
MM	E	5,287,537	02/15/94	Newmark, et al.			
MM	F	5,307,490	04/26/94	Davidson, et al.			
MM	G	5,335,323	08/02/94	Kolnick			
MM	H	5,341,477	08/23/94	Pitkin, et al.			
MM	I	5,355,453	10/11/94	Row, et al.			
MM	J	5,377,327	12/27/94	Jain, et al.			
MM	K	5,418,728	05/23/95	Yada			
MM	L	5,440,744	08/08/95	Jacobson, et al.			
MM	M	5,475,819	12/12/95	Miller, et al.			
MM	N	5,485,579	01/16/96	Hitz,et al.			
MM	O	5,581,552	12/03/96	Civanlar, et al.			

FOREIGN PATENT DOCUMENTS

		DOCUMENT NO.	DATE	COUNTRY	CLASS	SUBCLASS	TRANSLATION YES	TRANSLATION NO
	R							
	S							
	T							

NON-PATENT DOCUMENTS

		DOCUMENT (Including Author, Title, Source, and Pertinent Pages)	DATE
	U	~~Perrochon, et al., "IDLE: Unified W3 Access to Interactive Information Servers", 12 pages.~~	
	V	~~Rees, et al., "A Web of Distributed Objects", http://www.w3.org/Conferences/WWW4/Papers/85/, 2/20/2006,~~ pages 1-15.	
—	W	~~"Rees, et al., "A Web of Distributed Objects"~~, http://www.w3journal.com/1/rtor.085/papers/085.html; pages 1-16. No date	
—	X	~~Rees, Owen, "ANSAweb: A Web of Distributed Objects", APM.~~1763.01, April 23, 1996, ~~17~~ 16 pages. half scanned pages - bad copy	04/23/1996
—	Y	~~Rees, et al., "A Web of Distributed Objects",~~ 19 pages. No date	

copy not on file

EXAMINER	DATE CONSIDERED
M. Steelman	6·10·2008

EXAMINER: Initial if citation considered, whether or not citation is in conformance with MPEP § 609. Draw line through citation if not in conformance and not considered. Include copy of this form with next communication to the applicant.

PTO-1449

Information Disclosure Citation in an Application

Application No.	Applicant(s)	
90/008342	Lowery, et al.	
Docket Number	**Group Art Unit**	**Filing Date**
066241.0125	3992	November 27, 2006

U.S. PATENT DOCUMENTS

		DOCUMENT NO.	DATE	NAME	CLASS	SUBCLASS	FILING DATE
MX	H	4,604,710	08/05/86	Amezcua, et al.			
MX	C	4,748,558	05/31/88	Hirosawa, et al.			
MX	J	4,774,655	09/27/88	Kollin, et al.			
MX	E	4,839,798	06/13/89	Eguchi, et al.			
MX	M	5,093,911	03/03/92	Parks, et al.			
MX	N	5,455,948	10/03/95	Poole, et al.			
MX	F	5,539,883	07/23/96	Allon, et al.			
MX	A	5,600,644	02/04/97	Chang, et al.			
MX	B	5,655,120	08/05/97	Witte, et. al.			
MX	K	5,710,918	01/20/98	Legarde, et al.			
MX	I	5,774,660	06/30/98	Brendel, et al.			
MX	L	5,867,706	02/02/99	Martin, et al.			
MX	D	5,870,604	02/09/99	Yamagishi			
MX	G	6,067,559	05/23/2000	Allard, et al.			

FOREIGN PATENT DOCUMENTS

	DOCUMENT NO.	DATE	COUNTRY	CLASS	SUBCLASS	TRANSLATION YES	TRANSLATION NO
O							
P							
Q							
R							
S							

NON-PATENT DOCUMENTS

	DOCUMENT (Including Author, Title, Source, and Pertinent Pages)	DATE
—	~~"E-Commerce: The Second Wave Fifth Annual Edition"~~, Chapter 8: Web Server Hardware and Software, 44 pages. No date full page not scanned	
MX	Keller, et al., "A predicate-based caching scheme for client-server database architectures", The VLDB Journal (1996) pages 35-47.	
—	~~Burkowski, et al., "Delivery of Electronic News: A Broadband Application", pages 1-5.~~ date missing	
—	~~Cahoon, et al., "Performance Analysis of Distributed Information Retrieval Architectures"~~, Department of Computer Science, University of Massachusetts, June 7, 1995, pages 1-23.	06/07/1995
—	~~Mann, et al., "A Coherent Distributed File Cache with Directory~~ Write-Behind", ACM Transactions on Computer Systems, Vol. 12, No. 2, May 1994, Pages 123-164.	05/1994

copy not on file

copy not on file

EXAMINER [signature]

DATE CONSIDERED 6-10-2008

EXAMINER: Initial if citation considered, whether or not citation is in conformance with MPEP § 609. Draw line through citation if not in conformance and not considered. Include copy of this form with next communication to the applicant.

DAL01:952278.1

3 of 37

PTO-1449 **Information Disclosure Citation in an Application**	Application No. 90/008342	Applicant(s) Lowery, et al.	
	Docket Number 066241.0125	Group Art Unit 3992	Filing Date November 27, 2006

U.S. PATENT DOCUMENTS

		DOCUMENT NO.	DATE	NAME	CLASS	SUBCLASS	FILING DATE
MX	C	5,179,652	01/12/93	Rozmanith, et al.			
—	A	~~5,455,948~~	10/03/95	~~Poole, et al.~~ Implicit			
MX	E	5,740,530	04/14/98	Labedz, et al.			
MA	D	5,742,246	04/21/98	Kuo, et al.			
MX	G	5,745,754	04/28/98	Lagarde, et al.			
MX	H	5,751,956	05/12/98	Kirsch			
MX	I	5,752,022	05/12/98	Chiu, et al.			
MX	J	5,754,772	05/19/98	Leaf			
MX	K	5,754,774	05/19/98	Bittinger, et al.			
MX	L	5,761,499	06/02/98	Sonderegger			
MX	M	5,761,663	06/02/98	Lagarde, et al.			
MX	N	5,793,964	08/11/98	Rogers, et al.			
MX	O	5,812,769	09/22/98	Graber, et al.			
MX	B	5,918,228	06/29/99	Rich, et al.			
	F	6,581,090	06/17/03	Lindbo, et al.			

							TRANSLATION	
						SUBCLASS	YES	NO
	P							
	Q							
	R							
	S							
	T							

NON-PATENT DOCUMENTS

		DOCUMENT (Including Author, Title, Source, and Pertinent Pages)	DATE
—	U	~~Honeycutt, Lee, "Groupware '95" The Convergence of Collab~~orative Technologies and the World Wide Web", Computer Mediated Communication Magazine, Volume 2, Number 4, April 1, 1995. 6 pages.	04/01/1995
—	V	~~Crocker, Glenn, "web2mush: Serving Interactive Resources to the~~ Web", 8 pages.	
—	W	~~Srinivas, et al., "Applications of Mosaic in Health~~ Care Delivery", 15 pages.	
—	X	Shklar, et al., "The "Info Harness" ~~Information Integ~~ration Platform", 13 pages.	
—	Y	~~Putz, Steve, "Interactive Information Services Using World-Wide~~ Web Hypertext", prepared for the First International Conference on World-Wide Web, May 25-27, 1994 in Geneva, Switzerland, 10 pages	

EXAMINER	DATE CONSIDERED
M. Shelton	6-10-2008

EXAMINER: Initial if citation considered, whether or not citation is in conformance with MPEP § 609. Draw line through citation if not in conformance and not considered. Include copy of this form with next communication to the applicant.

PTO-1449

Information Disclosure Citation in an Application

Application No.	Applicant(s)	
90/008342	Lowery, et al.	
Docket Number	**Group Art Unit**	**Filing Date**
066241.0125	3992	November 27, 2006

U.S. PATENT DOCUMENTS

		DOCUMENT NO.	DATE	NAME	CLASS	SUBCLASS	FILING DATE
—	A	~~4,973,784~~	06/26/90	~~Masai, et al.~~ Wrong #			
MX	H	5,283,897	02/01/94	Georgiadis, et al.			
MX	J	5,287,537	02/15/94	Newmark, et al.			
MX	I	5,335,323	08/02/94	Kolnick			
MX	K	5,347,632	09/13/1994	Filepp, et al.			
MX	C	5,706,434	01/06/98	Kremen, et al.			
MX	D	5,724,514	03/03/98	Arias			
MX	F	5,778,367	07/07/98	Wesinger, Jr., et al.			
MX	B	5,870,546	02/09/99	Kirsch			
MX	E	6,006,242	12/21/99	Poole, et al.			
MX	G	6,282,569	08/28/01	Wallis, et al.			
	L						
	M						
	N						

		DOCUMENT NO.	DATE	COUNTRY	CLASS	SUBCLASS	TRANSLATION YES	TRANSLATION NO
	O							
	P							
	Q							
	R							
	S							

NON-PATENT DOCUMENTS

		DOCUMENT (Including Author, Title, Source, and Pertinent Pages)	DATE
	~~T~~	~~"Internet Systems Table of Contents A~~ Supplement to DBMS, May 1996, 3 pages.	05/1996
	~~U~~	~~"Intranets Help Companies Streamline Nuts and Bolts of~~ Operations", Intranets Help Companies Streamline April 23, 1996.txt, 3 pages.	04/23/96
	~~V~~	~~Fox, et al., "Towards Web/Java based High Performance Distri~~buted Computing - an Evolving Virtual Machine", Northeast Parallel Architectures Center, Syracuse University, pages 1-10.	
	~~W~~	~~Furmanski, et al., "WebFlow - a visual programming paradigm for Web~~/Jave based coarse grain distributed computing", Northeast Parallel Architectures Center as Syracuse University, Handout Material at Supercomputing '96, Pittsburgh, November 1996, pages 1-6.	
	~~X~~	~~Katz, et al., "A Scalable HTTP Server" The NCSA~~ Prototype", National Center for Supercomputing Applications, University of Illinois, pages 1-10.	

EXAMINER	DATE CONSIDERED
M. Stalman	6·10·2008

EXAMINER: Initial if citation considered, whether or not citation is in conformance with MPEP § 609. Draw line through citation if not in conformance and not considered. Include copy of this form with next communication to the applicant.

DAL01:952278.1

PTO-1449

Information Disclosure Citation in an Application

Application No.	Applicant(s)		
90/008342	Lowery, et al.		
Docket Number	**Group Art Unit**	**Filing Date**	
066241.0125	3992	November 27, 2006	

U.S. PATENT DOCUMENTS

		DOCUMENT NO.	DATE	NAME	CLASS	SUBCLASS	FILING DATE
	A						
	B						
	C						
	D						
	E						
	F						
	G						
	H						
	I						
	J						
	K						
	L						
	M						
	N						

FOREIGN PATENT DOCUMENTS

		DOCUMENT NO.	DATE	COUNTRY	CLASS	SUBCLASS	TRANSLATION YES	TRANSLATION NO
	O							
	P							
	Q							
	R							
	S							

NON-PATENT DOCUMENTS

		DOCUMENT (Including Author, Title, Source, and Pertinent Pages)	DATE
	T	~~Westerberg, Fredrik, "Load Balancing and PRAMs", Article 2~~ for SURPRISE '95, 5 pages.	
	U	~~Petri, et al., "Load Balancing and Fault Tolerance in Workstation~~ Clusters Migrating Groups of Communicating Processes", pages 25-36.	
	V	~~Erkes, et al., "Implementing Shared Manufacturing Services on~~ the World-Wide Web", February 1996, Vol. 39, No. 2 Communications of the ACM, pages 34-45.	
	W	~~Bernstein, Philip, "Middleware A Model for Distributed~~ System Services", February 1996, Vol. 39, No. 2, Communications of the ACM, pages 86-98.	
	X	~~W 3 Middleware: Notions and Concepts.~~ Table 1,4 pages.	

EXAMINER	DATE CONSIDERED
M. Thelen	6·10·2008

EXAMINER: Initial if citation considered, whether or not citation is in conformance with MPEP § 609. Draw line through citation if not in conformance and not considered. Include copy of this form with next communication to the applicant.

PTO-1449 **Information Disclosure Citation in an Application**	Application No. 90/008342	Applicant(s) Lowery, et al.	
	Docket Number 066241.0125	Group Art Unit 3992	Filing Date November 27, 2006

U.S. PATENT DOCUMENTS

		DOCUMENT NO.	DATE	NAME	CLASS	SUBCLASS	FILING DATE
	A						
	B						
	C						
	D						
	E						
	F						
	G						
	H						
	I						
	J						
	K						
	L						

		DOCUMENT NO.	DATE	COUNTRY	CLASS	SUBCLASS	TRANSLATION YES	TRANSLATION NO
	M							
	N							
	O							
	P							
	Q							

NON-PATENT DOCUMENTS

		DOCUMENT (Including Author, Title, Source, and Pertinent Pages)	DATE
	~~S~~	~~Finkelstein, Rich, "The New Middleware", SIGMOD Record, Vol~~ume 24, No. 4, December 1995, pages 102-106.	12/1995
	~~T~~	~~Joseph, et al., "Rover: A Toolkit for Mobile Information Access",~~ M.I.T. Laboratory for Computer Science, pages 156-171.	
	~~U~~	~~Kleissner, Charly, "Enterprise Objects™ Framework - A Second Generation~~ Object-Relational Enabler", pages 455-459.	
	~~V~~	~~Girgensohn, et al., "Experiences in Developing Collaborative Applications~~ Using the World Wide Web "Shell"", Department of Computer Science, University of Toronto, pages 246-255.	

M. Stelzman 6·10·2008

EXAMINER: Initial if citation considered, whether or not citation is in conformance with MPEP § 609. Draw line through citation if not in conformance and not considered. Include copy of this form with next communication to the applicant.

M not F. le

7 of 37

PTO-1449 **Information Disclosure Citation in an Application**	Application No. 90/008342	Applicant(s) Lowery, et al.	
	Docket Number 066241.0125	Group Art Unit 3992	Filing Date November 27, 2006

U.S. PATENT DOCUMENTS

		DOCUMENT NO.	DATE	NAME	CLASS	SUBCLASS	FILING DATE
	A						
	B						
	C						
	D						
	E						
	F						
	G						
	H						
	I						
	J						
	K						
	L						
	M						
	N						
	O						

FOREIGN PATENT DOCUMENTS

		DOCUMENT NO.	DATE	COUNTRY	CLASS	SUBCLASS	TRANSLATION YES	TRANSLATION NO
	P							
	Q							
	R							
	S							
	T							

NON-PATENT DOCUMENTS

		DOCUMENT (Including Author, Title, Source, and Pertinent Pages)	DATE
PY NOT N FILE	~~U~~	~~Penchikala, Srini, "Clustering and Load Balancing in Tomcat 5, Part 1", 03/31/2004~~, 6 pages.	3/31/2004
	~~V~~	~~"Second-Generation Web Server Offers Powerful Application Platform, Access to Dynamic~~ Corporate Data, Advanced Security", Oracle Webserver 2.0 Ships, pages 1-3.	
	~~W~~	~~"Middleware Product Provides Open Links to Databases Enabling~~ Delivery of Dynamic, Personalized Content to Web Sites", Sybase Announces General Availability of Web.Sql, pages 1-2.	
	~~X~~	~~"Powersoft to Internet-Enable Client/Server Applications, Provide~~ Browser Extensions, and Enable the Development of Executable Content and Application Servers", Sybase, Inc. Announces WEB Works Internet Architecture, page 1-3.	
	~~Y~~	~~Silva, et al., "The Cases of Design Using the World~~ Wide Web", Computer Science Division, University of California, Berkeley, 7 pages	

EXAMINER	DATE CONSIDERED
M. Steinman	6/10/2008

EXAMINER: Initial if citation considered, whether or not citation is in conformance with MPEP § 609. Draw line through citation if not in conformance and not considered. Include copy of this form with next communication to the applicant.

PTO-1449 **Information Disclosure Citation in an Application**	Application No. 90/008342	Applicant(s) Lowery, et al.	
	Docket Number 066241.0125	Group Art Unit 3992	Filing Date November 27, 2006

U.S. PATENT DOCUMENTS

		DOCUMENT NO.	DATE	NAME	CLASS	SUBCLASS	FILING DATE
	A						
	B						
	C						
	D						
	E						
	F						
	G						
	H						
	I						
	J						
	K						
	L						
	M						
	N						

FOREIGN PATENT DOCUMENTS

		DOCUMENT NO.	DATE	COUNTRY	CLASS	SUBCLASS	TRANSLATION YES	TRANSLATION NO
	O							
	P							
	Q							
	R							
	S							

NON-PATENT DOCUMENTS

		DOCUMENT (Including Author, Title, Source, and Pertinent Pages)	DATE
DO NOT FILE	~~T~~	~~Perrochon, Louis, "W3 "Middleware": Notion and Concepts~~, 9 pages.	
	~~U~~	~~Iyengar, et al., "Improving Web Server Performance by Caching Dynamic~~ Data", Proceedings of the USENIX Symposium on Internet Technologies and Systems, Monterey, California, December 1997, 13 pages.	
	~~V~~	~~YAHOO! Enhances Real-Time Information and Adds New Features~~" pages 1-3.	
	~~W~~	~~Thau, Robert, "Design considerations for the Apache Server~~ API", Journal reference: Computer Networks and ISDN Systems, Volume 28, issues 7-11, p. 1113, 16 pages.	
	~~X~~	~~Everitt, Paul, "The ILU Requester: Object Services in~~ HTTP Servers", W3C Informational Draft 07-Mar-96, 21 pages.	

EXAMINER	DATE CONSIDERED
M. Stuhlmann	4·10·2008

EXAMINER: Initial if citation considered, whether or not citation is in conformance with MPEP § 609. Draw line through citation if not in conformance and not considered. Include copy of this form with next communication to the applicant.

PTO-1449 **Information Disclosure Citation in an Application**	Application No. 90/008342	Applicant(s) Lowery, et al.	
	Docket Number 066241.0125	Group Art Unit 3992	Filing Date November 27, 2006

U.S. PATENT DOCUMENTS

		DOCUMENT NO.	DATE	NAME	CLASS	SUBCLASS	FILING DATE
	A						
	B						
	C						
	D						
	E						
	F						
	G						
	H						
	I						
	J						
	K						
	L						
	M						
	N						
	O						

						SUBCLASS	TRANSLATION YES	TRANSLATION NO
	S							
	T							

NON-PATENT DOCUMENTS

		DOCUMENT (Including Author, Title, Source, and Pertinent Pages)	DATE
~~U~~		~~CYBERTIB™ and the Internet, T~~IBCO, 4 pages.	
~~V~~		~~CYBERTIB™ Family~~ of Products, TIBCO, 4 pages.	
~~W~~		~~TIBCO Corporate Overview, TI~~BCO, 4 pages.	
~~X~~		~~"Bulletin of the Technical Committee on~~ Data Engineering", March 1995, Volume 18, No. 1, IEEE Computer Society, 52 pages	3/1995
~~Y~~		~~Oki, et al., "The Information Bus® - An Arch~~itecture for Extensible Distributed Systems", 1993, pages 58-68.	

Y NOT ON FILE

EXAMINER	DATE CONSIDERED
M. Stetson	6·10·2008

EXAMINER: Initial if citation considered, whether or not citation is in conformance with MPEP § 609. Draw line through citation if not in conformance and not considered. Include copy of this form with next communication to the applicant.

10 of 37

PTO-1449

Information Disclosure Citation in an Application

Application No.	Applicant(s)	
90/008342	Lowery, et al.	
Docket Number	**Group Art Unit**	**Filing Date**
066241.0125	3992	November 27, 2006

U.S. PATENT DOCUMENTS

		DOCUMENT NO.	DATE	NAME	CLASS	SUBCLASS	FILING DATE
	A						
	B						
	C						
	D						
	E						
	F						
	G						
	H						
	I						
	J						
	K						
	L						
	M						
	N						

		DOCUMENT NO.	DATE	COUNTRY	CLASS	SUBCLASS	TRANSLATION YES	TRANSLATION NO
	O							
	P							
	Q							
	R							
	S							

NON-PATENT DOCUMENTS

		DOCUMENT (Including Author, Title, Source, and Pertinent Pages)	DATE
	T	~~Bowman, et al., "The Harvest Information Discovery and Access System~~", 9 pages.	
	U	~~Bowman, et al., "Harvest: A Scalable, Customizable Discovery and~~ Access System", March 12, 1995, pages 1-29.	
	V	~~Boutell, et al., "Techniques for Server-Side Dynamic Document Generation~~", The REF52 Database, 7 pages.	
	W	~~Dönszelmann, et al., "Gateways for World-Wide Web in the 'Online~~' Data Acquisition System of the DELPHI Experiment at CERN", 9 pages.	
	X	~~Hastings, et al., "Providing Customers Information Using~~ the WEB and CORBA", 9 pages.	

EXAMINER	DATE CONSIDERED
M. Steelman	6·10·2008

EXAMINER: Initial if citation considered, whether or not citation is in conformance with MPEP § 609. Draw line through citation if not in conformance and not considered. Include copy of this form with next communication to the applicant.

PTO-1449 **Information Disclosure Citation in an Application**	Application No. 90/008342	Applicant(s) Lowery, et al.	
	Docket Number 066241.0125	Group Art Unit 3992	Filing Date November 27, 2006

U.S. PATENT DOCUMENTS

		DOCUMENT NO.	DATE	NAME	CLASS	SUBCLASS	FILING DATE
	A						
	B						
	C						
	D						
	E						
	F						
	G						
	H						
	I						
	J						
	K						
	L						
	M						
	N						

FOREIGN PATENT DOCUMENTS

		DOCUMENT NO.	DATE	COUNTRY	CLASS	SUBCLASS	TRANSLATION YES	TRANSLATION NO
	O							
	P							
	Q							
	R							
	S							

NON-PATENT DOCUMENTS

		DOCUMENT (Including Author, Title, Source, and Pertinent Pages)	DATE
PT NOT ON File	~~T~~	~~Pareplace-Digitalk Introduces Visualwave, 5 pages.~~	
"	~~U~~	~~O'Callaghan, "A Central Caching Proxy Serve~~r for WWW users at the University of Melbourne", 9 pages.	
"	~~V~~	~~Beitz, et al., "Integrating WWW and Middle~~ware", 10 pages.	
"	~~W~~	~~"Interface to Relational Databases" 2 pag~~es.	
"	~~X~~	~~Sjölin, Martin, "A WWW Front E~~nd to an OODBMS", 11 pages.	

EXAMINER	DATE CONSIDERED
M. Steelman	6-10-2008

EXAMINER: Initial if citation considered, whether or not citation is in conformance with MPEP § 609. Draw line through citation if not in conformance and not considered. Include copy of this form with next communication to the applicant.

12 of 37

DAL01:952278.1

PTO-1449 **Information Disclosure Citation in an Application**	Application No. 90/008342	Applicant(s) Lowery, et al.	
	Docket Number 066241.0125	Group Art Unit 3992	Filing Date November 27, 2006

U.S. PATENT DOCUMENTS

		DOCUMENT NO.	DATE	NAME	CLASS	SUBCLASS	FILING DATE
	A						
	B						
	C						
	D						
	E						
	F						
	G						
	H						
	I						
	J						
	K						
	L						

		DOCUMENT NO.	DATE	COUNTRY	CLASS	SUBCLASS	TRANSLATION YES	TRANSLATION NO
	M							
	N							
	O							
	P							
	Q							

NON-PATENT DOCUMENTS

		DOCUMENT (Including Author, Title, Source, and Pertinent Pages)	DATE
DO NOT FILE	S	~~Perrochon, Louis, "Translation Servers: Gateways Betwee~~n Stateless and Stateful Information Systems", 8 pages.	
	T	~~Almeida, et al., "Performance Analysis of a WWW~~ Server", 10 pages.	
	U	~~Dilley, John, "Web Server Workload Characterization~~", pages 1-16.	
	V	~~"Pacific Coast Software updates WebCatalog, the fastest Web databases; New features include remote~~ administration of database and automatic traffic distribution among multiple servers", HighBeam Research, http://www.highbeam.com/library/docfreeprint.asp?docid=1G1:182494&ctrlInfo=Round17%63AProc%3ADocFree%3APrint&pring=yes, Business Wire; 4/12/1996, page 1-3.	4/21/1996

M. Alleman 6·10·2008

EXAMINER: Initial if citation considered, whether or not citation is in conformance with MPEP § 609. Draw line through citation if not in conformance and not considered. Include copy of this form with next communication to the applicant.

PTO-1449

Information Disclosure Citation in an Application

Application No.	Applicant(s)	
90/008342	Lowery, et al.	
Docket Number	**Group Art Unit**	**Filing Date**
066241.0125	3992	November 27, 2006

U.S. PATENT DOCUMENTS

		DOCUMENT NO.	DATE	NAME	CLASS	SUBCLASS	FILING DATE
	A						
	B						
	C						
	D						
	E						
	F						
	G						
	H						
	I						
	J						
	K						
	L						
	M						
	N						
	O						

FOREIGN PATENT DOCUMENTS

		DOCUMENT NO.	DATE	COUNTRY	CLASS	SUBCLASS	TRANSLATION YES	TRANSLATION NO
	P							
	Q							
	R							
	S							
	T							

NON-PATENT DOCUMENTS

		DOCUMENT (Including Author, Title, Source, and Pertinent Pages)	DATE
DO NOT FILE	~~U~~	~~"Starnine Previews WebSTAR (Formerly MacHTTP)~~ Version 1.2, Boasting 30% Speed Increase; Increased performance, remote administration on any TCP IP network and new server push capabilities featured", HighBeam Research, Business Wire: 8/8/1995, pages 1-5.	8/8/1995
	~~V~~	~~"2. A history of HTML", Addison-Wesley Longman 1998,~~ http://www.w3.org/People/Raggett/book4/ch02.html, pages 1-16.	
	~~W~~	~~Iyengar, et al., "An Analysis of Web Server~~ Performance", 1999 IEEE, pages 1943-1947.	
	~~X~~	~~Nelson, et al., "World-Wide-Web Implementation~~ of the Langley Technical Report Server", NASA Technical Memorandum 109162, September 1994, pages 1-32.	
	~~Y~~	~~Stadelmann, et al., "UNIX Web Server Performance~~ Analysis", 8 pages.	

EXAMINER	DATE CONSIDERED
M. Steinberg	6·10·2008

EXAMINER: Initial if citation considered, whether or not citation is in conformance with MPEP § 609. Draw line through citation if not in conformance and not considered. Include copy of this form with next communication to the applicant.

PTO-1449

Information Disclosure Citation in an Application

Application No.	Applicant(s)	
90/008342	Lowery, et al.	
Docket Number	**Group Art Unit**	**Filing Date**
066241.0125	3992	November 27, 2006

U.S. PATENT DOCUMENTS

		DOCUMENT NO.	DATE	NAME	CLASS	SUBCLASS	FILING DATE
	A						
	B						
	C						
	D						
	E						
	F						
	G						
	H						
	I						
	J						
	K						
	L						
	M						
	N						

FOREIGN PATENT DOCUMENTS

		DOCUMENT NO.	DATE	COUNTRY	CLASS	SUBCLASS	TRANSLATION YES	TRANSLATION NO
	O							
	P							
	Q							
	R							
	S							

NON-PATENT DOCUMENTS

		DOCUMENT (Including Author, Title, Source, and Pertinent Pages)	DATE
DO NOT FILE	T	~~Speo, Simon, "Binary Gateway Interface - An API for dynamically~~ extensible HTTP servers", July 1, 1994, pages 1-5.	07/01/94
"	U	~~"Performance Benchmark Tests of Unix Web Servers Using API~~s and CGIs", Executive Summary, November 1995, pages 1-5.	11/95
"	V	~~"Performance Benchmark Comparison of Unix Web S~~ervers Using Netscape Communications Server 1.12 (with NSAPI and with CGI), Open Market non-secure WebServer 1.1-eval, and NCSA httpd Version 1.4.2" Executive Summary, November 1995, pages 1-8.	11/95
"	W	~~Zimmerman, Kenneth, Oracle "WebSystem and~~ the World Wide Web Interface Kit", Oracle Unleashed oun55fi.htm, pages 1-18.	
"	X	~~Google comp.databases.oracle > HELP - Oracle~~ WOW gateway, 1 page.	

EXAMINER	DATE CONSIDERED
M. Stelzer	6·10·2008

EXAMINER: Initial if citation considered, whether or not citation is in conformance with MPEP § 609. Draw line through citation if not in conformance and not considered. Include copy of this form with next communication to the applicant.

PTO-1449

Information Disclosure Citation in an Application

Application No.	Applicant(s)	
90/008342	Lowery, et al.	
Docket Number 066241.0125	**Group Art Unit** 3992	**Filing Date** November 27, 2006

U.S. PATENT DOCUMENTS

		DOCUMENT NO.	DATE	NAME	CLASS	SUBCLASS	FILING DATE
	A						
	B						
	C						
	D						
	E						
	F						
	G						
	H						
	I						
	J						
	K						
	L						
	M						
	N						
	O						

							TRANSLATION	
						SUBCLASS	YES	NO
	P							
	Q							
	R							
	S							
	T							

NON-PATENT DOCUMENTS

		DOCUMENT (Including Author, Title, Source, and Pertinent Pages)	DATE
NOT FILE	U	~~Google comp.databases.oracle > HELP - Oracle WOW gateway~~, 2 pages.	
	V	~~Google comp.databases.oracle > HELP - Oracle WOW gateway~~, 1 page.	
	W	~~Google comp.databases.oracle > HELP - Oracle WOW~~ gateway, 1 page.	
	X	~~Webobjects Enterprise Web Solutions, 2~~ pages.	
	Y	~~Arlitt, et al., "Web Server Workload~~ Characterization", Department of Computer Science, University of Saskatchewan, file:///Users/mac17/Desktop/new*literature/scholar1.htm, 9/25/2005, pages 18 pages.	

EXAMINER M. Hluchyj

DATE CONSIDERED 6-10-2008

EXAMINER: Initial if citation considered, whether or not citation is in conformance with MPEP § 609. Draw line through citation if not in conformance and not considered. Include copy of this form with next communication to the applicant.

PTO-1449

Information Disclosure Citation in an Application

Application No.	Applicant(s)	
90/008342	Lowery, et al.	
Docket Number	Group Art Unit	Filing Date
066241.0125	3992	November 27, 2006

U.S. PATENT DOCUMENTS

	DOCUMENT NO.	DATE	NAME	CLASS	SUBCLASS	FILING DATE
A						
B						
C						
D						
E						
F						
G						
H						
I						
J						
K						
L						
M						
N						

	DOCUMENT NO.	DATE	COUNTRY	CLASS	SUBCLASS	TRANSLATION YES	TRANSLATION NO
O							
P							
Q							
R							
S							

NON-PATENT DOCUMENTS

	DOCUMENT (Including Author, Title, Source, and Pertinent Pages)	DATE
T	~~Brisco, T., "DNS Support for Load Balancing"~~, April 1995, http://www.ietf.org/rfc/rfc1794.txt?number=1794, 6/29/2005, pages 1-7.	04/1995
U	~~Clark, Henry, "DAWGS A Distributed Computer Server Utilizing Idle~~ Workstations", Journal of Parallel and Distributed Computing 14, 1992, pages 175-186.	1992
V	~~Gwertzman, et al., "The Case for Geographical Push Caching~~", 9/95, 1995 IEEE, pages 51-56.	
W	~~Graf, et al., "HP Task Broker: A Tool for Distributing Computational~~ Tasks", August 1993 Hewlett-Packard Journal, pages 15-22.	8/1993
X	~~Hui, et al., "BALANCE - A Flexible Parallel Load Balancing~~ System for Heterogeneous Computing Systems and Networks", Department of Computer Science, The Hong Kong University of Science and Technology, 1996 IEEE, 9 pages , published in IEEE INFOCOM'96, The Conference on Computer Communications, Fifteenth Annual Joint Conference of the IEEE Computer and Communications Societies, "Networking the Next Generation", March 24-28, 1996, San Francisco, California, Proceedings Volume 2.	1996

EXAMINER	DATE CONSIDERED
M. Shelum	6/10/2008

EXAMINER: Initial if citation considered, whether or not citation is in conformance with MPEP § 609. Draw line through citation if not in conformance and not considered. Include copy of this form with next communication to the applicant.

DAL01:952278.1

PTO-1449 **Information Disclosure Citation in an Application**	Application No. 90/008342	Applicant(s) Lowery, et al.	
	Docket Number 066241.0125	Group Art Unit 3992	Filing Date November 27, 2006

U.S. PATENT DOCUMENTS

		DOCUMENT NO.	DATE	NAME	CLASS	SUBCLASS	FILING DATE
	A						
	B						
	C						
	D						
	E						
	F						
	G						
	H						
	I						
	J						
	K						
	L						
	M						
	N						

FOREIGN PATENT DOCUMENTS

		DOCUMENT NO.	DATE	COUNTRY	CLASS	SUBCLASS	TRANSLATION YES	TRANSLATION NO
	O							
	P							
	Q							
	R							
	S							

NON-PATENT DOCUMENTS

		DOCUMENT (Including Author, Title, Source, and Pertinent Pages)	DATE
	~~T~~	~~Krueger, et al., "The Stealth Distributed Scheduler", 1~~991 IEEE, pages 336-343,	1991
	~~U~~	~~NHSE Review™ 1996 Volume First Issue Cluster Manage~~ment Software, http://nhse.cs.rice.edu/NHSEreview/CMS/Chapter4.html, 7/22/2005, pages 1-25.	
MI	V	Shoja, G. C., "A Distributed Facility for Load Sharing and Parallel Processing Among Workstations", Department of Computer Science, University of Victoria, Victoria, BC, Canada, pages 163-172. 1991	

EXAMINER	DATE CONSIDERED
M. Steelman	6/10/2008

EXAMINER: Initial if citation considered, whether or not citation is in conformance with MPEP § 609. Draw line through citation if not in conformance and not considered. Include copy of this form with next communication to the applicant.

NOT FILE

18 of 37

PTO-1449 **Information Disclosure Citation in an Application**	Application No. 90/008342	Applicant(s) Lowery, et al.	
	Docket Number 066241.0125	Group Art Unit 3992	Filing Date November 27, 2006

U.S. PATENT DOCUMENTS

		DOCUMENT NO.	DATE	NAME	CLASS	SUBCLASS	FILING DATE
	A						
	B						
	C						
	D						
	E						
	F						
	G						
	H						
	I						
	J						
	K						
	L						
	M						
	N						

FOREIGN PATENT DOCUMENTS

		DOCUMENT NO.	DATE	COUNTRY	CLASS	SUBCLASS	TRANSLATION YES	TRANSLATION NO
	O							
	P							
	Q							
	R							
	S							

NON-PATENT DOCUMENTS

		DOCUMENT (Including Author, Title, Source, and Pertinent Pages)	DATE
MV	T	Andresen, et al., "SWEB: Towards a Scalable World Wide Web Server on Multicomputers", September 1995, 26 pages.	09/1995
MV	U	Zhou, et al., "Utopia: a Load Sharing Facility for Large, Heterogeneous Distributed Computer Systems, Software Practice of Experience, Volume 23(12), December 1993, pages 1305-1336.	12/1993
MV	V	Yarborough, et al., "Providing mainframe access as a single service on the corporate internet", Telecommunications, June 1994 Volume 28, pages 6 pages.	06/1994
MV	W	Kwan, et al., "NCSA's World Wide Web Server: Design and Performance", Computing Practices, 1995 IEEE, pages 68-74.	1995
MV	X	Berners-Lee, et al., "World-Wide Web", Conference - Computing in High Energy Physics 92, Annecy, France 23-27 September 1992, pages 1-6.	

EXAMINER	DATE CONSIDERED
M. Steelman	6·10·2008

EXAMINER: Initial if citation considered, whether or not citation is in conformance with MPEP § 609. Draw line through citation if not in conformance and not considered. Include copy of this form with next communication to the applicant.

PTO-1449

Information Disclosure Citation in an Application

Application No.	Applicant(s)	
90/008342	Lowery, et al.	
Docket Number	Group Art Unit	Filing Date
066241.0125	3992	November 27, 2006

U.S. PATENT DOCUMENTS

		DOCUMENT NO.	DATE	NAME	CLASS	SUBCLASS	FILING DATE
	A						
	B						
	C						
	D						
	E						
	F						
	G						
	H						
	I						
	J						
	K						
	L						
	M						
	N						
	O						

							TRANSLATION	
						SUBCLASS	YES	NO
	P							
	Q							
	R							
	S							
	T							

NON-PATENT DOCUMENTS

		DOCUMENT (Including Author, Title, Source, and Pertinent Pages)	DATE
—	U	~~Chiu, et al., "Workgroup Web Forum: Tools and applications for WWW-based~~ group collaboration", pages 1-2. missing date	
MS	V	Dar, et al., "Semantic Data Caching and Replacement", 12 pages. 1996	
MS	W	Eichmann, David, "Application Architectures for Web-Based Data Access", http://www.csw.rutgers.edu/shklar/www4/eichmann.html, 1/24/2006, pages 1-3.	
Y NOT ON FILE	X	~~Kappe, Frank, "Aspects of a Modern Multi Media Information System", Dissertation for~~ the Award of the Academic Degree Doctor of Technical Sciences at the Graz University of Technology, June 1991, 163 pages.	6/1991
Y NOT ON FILE	Y	~~Kappe, Frank, "A Scalable Architecture for Maintain Referential~~ Integrity in Distributed Information Systems", pages 84-104. + Date	

EXAMINER	DATE CONSIDERED
M. Stuhlman	6/10/2008

EXAMINER: Initial if citation considered, whether or not citation is in conformance with MPEP § 609. Draw line through citation if not in conformance and not considered. Include copy of this form with next communication to the applicant.

PTO-1449 **Information Disclosure Citation in an Application**	Application No. 90/008342	Applicant(s) Lowery, et al.	
	Docket Number 066241.0125	Group Art Unit 3992	Filing Date November 27, 2006

U.S. PATENT DOCUMENTS

		DOCUMENT NO.	DATE	NAME	CLASS	SUBCLASS	FILING DATE
	A						
	B						
	C						
	D						
	E						
	F						
	G						
	H						
	I						
	J						
	K						
	L						
	M						
	N						

		DOCUMENT NO.	DATE	COUNTRY	CLASS	SUBCLASS	TRANSLATION YES	TRANSLATION NO
	O							
	P							
	Q							
	R							
	S							

NON-PATENT DOCUMENTS

		DOCUMENT (Including Author, Title, Source, and Pertinent Pages)	DATE
4 NOT FILE	T	~~Schmidt, Jim, "Writing Internet Information Server extensions~~ is no day at the zoo", http://www.microsoft.com/mind/0396/ISAPI/ISAPI.asp 10/10/2005, 14 pages.	
"	U	~~"Microsoft Ships Internet Information Server Free Product~~ Outperforms UNIX..." 2/12/96. http://www.microsoft.com/presspass/1996/feb96/iishipr.mspx 10/10/2005, 3 pages	2/12/1996
"	V	~~"Writing an ISAPI Filter", Revision 0.5 (Draft) Internet development~~ Toolbox, http://www.graphcomp.com/info/specs/ms/httpfilt.htm, 10/10/2005, 21 pages.	
—	W	~~Sheldon, et al., "Discover: A Resource Discovery System based~~ on Content Routing", pages 1-14. missing date	
MS	X	Bowman, et al., "Scalable Internet Resource Discovery: Research Problems and Approaches", February 23, 1994, pages 1-21.	

EXAMINER	DATE CONSIDERED
M. Stelman	6·10·2008

EXAMINER: Initial if citation considered, whether or not citation is in conformance with MPEP § 609. Draw line through citation if not in conformance and not considered. Include copy of this form with next communication to the applicant.

PTO-1449 **Information Disclosure Citation in an Application**	Application No. 90/008342	Applicant(s) Lowery, et al.	
	Docket Number 066241.0125	Group Art Unit 3992	Filing Date November 27, 2006

U.S. PATENT DOCUMENTS

		DOCUMENT NO.	DATE	NAME	CLASS	SUBCLASS	FILING DATE
	A						
	B						
	C						
	D						
	E						
	F						
	G						
	H						
	I						
	J						
	K						
	L						
	M						
	N						

FOREIGN PATENT DOCUMENTS

		DOCUMENT NO.	DATE	COUNTRY	CLASS	SUBCLASS	TRANSLATION YES	TRANSLATION NO
	O							
	P							
	Q							
	R							
	S							

NON-PATENT DOCUMENTS

		DOCUMENT (Including Author, Title, Source, and Pertinent Pages)	DATE
—	T	~~Shklar, et al., "InfoHarness: Use of Automatically Generated Metadata for Search~~ and Retrieval of Heterogeneous Information", pages 1-14. missing date	
—	U	~~Babu, et al., "A Portable, Extensible and Efficient Implementation of Proactor~~ Pattern", pages 1-18. missing date	
MS	V	Shklar, et al., "Providing Web Access to Legacy Data", http://www.cs.rutgers.edu/shklar/www4_proposal.html, 1/25/2006, pages 1-3.	
—	W	~~WebRexLogo.tiff, 7 pages.~~ date missing	
MH	X	"Developer Discussion of WebRex (tm) -- cx_outputW.jpeg --, 5 pages. 1995-1996	

EXAMINER	DATE CONSIDERED
M. Shutman	6-10-2008

EXAMINER: Initial if citation considered, whether or not citation is in conformance with MPEP § 609. Draw line through citation if not in conformance and not considered. Include copy of this form with next communication to the applicant.

PTO-1449 **Information Disclosure Citation in an Application**	Application No. 90/008342	Applicant(s) Lowery, et al.	
	Docket Number 066241.0125	Group Art Unit 3992	Filing Date November 27, 2006

U.S. PATENT DOCUMENTS

		DOCUMENT NO.	DATE	NAME	CLASS	SUBCLASS	FILING DATE
	A						
	B						
	C						
	D						
	E						
	F						
	G						
	H						
	I						
	J						
	K						
	L						
	M						
	N						

FOREIGN PATENT DOCUMENTS

		DOCUMENT NO.	DATE	COUNTRY	CLASS	SUBCLASS	TRANSLATION YES	TRANSLATION NO
	O							
	P							
	Q							
	R							
	S							

NON-PATENT DOCUMENTS

		DOCUMENT (Including Author, Title, Source, and Pertinent Pages)	DATE
MS	T	"High Level Description of the title: WebRex Server (tm) -- cs_outputW.jpeg, 5 pages. 1995-1996	
—	U	~~Schussel, George, "Client/Server: Past, Present and Future, 10 pages.~~ missing date	
MS	V	INFORMATIONWEEK for Business and Technology Managers, November 13, 1995 Two Tier Versus Three Tier Apps Alan Dickman 8p	11/13/1995
MS	W	DBMS Database & Client/Server Solutions, May 1994, Volume 7, 10 pages. Edelstein - Unraveling Client/Server Architectures	05/1994

EXAMINER	DATE CONSIDERED
M. Shutman	6-10-2008

EXAMINER: Initial if citation considered, whether or not citation is in conformance with MPEP § 609. Draw line through citation if not in conformance and not considered. Include copy of this form with next communication to the applicant.

PTO-1449 **Information Disclosure Citation in an Application**	Application No. 90/008342	Applicant(s) Lowery, et al.	
	Docket Number 066241.0125	Group Art Unit 3992	Filing Date November 27, 2006

U.S. PATENT DOCUMENTS

		DOCUMENT NO.	DATE	NAME	CLASS	SUBCLASS	FILING DATE
	A						
	B						
	C						
	D						
	E						
	F						
	G						
	H						
	I						
	J						
	K						
	L						
	M						
	N						
	O						

							TRANSLATION	
						SUBCLASS	YES	NO
	P							
	Q							
	R							
	S							
	T							

NON-PATENT DOCUMENTS

		DOCUMENT (Including Author, Title, Source, and Pertinent Pages)	DATE
MN	U	"Information Systems Management", Spring 1996, Volume 13, No. 2, 8 pages.	
MN	V	Eckerson, Wayne, "Three-Tier Client/Server Architecture - Achieving Scalability, Performance, and Efficiency in Client/Server Applications", 21 pages. 2006	
MN	W	Business Wire, January 30, 1996, Headline: NeXt Demonstrates Real Solutions for the Web at WebMania Event: Steve Jobs unveils products, services and customer support for NeXT solution, 3 pages.	01/30/1996
MN	X	Reuters News, August 14, 1995, Headline: NeXT Computer joins Internet bandwagon, 1 page.	08/14/1995
MN	Y	Business Wire, August 14, 1995, Headline: Spinning Objects for the Web; Desktop to WWW.NeXT's Object Software Enables the Rapid Development of Custom Applications", 3 pages.	08/14/1995

EXAMINER	DATE CONSIDERED
M. Shukman	6/10/2008

EXAMINER: Initial if citation considered, whether or not citation is in conformance with MPEP § 609. Draw line through citation if not in conformance and not considered. Include copy of this form with next communication to the applicant.

PTO-1449

Information Disclosure Citation in an Application

Application No.	Applicant(s)		
90/008342	Lowery, et al.		
Docket Number	**Group Art Unit**	**Filing Date**	
066241.0125	3992	November 27, 2006	

U.S. PATENT DOCUMENTS

		DOCUMENT NO.	DATE	NAME	CLASS	SUBCLASS	FILING DATE
	A						
	B						
	C						
	D						
	E						
	F						
	G						
	H						
	I						
	J						
	K						
	L						
	M						
	N						

		DOCUMENT NO.	DATE	COUNTRY	CLASS	SUBCLASS	TRANSLATION YES	TRANSLATION NO
	O							
	P							
	Q							
	R							
	S							

NON-PATENT DOCUMENTS

		DOCUMENT (Including Author, Title, Source, and Pertinent Pages)	DATE
MX	T	Business Wire, August 14, 1995, Headline: NeXT Computer, Inc., - Questions and Answers - Object World, August 1995; WebObjects - The Power of Objects for the WWW, 3 pages.	08/14/1995
MX	U	Business Wire, August 14, 1995, Headline: NeXT WebObjects Delivers the Power of Objects to the WWW: Industry's first tool to enable rapid development of complex Web-based applications, 2 pages.	08/14/1996
MX	V	InfoWorld, August 21, 1995, Headline: Next plans object-oriented app development for Web, 1 page.	08/21/1995
MX	W	THE AUSTRALIAN, August 22, 1995, Headline: Jobs'next object is to tackle Web, 1 page.	08/22/1995
MX	X	Business and Industry, August 28, 1995, Headline: NEXT's WebObjects speeds design and upkeep, 2 pages.	08/28/1995

EXAMINER	DATE CONSIDERED
M. Shelton	6-10-2008

EXAMINER: Initial if citation considered, whether or not citation is in conformance with MPEP § 609. Draw line through citation if not in conformance and not considered. Include copy of this form with next communication to the applicant.

PTO-1449 **Information Disclosure Citation in an Application**	Application No. 90/008342	Applicant(s) Lowery, et al.	
	Docket Number 066241.0125	Group Art Unit 3992	Filing Date November 27, 2006

U.S. PATENT DOCUMENTS

		DOCUMENT NO.	DATE	NAME	CLASS	SUBCLASS	FILING DATE
	A						
	B						
	C						
	D						
	E						
	F						
	G						
	H						
	I						
	J						
	K						
	L						
	M						
	N						

FOREIGN PATENT DOCUMENTS

		DOCUMENT NO.	DATE	COUNTRY	CLASS	SUBCLASS	TRANSLATION YES	TRANSLATION NO
	O							
	P							
	Q							
	R							
	S							

NON-PATENT DOCUMENTS

		DOCUMENT (Including Author, Title, Source, and Pertinent Pages)	DATE
MA	T	Google, Topic in comp.sys.next.announce "Steve Jobs on CNN's Moneyline demoing Web Objects tonight, 1 page. 1995	
MA	U	CNN, September 7, 1995, Headline: Steve Jobs Displays Possible Future of Worldwide Web, 3 pages.	09/07/1995
MA	V	Wessels, Duane, "Intelligent Caching for World-Wide Web Objects", Thesis submitted to the Faculty of the Graduate School of the University of Colorado, 1995, 93 pages	1995
MA	W	Yang, et al., "An Architecture for Integrating OODBs with WWW", Journal Reference: Computer Networks and ISDN Systems, Volume 28, issues 7-11, p. 1243, pages 1-15.	
MA	X	"Case Study: Python in a Commercial Environment", http://www.lyra.org/greg/CaseStudy/ December 31, 2005, pages 1-~~6~~ 8	

EXAMINER	DATE CONSIDERED
M. Shutman	6-10-2008

EXAMINER: Initial if citation considered, whether or not citation is in conformance with MPEP § 609. Draw line through citation if not in conformance and not considered. Include copy of this form with next communication to the applicant.

26 of 37

PTO-1449

Information Disclosure Citation in an Application

Application No.	Applicant(s)
90/008342	Lowery, et al.
Docket Number	**Group Art Unit**
066241.0125	3992
Filing Date	
November 27, 2006	

U.S. PATENT DOCUMENTS

		DOCUMENT NO.	DATE	NAME	CLASS	SUBCLASS	FILING DATE
	A						
	B						
	C						
	D						
	E						
	F						
	G						
	H						
	I						
	J						
	K						
	L						
	M						
	N						

FOREIGN PATENT DOCUMENTS

		DOCUMENT NO.	DATE	COUNTRY	CLASS	SUBCLASS	TRANSLATION YES	TRANSLATION NO
	O							
	P							
	Q							
	R							
	S							

NON-PATENT DOCUMENTS

		DOCUMENT (Including Author, Title, Source, and Pertinent Pages)	DATE
MN	T	Mallery, John, "A Common LISP Hypermedia Server", May 5, 1994, Proceedings of the First International Conference on the World-Wide Web, Geneva: CERN, May 5, 1994, pages 1-14.	May 5, 1994
MN	U	Fifth International World-Wide Web Conference, May 6-10, 1996, Paris France, pages 1-6.	
—	V	~~Frank, Maurice, "Database and the Internet" DBMS - December 1995, pages 1-14.~~ Duplicate	12/1995
MN	W	Frank, Maurice, "Database and the Internet" DBMS - December 1995, pages 1-18.	12/1995
—	X	~~Trevor, et al., "Exorcising daemons: A modular and lightweight approach to de~~ployings applications on the Web", pages 1-11.	

PY NOT I FILE

EXAMINER M. Stuckman

DATE CONSIDERED 6/10/2008

EXAMINER: Initial if citation considered, whether or not citation is in conformance with MPEP § 609. Draw line through citation if not in conformance and not considered. Include copy of this form with next communication to the applicant.

PTO-1449

Information Disclosure Citation in an Application

Application No.	Applicant(s)	
90/008342	Lowery, et al.	
Docket Number	**Group Art Unit**	**Filing Date**
066241.0125	3992	November 27, 2006

U.S. PATENT DOCUMENTS

	DOCUMENT NO.	DATE	NAME	CLASS	SUBCLASS	FILING DATE
A						
B						
C						
D						
E						
F						
G						
H						
I						
J						
K						
L						
M						
N						
O						

					SUBCLASS	TRANSLATION YES	TRANSLATION NO
P							
Q							
R							
S							
T							

NON-PATENT DOCUMENTS

		DOCUMENT (Including Author, Title, Source, and Pertinent Pages)	DATE
'y NOT FILE	U	~~Wessels, Duane, "Intelligent Caching for World-Wide Web Objects"~~, pages 1-13. 13 Page version NOT ON File See 93 P version on 1053	
"	V	~~Boston, et al., "Interactive species distribution reporting, mapping and modelling~~ using the World Wide Web", Second International WWW Conference '94: Mosaic and the Web - Chicago, page 1-11.	
"	W	~~Barta, et al., "Interface-parasite Gateways", Fourth International World Wide~~ Web Conference, December 11-14 1995, Boston, Massachusetts, 1-18.	
"	X	~~"Internet Systems", Internet Systems Enterprise Product~~ Guide, http://www.dbmsmag.com/prods.html 12/30/2005, 12 pages	
"	Y	~~Parsons, Michael, "Interview: Next Computer's Landwehr Talks~~ WebObjects", http://.javaworld.com/javaworld/jw-03-1996/idgns.java 1995/idgns.java 1995.023.html 2/5/2006, 2 pages.	

EXAMINER	DATE CONSIDERED
M. Stephen	6-10-2008

EXAMINER: Initial if citation considered, whether or not citation is in conformance with MPEP § 609. Draw line through citation if not in conformance and not considered. Include copy of this form with next communication to the applicant.

DAL01:952278.1

PTO-1449

Information Disclosure Citation in an Application

Application No.	Applicant(s)	
90/008342	Lowery, et al.	
Docket Number	**Group Art Unit**	**Filing Date**
066241.0125	3992	November 27, 2006

U.S. PATENT DOCUMENTS

		DOCUMENT NO.	DATE	NAME	CLASS	SUBCLASS	FILING DATE
	A						
	B						
	C						
	D						
	E						
	F						
	G						
	H						
	I						
	J						
	K						
	L						
	M						
	N						

		DOCUMENT NO.	DATE	COUNTRY	CLASS	SUBCLASS	TRANSLATION YES	TRANSLATION NO
	O							
	P							
	Q							
	R							
	S							

NON-PATENT DOCUMENTS

		DOCUMENT (Including Author, Title, Source, and Pertinent Pages)	DATE
COPY NOT IN FILE	T	~~Goldszmidt, et al., "Load Distribution for Scalable Web Servers: Summer Olympics 1996~~ - A Case Study", pages 1-10. duplicate see 1052	
	U	~~"The Solaris Network Cache and Accelerator"~~, A Technical White Pager, 16 pages.	
COPY NOT IN FILE	V	~~COMPUTERWORLD, 3 pages.~~ Article title, date, Author	
	W	~~Louis, Tristan, "NeXT Shows Off its WebObjects", Web Week~~, October 1995, pages 1-2.	10/1995
	X	~~PC WEEK, August 21, 1995, Volume 12, Number 33, 3 pages~~	08/21/1995

EXAMINER M. Stulman

DATE CONSIDERED 6.10.2008

EXAMINER: Initial if citation considered, whether or not citation is in conformance with MPEP § 609. Draw line through citation if not in conformance and not considered. Include copy of this form with next communication to the applicant.

PTO-1449

Information Disclosure Citation in an Application

Application No.	Applicant(s)	
90/008342	Lowery, et al.	
Docket Number	**Group Art Unit**	**Filing Date**
066241.0125	3992	November 27, 2006

U.S. PATENT DOCUMENTS

	DOCUMENT NO.	DATE	NAME	CLASS	SUBCLASS	FILING DATE
A						
B						
C						
D						
E						
F						
G						
H						
I						
J						
K						
L						
M						
N						

FOREIGN PATENT DOCUMENTS

	DOCUMENT NO.	DATE	COUNTRY	CLASS	SUBCLASS	TRANSLATION YES	TRANSLATION NO
O							
P							
Q							
R							
S							

NON-PATENT DOCUMENTS

		DOCUMENT (Including Author, Title, Source, and Pertinent Pages)	DATE
Dy NOT ON FILE	~~T~~	~~INFORMATION WEEK, 10/9/1995, 3 pages.~~ Title, Author	10/09/1995
"	~~U~~	~~O2 gateway, Article: 5801 of comp.infosystems~~.www.providers, pages 1-2.	
"	~~V~~	~~Computer Reseller News, CONTENTS, September~~ 4, 1995, 2 pages.	09/4/1995
"	~~W~~	~~Edwards, Nigel, "Object Wrapping for the WWW"~~, ANSA, May 23, 1995, 22 pages.	05/23/1995
"	~~X~~	~~Black, et al., "Objects to the rescue! or httpd: the next generation~~ operating system", 5 pages	

EXAMINER	DATE CONSIDERED
M. Stutman	6·10·2008

EXAMINER: Initial if citation considered, whether or not citation is in conformance with MPEP § 609. Draw line through citation if not in conformance and not considered. Include copy of this form with next communication to the applicant.

30 of 37

PTO-1449

Information Disclosure Citation in an Application

Application No.	Applicant(s)	
90/008342	Lowery, et al.	
Docket Number	**Group Art Unit**	**Filing Date**
066241.0125	3992	November 27, 2006

U.S. PATENT DOCUMENTS

		DOCUMENT NO.	DATE	NAME	CLASS	SUBCLASS	FILING DATE
	A						
	B						
	C						
	D						
	E						
	F						
	G						
	H						
	I						
	J						
	K						
	L						
	M						
	N						

FOREIGN PATENT DOCUMENTS

		DOCUMENT NO.	DATE	COUNTRY	CLASS	SUBCLASS	TRANSLATION YES	TRANSLATION NO
	O							
	P							
	Q							
	R							
	S							

NON-PATENT DOCUMENTS

		DOCUMENT (Including Author, Title, Source, and Pertinent Pages)	DATE
PAT NOT N FILE	T	~~Perrochon, Louis, "On the Integration of L~~egacy Information Systems into the World-Wide Web", 8 pages.	
"	U	~~Dossick, Stephen, "OzWeb: Interfacing the~~ Oz System to the World Wide Web", December 20, 1995, 12 pages.	12/20/1995
"	V	~~PC Week, October 16, 1995, Volume~~ 12, Number 41, 3 pages.	10/16/1995
"	W	~~"On the Integration of Legacy Information Systems into~~ the World-Wide", GISI'95 Tutorial - Table 2, http://www.perrochon.com/archiv/pubs/95gisi/95gisi2.html, 12/30/2005, 4 pages.	
"	X	~~ComputerWorld, October 9, 1995, Volume 29,~~ No. 41, 3 pages.	10/9/1995

EXAMINER	DATE CONSIDERED
M. Stelzer	6-10-2008

EXAMINER: Initial if citation considered, whether or not citation is in conformance with MPEP § 609. Draw line through citation if not in conformance and not considered. Include copy of this form with next communication to the applicant.

PTO-1449

Information Disclosure Citation in an Application

Application No.	Applicant(s)	
90/008342	Lowery, et al.	
Docket Number	**Group Art Unit**	**Filing Date**
90/008342	3992	November 27, 2006

U.S. PATENT DOCUMENTS

	DOCUMENT NO.	DATE	NAME	CLASS	SUBCLASS	FILING DATE
A						
B						
C						
D						
E						
F						
G						
H						
I						
J						
K						
L						
M						
N						
O						

					SUBCLASS	TRANSLATION YES	TRANSLATION NO
P							
Q							
R							
S							
T							

NON-PATENT DOCUMENTS

		DOCUMENT (Including Author, Title, Source, and Pertinent Pages)	DATE
~~U~~		~~Web+DBMS Integration", http://www.objs.com/survey/webDB.htm, December~~ 31, 2005, 20 pages.	
~~V~~		~~Google, Topic in comp.sys.next.announce Test Drive NeXT's WebObjects (tm)~~ in Revolutionary Dodge Virtual Showroom, pages 1-4.	
~~W~~		~~Google, Topic in comp.sys.next.announce NeXT announces WebObjects free~~ Download, pages 1-6.	
~~X~~		~~Google, Topic in comp.sys.next.announce, NeXT Software, Inc. invites you~~ to learn about our WebObjects, page 1-3.	
~~Y~~		~~Dossick, et al., "WWW Access to Legacy Client/Server Applications", WWW~~ Access to Legacy Client/Server Applications, page 1-13.	

PY NOT
N FILE
"
"
"
"

EXAMINER M Stahm

DATE CONSIDERED 6·10·2008

EXAMINER: Initial if citation considered, whether or not citation is in conformance with MPEP § 609. Draw line through citation if not in conformance and not considered. Include copy of this form with next communication to the applicant.

PTO-1449

Information Disclosure Citation in an Application

Application No.	Applicant(s)	
90/008342	Lowery, et al.	
Docket Number	**Group Art Unit**	**Filing Date**
066241.0125	3992	November 27, 2006

U.S. PATENT DOCUMENTS

	DOCUMENT NO.	DATE	NAME	CLASS	SUBCLASS	FILING DATE
A						
B						
C						
D						
E						
F						
G						
H						
I						
J						
K						
L						
M						
N						

	DOCUMENT NO.	DATE	COUNTRY	CLASS	SUBCLASS	TRANSLATION YES	TRANSLATION NO
O							
P							
Q							
R							
S							

NON-PATENT DOCUMENTS

		DOCUMENT (Including Author, Title, Source, and Pertinent Pages)	DATE
✓ NOT ON FILE	T	~~WWW.DBMS Gateways, http://[illegible]2.nada.kth.se/pub/~~home/cristi/Public/work/www-papers/www_db/www_dbms.html, December 30, 2005, 11 pages.	
"	U	~~Robertson, et al., "Virtual Frog Dissection: Interactive 3D graphics~~ via the Web", pages 467-474.	
"	V	~~Weibel, et al., "An Architecture for Scholarly Publishing~~ on the World Wide Web", pages 739-748 September 15, 1994.	09/15/1994
"	W	~~Yao, et al., "FORMANAGER: An Office Forms Management System"~~, ACM Transaction on Office Information Systems, Vol. 2, No. 3, July 1984, pages 235-256.	
"	X	~~Chankhunthod, et al., "A Hierarchical Internet~~ Object Cache", 14 pages.	

EXAMINER	DATE CONSIDERED
M. Stutman	6-10-2008

EXAMINER: Initial if citation considered, whether or not citation is in conformance with MPEP § 609. Draw line through citation if not in conformance and not considered. Include copy of this form with next communication to the applicant.

33 of 37

DAL01:952278.1

PTO-1449

Information Disclosure Citation in an Application

Application No.	Applicant(s)	
90/008342	Lowery, et al.	
Docket Number	**Group Art Unit**	**Filing Date**
066241.0125	3992	November 27, 2006

U.S. PATENT DOCUMENTS

		DOCUMENT NO.	DATE	NAME	CLASS	SUBCLASS	FILING DATE
	A						
	B						
	C						
	D						
	E						
	F						
	G						
	H						
	I						
	J						
	K						
	L						
	M						
	N						

FOREIGN PATENT DOCUMENTS

		DOCUMENT NO.	DATE	COUNTRY	CLASS	SUBCLASS	TRANSLATION YES	TRANSLATION NO
	O							
	P							
	Q							
	R							
	S							

NON-PATENT DOCUMENTS

		DOCUMENT (Including Author, Title, Source, and Pertinent Pages)	DATE
	T	~~Shklar, et al., "The "InfoHarness" Information~~ Integration Platform", pages 809-819.	
	U	~~Sjölin, Martin, "A WWW Front End to an~~ OODBMS", pages 511-521.	
	V	~~Pitkow, et al., "Towards an Intelligent~~ Publishing Environment", 9 pages.	
	W	~~Luotonen, et al., "World-Wide Web proxies",~~ Computer Networks and ISDN Systems 27 (1994) 3 pages.	1994
	X	~~Hurwitz, et al., "The Open Meeting: A Web-Based System~~ for Conferencing and Collaboration", 21 pages.	

EXAMINER	DATE CONSIDERED
M. Shukla	6·10·2008

EXAMINER: Initial if citation considered, whether or not citation is in conformance with MPEP § 609. Draw line through citation if not in conformance and not considered. Include copy of this form with next communication to the applicant.

PTO-1449

Information Disclosure Citation in an Application

Application No.	Applicant(s)	
90/008342	Lowery, et al.	
Docket Number	**Group Art Unit**	**Filing Date**
066241.0125	3992	November 27, 2006

U.S. PATENT DOCUMENTS

		DOCUMENT NO.	DATE	NAME	CLASS	SUBCLASS	FILING DATE
	A						
	B						
	C						
	D						
	E						
	F						
	G						
	H						
	I						
	J						
	K						
	L						
	M						
	N						

FOREIGN PATENT DOCUMENTS

		DOCUMENT NO.	DATE	COUNTRY	CLASS	SUBCLASS	TRANSLATION YES	TRANSLATION NO
	O							
	P							
	Q							
	R							
	S							

NON-PATENT DOCUMENTS

		DOCUMENT (Including Author, Title, Source, and Pertinent Pages)	DATE
DO NOT FILE	T	~~Eichmann, et al., "Integrating structured databases into the~~ Web: The MORE system", Computer Networks and ISDN Systems, 27 (1994) 8 pages.	1994
"	U	~~Varela, et al., "DB: Browsing Object Orien~~ted Databases over the Web", http://www.w3.org/Conferences/WWW4/Papers2/282, pages 1-20.	
"	V	~~Bentley, et al., "Supporting Collaborative Information~~ Sharing with the World Wide Web: The BSCW Shared Workspace System", http://www.w3.org/Conferences/WWW4/Papers/151/ 2/15/2006, pages 1-19.	
"	W	~~Clausnitzer, et al., "A WWW Interface to the OM~~NIS/Myriad Literature Retrieval Engine", http:www.igd.fhg.de/archive/1995_www95/proceedings/papers/65/omnis-www95/omnis, 2/15/2006, pages 1-16.	
MM	X	Mathews, et al., "NSSDC OMNIWeb: The First Space Physics WWW-Based Data Browsing and Retrieval System", http://www.igd.fhg.de/archive/1995_www95/proceedings/papers/68/omniweb_paper.html, 2/15/2006, pages 1-4.	

EXAMINER	DATE CONSIDERED
M Stluka	6·10·2008

EXAMINER: Initial if citation considered, whether or not citation is in conformance with MPEP § 609. Draw line through citation if not in conformance and not considered. Include copy of this form with next communication to the applicant.

PTO-1449 Information Disclosure Citation in an Application	Application No. 90/008342	Applicant(s) Lowery, et al.	
	Docket Number 066241.0125	Group Art Unit 3992	Filing Date November 27, 2006

U.S. PATENT DOCUMENTS

		DOCUMENT NO.	DATE	NAME	CLASS	SUBCLASS	FILING DATE
	A						
	B						
	C						
	D						
	E						
	F						
	G						
	H						
	I						
	J						
	K						
	L						
	M						
	N						
	O						

							TRANSLATION	
						SUBCLASS	YES	NO
	P							
	Q							
	R							
	S							
	T							

NON-PATENT DOCUMENTS

		DOCUMENT (Including Author, Title, Source, and Pertinent Pages)	DATE
MX	U	Rees, et al., "A Web of Distributed Objects", http://www.w3.org/Conferences/WWW4/Papers/85/, 2/15/2006, pages 1-22.	
—	V	~~Article, S. Anchors, pages 963-969.~~ + missing date	
MX	W	McGrath, et al., "World Wide Web servers at NCSA", 4 pages. 1994	
MX	X	Arlitt, et al., "Web Server Workload Characterization: The Search for Invariants", Web Server Workload Characterization: The Search for Invariants Abstract 1 Introduction, pages 1-12. 1996	
MX	Y	Nelson, et al., "World Wide Web Implementation of the Langley Technical Report Server", NASA Technical Memorandum 109162, September 1994, pages 1-31.	09/1994

PY NOT ON FILE

EXAMINER	DATE CONSIDERED
M. Meeks	6-10-2008

EXAMINER: Initial if citation considered, whether or not citation is in conformance with MPEP § 609. Draw line through citation if not in conformance and not considered. Include copy of this form with next communication to the applicant.

PTO-1449

Information Disclosure Citation in an Application

Application No.	Applicant(s)	
90/008342	Lowery, et al.	
Docket Number	Group Art Unit	Filing Date
066241.0125	3992	November 27, 2006

U.S. PATENT DOCUMENTS

		DOCUMENT NO.	DATE	NAME	CLASS	SUBCLASS	FILING DATE
	A						
	B						
	C						
	D						
	E						
	F						
	G						
	H						
	I						
	J						
	K						
	L						
	M						
	N						

		DOCUMENT NO.	DATE	COUNTRY	CLASS	SUBCLASS	TRANSLATION YES	TRANSLATION NO
	O							
	P							
	Q							
	R							
	S							

NON-PATENT DOCUMENTS

		DOCUMENT (Including Author, Title, Source, and Pertinent Pages)	DATE
MJ	T	Barak, et al., "A Distributed Load-balancing Policy for a Multicomputer", Department of Computer Science, The Hebrew University of Jerusalem, 13 pages. Sept 1985	
	U		
	V		
	W		
	X		

EXAMINER M. Steadman

DATE CONSIDERED 6-10-2008

EXAMINER: Initial if citation considered, whether or not citation is in conformance with MPEP § 609. Draw line through citation if not in conformance and not considered. Include copy of this form with next communication to the applicant.

37 of 37

1054

PTO-1449 **Information Disclosure Citation in an Application**	Application No. 90/008342	Applicant(s) Lowery, et al.	
	Docket Number 066241.0125	Group Art Unit 3992	Filing Date November 27, 2006

U.S. PATENT DOCUMENTS

		DOCUMENT NO.	DATE	NAME	CLASS	SUBCLASS	FILING DATE
	A						
	B						
	C						
	D						
	E						
	F						
	G						
	H						
	I						
	J						
	K						
	L						

		DOCUMENT NO.	DATE	COUNTRY	CLASS	SUBCLASS	TRANSLATION YES	TRANSLATION NO
	M							
	N							
	O							
	P							
	Q							

NON-PATENT DOCUMENTS

		DOCUMENT (Including Author, Title, Source, and Pertinent Pages)	DATE
	S	"FastCGI", http://www.fastcgi.com/om_archive/, 2/12/2006, 2,655 pages. only 948 pages - Missing pages ON FILE	
	T		
	U		
	V		

Mary Sturtevant 6-10-2008

EXAMINER: Initial if citation considered, whether or not citation is in conformance with MPEP § 609. Draw line through citation if not in conformance and not considered. Include copy of this form with next communication to the applicant.

1 of 1

PTO-1449
Information Disclosure Citation in an Application

Application No.	Applicant(s)	
90/008342	Lowery, et al.	
Docket Number	**Group Art Unit**	**Filing Date**
066241.0125	3992	11/27/2006

U.S. PATENT DOCUMENTS

		DOCUMENT NO.	DATE	NAME	CLASS	SUBCLASS	FILING DATE
MH	D	5,701,463	12/97	Malcolm			
MH	C	5,752,246	05/98	Rogers, et al.			
MH	E	5,754,772	5/98	Leaf			
MH	A	5,774,660	06/30/98	Brendel, et al.			
MH	B	5,774,668	06/30/98	Choquier, et al.			
	F						
	G						
	H						
	I						
	J						
	K						
	L						

FOREIGN PATENT DOCUMENTS

		DOCUMENT NO.	DATE	COUNTRY	CLASS	SUBCLASS	TRANSLATION YES	TRANSLATION NO
	M							
	N							
	O							
	P							
	Q							

NON-PATENT DOCUMENTS

		DOCUMENT (Including Author, Title, Source, and Pertinent Pages)	DATE
MH	S	Birman, Kenneth P. and van Renesse, Robbert; "Software for Reliable Networks"; Scientific American, May 1996; pp. 64-69	05/1996
—	~~T~~	~~Andresen, Daniel, et al; "Scalability Issues for High Performance Digital Libraries on the~~ World Wide Web; Department of Computer Science; University of California at Santa Barbara; 10 pages. + No date	
—	~~U~~	~~Andresen, Daniel, et al.; "SWEB: Towards a Scalable World Wide Web~~ Server on Multicomputers"; Department of Computer Science; University of California at Santa Barbara; 7 pages. + No date	
—	~~V~~	~~Holmedahl, Vegard, et al.; "Cooperative Caching of Dynamic Content on a Distributed~~ Web Server"; Department of Computer Science; University of California at Santa Barbara; 8 pages. + No date	

EXAMINER	DATE CONSIDERED
M. Shelton	6-10-2008

EXAMINER: Initial if citation considered, whether or not citation is in conformance with MPEP § 609. Draw line through citation if not in conformance and not considered. Include copy of this form with next communication to the applicant.

COPY NOT ON FILE

PTO-1449

Information Disclosure Citation in an Application

Application No.	Applicant(s)		
90/008342	Lowery, et al.		
Docket Number	**Group Art Unit**	**Filing Date**	
066241.0125	3992	11/27/2006	

U.S. PATENT DOCUMENTS

		DOCUMENT NO.	DATE	NAME	CLASS	SUBCLASS	FILING DATE
	A						
	B						
	C						
	D						
	E						
	F						
	G						
	H						
	I						
	J						
	K						
	L						
	M						
	N						
	O						

FOREIGN PATENT DOCUMENTS

		DOCUMENT NO.	DATE	COUNTRY	CLASS	SUBCLASS	TRANSLATION YES	TRANSLATION NO
	P							
	Q							
	R							
	S							
	T							

NON-PATENT DOCUMENTS

		DOCUMENT (Including Author, Title, Source, and Pertinent Pages)	DATE
MA	U	Overson, Nicole; "NeXT Ships WebObjects - On Time - As Promised"; Deja.com: NeXT Ships WebObjects - On Time - As Promishttp://X28..deja.com/=dnc/[ST_m=ps...EXT=927585438. 1744765032&hitnum=33.	8 pages 1996
MA	V	Hoffner, Yigal, "Interoperability and distributed application platform design", Web URL:http://www.ansa.com.uk/, 1995, ~~26~~ pages. 24 pages	1995
MA		Hoffner, Yigal, "Interoperability and Distributed Application Platform Design (conf slides), 1995, ~~60~~ pages. 59 pages	10/11/95
MA	W	Mourad, et al., "Scalable Web Server Architectures", IEEE, 6/1997, pages 12-16.	6//1997
MA	X	Dias et al, "A Scalable and Highly Available Web Server", IEEE, 1996, pages ~~85-92~~. 7 pages	1996
MA	Y	"Single System Image and Load Balancing for Network Access to a Loosely Coupled Complex", IBM TDB, Vol. 34, 2/1992, pages 464-467.	2/1992

EXAMINER	DATE CONSIDERED
M. Shutman	6-10-2008

EXAMINER: Initial if citation considered, whether or not citation is in conformance with MPEP § 609. Draw line through citation if not in conformance and not considered. Include copy of this form with next communication to the applicant.

PTO/SB/08A (07-05)
Approved for use through 07/31/2006. OMB 0651-0031
U.S. Patent and Trademark Office; U.S. DEPARTMENT OF COMMERCE
Under the Paperwork Reduction Act of 1995, no persons are required to respond to a collection of information unless it contains a valid OMB control number.

Substitute for form 1449/PTO

INFORMATION DISCLOSURE STATEMENT BY APPLICANT

(Use as many sheets as necessary)

Sheet 1 of 2

Complete if Known	
Application Number	90/___,___
Filing Date	November 21, 2006
First Named Inventor	Lowery
Art Unit	
Examiner Name	
Attorney Docket Number	

U. S. PATENT DOCUMENTS

Examiner Initials*	Cite No.[1]	Document Number Number-Kind Code[2] (if known)	Publication Date MM-DD-YYYY	Name of Patentee or Applicant of Cited Document	Pages, Columns, Lines, Where Relevant Passages or Relevant Figures Appear
MX		US- 5,701,451	12-23-1997	Rogers	
		US-			
		US-			
		US-			
		US-			
		US-			
		US-			
		US-			
		US-			
		US-			
		US-			
		US-			
		US-			
		US-			
		US-			
		US-			
		US-			
		US-			
		US-			
		US-			

FOREIGN PATENT DOCUMENTS

Examiner Initials*	Cite No.[1]	Foreign Patent Document Country Code[3]-Number[4]-Kind Code[5] (if known)	Publication Date MM-DD-YYYY	Name of Patentee or Applicant of Cited Document	Pages, Columns, Lines, Where Relevant Passages Or Relevant Figures Appear	T[6]

Examiner Signature		Date Considered	6/10/08

*EXAMINER: Initial if reference considered, whether or not citation is in conformance with MPEP 609. Draw line through citation if not in conformance and not considered. Include copy of this form with next communication to applicant. [1] Applicant's unique citation designation number (optional). [2] See Kinds Codes of USPTO Patent Documents at www.uspto.gov or MPEP 901.04. [3] Enter Office that issued the document, by the two-letter code (WIPO Standard ST.3). [4] For Japanese patent documents, the indication of the year of the reign of the Emperor must precede the serial number of the patent document. [5] Kind of document by the appropriate symbols as indicated on the document under WIPO Standard ST.16 if possible. [6] Applicant is to place a check mark here if English language Translation is attached.

This collection of information is required by 37 CFR 1.97 and 1.98. The information is required to obtain or retain a benefit by the public which is to file (and by the USPTO to process) an application. Confidentiality is governed by 35 U.S.C. 122 and 37 CFR 1.14. This collection is estimated to take 2 hours to complete, including gathering, preparing, and submitting the completed application form to the USPTO. Time will vary depending upon the individual case. Any comments on the amount of time you require to complete this form and/or suggestions for reducing this burden, should be sent to the Chief Information Officer, U.S. Patent and Trademark Office, P.O. Box 1450, Alexandria, VA 22313-1450. DO NOT SEND FEES OR COMPLETED FORMS TO THIS ADDRESS. **SEND TO: Commissioner for Patents, P.O. Box 1450, Alexandria, VA 22313-1450.**

If you need assistance in completing the form, call 1-800-PTO-9199 (1-800-786-9199) and select option 2.