EXHIBIT 8

CCIIT SG XV
Specialists Group on Coding
for Visual Telephony

Doc. No 383
Sept. 88, Paris

Title: Patent Applications by PKI on low bitrate video encoding

Source: PKI Nürnberg, FRG

1. Digital filter for video applications
   filing date:
   10/6/86

2. Hybrid coder with digital low-pass-filter controlled by the motion vector and/or the quantizer index
   filing date:
   19/4/86, 18/6/86, 8/11/86

3. Bitrate reduction by a two-dimensional coding table for encoding the quantizer indices in a hybrid coder
   filing date:
   13/9/86, 8/11/86, 23/5/87

4. A method for motion estimation in a motion compensated hybrid coder
   filing date:
   6/6/87

5. Reduction of side information in a hybrid coder by macro blocks
   filing date:
   6/7/87, 10/8/87, 28/12/87

6. Control of the quantizer in a hybrid coder by the coder status
   filing date:
   27/3/87

EXHIBIT 9

PHILIPS

PHILIPS

Philips Kommunikations Industrie AG

Philips Kommunikations Industrie AG · Postfach 3538 · 8500 Nürnberg 1

Hauptverwaltung
Thurn-und-Taxis-Straße 10
8500 Nürnberg 10

Mr. S. Okubo
Project Team-3 (Room 922A)
NTT Human Interface Laboratories
I-2356 Take, Yokosuka-shi
Kanagawa-ken 238-03
Japan

Öffentliche
Kommunikationssysteme
Teilnehmernahe Systeme

Ihre Zeichen und Nachricht	Unser Zeichen	Durchwahl (0911) 526-	Telotex	Datum
	OBA-Sp/Kp	2581		10.10.1989

CCITT Patent Statement for p x 64 kbit/s video coding

In case the p x 64 kbit/s video coding is made the subject of a CCITT Recommendation, Philips is willing to grant a non-exclusive, non-transferable license on reasonable and non-discriminatory terms and conditions under patents that Philips hold, but

- only to the extent they cover features contained in this CCITT Recommendation,
- only for use in equipment fully complying with this CCITT Recommendations, and
- on the condition that any requesting party express willingness to grant to Philips licenses on no less favourable terms and conditions under its patents, if any, for use in complying with this CCITT Recommendation.

With kind regards

J. Speidel

(Dr. J. Speidel)

(Dr. C. Brandis)

7
#579

Vorsitzender des Aufsichtsrats: Lolke J. Smit
Vorstand: Manfred Conrad (Vorsitzender),
Hans-Peter Friedrichsen, Michael Günther, Horst Herrmann,
Dieter Kaden, Dr. Heinz Thielmann
Sitz der Gesellschaft: Nürnberg
Registergericht:
Amtsgericht Nürnberg, Reg.-Nr. HR B 5400

Bankkonten:
Bayerische Vereinsbank AG Nürnberg
Nr. 2145600 (BLZ 760 200 70)
Commerzbank AG Nürnberg
Nr. 5330550 (BLZ 760 400 61)
Deutsche Bank AG Nürnberg
Nr. 320770 (BLZ 760 700 12)
Dresdner Bank AG Nürnberg
Nr. 1090070 (BLZ 760 800 40)

Thurn-und-Taxis-Straße 10
8500 Nürnberg 10
Telefon (0911) 526-0
Telex 622634-0 pkd
Telefax (0911) 526-2850
Btx * 30400 #
Videokonferenz-Raum
(0911) 526-4188

8191-189H

BBO

CCITT SGXV
Working Party XV/1
Specialists Group on Coding for Visual Telephony

Source: N.V. Philips' Gloeilampenfabrieken (PHILIPS)
Title : Statement on patents on the p x 64 kbit/s video coding for audiovisual services

In case a preferred algorithm for the p x 64 kbit/s video coding for audiovisual services is made the subject of a CCITT Recommendation, PHILIPS is willing to grant a non-exclusive, non-transferable license on reasonable and non-discrimatory terms and conditions under patents that PHILIPS holds, but

- only to the extent they cover features contained in this CCITT Recommendation,
- only for use in equipment fully complying with this CCITT Recommendation, and
- on the condition that any requesting party express willingness to grant PHILIPS licenses on no less favourable terms and conditions under its patents, if any, for use in complying with this CCITT Recommendation.

Date: October 5, 1989

EXHIBIT 10

Improved Hybrid Coders with 2D-Signal Processing for Moving Pictures

Joachim Speidel and Peter Vogel

Philips Kommunikations Industrie AG, Nürnberg
Federal Republic of Germany

Abstract

2D-signal processing techniques for interframe hybrid coders with motion compensating prediction are investigated. "Equivalent" 2D-filters and "equivalent" coder structures are proposed to improve the subjective quality of moving pictures encoded at about 64 to m x 384 kbit/s (m = 1, 2, ..., 5). An optimum predictor is derived and it is concluded that this solution is quite close to the concept of equivalent filters. The complete coding scheme is described.

1. Introduction

Encoding of video signals in the 64 to m x 384 kbit/s range (m = 1, 2, ..., 5) is a great challenge, as these bit-rates can be transmitted in the near future using the emerging ISDN. To reach this goal spatial and temporal subsampling techniques, interframe coding, motion compensating prediction and frame interpolation as well as transform coding have been applied [1 – 8]. This paper deals with an improved hybrid coding scheme with motion compensating prediction. The principle block diagram of a hybrid coder is depicted in Fig. 1a. The difference d between a block x of input pels and the displaced predicting block $\hat{x}(V)$ is transformed (transform T), quantized (quantizer Q) and encoded (variable length coder VLC). $\hat{x}(V)$ is taken from the previous frame which is stored in the frame memory FM. In the considered scheme, the displacement vector V is the result of a block matching technique performed in the motion estimator (ME). To every coded block a displacement vector V is associated and transmitted as side information. The buffer memory (BM) provides a constant output bit-rate for the transmission channel.

Bit rate reduction is done by degrading the coefficients of the transformed block difference D. The various schemes known at present differ mainly in this degradation process, e.g. [4, 7, 8]. Mostly, insignificant coefficients, in particular coefficients representing high spatial frequencies, are coarsly quantized and even dropped due to zonal sampling. Our computer simulations at bit rates of approx. 48 to 300 kbit/s have shown, that these methods cause distortions which are of artificial nature, e.g. new patterns in the moving picture or "overshoot-effects".

We introduce and investigate new techniques which allow for a controlled filtering and quantizing in the hybrid coding scheme.

2. A hybrid coder with equivalent filters

In Fig. 1b a hybrid coder is shown where the quantizer is modelled by additive noise N_Q and where a filter operator H is introduced. In the following list, the symbols are explained.

- $x, \hat{x}, \tilde{x}$ blocks of n x n pels, n = 8 except otherwise noted
- H scalar operator in the transform domain, i.e. every coefficient of the input block is multiplied by a real number (frequency weighting)
- N_Q quantizing noise in the transform domain
- T transformation operator
- n_Q quantizing noise in the space domain, i.e. n_Q is the inverse transform of N_Q
- h giving the effect of H in the space domain, i.e.

$$h = T^{-1}HT \qquad (1)$$

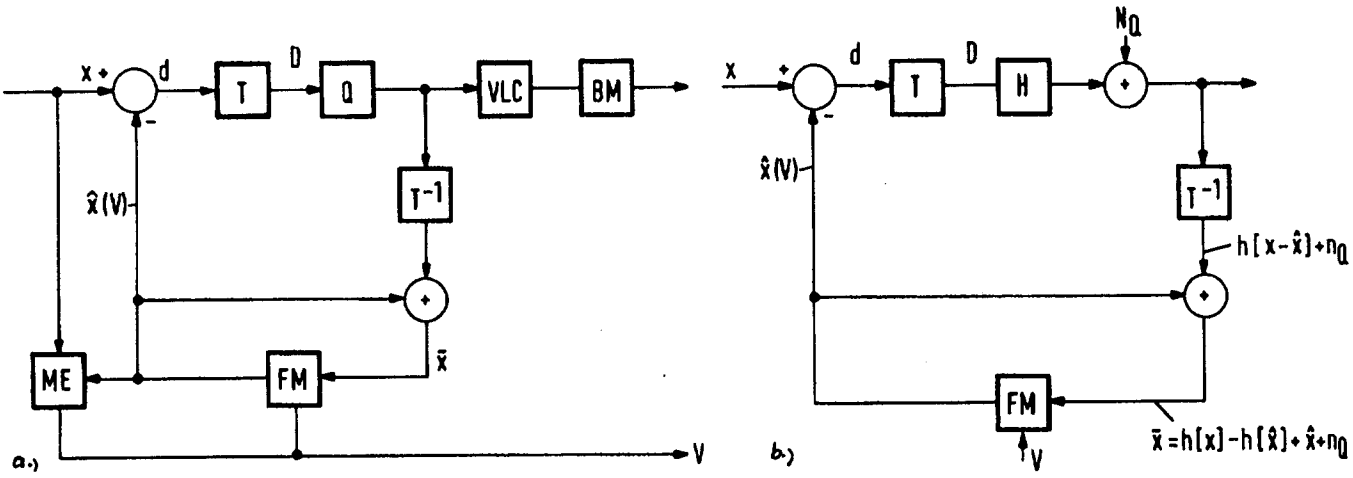

Fig. 1 Hybrid coder with motion compensating prediction
a) principle block diagram
b) with frequency weighting filter H and quantizer modelling

E.g. in the special case of zonal sampling H multiplies every coefficient of D to be transmitted by 1 and every coefficient of D to be suppressed by zero.

In Fig. 1b the reconstructed block $\tilde{x}$ is computed. Obviously, $\tilde{x}$ is composed of $h[x]$, which is the input block degraded by filtering with h and n_Q which is quantizing noise. Due to the interframe technique the term $\hat{x}$-$h[\hat{x}]$ occurs, which consists of the block $\hat{x}$ in the previous frame and its filtered version $h[\hat{x}]$.
As a result, zonal sampling or frequency weighting in interframe coding yields additional distortions compared to intraframe techniques.

To eliminate the distortion $\hat{x}$-$h[\hat{x}]$, a 2D-filter is introduced and described by the operator h as shown in Fig. 2. The two filters H and h are denoted as "equivalent", because they provide the same effect. H operates in the transform domain an h in the space domain. We obtain for the reconstructed block [9]

$$\tilde{x} = h[x] + n_Q \qquad (2)$$

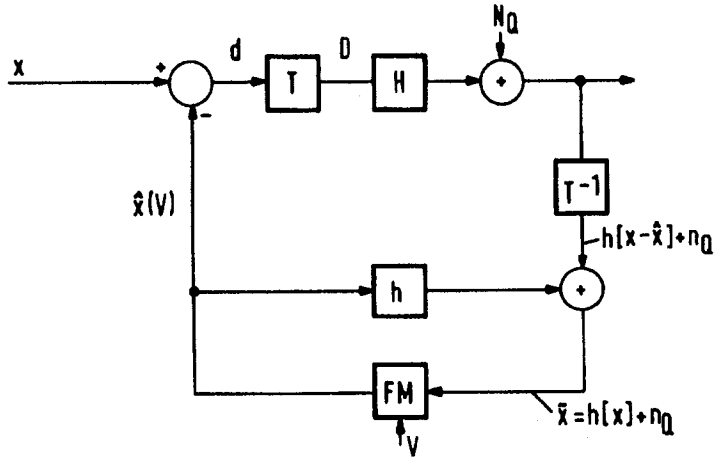

Fig. 2 Hybrid coder with motion compensating prediction and with equivalent filters H and h

Obviously, $\tilde{x}$ is composed of the filtered input block $h[x]$ and the quantizer noise n_Q. For H = 1 (no frequency weighting) we get from eq. (2)

$$\tilde{x} = x + n_Q \qquad (3)$$

and the reconstructed signal is now corrupted by quantizing noise only. On the other hand, if the quantizer is switched off, the reconstructed block becomes

$$\tilde{x} = h[x] \qquad (4)$$

and is degraded by filtering effects. By controlling the filters H and h as well as the quantizer, the degradations within moving blocks x can be shared between filtering effects (blur of moving objects) and quantizing distortions. Our computer simulations at 48 to 300 kbit/s show, that pure quantization of blocks results in unacceptable artefacts. Moderate filtering and quantization have proven to be a good compromise to provide a better subjective quality. Before describing the details of controlling the filters and the quantizer we will consider the filter operators H and h more closely.

For example, assume a separable scalar operator H, i.e.

$$H = H_1[\ ]H_2 \qquad (5a)$$

where

H_1 and H_2 are diagonal matrices with

$$H_1 = H_2 = \begin{bmatrix} 1 & & & & & & & \\ & 0.96 & & & & & & \\ & & 0.85 & & & 0 & & \\ & & & 0.69 & & & & \\ & & & & 0.5 & & & \\ & 0 & & & & 0.31 & & \\ & & & & & & 0.15 & \\ & & & & & & & 0.04 \end{bmatrix} \qquad (5b)$$

With eq. (5a) the multiplier for the (i,j)-th coefficient of the input block is given by $H_1(i,i)\ H_2(j,j)$. The separable operator H in eq. (5a) maintains the DC-part of the input block D, and the energy concentration effect of the used transform is increased. Assuming a constant output bit-rate of the source encoder in Fig. 2, the higher energy concentration allows for a finer quantizing of coefficients, which results in less quantizing noise. According to eq. (2) the reduced quantizing noise must be payed for by filtering effects.

As a consequence of the separability of the operator H the filter operator h is separable too, i.e.

$$h = h_1[\ ]h_2 \qquad (6a)$$

holds. According to eq. (6a) h_1 operates as a vertical filter and h_2 operates as a horizontal filter.

For the two dimensional discrete cosine transform (DCT) [7], we obtain from eq.(1) with eq. (5b)

$$h_1 = h_2 = 1/4 \begin{bmatrix} 3 & 1 & 0 & 0 & 0 & 0 & 0 & 0 \\ 1 & 2 & 1 & 0 & 0 & 0 & 0 & 0 \\ 0 & 1 & 2 & 1 & 0 & 0 & 0 & 0 \\ \cdot & & & & & & & \cdot \\ \cdot & & & & & & & \cdot \\ 0 & 0 & 0 & 0 & 0 & 1 & 2 & 1 \\ 0 & 0 & 0 & 0 & 0 & 0 & 1 & 3 \end{bmatrix} \qquad (6b)$$

As can be seen the one-dimensional filter given in eq. (6b) is space variant but is very similar to the space invariant filter with the impulse response

$$h_{121}(p) = 1/4 \begin{cases} 1 \text{ for } p = \pm 1 \\ 2 \text{ for } p = \overline{0} \\ 0 \text{ elsewhere} \end{cases} \qquad (7)$$

Whereas h_{121}-filtering requires values outside the block boundaries, the filter given by eq. (6b) operates within a block, i.e. exclusively the pels within a block are taken for computation. Only at the block boundary positions h_1 in eq. (6b) differs from h_{121}-filtering. At these positions the missing signal values outside the block are

substituted by boundary position values. More general, for the DCT every (one dimensional) scalar operator effects a filtering in the space domain with a single impulse response, where the missing signal values are obtained by reflection at the block boundaries and subsequent continuation with the period 2n. This signal continuation which is called even-periodical, is one of those continuations which are suitable to define convolution operators on a finite area, i.e. the operators can be convoluted to one another [9].

For example consider the diagonal matrices

$$\tilde{H}_k(Z,m) = (ZH_k + (1-Z)I)^m,\ k = 1, 2;\ 0 \le Z \le 1,\ m \ge 0 \qquad (8)$$

where Z defines the convex combination of the matrix H_k given by eq. (5b) with the unit matrix I. The operator $\tilde{H}_k(Z, m)$ effects a filtering in the space domain with the single impulse response

$$\tilde{h}_k(Z, m) = (Zh_{121} + (1-Z)\delta)^{*m};\ k = 1, 2 \qquad (9)$$

where the missing signal values are replaced using the even periodical continuation. $*^m$ denotes convolution applied m times, and δ is the Dirac impulse in the discrete signal space. Because the even-periodical continuation provides acceptable estimation only for signal values outside the block next to it, m should not exceed 2 to avoid blocking effects. Varying the parameters Z and m the distortions within the reconstructed block can be shared between filtering effects and quantizing noise. If the length of the displacement vector is used to control the quantizer and the filter, fast moving parts within the image are blurred whereas the quantizing noise is reduced for the whole picture. This yields better subjective picture quality than simple quantization at 48 to 300 kbit/s bit-rate.

In Tab. 1 a flow-diagram for the adjustment of the filters H and h as well as the quantizer is shown as an example. The filter (parameters Z and m) and the quantizer step size can be modified with an iterative procedure (steps 4 to 7) until a given maximum number B of bits per coded block is not exceeded. For a given channel bit-rate, B depends on the actual buffer fullness. Besides this interative procedure for adjusting the filters and the quantizer, also a simple one-shot method can perform well (Tab. 1,b) using a-priori knowledge taken from experiments with typical moving scenes.

3. Equivalent coder structures

In Fig. 2 the filters H and h operate in different domains. We will now derive "equivalent" coder structures. Equivalent means, that the coders provide the same reconstructed signal $\tilde{x}$. Fig. 3c shows a coder, which contains space domain filters h. In Figs. 3a, b intermediate steps towards this solution are depicted: Starting from Fig. 2 and using eq. (1) H can be replaced by the space domain filter h in front of the transform T, which leads to Fig. 3a. As the filter h is linear, subtraction and filtering can be interchanged. The result is given in Fig. 3b. In the final step, the two filters h encircled by dashed lines can be replaced by one filter after the frame memory, as shown in Fig. 3c.

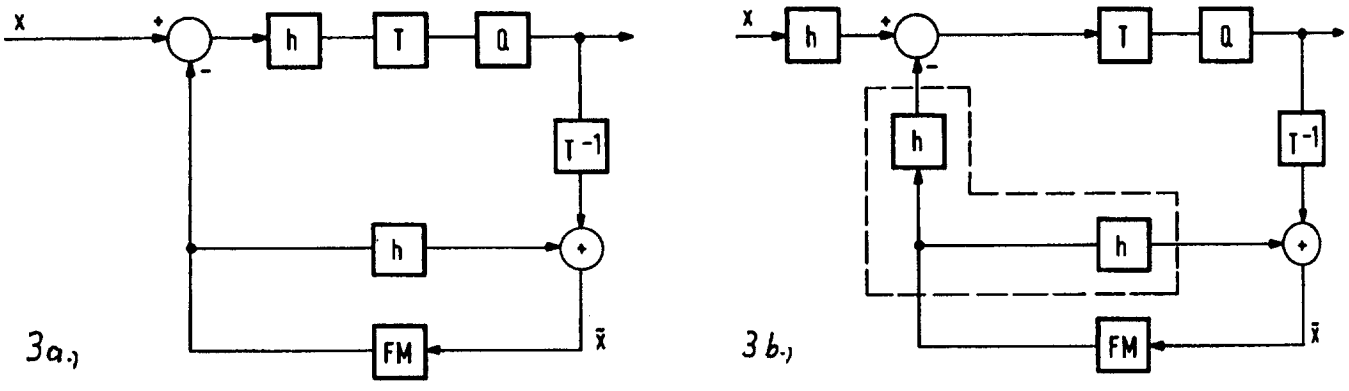

Fig. 3a, b Hybrid coders with motion compensating prediction equivalent to Fig. 2; intermediate steps towards the final solution in Fig. 3c

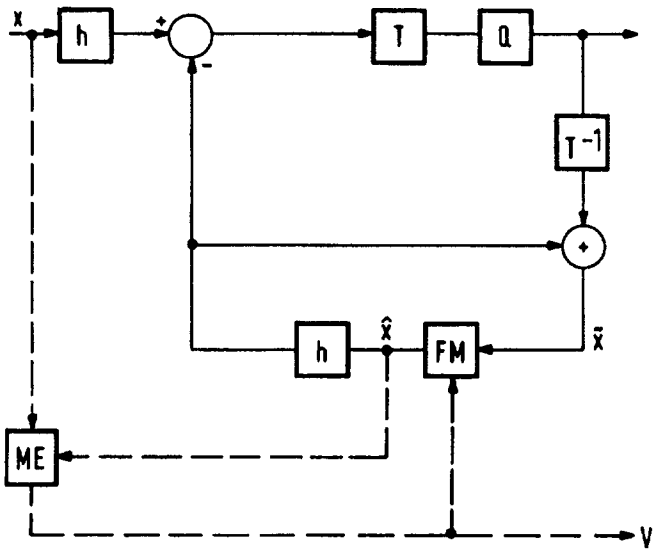

Fig. 3c Hybrid coders with motion compensating prediction equivalent to Fig. 2

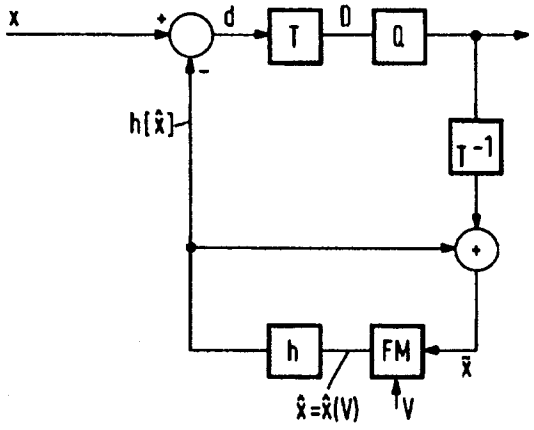

Fig. 4 Hybrid coder with motion compensating and optimum prediction

An example for the control of the two filters h in Fig. 3c is explained in the flow-diagram in Tab. 2. The procedure is quite similar to Tab. 1 except that the adjustment of h has now to be done before computation of the prediction error $h[x] - h[\hat{x}]$. The iterative procedure (a) is more time consuming than with Fig. 2, as in every iteration step the transformation has to be performed.

step
1. new input block x
2. compute displacement vector V
3. compute $x - \hat{x}(V)$
4. adjust filter H
5. adjust quantizer
   for method a) Goto 6
   for method b) Goto 8
6. count number of bits per coded block (A)
7. compare A with available bits/block (B)
   If A > B Goto 4.
   If A ≤ B Goto 8.
8. adjust filter h
9. compute reconstruction block $\tilde{x}$
   Goto 1.

Tab. 1: Flow-diagram for controlling the filters H, h and the quantizer in Fig. 2
method a) iterative procedure
method b) one-shot method

step
1. new input block x
2. compute displacement vector V
3. adjust filter h
4. compute $h[x] - h[\hat{x}]$
5. adjust quantizer
   for method a) Goto 6
   for method b) Goto 8
6. count number of bits per coded block (A)
7. compare A with available bits/block (B)
   If A > B Goto 3.
   If A ≤ B Goto 8.
8. compute reconstruction block $\tilde{x}$
   Goto 1.

Tab. 2: Flow-diagram for controlling the filters h and the quantizer Q in Fig. 3c
method a) iterative procedure
method b) one-shot method

If the transform is performed at the input of the coders in Figs. 2 and 3c, equivalent structures result where all signals are in the transform domain. As a consequence T^{-1} is not required in Figs. 2 and 3c, and filters h have to be replaced by H. With these structures, motion estimation is more difficult to implement.

4. 2D-filters as interframe predictors

4.1 Improvement by low pass filtering

A single filter after the frame memory can improve the performance of the hybrid coder (Fig. 4). In the following we derive an optimum filter and show its performance. The filter will be designed in the transform domain.

Optimum weighting coefficients H_{ij} for the filter h are obtained by minimizing the mean energy $E(D_{ij}^2)$ of every transform coefficient D_{ij} of the prediction error D:

$$E(D_{ij}^2) = E\left[(X_{ij} - H_{ij}\hat{X}_{ij})^2\right] = \min \qquad (10a)$$

where X_{ij} and $\hat{X}_{ij}$ denote the (i,j)-th transform coefficient of the input block x and the block $\hat{x}$, respectively. Setting the partial derivative of $E(D_{ij}^2)$ with respect to H_{ij} equal to zero yields the weighting coefficients

$$H_{ij} = \frac{E(X_{ij}\,\hat{X}_{ij})}{E(\hat{X}_{ij}^2)} \; ; \; 1 \leq i, j \leq n \qquad (10b)$$

Tab. 3 shows the optimum H_{ij} for n=8. As can be seen the filter does not effect the DC-part of its input block, but the high frequency coefficients are attenuated. Simply said, intraframe mode is preferable for high frequency coefficients. Because coefficients except the DC-coefficient are expectation free, high frequency coefficients of the input block x and the block $\hat{x}$ are highly decorrelated. This result holds for various bit-rates and thus for different magnitudes of the quantizing noise. Therefore we conclude that the temporal decorrelation of high frequency coefficients is a property of the image source.

The filter h in the space domain resulting from Tab. 3 is given by eq. (1). Because H is not separable, the same holds for h.

We define the performance measure

$$G_{ij} = \left[E(D_{ij}^2)\Big|_{\substack{\text{without}\\ \text{filter}}} - E(D_{ij}^2)\Big|_{\substack{\text{with}\\ \text{filter}}} \right] \Big/ E(D_{ij}^2)\Big|_{\substack{\text{without}\\ \text{filter}}} \qquad (11)$$

G_{ij} is listed in Tab. 4. As can be seen, the improvements due to the filter are significant high for high frequency coefficients which leads to a reduction of high frequency quantizing noise in the hybrid coder.

i \ j	1	2	3	4	5	6	7	8
1	100	99	94	89	83	69	56	26
2	98	91	87	76	68	48	28	14
3	94	85	79	70	61	42	19	2
4	90	78	68	61	47	34	9	4
5	89	69	60	45	44	12	6	1
6	82	57	43	27	13	11	3	1
7	72	31	26	12	2	4	2	1
8	49	11	12	2	3	-1	1	0

Tab. 3 Weighting coefficients H_{ij} for the optimum predictor h in Fig. 4 (100 $\hat{=}$ 1)

i \ j	1	2	3	4	5	6	7	8
1	0	0	3	4	6	16	23	48
2	0	4	6	12	15	27	39	58
3	3	7	11	15	19	32	48	67
4	6	10	15	19	29	41	54	71
5	7	17	20	27	32	53	61	72
6	11	25	32	42	51	58	68	73
7	20	42	46	57	66	69	77	80
8	38	62	64	74	79	83	84	86

Tab. 4 Performance measure G_{ij} in per cent defined in eq. (11) for the optimum predictor given in Tab. 3

The high gain together with the high decorrelation between X_{ij} and $\hat{X}_{ij}$ for high frequency coefficients yield

$$E(\hat{X}_{ij}^2) > E(X_{ij}^2) \; ; \; i,j >> 1 \qquad (12)$$

which is a consequence of noisy blocks $\hat{x}$.

The filter operator in Tab. 3 which is well determined in the space domain by eq. (1), requires an expensive realization in the space domain, but it can be approximated by a filter defined in eqs. (6a, b). The weighting coefficients H_{ij} are given in Tab. 5a. In Tab. 5b the performance is shown in terms of the measure G_{ij}. The negative signs show that this filter makes the prediction worse than without filtering for some frequencies, but the filter yields similar high gains for high frequency coefficients as the optimum filter in Tab. 3.

i \ j	1	2	3	4	5	6	7	8
1	100	96	85	69	50	31	15	4
2	96	93	82	67	48	30	14	4
3	85	82	73	59	43	26	13	3
4	69	67	59	48	35	21	10	3
5	50	48	43	35	25	15	7	2
6	31	30	26	21	15	10	5	1
7	15	14	13	10	7	5	2	1
8	4	4	3	3	2	1	1	0

Tab. 5a Weighting coefficients H_{ij} for the filter defined in eqs. (6a, b)

i \ j	1	2	3	4	5	6	7	8
1	0	-2	-1	-3	-9	4	11	47
2	0	4	6	12	13	26	38	58
3	2	7	11	14	17	31	47	67
4	-2	10	15	19	29	40	54	71
5	-23	15	19	27	31	52	61	72
6	-30	21	31	42	51	58	68	73
7	-18	41	46	57	66	69	77	80
8	26	62	64	74	79	83	84	86

Tab. 5b Performance measure G_{ij} in per cent defined in eq. (11) for the filter in Tab. 5a as predictor

At first, the filter h is assumed to be switched on for a motion block and switched off for a fixed (background) block. The improvement of the prediction can be slightly increased by introducing different filters depending on the displacement vector. Tab. 6 shows the improvement for the following displacement vector classes

- displacement vector is zero
- pure horizontal motion
- pure vertical motion
- both horizontal and vertical motion

where an optimum filter is used for every class.

4.2 Motion compensating prediction with fractional displacement vectors

Displacement vectors allowing for a minimum shift of less than the unit pel-distance 1, e.g. 1/2, are called fractional displacement vectors. In principle, such vectors may shift a block into a fictitious position in between the orthogonal pel-grid of the input signal x. An interpolation filter has to be used to compute the missing pels at positions of the input pel-grid. This can be done by the filter h in Fig. 4. The filter characteristic varies with the fractional part of the displacement vector. The interpolation filter for a fractional displacement 1/2 to the right and downwards is given by the separable filter operator in eq. (6a) with

$$h_1 = h_2 = 1/2 \begin{bmatrix} 1 & 1 & 0 & 0 & 0 & 0 & 0 & 0 \\ 0 & 1 & 1 & 0 & 0 & 0 & 0 & 0 \\ \cdot & & & & & & & \cdot \\ \cdot & & & & & & & \cdot \\ 0 & 0 & 0 & 0 & 0 & 0 & 0 & 2 \end{bmatrix} \qquad (13a)$$

Although no filtering is performed in case of integer displacement vectors, there is also an improvement for high frequency coefficients (Tab. 7). Because the input block x and the block $\hat{x}$ are highly decorrelated for high frequency coefficients, a attenuation of high frequency coefficients by the interpolation filter results. In fact, eq. (1) applied to eq. (13a) yields

$$H_1 = H_2 = 1/100 \begin{bmatrix} 100 & -17 & 0 & -15 & 0 & -10 & 0 & -3 \\ 0 & 96 & -31 & 0 & -19 & 0 & -10 & 0 \\ 0 & 8 & 85 & -37 & 0 & -16 & 0 & -5 \\ 0 & 0 & 17 & 69 & -38 & 0 & -12 & 0 \\ 0 & 1 & 0 & 24 & 50 & -35 & 0 & -7 \\ 0 & 0 & 3 & 0 & 26 & 31 & -28 & 0 \\ 0 & 0 & 0 & 5 & 0 & 23 & 15 & -17 \\ 0 & 0 & 1 & 0 & 4 & 0 & 15 & 4 \end{bmatrix} \qquad (13b)$$

Thus an improvement of the prediction for high frequency coefficients is mainly based on the low-pass effect of the interpolation process. Compared to the filters discussed earlier, the interpolation filter given by eq. (13a) provides also a gain for low frequency coefficients (Tab. 7). Simulations show that an improvement of the prediction for high frequency coefficients is more important for a good picture quality than for low frequency coefficients. Thus we conclude that motion compensating prediction with fractional displacement vectors yields improvements which are mainly due to the low-pass characteristic of the interpolation process.

i \ j	1	2	3	4	5	6	7	8
1	0	0	3	5	8	18	26	50
2	1	6	8	16	18	30	41	60
3	7	9	14	18	24	35	48	67
4	11	15	19	22	34	46	54	71
5	17	24	23	28	38	53	61	72
6	24	33	35	43	51	59	68	73
7	34	44	50	57	66	69	77	80
8	49	63	65	74	79	83	84	86

Tab. 6 Performance measure G_{ij} in per cent defined in eq. (11) for adaptive prediction using four filters controlled by the displacement vector

i \ j	1	2	3	4	5	6	7	8
1	16	16	12	14	16	24	31	44
2	17	12	14	16	18	26	35	41
3	14	17	14	18	20	30	39	51
4	12	13	20	23	23	36	41	56
5	12	17	21	24	29	36	45	56
6	22	23	26	32	37	44	53	63
7	31	35	42	46	51	57	64	71
8	46	48	51	60	60	68	73	77

Tab. 7 Performance measure G_{ij} in per cent defined in eq. (11) for the interpolation filter in eq. (13a) for fractional displacements 1/2

5. Description of the complete coder

We describe the main parts of the source encoder in Fig. 1a for moving pictures at about 48 kbit/s to 2 Mbit/s. The format of the input picture is chosen according to [10]

Luminance signal : 352 x 288 pels/picture
colour difference signals : 176 x 144 pels/picture
picture rates : 10, 15, 30 Hz, noninterlaced pictures

For the very low bit-rate end of approx. 64 kbit/s, the picture rates are less than or equal to 10 Hz. The block sizes for the DCT and motion estimation are 8 x 8 or 16 x 16. The quantizer characteristic is uniform with step size s. Eigth different step sizes are applied adaptively under the control of the buffer fullness. The displacement vector V is computed using a three-step method. The minimum absolute error norm is employed as a criterion. The horizontal and vertical components of the displacement vectors vary between -7, ..., 7 with integer steps. 2D-filters h are employed as shown in Figs. 2-4. The filter characteristic is controlled by the displacement vector and the buffer fullness.

An effective procedure for coding of the quantized and scanned transform coefficients is given in [8]. With this procedure the magnitudes of the coefficients and their addresses given by a number of consecutive zeros (runlength L) are coded separately by two codeword tables. The procedure makes use of the statistical property of many runs of consecutive zeros. We have found interesting statistical properties between a runlength of zeros and the magnitude M of the following nonzero coefficient. In Tab. 8 the frequency of occurrence of the composite event (L, M) is listed. As can be seen the probability P(M|L) for small magnitudes M increases with an increasing runlength L of zeros.
Coding L and M in Tab. 8 as a composite event with a (two-dimensional) Huffman code table yields a gain of more than 10 per cent compared to the procedure in [8]. The comparison has been done under the assumptions

- both procedures use codes optimized for Tab. 8
- one bit is spent for the sign of a coefficient unequal to zero
- six bits are spent for a coefficient magnitude greater than or equal to nine. The codewords for the last column in Tab. 8 signal that the magnitude is greater than or equal to nine.

The two-dimensional Huffman code table matched to Tab. 8 can be well approximated by the code table given in the appendix. This table has the advantages

- simple decoding due to the simple structure of its code words
- the codeword length is relatively short and doesn't exceed the value 16
- the number of table entries is small by using separate coding as well as common coding of the runlength and magnitude
- a good coding efficiency holds for various source materials different from that in Tab. 8.

L \ M	1	2	3	4	5	6	7	8	≥ 9
0	31977	13440	6553	3508	2119	1274	770	541	1488
1	14682	4638	1853	797	407	229	144	88	176
2	8840	2088	674	263	121	58	29	15	20
3	5880	1310	382	132	68	28	8	6	12
4	5103	920	209	79	36	9	2	3	10
5	4029	702	175	75	25	13	10	4	3
6	3128	405	93	23	13	4	1	4	1
7	2579	348	76	17	7	6	1	1	2
8	2093	256	57	14	2	2	1	0	1
9	1716	244	50	17	8	3	2	0	0
10	1313	124	20	5	2	0	0	0	0
11	1233	88	13	6	0	0	0	0	0
12	1106	100	13	6	2	0	0	0	0
13	1082	95	9	0	0	1	0	0	0
14	936	42	2	1	0	0	0	0	0
15	687	22	3	1	0	0	0	0	0
16	377	21	2	0	0	0	0	0	0
17	377	15	2	0	0	0	0	0	0
⋮	⋮								⋮
63	0	0	0	0	0	0	0	0	0

Tab. 8 Frequency of occurrence of the composite event (L, M) measured with 38004 blocks of size 8 x 8 (L runlength of zeros, M magnitude of coefficient following a runlength of zeros)

6. Discussion and conclusions

We have investigated 2D-filtering techniques applied to interframe hybrid coders with DCT. The performance of the different methods were evaluated.
The basic coding scheme in Fig. 1b was analyzed. H performs a frequency weighting. It was found, that the reconstructed signal $\tilde{x}$ is not only affected by quantizing noise n_Q, but also distorted by $\hat{x}-h[\hat{x}]$, which is typical for the interframe technique. h was denoted as "equivalent" to H, because it performs the same effect as H, but it operates in the spatial domain. As h represents a low-pass filter, $\hat{x}-h[\hat{x}]$ is a high frequency distortion. In Fig. 2, this distortion is compensated for by a filter h. By controlling the filters H and h as well as the quantizer, e.g. by using the length of the displacement vector and the buffer fullness, the distortions can be shared between filtering effects (blur) and quantizing noise. The coder in Fig. 3c provides the same reconstruction block $\tilde{x}$ as Fig. 2, but it exhibits only space domain filters h. The structures in Fig. 2 and 3c have been denoted as "equivalent". Motivated by Fig. 3c, a coder with only a filter h after the frame memory FM was derived (Fig. 4). The filter h was designed such, that the mean energy of every transform coefficient D_{ij} of D is minimum. It turned out that the resulting optimum "predictor" h is a low-pass filter. Obviously, high frequencies in $\hat{x}$ cannot be used to compensate for the high frequency components in the input block x to get a small difference block d. In other words, high frequency components in x and $\hat{x}$ are nearly uncorrelated.

Using these results, we can close the circle to the coder structure in Fig. 3c. The effect of the filter h after the frame memory FM in Fig. 3c is the same as in Fig. 4. But with the additional input filter h a controlled blur of moving blocks can be performed to balance the total distortions between blur and quantizing noise. The same holds for the coder in Fig. 2 as it was found "equivalent" to Fig. 3c. In section 5 the complete source encoder was described and an effective encoding method for the transformed and quantized prediction error was proposed.

Appendix

Two-dimensional coding table

Explanations:

s : 1 bit for sign
- : don't care
+ : fixed length code
L : table entry 1 (run-length of zeros)
M : table entry 2 (magnitude of coefficient following a runlength of zeros)

No	M	L	code word	length	No	M	L	code word	length
1	-	-	11	2	43	2	10	0000011110s	11
2	1	0	010s	4	44	3	4	0000001000s	11
3	1	1	1000s	5	45	3	5	0000001001s	11
4	1	2	1001s	5	46	4	3	0000001010s	11
5	2	0	1010s	5	47	5	2	0000001011s	11
6	0	15	10110s	5	48	7	1	0000001100s	11
7	1	3	10111s	6	49	2	11	0000001101s	11
8	1	4	01100s	6	50	2	12	0000001110s	11
9	1	5	01101s	6	51	2	13	0000001111s	11
10	2	1	01110s	6	52	3	6	00000001000s	12
11	3	0	01111s	6	53	3	7	00000001001s	12
12	1	6	001000s	7	54	3	8	00000001010s	12
13	1	7	001001s	7	55	4	4	00000001011s	12
14	1	8	001010s	7	56	4	5	00000001100s	12
15	1	9	001011s	7	57	5	3	00000001101s	12
16	2	2	001100s	7	58	6	2	00000001110s	12
17	3	1	001101s	7	59	8	1	00000001111s	12
18	4	0	001110s	7	60	≥ 9	0	00001111s+++++++	16
19	5	0	001111s	7	61	0	1	00000000100000--	16
20	1	10	0001000s	8	62	0	2	00000000100001--	16
21	1	11	0001001s	8	63	0	3	00000000100010--	16
22	1	12	0001010s	8	64	0	4	00000000100011--	16
23	1	13	0001011s	8	65	0	5	00000000100100--	16
24	1	14	0001100s	8	66	0	6	00000000100101--	16
25	2	3	0001101s	8	67	0	7	00000000100110--	16
26	2	4	0001110s	8	68	0	8	00000000100111--	16
27	6	0	0001111s	8	69	0	9	00000000101000--	16
28	1	15	00001000s	9	70	0	10	00000000101001--	16
29	2	5	00001001s	9	71	0	11	00000000101010--	16
30	3	2	00001010s	9	72	0	12	00000000101011--	16
31	4	1	00001011s	9	73	0	13	00000000101100--	16
32	7	0	00001100s	9	74	0	14	00000000101101--	16
33	8	0	00001101s	9	75	2	14	00000000101110s-	16
34	2	6	00001110s	9	76	2	15	00000000101111s-	16
35	2	7	000001000s	10	77	3	9	00000000100000s-	16
36	2	8	000001001s	10	78	3	10	00000000110001s-	16
37	2	9	000001010s	10	79	4	6	00000000110010s-	16
38	3	3	000001011s	10	80	4	7	00000000110011s-	16
39	4	2	000001100s	10	81	4	8	00000000110100s-	16
40	5	1	000001101s	10	82	4	9	00000000110101s-	16
41	6	1	000001110s	10	83	5	4	00000000110110s-	16
42	0	0	0000011111	10	84	5	5	00000000110111s-	16
					85	6	3	00000000111000s-	16
					86	7	2	00000000111001s-	16
					87	8	2	00000000111010s-	16

References

1. H. G. Musmann, J. Klie, TV-transmission using a 64 kbit/s transmission rate, Proc. ICC, June 1979
2. S. Sabri, K. Cuffling, B. Prasada, Coding of video signals at 50 kbit/s using motion compensation techniques, Proc. IEEE Military Comm. Conf., Nov. 1983
3. S. Ericsson, Motion-compensated hybrid coding at 50 kbit/s, Proc. ICASSP, March 1985
4. H.G. Musmann, P. Pirsch, H.J. Grallert, Advances in picture coding, Proc. IEEE vol. 73, No. 4, April 1985
5. H. Yamaguchi, M. Wada, Encoding visual telephone video signals in 48 kbit/s, Proc. PCS 1986
6. J. Speidel, G. Weick, Low bit-rate codecs and an optimized network concept for visual communication services, Proc. ISSLS 1986
7. W.K. Pratt, Digital image processing, J. Wiley, 1978
8. W.H. Chen, W.K. Pratt, Scene adaptive coder, IEEE Trans. COM, Vol. 32, No. 3, March 1984
9. P. Vogel, An algebraic model for finite area convolution, AEÜ, Vol. 41, pp. 123-127, March 1987
10. Reports of the CCITT "Specialists Group on Coding for Visual Telephony", Study Group XV, 1986

EXHIBIT 11

Philips - LG
Akt. 4a O 84/06
Schrift. 15.09.2006
RAe Wildanger, Dr. Kehrwald

C C I T T

Document No. 2-E

Meeting of Chairmen of Study Groups

Geneva, 8-9 December 1983

Original : English

Question: 1.1.1

TITLE : CCITT PATENT POLICY

The question of how to deal with patented subjects in CCITT first came up in the early 1970's. In view of the experience of other standardization organisations (e.g. IEC, ISO) and the desirability to apply the same rules for all organisations, it was decided to adopt in principle the IEC/ISO rules for CCITT work.

These rules stipulate that Study Group members should inform the meeting if they know of any patent concerning a subject under study. If such a patent exists, the patent holder is required to make the patent available to members. The minimum requirements are, to grant licenses on a non-discriminatory basis and for reasonable fees. Such a statement by the patent holder is usually published as a meeting document. Members of the Study Group are then free to negociate a license agreement with the patent holder until the next Plenary Assembly when the draft Recommendation concerned is submitted by the Study Group for approval by the Plenary.

If any such license negociations fail, the Administration concerned may request the Study Group Chairman to withdraw this draft Recommendation from the Plenary Assembly.

These rules, although not printed in the CCITT Book, have worked satisfactorily over the years and the CCITT secretariat is not aware of a single case where the rules did not resolve the problem. Paul Hilgo UK/Codex

The advice of the CCITT Study Group Chairmen is sought as to whether the present procedure can be continued or whether they have encountered difficulties in their Study Groups.

UK: reservation

EXHIBIT 12

CCITT SG XV

Doc no # 170
November, 1986

Specialists Group on Coding
for Visual Telephony

Title: Coding of coefficients with a two-dimensional table

Source: FRG

1. Coding technique

In the reference model no 2 quantized and scanned transform coefficients are coded with a single VLC. This VLC is assigned to every coefficient (including zeros) separately, i.e. every coefficient produces a code word.

It is possible to save 3-4 bits per coded block compared with the reference model no 2 by using a two-dimensional coding table (Fig. 1) together with a diagonal scan. The "end of block" word is not shown in Fig. 1. The table uses the statistical property between the number of consecutive zeros (run-length) and the magnitude of the following nonzero coefficient. These parameters are coded in common, defining the two entries of the table.

Only the marked area in Fig. 1 is used, which reduces the number of code words.

Examples

18 zeros and a "3" are coded as
(i, j) = (15, 0) 16 zeros
(i, j) = (2, 3) 2 zeros and a "3"

7 zeros and a "6" are coded as
(i, j) = (6, 0) 7 zeros
(i, j) = (0,6) no zero and a "6"

Assuming 256 different levels for the quantized coefficients (excluding the DC-coefficient in intra-frame mode), a two-dimensional coding table needs 12 bits as an input (Fig. 2) A table with a variable length code is given in the appendix.

2. Conclusions

The obtained gains in coding efficiency using a two-dimensional coding table for non-fixed blocks are:
- 18 % for "checked jacket"
- 14 % for "split screen/Trevor White"

compared with the reference model no 2.

Only one scanning class with zig-zag scan is used.

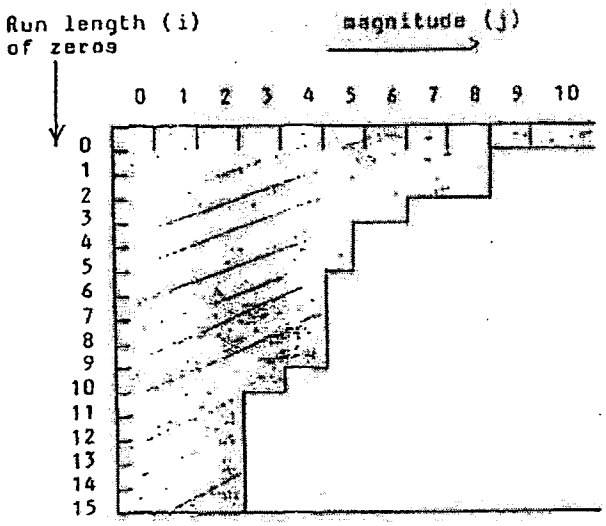

Fig. 1 2-dimensional VLC table

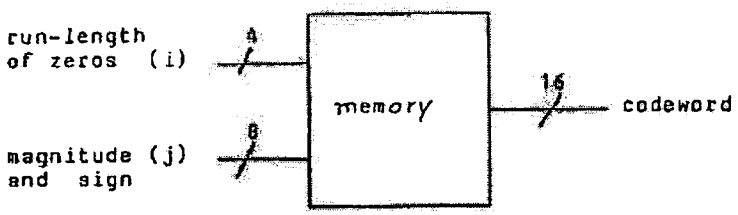

Fig. 2 Implementation of VLC table

Appendix

Two-dimensional coding table

Explanations:

s : 1 bit for sign
- : don't care
+ : fixed length code
i : table entry 1 (run-length of zeros)
j : table entry 2 (magnitude)

No	j	i	code word	length
1	-	-	11 (end of block)	2
2	1	0	010s	4
3	1	1	1000s	5
4	1	2	1001s	5
5	2	0	1010s	5
6	0	15	10110	5
7	1	3	10111s	6
8	1	4	01100s	6
9	1	5	01101s	6
10	2	1	01110s	6
11	3	0	01111s	6
12	1	6	001000s	7
13	1	7	001001s	7
14	1	8	001010s	7
15	1	9	001011s	7
16	2	2	001100s	7
17	3	1	001101s	7
18	4	0	001110s	7
19	5	0	001111s	7
20	1	10	0001000s	8
21	1	11	0001001s	8
22	1	12	0001010s	8
23	1	13	0001011s	8
24	1	14	0001100s	8
25	2	3	0001101s	8
26	2	4	0001110s	8
27	6	0	0001111s	8
28	1	15	00001000s	9
29	2	5	00001001s	9
30	3	2	00001010s	9
31	4	1	00001011s	9
32	7	0	00001100s	9
33	8	0	00001101s	9
34	2	6	00001110s	9
35	2	7	000001000s	10
36	2	8	000001001s	10
37	2	9	000001010s	10
38	3	3	000001011s	10
39	4	2	000001100s	10
40	5	1	000001101s	10
41	6	1	000001110s	10
42	0	0	0000011111	10

43	2	10	0000011110s	11
44	3	4	0000001000s	11
45	3	5	0000001001s	11
46	4	3	0000001010s	11
47	5	2	0000001011s	11
48	7	1	0000001100s	11
49	2	11	0000001101s	11
50	2	12	0000001110s	11
51	2	13	0000001111s	11
52	3	6	00000001000s	12
53	3	7	00000001001s	12
54	3	8	00000001010s	12
55	4	4	00000001011s	12
56	4	5	00000001100s	12
57	5	3	00000001101s	12
58	6	2	00000001110s	12
59	8	1	00000001111s	12
60	≥ 9	0	00001111s++++++++	16
61	0	1	000000000100000--	16
62	0	2	000000000100001--	16
63	0	3	000000000100010--	16
64	0	4	000000000100011--	16
65	0	5	000000000100100--	16
66	0	6	000000000100101--	16
67	0	7	000000000100110--	16
68	0	8	000000000100111--	16
69	0	9	000000000101000--	16
70	0	10	000000000101001--	16
71	0	11	000000000101010--	16
72	0	12	000000000101011--	16
73	0	13	000000000101100--	16
74	0	14	000000000101101--	16
75	2	14	000000000101110s-	16
76	2	15	000000000101111s-	16
77	3	9	000000000110000s-	16
78	3	10	000000000110001s-	16
79	4	6	000000000110010s-	16
80	4	7	000000000110011s-	16
81	4	8	000000000110100s-	16
82	4	9	000000000110101s-	16
83	5	4	000000000110110s-	16
84	5	5	000000000110111s-	16
85	6	3	000000000111000s-	16
86	7	2	000000000111001s-	16
87	8	2	000000000111010s-	16