PM 797217

THE UNITED STATES OF AMERICA

TO ALL TO WHOM THESE PRESENTS SHALL COME:

UNITED STATES DEPARTMENT OF COMMERCE
United States Patent and Trademark Office

February 16, 2006

THIS IS TO CERTIFY THAT ANNEXED IS A TRUE COPY FROM THE RECORDS OF THIS OFFICE OF THE FILE WRAPPER AND CONTENTS OF:

APPLICATION NUMBER: *07/096,177*
FILING DATE: *September 11, 1987*
PATENT NUMBER: *4,901,075*
ISSUE DATE: *February 13, 1990*

By Authority of the
Under Secretary of Commerce for Intellectual Property
and Director of the United States Patent and Trademark Office

M. K. CARTER
Certifying Officer

4901075

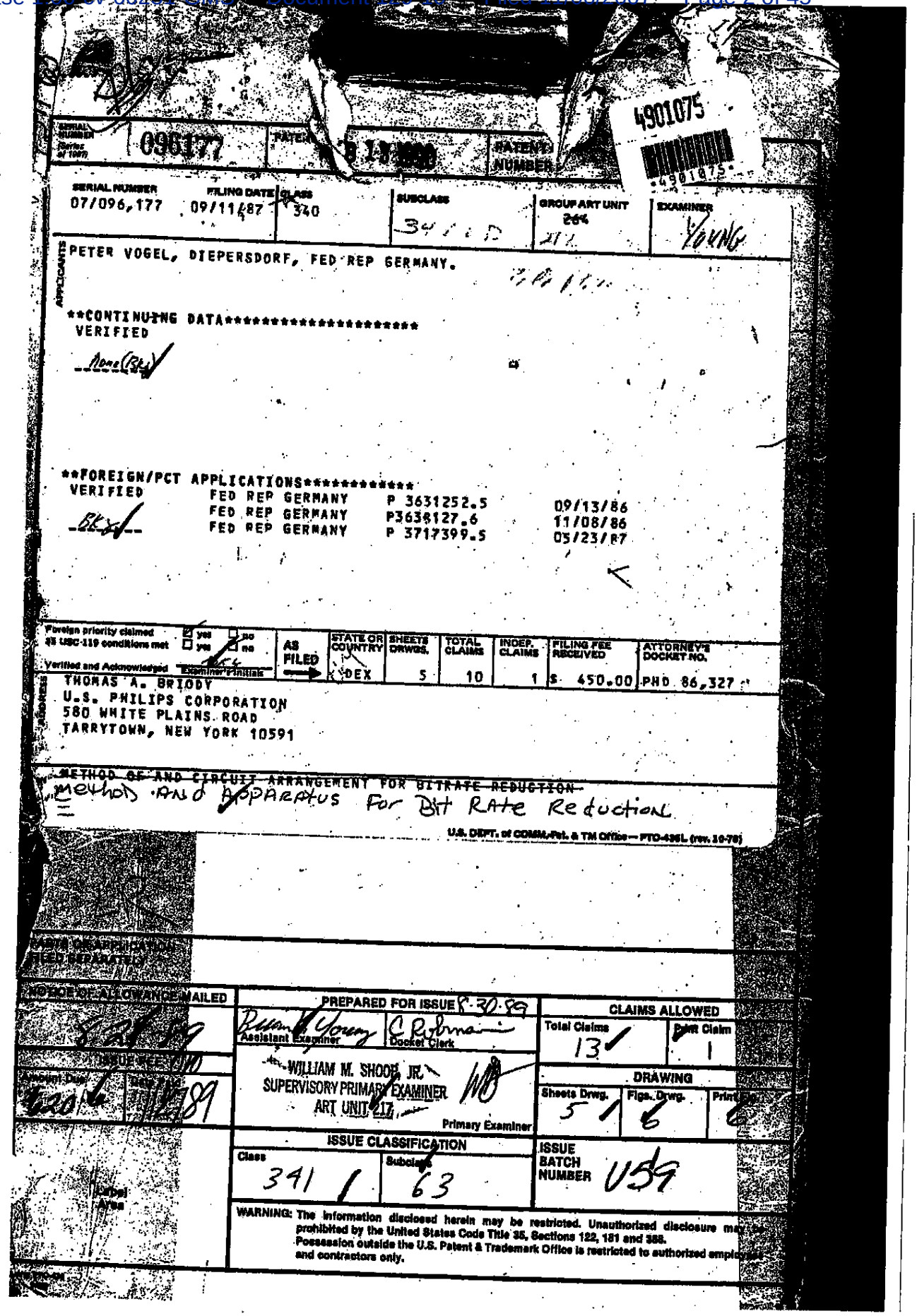

SERIAL NUMBER (Series of 1987)	096177	PATENT	8 13 1990	PATENT NUMBER

SERIAL NUMBER	FILING DATE	CLASS	SUBCLASS	GROUP ART UNIT	EXAMINER
07/096,177	09/11/87	340	341	264 217	YOUNG

APPLICANTS

PETER VOGEL, DIEPERSDORF, FED REP GERMANY.

CONTINUING DATA********
VERIFIED

None (BK)

FOREIGN/PCT APPLICATIONS********
VERIFIED

FED REP GERMANY	P 3631252.5	09/13/86
FED REP GERMANY	P3638127.6	11/08/86
FED REP GERMANY	P 3717399.5	05/23/87

BK

Foreign priority claimed ☑ yes ☐ no
35 USC-119 conditions met ☐ yes ☐ no
Verified and Acknowledged Examiner's Initials

AS FILED	STATE OR COUNTRY	SHEETS DRWGS.	TOTAL CLAIMS	INDEP. CLAIMS	FILING FEE RECEIVED	ATTORNEY'S DOCKET NO.
	DEX	5	10	1	$ 450.00	PHD 86,327

ADDRESS

THOMAS A. BRIODY
U.S. PHILIPS CORPORATION
580 WHITE PLAINS ROAD
TARRYTOWN, NEW YORK 10591

~~METHOD OF AND CIRCUIT ARRANGEMENT FOR BITRATE REDUCTION~~
Method and Apparatus For Bit Rate Reduction

U.S. DEPT. of COMM.-Pat. & TM Office — PTO-436L (rev. 10-78)

PARTS OF APPLICATION FILED SEPARATELY

NOTICE OF ALLOWANCE MAILED	PREPARED FOR ISSUE 8-30-89	CLAIMS ALLOWED
8-24-89	Assistant Examiner: William Young; Docket Clerk: C Robinson	Total Claims: 13; Print Claim: 1
ISSUE FEE: 010	WILLIAM M. SHOOP, JR. SUPERVISORY PRIMARY EXAMINER ART UNIT 217 — Primary Examiner	DRAWING
Amount Due: 620	Date Paid: 11/27/89	Sheets Drwg.: 5; Figs. Drwg.: 6; Print Fig.: 6
Label Area	ISSUE CLASSIFICATION: Class 341; Subclass 63	ISSUE BATCH NUMBER: U59

WARNING: The information disclosed herein may be restricted. Unauthorized disclosure may be prohibited by the United States Code Title 35, Sections 122, 181 and 368. Possession outside the U.S. Patent & Trademark Office is restricted to authorized employees and contractors only.

PATENT APPLICATION SERIAL NO. 096177

U.S. DEPARTMENT OF COMMERCE
PATENT AND TRADEMARK OFFICE
FEE RECORD SHEET

N 10220 09/18/87 096177 21-0450 010 101 340.00CH

PTO-1556
(5/87)

Case Docket No. PHD 86,327
Date: September 11, 1987

096177

SEP 11 1987 EXPRESS MAIL POST OFFICE TO ADDRESSEE

THE COMMISSIONER OF PATENTS AND TRADEMARKS
Washington, D.C. 20231

Enclosed for filing is the patent application of
Inventor(s): PETER VOGEL

For: METHOD OF AND CIRCUIT ARRANGEMENT FOR BITRATE REDUCTION

ENCLOSED ARE

[X] 5 sheets of [X] informal [ ] formal drawing.
[ ] An assignment of the invention to
[ ] A fully executed declaration.
[ ] An unsigned declaration.
[ ] A certified copy of application Serial No.
[X] Associate power of attorney.
[X] Preliminary Amendment.

FEE COMPUTATION

CLAIMS AS FILED				
FOR	Number Filed	Number Extra	Rate	Basic Fee - $340.00
Total Claims	10 - 20 =	0	x $12 =	
Independent Claims	1 - 3 =	0	x $34 =	
Multiple Dependent Claims, if any			$110 =	

TOTAL FILING FEE $340.00
ASSIGNMENT RECORDING FEE ...$

Please charge Deposit Account No. 21-0450 in the amount of $340.00. The Commissioner is hereby authorized to charge any additional fees which may be required, except the issue fee, or credit any overpayment to Account No. 21-0450.

[ ] Amend the specification by inserting before the first line the sentence: - This is a continuation-in-part of application Serial No. , filed

Gregory P. Gadson
Gregory P. Gadson, Reg. 31,254
Assoc. Attorney for Applicant(s)
(914) 332-0222 Ext. 232

CERTIFICATE OF MAILING

[X] Express Mail Mailing Label No. B88586195
Date of Deposit September 11, 1987

I hereby certify that this paper and fee is being deposited with the United States Postal Service "Express Mail Post Office to Addressee" service under 37 CFR 1.10 on the date indicated above and is addressed to the Commissioner of Patents and Trademarks, Washington, D.C. 20231.

Vera Kublanov
Typed Name

Vera Kublanov
Signature

Send correspondence and papers to: Thomas A. Briody, U.S. Philips Corporation, 580 White Plains Road, Tarrytown, New York 10591.

Rev. 10/85
Translet.frm

MAIL ROOM SEP 11 1987 PAT. & TRADEMARK OFF.

096177

Method of and circuit arrangement for bitrate reduction

The invention relates to a method of and a circuit arrangement for bitrate reduction. Bitrate reduction is carried out when coding a signal, which comprises a series of digital signal values and has a signal value A, occurring most frequently in runs.

An Article by Wen-Hsiung Chen and William K. Pratt (Chen, When-Hsiung and Pratt, William K.: Scene Adaptive Coder IEEE Transactions on Communications, vol. Com-32, No. 3, March 1984, pages 225-232) describes a coding process of video signals for the purpose of transmitting video pictures of satisfactory quality at a minimum possible bitrate. Coding is effected in several steps. First, equally large video picture sections which are represented by blocks of pixels are subjected to a Discrete Cosine Transform. In this transform process, a special two-dimensional Fourier transform is used. By the transform, a new block of values (coefficients) is obtained from the original block. This coefficient block has the property that a large part of its elements - thus a large part of the coefficients - is approximately 0 or exactly 0. A subsequent quantisation of the coefficients always renders the greater part of the elements 0 so that a subsequent Huffman coding would therefore already involve a considerable bitrate reduction. The authors of the above-mentioned Article achieve a further bitrate reduction in that the frequent occurrence of zero runs in the intermediate signal in which the coefficients are serially arranged is utilized by means of a Huffman coding.

It is known that in a Huffman coding in which the codewords have different lengths, statistic properties of the signal to be coded are utilized. In the present case this particularly implies that it is investigated at what frequency zero runs having lengths 1, 2, 3, etc. occur in the above-mentioned intermediate signal. The shortest Huffman codeword is then assigned to the run that occurs most frequently. The next larger codeword is assigned to the run that occurs less frequently, and so forth.

For coding the intermediate signal two Huffman code

PHLPSKD_00005037

tables are required according to the above-mentioned Article. A first table shows how the (quantised) coefficients different from 0 are to be coded. Only the coefficient values are coded because equally large coefficients also occur at the same frequency. The signs are transmitted in a separate bit. A second table shows how the run length is to be coded. In order that the codewords of one table can be distinguished from those of the other table during decoding, a separate codeword, the so-called run length prefix, is used for the identification of the coded run length.

It is an object of the invention to provide a coding method for a signal of the kind mentioned in the opening paragraph and comprising in a special case, an intermediate signal resulting from a picture coding operation, leading to a bit rate reduction which is larger than that hitherto known.

This object is achieved in that a Huffman codeword is assigned to each run of zeros having the length 0, 1, 2 etc., together with the signal value subsequent to the run or together with the signal value preceding the run.

Advantageous embodiments of the invention, particularly for exceptional cases of the signal characterised in the opening paragraph as well as a circuit arrangement for carrying out the method according to the invention, can be derived from the sub-claims.

The invention will now be described in greater detail by way of examples with reference to the accompanying drawings in which

Figure 1 is a table stating the occurrence of events,

Figure 2 is a further table elucidating the split-up of the events,

Figures 3 to Figure 5 show a coding table, and

Figure 6 shows the circuit diagram of arrangements for coding video signals according to the invention.

In the following embodiments explaining the invention the signal mentioned in the opening paragraph and occurring after coding blocks of video pictures elements. The signal values mentioned in the opening paragraph thus are the coefficients or the elements of the coefficients block, whilst the signal value is the value 0 because it occurs most frequently in runs in the intermediate signal.

As is evident from the invention, the occurrence of a zero

run and the coefficients subsequent to this run is considered as an event to be encoded. It is important that also when a coefficient different from 0 is not preceded by one or more 0 coefficients - thus the occurrence of a run length 0 - is treated as an event to be coded.

Each of these events occurs in the video signal with a characteristic frequency. As has been proved by, for example, measurements, small-value coefficients occur more frequently than those having a high value as the preceding coefficients run with the value 0 becomes longer.

Figure 1 shows the frequency distribution of the above-mentioned events in the case of a cosine-transformed and subsequently quantised video signal. Each field of the table represents an event characterized by the zero run length L and by the value B of the subsequent quantised coefficient. The values B proceed through the natural numbers without the zero and the length L proceeds through the natural numbers with the zero. In order that the table does not become arbitrarily large, all events with B larger than or equal to 9 are combined to an overall event. The same applies to L when larger than or equal to 9.

The numbers in the different fields indicate how often the associated event occurs in a quantised video signal with approximately 15000 signal values. The assignment of Huffman codewords is shown in the table: the series L=0, B=1 acquires the shortest codeword; this is followed by the series L=1, B=1 with the next longer codeword, and so forth.

If the assigned codewords instead of the frequencies are introduced in the event fields of the table, a two-dimensional coding table is obtained. It is not shown for the events according to Figure 1 because such coding tables can generally be set up by those skilled in the art. For the sake of completeness it is to be noted that a maximum number of 11 bits follows for the events in which L is larger than or equal to 9 or in which B is larger than or equal to 9 after the assigned Huffman codeword, which bits give the receiver accurate information about the value of L and the value of B, respectively.

An additional, but late, bitrate reduction of 12% is obtained when coding video signals in accordance with the above-mentioned two dimensional coding table as compared with the coding method described in

the opening paragraph.

This additional bit rate reduction is possible because, for example ~~the probability of the event in which three successive zeros with subsequent coefficient of the value 2 occur is different from the product of probability with which three successive zeros occur and the probability with which a coefficient of the value 2 occurs anyway~~.

The limitation of Figure 1 will now be considered in greater detail. As is evident from the above-mentioned embodiments the number of the events to be coded in accordance with Figure 1 is kept within efficient limits because all zero runs with an equally large subsequent value of a coefficient are considered as an event if the run length L is larger than eight.

Similarly, all zero runs of equal length are considered as an event if the subsequent value B of a coefficient is larger than eight.

As is shown in Figure 1, relatively rarely occurring events are concerned, and therefore they are coded with relatively long Huffman codewords. Since the receiver for decoding should know the exact zero run length or the exact value of a coefficient without any loss of information, an additional codeword is added to the Huffman codeword - as already indicated above - from which the exact length or the exact value or both can be derived.

A clearly defined state is encoded by the Huffman codeword and the additional information. Since the number of bits of such combinations is also dependent on the statistic properties of the signal, such combinations should also be present at the receiver and the decoder in order that the state which is based on these combinations can unambiguously be recognized at the receiver end.

The Huffman codewords defined in this sense may be up to 30 bits long. Since the processing of codewords which are at most 16 bits long does not require any special arrangements, but is possible, for example with a 16-bit microprocessor, given events are split up into sub-events - to improve the method described so far - such that codewords whose length is at most 16 bits are sufficient for coding all events and sub-events. This split-up will now be described in greater detail.

Firstly, an event to be coded consisting of an L = Lm zero run with subsequent coefficient of the value B = Bm is designated by

(Lm, Bm). In contrast to the foregoing, Bm = 0 is now also explicitly admitted. It is true that the two-dimensional diversity of events (Lm, Bm) occurring in practice is finite, because arbitrarily large values of coefficients do not occur, but it is very large. Consequently, the Huffman codewords to be used are correspondingly large as regards number and length. To reduce the overall number of the events to be coded the starting point is that, for example a run of 19 zeros with subsequent coefficient of the value 7 can be split up into sections, the first of which represents a run of 16 zeros, the second of which represents a run of 3 zeros and the third of which is a run without a zero and subsequent coefficient of the value 7. Each of these sections is now considered as a sub-event which is coded by a Huffman codeword. The length of each section is below a given value which can be predetermined and which will be further dealt with below.

This split-up is illustrated in Figure 2. In the horizontal direction all occurring values B - including the value 0 - of the coefficients are shown. In the vertical direction the length - also starting at 0 - of coefficient runs of the value 0 is shown. The "events Fields" shown symbolize the event (Lm, Bm) i.e. Lm zeros followed by a coefficient of the value Bm. The event (0, 3) for example, means that a coefficient of the value 3 is preceded by a run length 0 which means that there is no coefficient of the value 0 preceding. Isolated zeros in the signal are symbolized by the event (0, 0). The reference (3,Bm) refers inter alia to the event in which a coefficient of the value Bm is succeeded by three successive zeros. Since the value of zero is also admitted for Bm, the event (3, 0) means that there are four successive zeros.

Figure 2 shows a polygonal curve in a solid line dividing the series fields into two ranges. The left-hand range comprises the events which are referred to as being codable and the right-hand range shows the events which are referred to as non-codable. The maximum length for a section of signal values - corresponding to a codable event - is 16; the events (0, 15), (1, 15) and (2, 15) are involved. All other codable events correspond to signal sections which are shorter. The division into codable and non-codable events is not completely arbitrary; the most frequently occurring event should be associated with the codable ones. The crossed non-codable event (8, 7) is split up, for

example, into the events (0, 7) and (7, 0). There are various possibilities for the split-up; the simplest is the indicated "projection on the event axes".

The numbers in the event fields which are associated with the codable events signify the length - hence the number of bits - of the Huffman codewords with which the events are coded. The codewords also comprise the signs of the coefficients and possibly data about the magnitude of the value B; none of them is longer than 16 bits. In setting up the Huffman codewords it was assumed that coefficients having values of more than 136 do not occur.

Figures 3 to 5 show the exact structure of the Huffman codewords used. The first codeword 11 represents the coded signal value for characterizing a block end; at the transmission it succeeds the last codeword which is associated with a coefficient block. The first column of these figures states consecutive numbers, the second column states the values B of the coefficients and the third states the lengths L of the zero runs. The two latter data combined result in the "coordinates" of a codable event according to Figure 2. In the fourth column of Figs. 3 -5 the code words are shown bitwise. The bit s denotes the sign bit, the positions indicated by "-" are meaningless, and the positions indicated by "+" comprise the coded values of the coefficients in so far as they are larger than eight. The last column once more states the lenght of the Huffman codewords.

A possibility of further reducing the bitrate results from the fact that - as in the present embodiment - the signal to be coded is structured in accordance with blocks. As already indicated, the coefficients of a coefficient block are separated from those of the next block by an "end - of - block" signal. Also this "end - of - block" signal is converted into a codeword (compare Figure 3) whilst the sequence of m (codable) events of the type

(L1, B1)
(L2, B2) (1)
...
(Lm, Bm)

and into a sequence of assigned codewords. The number m of the events is dependent on the special values of the coefficients. If the overall coefficient block comprises, for example 63 zeros with subsequent

coefficients of the value 1, it is split up into only one event, namely (63, 1) or into several codable events according to Figure 2. As it is not known in advance into how many codable events a coefficient block is split up, the separate blocks must for this reason already be separated from one another by means of an "end - of - block" signal. At the receiver end the transmitted Huffman codewords are retransformed into events and these events are again converted into a sequence of coefficients. The receiver knows that, for example, 64 coefficients are associated with a coefficient block.

For further explanation and for the sake of simplicity it is assumed that 4 x 4 blocks are concerned, so that one block comprises a total of 16 coefficients. All data associated with a block are separated from the data of the subsequent block by an "end of block" sign. This sign and the corresponding codeword is excepted from the split-up of the signal to be coded in accordance with the events. If, for example the sequence of coefficients of a block in a decimal representation has the form of

XX 4005000050000001 XX, (2)

The block is split up according to scheme (1) into the following events.

(0, 4)
(2, 5)(4, 5) (3)
(6, 1)

In order that the coefficient sequence of a block can at any rate be split up into events in accordance with scheme (1) or (3) above, the coefficients are temporarily stored before they are further processed. The temporal sequence of the coefficients in scheme (2) and that of the events in schemes (1) and (3) corresponds to the sequence of their written registration (European writing direction assumed). The symbols XX in the embodiment according to scheme (2) symbolize the "end-of-block" signs of the previous block and the represented block.

The coefficients in scheme (2) which are different from 0 are all positive and are represented as integral multiples of the smallest unit, namely 1. As can be seen from scheme (3), the last event

is the event (6, 1). The Huffman codewords assigned to the events are not indicated.

Firstly, the weight of reception of the last event, namely (5, 1) of the block according to (2) is checked for the receiver. In the coding of pictures general experience has proved that the transmission of events with a run of more than five zeros become less worthwhile as the value of the subsequent coefficient is smaller. If in accordance with the rule based on experience, checked events for which L = 5 and B = 1 are not transmitted, the transmission of the last event does not take place. In that case the preceding series (4, 5) is checked in accordance with the same criterion. In the example according to (2) the check for this block is ended because the event (4, 5) and the assigned Huffman codeword must be transmitted.

After decoding the Huffman codewords at the receiver end all coefficients of the block according to scheme (2) can be recovered, but for those which are associated with non-transmitted events. However, since these are associated with the last coefficients of the block, the decoded coefficients at the receiver end are augmented with coefficients of the value 0 until the overall number of coefficients is 16.

Figure 6 shows a circuit arrangement realising a simple split-up of the sequence of coefficients in accordance with codable events. The supply of clock pulses and details of the logic operation of binary values are not shown because they are known to those skilled in the art. In the circuit arrangement according to Figure 6 events are coded which consist of a run of coefficients of the value zero and a subsequent coefficient. If the run length L in the signal to be coded exceeds a predetermined length Lmax, the associated event cannot be encoded and is split up into codable events. Due to the predetermined maximum length Lmax which is independent of the subsequent coefficient, no delays or intermediate storages of the coefficients are required.

The coefficients are serially applied from an input E via a multiple lead c to the address inputs of an addressable memory PROM and to a first input E1 of a comparator circuit K. The multiple lead c comprises as many wires as bits are required for the binary representation of a coefficient. A coding table is filed in the memory PROM.

The position of a counter Z is applied to a second input

E2 of the comparator K - via a multiple lead f. The multiple lead f is simultaneously connected to further address inputs of the memory PROM.

It is assumed that a coefficient which is different from zero is present at the input E1. In this case the comparator circuit K supplies a pulse from an output A2, which pulse is applied via a lead a to the reset input R of the counter Z and to the clock input C2 of a flipflop circuit FF. The counter is reset to the zero position with this pulse and the codeword which is present at the output of the memory PROM is bit-parallel taken over in the flipflop circuit FF. The codeword can be derived from the output A of the circuit arrangement according to Figure 6. The codewords present at output A are not the ultimate Huffman codewords because all of them have the same length. To convert codewords of the same length into codewords of unequal length, and conversely - the latter conversion is required at the receiver end - reference is made to patent applications DE 35 10 902, DE 35 10 901 and DE 36 32 682.

If a zero is present at the input E1, the comparator circuit K supplies a counting pulse from a further output A1 and applies it to the clock input C1 of the counter Z which increases it count by one unit. The comparator circuit K continuously compares the actual counting with the value Lmax which is stored in one of its memories not shown. If the count reaches the value Lmax, the supply of a further counting pulse does not take place, instead the reset or transfer pulse is supplied from the output A2.

The complete coefficients - thus also their signs - are processed in the circuit arrangement according to Figure 6. In a modification the signs of the coefficients are applied via a separate wire to the output A of the circuit arrangement and to except them from a comparison by the comparator circuit K and from determining the codewords by the programmable memory PROM.

cm what is claimed is:

12

1. A method of bitrate reduction when coding a signal comprising a sequence of digitally represented values and comprising a signal value A occurring most frequently in runs, characterized in that a Huffman codeword is assigned to each run length 0, 1, 2 etc. of signal values A together with the signal value subsequent to the run or together with the signal value preceding the run.

2. A method as claimed in Claim 1, characterized in that the same Huffman codeword is assigned to each run of signal values A together with the signal value subsequent to the run or together with the signal value preceding the run, if the run exceeds a predetermined length and/or if the subsequent or preceding signal value exceeds a predetermined value.

3. A method as claimed in Claim 1 or 2, characterized in that if a run of signal values A together with the preceding or subsequent signal value exceeds a predetermined length, said overall run is split up into sections in such a manner that the length of each section is below a predetermined value, and in that a Huffman codeword is assigned to each section.

4. A method as claimed in Claim 1, 2 or 3, characterized in that the signal comprises a sequence of coefficients which results after blockwise transform of pixels of a video signal with subsequent quantization and in that the signal value A is the zero value.

5. A method as claimed in Claim 4, characterized in that the advantages and drawbacks of non-transmission of the last Huffman codeword of a block are checked in a signal having the structure of equally long blocks, and in that the case of the advantages prevailing the Huffman codeword is not transmitted and subsequently the same check with the preceding Huffman codeword as last Huffman codeword is repeated.

6. A method as claimed in Claim 5, characterized in that a checked Huffman codeword is not transmitted if the length of the associated run of signal values A exceeds a barrier which is dependent on the magnitude of the subsequent signal value.

A method as claimed in Claim 5, characterized in that the signal comprises a sequence of coefficients which results after a blockwise transform of pixels of a video signal with subsequent quantisation ~~and in that the signal value A is the zero value~~, and in that a checked Huffman codeword is not transmitted if the length of the associated zero run is larger than five and if the magnitude of the subsequent ~~signal value~~ non-zero-coefficient has the smallest possible value different from zero.

~~8. A method as claimed in Claim 4 or 7, characterized in that the Hufmann codeword is independent of the sign of that coefficient which succeeds or precedes the zero run and in that the sign is coded by a separate bit.~~

9. A circuit arrangement for performing the method as claimed in ~~any one of Claims 1 to 8~~ Claim 1, characterized in that the binary coded coefficients are applied with predetermined delays to the address inputs of a memory (PROM) and to a first input (E1) of a comparator circuit (K), in that a counter (Z) is provided whose count is applied to further address inputs of the memory (PROM) and to a second input (E2) of the comparator circuit (K), in that the comparator circuit (K) supplies a counting pulse to the counter (Z) from a first output (A1) if a zero value coefficient is present at the first input (E1) and if the count has not exceeded a value stored in a memory of the comparator circuit (K) supplies a pulse from a second output (A2) if the conditions for the supply of a counting pulse are not fulfilled, and in that the counter (Z) is reset by means of the pulse at the second output (A2) of the comparator circuit (K), and in that the codeword present at the outputs of the memory (PROM) is transferred to an intermediate memory (FF).

~~10.~~ A circuit arrangement as claimed in Claim ~~9~~ 1, characterized in that only the values of the coefficients are applied to the address inputs of the memory (PROM) and the comparator circuit (K) and in that the sign bits of the coefficients are supplied through a separate wire to the output (A) of the circuit arrangement.

Abstract:

Method of and circuit arrangement for bitrate reduction.

The method described for bitrate reduction is particularly intended for video signals in which so-called coefficients blocks occur. The coefficients have the property that a large part of them assumes the value 0. For this reason a zero run together with the subsequent coefficient is considered as an event, provided that the zero run length remains below a maximum value. If the maximum value is reached, this maximum zero run with its subsequent coefficient is considered as a event, and the coefficient then following are considered as a further event. A Huffman codeword is assigned to each event for the purpose of transmission.


MAIL ROOM
SEP
11
1987
PAT. & TRADEMARK OFF.

Print Of Drawing
As Original Filed

'87 09/08 09:27

096177
83

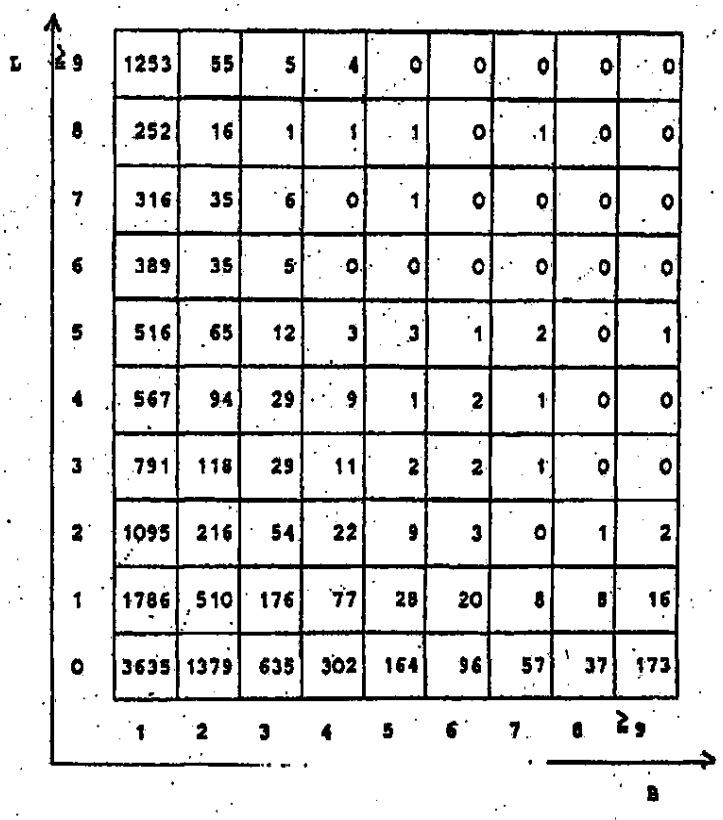

L \ B	1	2	3	4	5	6	7	8	≥9
≥9	1253	55	5	4	0	0	0	0	0
8	252	16	1	1	1	0	1	0	0
7	316	35	6	0	1	0	0	0	0
6	389	35	5	0	0	0	0	0	0
5	516	65	12	3	3	1	2	0	1
4	567	94	29	9	1	2	1	0	0
3	791	118	29	11	2	2	1	0	0
2	1095	216	54	22	9	3	0	1	2
1	1786	510	176	77	28	20	8	8	16
0	3635	1379	635	302	164	96	57	37	173

FIG. 1

1-V-PHD 86-327 C

Print Of Drawing
As Original Filed

096177

'87 09/08 09:27

84

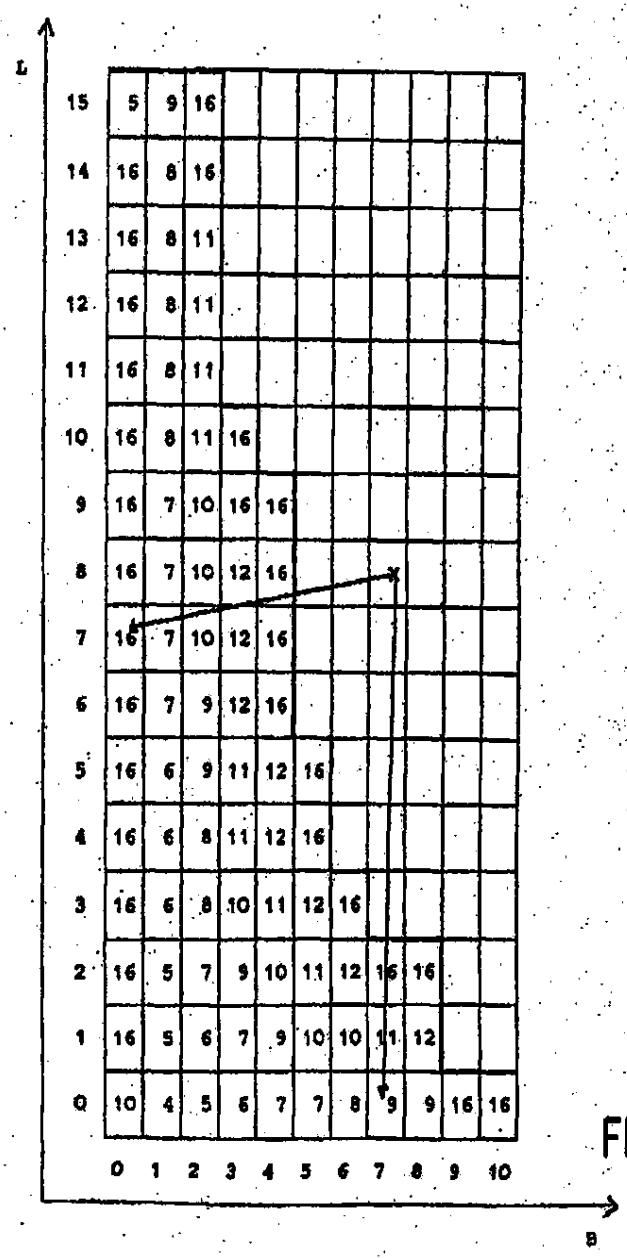

FIG. 2

2-V-PHD 86-327C

Print Of Drawing
As Original Filed

'87 09/08 09:27

096177
85

3/5

Nr.	B	L	code word	length
1	-	-	11 (end of block)	2
2	1	0	010s	4
3	1	1	1000s	5
4	1	2	1001s	5
5	2	0	1010s	5
6	0	15	10110	5
7	1	3	10111s	6
8	1	4	01100s	6
9	1	5	01101s	6
10	2	1	01110s	6
11	3	0	01111s	6
12	1	6	001000s	7
13	1	7	001001s	7
14	1	8	001010s	7
15	1	9	001011s	7
16	2	2	001100s	7
17	3	1	001101s	7
18	4	0	001110s	7
19	5	0	001111s	7
20	1	10	0001000s	8
21	1	11	0001001s	8
22	1	12	0001010s	8
23	1	13	0001011s	8
24	1	14	0001100s	8
25	2	3	0001101s	8
26	2	4	0001110s	8
27	6	0	0001111s	8
28	1	15	00001000s	9
29	2	5	00001001s	9
30	3	2	00001010s	9
31	4	1	00001011s	9
32	7	0	00001100s	9
33	8	0	00001101s	9

FIG. 3

3-V-PHD 86-327C

Print Of Drawing
As Original Filed

Nr.	B	L	code word	length
34	2	6	00001110s	9
35	2	7	000001000s	10
36	2	8	000001001s	10
37	2	9	000001010s	10
38	3	3	000001011s	10
39	4	2	000001100s	10
40	5	1	000001101s	10
41	6	1	000001110s	10
42	0	0	0000011111	10
43	2	10	0000011110s	11
44	3	4	0000001000s	11
45	3	5	0000001001s	11
46	4	3	0000001010s	11
47	5	2	0000001011s	11
48	7	1	0000001100s	11
49	2	11	0000001101s	11
50	2	12	0000001110s	11
51	2	13	0000001111s	11
52	3	6	00000001000s	12
53	3	7	00000001001s	12
54	3	8	00000001010s	12
55	4	4	00000001011s	12
56	4	5	00000001100s	12
57	5	3	00000001101s	12
58	6	2	00000001110s	12
59	8	1	00000001111s	12
60	9	0	00001111s++++++++	16
61	0	1	00000000100000--	16
62	0	2	00000000100001--	16
63	0	3	00000000100010--	16
64	0	4	00000000100011--	16
65	0	5	00000000100100--	16

FIG. 4

Print Of Drawing
As Original Filed

096177

'87 09/08 09:28 07

5/5

Nr.	B	L	code word	length
66	0	6	00000000100101--	16
67	0	7	00000000100110--	16
68	0	8	00000000100111--	16
69	0	9	00000000101000--	16
70	0	10	00000000101001--	16
71	0	11	00000000101010--	16
72	0	12	00000000101011--	16
73	0	13	00000000101100--	16
74	0	14	00000000101101--	16
75	2	14	00000000101110s-	16
76	2	15	00000000101111s-	16
77	3	9	00000000110000s-	16
78	3	10	00000000110001s-	16
79	4	6	00000000110010s-	16
80	4	7	00000000110011s-	16
81	4	8	00000000110100s-	16
82	4	9	00000000110101s-	16
83	5	4	00000000110110s-	16
84	5	5	00000000110111s-	16
85	6	3	00000000111000s-	16
86	7	2	00000000111001s-	16
87	8	2	00000000111010s-	16

FIG. 5

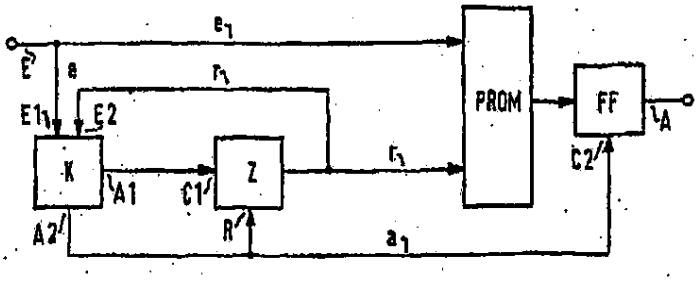

FIG. 6

5-V-PHD 86-327C

UNITED STATES DEPARTMENT OF COMMERCE
Patent and Trademark Office
Address: COMMISSIONER OF PATENTS AND TRADEMARKS
Washington, D.C. 20231

SERIAL NUMBER	FILING DATE	FIRST NAMED APPLICANT	ATTY. DOCKET NO.
07/096,177	09/11/87	VOGEL P	PHD 86,327

PHD 86,327

#2

THOMAS A. BRIODY
U.S. PHILIPS CORPORATION
580 WHITE PLAINS ROAD
TARRYTOWN, NEW YORK 10591

000

DATE MAILED: 10/13/87

NOTICE TO FILE MISSING PARTS OF APPLICATION— FILING DATE GRANTED

A filing date has been granted to this application. However, the following parts are missing.

If all missing parts are filed within the period set below, the total amount owed by applicant as a ☑ large entity, ☐ small entity (verified statement filed), is $ 110.00

1. ☐ The statutory basic filing fee is: ☐ missing. ☐ insufficient. Applicant as a ☐ large entity, ☐ small entity, must submit $ _____ to complete the basic filing fee and MUST ALSO SUBMIT THE SURCHARGE AS INDICATED BELOW.
2. ☐ Additional claim fees of $ _____ as a ☐ large entity, ☐ small entity, including any required multiple dependent claim fee, are required. Applicant must submit the additional claim fees or cancel the additional claims for which fees are due. NO SURCHARGE IS REQUIRED FOR THIS ITEM.
3. ☑ The oath or declaration:
   ☑ is missing.
   ☐ does not cover items omitted at the time of execution.

   An oath or declaration in compliance with 37 CFR 1.63, identifying the application by the above Serial Number and Filing Date is required. A SURCHARGE MUST ALSO BE SUBMITTED AS INDICATED BELOW.
4. ☐ The oath or declaration does not identify the application to which it applies. An oath or declaration in compliance with 37 CFR 1.63 identifying the application by the above Serial Number and Filing Date is required. A SURCHARGE MUST ALSO BE SUBMITTED AS INDICATED BELOW.
5. ☐ The signature to the oath or declaration is: ☐ missing; ☐ a reproduction; ☐ by a person other than the inventor or a person qualified under 37 CFR 1.42, 1.43, or 1.47. A properly signed oath or declaration in compliance with 37 CFR 1.63, identifying the application by the above Serial Number and Filing Date is required. A SURCHARGE MUST ALSO BE SUBMITTED AS INDICATED BELOW.
6. ☐ The signature of the following joint inventor(s) is missing from the oath or declaration: _____ Applicant(s) should provide, if possible an oath or declaration signed by the omitted inventor(s), identifying this application by the above Serial Number and Filing Date. A SURCHARGE MUST ALSO BE SUBMITTED AS INDICATED BELOW.
7. ☐ The application was filed in a language other than English. Applicant must file a verified English translation of the application and a fee of $26.00 under 37 CFR 1.17(k), unless this fee has already been paid NO SURCHARGE UNDER 37 CFR 1.16(e) IS REQUIRED FOR THIS ITEM.
8. ☐ A $20.00 processing fee is required for returned checks. (37 CFR 1.21(m)).
9. ☐ Your filing receipt was mailed in error because check was returned.
10. ☑ Other Surcharge of $110.00 required

A Serial Number and Filing Date have been assigned to this application. However, to avoid abandonment under 37 CFR 1.53(d), the missing parts and fees identified above in items 1 and 3-6 must be timely provided ALONG WITH THE PAYMENT OF A SURCHARGE OF $110.00 for large entities or $55.00 for small entities who have filed a verified statement claiming such status. The surcharge is set forth in 37 CFR 1.16(e). Applicant is given ONE MONTH FROM THE DATE OF THIS LETTER, OR TWO MONTHS FROM THE FILING DATE of this application, WHICHEVER IS LATER, within which to file all missing parts and pay any fees. Extensions of time may be obtained by filing a petition accompanied by the extension fee under the provisions of 37 CFR 1.136(a).

Direct the response to, and any questions about, this notice to the undersigned, Attention: Application Branch.

A copy of this notice MUST be returned with response.

Brenda A. Chea
For: Manager, Application Branch
(703) 557-2254

For Office Use Only	
☐ 102	☐ 202
☐ 103	☐ 203
☐ 104	☐ 204
☑ 105	☐ 205

FORM PTO-1533 (REV. 1-88) OFFICE COPY

105—110.00

MAIL ROOM OCT 26 1987

UNITED STATES DEPARTMENT OF COMMERCE
Patent and Trademark Office
Address: COMMISSIONER OF PATENTS AND TRADEMARKS
Washington, D.C. 20231

#3

SERIAL NUMBER	FILING DATE	FIRST NAMED APPLICANT	ATTY. DOCKET NO.
07/096,177	09/11/87	VOGEL P	PHD 86,327

PHD 86,327

THOMAS A. BRIODY
U.S. PHILIPS CORPORATION
580 WHITE PLAINS ROAD
TARRYTOWN, NEW YORK 10591

000

DATE MAILED: 10/13/87

NOTICE TO FILE MISSING PARTS OF APPLICATION—FILING DATE GRANTED

A filing date has been granted to this application. However, the following parts are missing.

If all missing parts are filed within the period set below, the total amount owed by applicant as a ☑ large entity, ☐ small entity (verified statement filed), is $ 110.00

1. ☐ The statutory basic filing fee is: ☐ missing. ☐ insufficient. Applicant as a ☐ large entity, ☐ small entity, must submit $ _____ to complete the basic filing fee and MUST ALSO SUBMIT THE SURCHARGE AS INDICATED BELOW.
2. ☐ Additional claim fees of $ _____ as a ☐ large entity, ☐ small entity, including any required multiple dependent claim fee, are required. Applicant must submit the additional claim fees or cancel the additional claims for which fees are due. NO SURCHARGE IS REQUIRED FOR THIS ITEM.
3. ☑ The oath or declaration:
   ☑ is missing.
   ☐ does not cover items omitted at the time of execution.

   An oath or declaration in compliance with 37 CFR 1.63, identifying the application by the above Serial Number and Filing Date is required. A SURCHARGE MUST ALSO BE SUBMITTED AS INDICATED BELOW.
4. ☐ The oath or declaration does not identify the application to which it applies. An oath or declaration in compliance with 37 CFR 1.63 identifying the application by the above Serial Number and Filing Date is required. A SURCHARGE MUST ALSO BE SUBMITTED AS INDICATED BELOW.
5. ☐ The signature to the oath or declaration is: ☐ missing; ☐ a reproduction; ☐ by a person other than the inventor or a person qualified under 37 CFR 1.42, 1.43, or 1.47. A properly signed oath or declaration in compliance with 37 CFR 1.63, identifying the application by the above Serial Number and Filing Date is required. A SURCHARGE MUST ALSO BE SUBMITTED AS INDICATED BELOW.
6. ☐ The signature of the following joint inventor(s) is missing from the oath or declaration: _____. Applicant(s) should provide, if possible an oath or declaration signed by the omitted inventor(s), identifying this application by the above Serial Number and Filing Date. A SURCHARGE MUST ALSO BE SUBMITTED AS INDICATED BELOW.
7. ☐ The application was filed in a language other than English. Applicant must file a verified English translation of the application and a fee of $26.00 under 37 CFR 1.17(k), unless this fee has already been paid NO SURCHARGE UNDER 37 CFR 1.16(e) IS REQUIRED FOR THIS ITEM.
8. ☐ A $20.00 processing fee is required for returned checks. (37 CFR 1.21(m)).
9. ☐ Your filing receipt was mailed in error because check was returned.
10. ☑ Other: Surcharge of $110.00 required

A Serial Number and Filing Date have been assigned to this application. However, to avoid abandonment under 37 CFR 1.53(d), the missing parts and fees identified above in items 1 and 3-6 must be timely provided ALONG WITH THE PAYMENT OF A SURCHARGE OF $110.00 for large entities or $55.00 for small entities who have filed a verified statement claiming such status. The surcharge is set forth in 37 CFR 1.16(e). Applicant is given ONE MONTH FROM THE DATE OF THIS LETTER, OR TWO MONTHS FROM THE FILING DATE of this application, WHICHEVER IS LATER, within which to file all missing parts and pay any fees. Extensions of time may be obtained by filing a petition accompanied by the extension fee under the provisions of 37 CFR 1.136(a).

Direct the response to, and any questions about, this notice to the undersigned, Attention: Application Branch.

S 20114 10/16/87 096177 21 0150 020 105 110.00CH

A copy of this notice MUST be returned with response.

Brenda A. Chen

For: Manager, Application Branch
(703) 557-3254

FORM PTO-1832 (REV. 7-87)

For Office Use Only	
☐ 102	☐ 202
☐ 103	☐ 203
☐ 104	☐ 204
☑ 105	☐ 205

COPY TO BE RETURNED WITH RESPONSE

MAIL F
OCT
26
1987
PAT. & TRADE

#5

Sole / Joint

DECLARATION AND POWER OF ATTORNEY

Attorney's Docket No.
PHD.86-327C

As a below named inventor, I hereby declare that:
My residence, post office address and citizenship are as stated below next to my name.
I believe I am the original, first and sole inventor (if only one name is listed below) or an original, first and joint inventor (if plural names are listed below) of the subject matter which is claimed and for which a patent is sought on the invention entitled

"Method of and circuit arrangement for bitrate reduction."

the specification of which (check one)

☐ is attached hereto.

☒ was filed on September 11, 1987 as Application Serial No. 096,177 and was amended on _____ (if applicable).

I hereby state that I have reviewed and understand the contents of the above-identified specification, including the claims, as amended by any amendment referred to above.

I acknowledge the duty to disclose information which is material to the examination of this application in accordance with Title 37, Code of Federal Regulations, §1.56 (a).

I hereby claim foreign priority benefits under Title 35, United States Code, §119 of any foreign application(s) for patent or inventor's certificate listed below and have also identified below any foreign application for patent or inventor's certificate having a filing date before that of the application on which priority is claimed:

PRIOR FOREIGN APPLICATION(S)

COUNTRY	APPLICATION NUMBER	DATE OF FILING (day, month, year)	PRIORITY Claimed Under 35 U.S.C. 119
West-Germany	P 3631252.5	13-9-1986	YES X NO ___
West-Germany	P 3638127.6	8-11-1986	YES X NO ___
~~West-Germany~~	~~P 3717399.5~~	~~23-5-1987~~	~~X~~

I hereby claim the benefit under Title 35, United States Code, §120 of any United States application(s) listed below and, insofar as the subject matter of each of the claims of this application is not disclosed in the prior United States application in the manner provided by the first paragraph of Title 35 United States Code, §112, I acknowledge the duty to disclose material information as defined in Title 37, Code of Federal Regulations, §1.56(a) which occurred between the filing date of the prior application and the national or PCT international filing date of this application:

PRIOR UNITED STATES APPLICATION(S)

APPLICATION SERIAL NUMBER	FILING DATE	STATUS (PATENTED, PENDING, ABANDONED)

I hereby declare that all statements made herein of my own knowledge are true and that all statements made on information and belief are believed to be true; and further that these statements were made with the knowledge that willful false statements and the like so made are punishable by fine or imprisonment, or both, under Section 1001 of Title 18 of the United States Code and that such willful false statements may jeopardize the validity of the application or any patent issued thereon.

POWER OF ATTORNEY: As a named inventor, I hereby appoint the following attorney(s) and/or agent(s) to prosecute this application and transact all business in the Patent and Trademark Office connected therewith. (list name and registration number)

Thomas A. Briody, Reg. No. 18,160
Jack Oisher, Reg. No. 17,317

SEND CORRESPONDENCE TO:	DIRECT TELEPHONE CALLS TO (name and telephone No.)
Corporate Patent Counsel U.S. Philips Corporation 580 White Plains Road Tarrytown, New York 10591	(914) 332-0222

Dated: October 19, 1987		Inventor's Signature: Peter Vogel		
FULL NAME OF INVENTOR	Last Name: VOGEL	First Name: Peter	Middle Name:	
RESIDENCE & CITIZENSHIP	City: DIEPERSDORF	State or Foreign Country: West-Germany	Country of Citizenship: West-Germany	
POST OFFICE ADDRESS	Street & No.: Wöhrletstr. 7a	City: 8566 DIEPERSDORF	State or Country: West-Germany	Zip Code:
Dated:		Inventor's Signature:		
FULL NAME OF INVENTOR	Last Name	First Name	Middle Name	
RESIDENCE & CITIZENSHIP	City	State or Foreign Country	Country of Citizenship	
POST OFFICE ADDRESS	Street & No.	City	State or Country	Zip Code

Claim 8, line 1, delete "or 7";

Claim 9, line 2, change "any one of Claims 1 to 8" to --Claim 1--;

Claim 10, line 5, change "wise" to --wire--;

REMARKS

This amendment is being submitted in order to place the application in proper U.S. form. An early allowance is requested.

Respectfully submitted,

PETER VOGEL

By Gregory P. Gadson
Gregory P. Gadson, Reg. 31,254
Assoc. Attorney for Applicant
(914) 332-0222, Ext. 232
September 11, 1987

096,177
#35



IN THE UNITED STATES PATENT AND TRADEMARK OFFICE

In re Application of
PETER VOGEL

Atty. Docket
PHD 86-327

Serial No.

Group Art Unit

Filed: Concurrently

Examiner

Title: METHOD OF AND CIRCUIT ARRANGEMENT FOR BITRATE REDUCTION

Honorable Commissioner of Patents and Trademarks
Washington, D.C. 20231

APPOINTMENT OF ASSOCIATES

Sir:

The undersigned Attorney of Record hereby revokes all prior appointments (if any) of Associate Attorney(s) or Agent(s) in the above-captioned case and appoints:

William J. Streeter (Registration No. 24,447)

Gregory P. Gadson (Registration No. 31,254) and

(Registration No.)

c/o U.S. PHILIPS CORPORATION, Intellectual Property Department, 580 White Plains Road, Tarrytown, New York 10591, his Associate Attorney(s)/Agent(s) with all the usual powers to prosecute the above-identified application and any division or continuation thereof, to make alterations and amendments therein, and to transact all business in the Patent and Trademark Office connected therewith.

ALL CORRESPONDENCE CONCERNING THIS APPLICATION AND THE LETTERS PATENT WHEN GRANTED SHOULD BE ADDRESSED TO THE UNDERSIGNED ATTORNEY OF RECORD.

Respectfully,

Thomas A. Briody

Thomas A. Briody, Reg. 19,160
Attorney of Record

Dated at Tarrytown, New York
this 9th day of September, 1987.

Appasoc.frm

MAIL ROOM SEP 11 1987 PAT. & TRADEMARK OFFICE

IN THE UNITED STATES PATENT AND TRADEMARK OFFICE

In re Application of Atty. Docket

PHD 86-327

PETER VOGEL

Filed: Concurrently

METHOD OF AND CIRCUIT ARRANGEMENT FOR BITRATE REDUCTION

Honorable Commissioner of Patents and Trademarks
Washington, D.C. 20231

PRELIMINARY AMENDMENT

Sir:

Prior to examination, please amend the above-identified application as follows:

IN THE TITLE

Page 1, above line 1, delete in its entirety and insert

--METHOD AND APPARATUS FOR BIT RATE REDUCTION--;

IN THE SPECIFICATION

Page 1, above line 1, insert as a centered heading

--Background of the Invention--;

line 2, change "bitrate" to --bit rate--; change "Bitrate" to --Bit rate--;

line 10, change "bitrate" to --bit rate--; after "First" insert --,-- (comma);

line 12, after "process" insert --,-- (comma);

line 13, after "transform" insert --,-- (comma);

line 18, change "o" to --0--;

LDCI10050 -1-

Page 1, line 17, change "quantisation" to --quantization--;
line 19, change "bitrate" to --bit rate--;
line 20, change "bitrate" to --bit rate--;
line 25, change "lenghts" to --lengths--;
line 26, after "case" insert --,-- (comma);
line 27, change "lenghts" to --lengths--;

Page 2, between lines 9 and 10, insert as a centered heading
--Summary of the Invention--;
line 12, after "case" insert --,-- (comma);
line 22, after "invention" insert --,-- (comma);
between lines 22 and 23, insert as a centered heading
--Brief Description of the Drawing--;
line 28, change "Figure" to --Figures--; after "table" insert --,-- (comma);
between lines 30 and 31, insert as a centered heading
--Detailed Description of the Invention--;
line 35, change "whilst" to --while--;
line 37, after "invention" insert --,-- (comma);

Page 3, line 6, after "example" insert --,-- (comma);
line 12, change "quantised" to --quantized--;
line 15, change "lenght" to --length--;
line 21, change "quantised" to --quantized--;
line 26, change "frequenties" to --frequencies--;
line 35, change "bitrate" to --bit rate--;

Page 4, line 2, change "bitrate" to --bit rate--;
line 13, after "Similarly" insert --,-- (comma);
line 15, after "1" insert --,-- (comma);
line 16, after "concerned" insert --,-- (comma);

LDC110050 -2-

Page 4, line 31, delete "up";

line 36, after "Firstly" insert --,-- (comma);

Page 5, line 1, after "foregoing" insert --,-- (comma);

line 4, after "Consequently" insert --,-- (comma);

line 8, after "sections" insert --,-- (comma);

line 12, change "lenght" to --length--;

line 20, after "example" insert --,-- (comma);

line 21, change "lenght" to --length--;

line 24, change "inter alia" to --inter alia,--;

line 37, change "split-up" to --split--;

Page 6, line 1, after "example" insert --,-- (comma);

line 20, after "meaningless" insert --,-- (comma);

line 23, change "lenght" to --length--;

line 24, change "bitrate" to --bit rate--;

line 29, change "whilst" to --while--;

Page 7, line 4, delete "up";

line 8, after "example" insert --,-- (comma);

line 10, after "simplicity" insert --,-- (comma);

line 28, delete "up";

line 33, change "symbolise" to --symbolize--;

Page 8, line 3, after "Firstly" insert --,-- (comma);

line 28, change "split-up" to --split--;

Page 9, line 22, change ", instead" to --. Instead,--;

line 26, change "eia" to --via--;

line 27, change "wise" to --wire--; change "except" to --accept--;

IN THE ABSTRACT

Page 12, above line 1, delete in its entirety and insert as a centered heading --Abstract of the Disclosure--;

line 1, change "bitrate" to --bit rate--;

line 8, after "event" insert --,-- (comma); change "coefficient" to --coefficients--;

IN THE CLAIMS

Please amend the claims as follows:

Page 10, above Claim 1, insert --What is claimed is:--;

Claim 1, line 1, change "bitrate" to --bit rate--;

line 2, change "consisting of" to --comprising--;

Claim 2, line 5, change "lenght and/or" to --length or--;

Claim 3, line 1, delete "or 2";

line 4, delete "up";

line 5, after "value" insert --,-- (comma);

Claim 4, line 1, delete "2 or 3,";

line 4, change "quantisation" to --quantization,--;

Claim 7, line 6, change "it" to --if--; after "magnitude" insert --of--;

UNITED STATES DEPARTMENT OF COMMERCE
Patent and Trademark Office
Address: COMMISSIONER OF PATENTS AND TRADEMARKS
Washington, D.C. 20231

SERIAL NUMBER	FILING DATE	FIRST NAMED APPLICANT	ATTORNEY DOCKET NO.
07/096,177	09/11/87	VOGEL P	PHD 86-327

THOMAS A. BRIODY
U.S. PHILIPS CORPORATION
580 WHITE PLAINS ROAD
TARRYTOWN, NEW YORK 10591

EXAMINER	
YOUNG, B	
ART UNIT	PAPER NUMBER
217	5

DATE MAILED: 09/20/88

This is a communication from the examiner in charge of your application.

COMMISSIONER OF PATENTS AND TRADEMARKS

☑ This application has been examined ☐ Responsive to communication filed on _____ ☐ This action is made final.

A shortened statutory period for response to this action is set to expire 3 month(s), _____ days from the date of this letter.
Failure to respond within the period for response will cause the application to become abandoned. 35 U.S.C. 133

Part I THE FOLLOWING ATTACHMENT(S) ARE PART OF THIS ACTION:

1. ☑ Notice of References Cited by Examiner, PTO-892.
2. ☑ Notice re Patent Drawing, PTO-948.
3. ☐ Notice of Art Cited by Applicant, PTO-1449
4. ☐ Notice of Informal Patent Application, Form PTO-152
5. ☐ Information on How to Effect Drawing Changes, PTO-1474
6. ☐ _____

Part II SUMMARY OF ACTION

1. ☑ Claims 1-10 are pending in the application.
   Of the above, claims _____ are withdrawn from consideration.
2. ☐ Claims _____ have been cancelled.
3. ☐ Claims _____ are allowed.
4. ☑ Claims 1-10 are rejected.
5. ☐ Claims _____ are objected to.
6. ☐ Claims _____ are subject to restriction or election requirement.
7. ☐ This application has been filed with informal drawings which are acceptable for examination purposes until such time as allowable subject matter is indicated.
8. ☐ Allowable subject matter having been indicated, formal drawings are required in response to this Office action.
9. ☐ The corrected or substitute drawings have been received on _____. These drawings are ☐ acceptable; ☐ not acceptable (see explanation).
10. ☐ The ☐ proposed drawing correction and/or the ☐ proposed additional or substitute sheet(s) of drawings, filed on _____ has (have) been ☐ approved by the examiner, ☐ disapproved by the examiner (see explanation).
11. ☐ The proposed drawing correction, filed _____, has been ☐ approved. ☐ disapproved (see explanation). However, the Patent and Trademark Office no longer makes drawing changes. It is now applicant's responsibility to ensure that the drawings are corrected. Corrections MUST be effected in accordance with the instructions set forth on the attached letter "INFORMATION ON HOW TO EFFECT DRAWING CHANGES", PTO-1474.
12. ☑ Acknowledgment is made of the claim for priority under 35 U.S.C. 119. The certified copy has ☐ been received ☑ not been received
    ☐ been filed in parent application, serial no. _____; filed on _____.
13. ☐ Since this application appears to be in condition for allowance except for formal matters, prosecution as to the merits is closed in accordance with the practice under Ex parte Quayle, 1935 C.D. 11; 453 O.G. 213.
14. ☐ Other

PTOL-326 (Rev. 7-82) EXAMINER'S ACTION

Applicant is reminded of the proper language and format of an Abstract of the Disclosure.

The abstract should be in narrative form and generally limited to a single paragraph on a separate sheet within the range of 50 to 250 words. It is important that the abstract not exceed 250 words in length since the space provided for the abstract on the computer tape used by the printer is limited. The form and legal phraseology often used in patent claims, such as "means" and "said", should be avoided. The abstract should describe the disclosure sufficiently to assist readers in deciding whether there is a need for consulting the full patent text for details.

The language should be clear and concise and should not repeat information given in the title. It should avoid using phrases which can be implied, such as, "The disclosure concerns," "The disclosure defined by this invention," "The disclosure describes," etc.

The present abstract is not worded in a clear and concise manner. Examples of vagueness include; "so-called coefficients blocks occur", "a large part of them assumes", "a zero run together with", and "a further event".

Claims 1-10 are rejected under 35 U.S.C. 112, second paragraph, as being indefinite for failing to particularly point out and distinctly claim the subject matter which applicant regards as the invention.

Claim 1 recites a "method of .... coding a signal", however, the method steps have been completely omitted from the claim and its dependent claims 2-10. If a method is claimed, the steps of the method must be recited.

Claim 1 recites "a signal value A occurring most frequently in runs", however, what "A" represents is never recited in the claims. Further, "most frequently" is very vague.

Claim 1 recites "a Huffman codeword is assigned", however, again no steps to perform this are disclosed.

Claim 1 recites "run length 0, 1, 2, etc. of signal values", which, is very vague. What do "0, 1, 2, etc." represent?

Claim 1 recites "subsequent to the run or .... preceding the run", which, is very vague and ambiguous.

Claims 1-10 are narrative in form and replete with indefinite and vaguely worded language.

Claims 9 and 10 are rejected under 35 U.S.C. 112, fourth paragraph, as being of improper dependent form for failing to further limit the subject matter of a previous claim. The claims introduce a "circuit arrangement for performing the method" and fail to further limit the subject matter of the method claims.

The following is a quotation of the appropriate paragraphs of 35 U.S.C. 102 that form the basis for the rejections under this section made in this Office action:

> A person shall be entitled to a patent unless-
>
> (b) the invention was patented or described in a printed publication in this or a foreign country or in public use or on sale in this country, more than one year prior to the date of application for patent in the United States.

Claim 1 is rejected under 35 U.S.C. 102(b) as being anticipated by Widergreen et al.

Claim 1 recites "a method for bit rate reduction" utilizing "Huffman" coding. Widergreen et al. disclose a method for bit rate reduction characterized in that a Huffman code is assigned to a "run length" (such as a run of zeros) (col. 15, lns. 40-49), and, that signals corresponding to the beginning of the "run" and the ending of the "run" are generated (col. 16, lns. 3-6).

Any inquiry concerning this communication should be directed to Brian K. Young at telephone number 703-557-8694.

Young/vsh
(703) 557-8694
09-10-88

WILLIAM M. SHOOP, JR.
SUPERVISORY PRIMARY EXAMINER
ART UNIT 217

PTO - 948
(Rev. 8-82)

U.S. DEPARTMENT OF COMMERCE
PATENT AND TRADEMARK OFFICE

ATTACHMENT TO PAPER NUMBER 5

GROUP 210

S.N. 096,177

NOTICE OF PATENT DRAWINGS OBJECTION

Drawing Corrections and/or new drawings may only be submitted in the manner set forth in the attached letter, "Information on How to Effect Drawing Changes" PTO-1474.

A. ☑ The drawings, filed on 9-11-87, are objected to as informal for reason(s) checked below:

1. ☐ Lines Pale.
2. ☐ Paper Poor.
3. ☑ Numerals Poor.
4. ☑ Lines Rough ~~and Blurred.~~
5. ☐ Shade Lines Required.
6. ☐ Figures Must be Numbered.
7. ☐ Heading Space Required.
8. ☐ Figures Must Not be Connected.
9. ☐ Criss-Cross Hatching Objectionable.
10. ☐ Double-Line Hatching Objectionable.
11. ☐ Parts in Section Must Be Hatched.
12. ☐ Solid Black Objectionable.
13. ☐ Figure Legends Placed Incorrectly.
14. ☐ Mounted Photographs.
15. ☑ Extraneous Matter Objectionable. [37 CFR 1.84 (l)] AT BOTTOM OF SHEET
16. ☐ Paper Undersized: either 8½" x 14", or 21.0 cm. x 29.7 cm. required.
17. ☐ Proper A4 Margins Required:
    ☐ TOP 2.5 cm. ☐ RIGHT 1.5 cm.
    ☐ LEFT 2.5 cm. ☐ BOTTOM 1.0 cm.
18. ☐ Other:

B. ☑ The drawings, submitted on 9-11-87, are so informal they cannot be corrected. New drawings are required. Submission of the new drawings MUST be made in accordance with the attached letter.

TO SEPARATE, FOLD TOP AND BOTTOM EDGES, SNAP-APART AT PERFORATIONS. DISCARD CARBON

FORM PTO-892 (REV. 3-76) U.S. DEPARTMENT OF COMMERCE PATENT AND TRADEMARK OFFICE

NOTICE OF REFERENCES CITED

SERIAL NO.	GROUP ART UNIT	ATTACHMENT TO PAPER NUMBER
096177	217	5

APPLICANT(S): P. Vogel

U.S. PATENT DOCUMENTS

*		DOCUMENT NO.	DATE	NAME	CLASS	SUB-CLASS	FILING DATE IF APPROPRIATE
	A	4394774	7/83	Widergren et al.	340	347DD	
	B						
	C						
	D						
	E						
	F						
	G						
	H						
	I						
	J						
	K						

FOREIGN PATENT DOCUMENTS

*		DOCUMENT NO.	DATE	COUNTRY	NAME	CLASS	SUB-CLASS	PERTINENT SHTS. DWG.	PERTINENT PP. SPEC.
	L								
	M								
	N								
	O								
	P								
	Q								

OTHER REFERENCES (Including Author, Title, Date, Pertinent Pages, Etc.)

R	
S	
T	
U	

EXAMINER	DATE
B. K. Young	9/3/88

* A copy of this reference is not being furnished with this office action.
(See Manual of Patent Examining Procedure, section 707.05 (a).)

340-347 DD AU 221 ...
7/19/83 XR 4,394,774

United St. es Patent [19]
Widergren et al.

[11] 4,394,774
[45] * Jul. 19, 1983

[54] **DIGITAL VIDEO COMPRESSION SYSTEM AND METHODS UTILIZING SCENE ADAPTIVE CODING WITH RATE BUFFER FEEDBACK**

[75] Inventors: Robert D. Widergren, Saratoga; Wen-Hsiung Chen, Sunnyvale; Stanley C. Fralick, Saratoga; Andrew G. Tescher, Claremont, all of Calif.

[73] Assignee: Compression Labs, Inc., San Jose, Calif.

[*] Notice: The portion of the term of this patent subsequent to Nov. 24, 1998, has been disclaimed.

[21] Appl. No.: 277,981

[22] Filed: Jun. 26, 1981

Related U.S. Application Data

[63] Continuation of Ser. No. 969,991, Dec. 15, 1978, Pat. No. 4,302,775.

[51] Int. Cl.³ G06K 9/36; H04N 9/32; H04N 7/12; H04B 3/46

[52] U.S. Cl. ..... 382/56; 358/13; 358/136; 364/514; 364/582; 340/347 DD; 375/31

[58] Field of Search ..... 358/12, 13, 133, 136, 358/138; 364/514, 515, 576, 582; 340/347 DD; 382/56; 375/31; 179/15.55 R

[56] References Cited

U.S. PATENT DOCUMENTS

3,795,763	3/1974	Golding et al.	358/135 X
3,984,626	10/1976	Mounts et al.	358/135
4,005,411	1/1977	Morris	340/347 DD
4,047,221	9/1977	Yasuda et al.	358/136
4,051,530	9/1977	Kuroda et al.	358/136
4,054,909	10/1977	Kojima et al.	358/13
4,060,797	11/1977	Maxwell et al.	325/419 X
4,125,861	11/1978	Mounts et al.	358/133
4,168,513	9/1979	Hains et al.	358/261
4,179,710	12/1979	Ishiguro et al.	358/13 X

OTHER PUBLICATIONS

N. Ahmed, T. Natarjan, and K. R. Rao, "Discrete Cosine Transform," IEEE Trans. on Computers, Jan. 1974, pp. 90–93.

Ali Habibi, "Hybrid Coding of Pictorial Data", IEEE Trans. on Comm. May 1974, pp. 614–624.

J. A. Roese, W. K. Pratt and G. S. Robinson, "Interframe Cosine Transform Image Coding", IEEE Trans. on Comm. Nov. 1977, pp. 1329–1339.

W. Chen and C. H. Smith, "Adaptive Coding of Monochrome and Color Images", IEEE Trans. on Comm., Nov. 1977, pp. 1285–1292.

P. J. Reedy and D. J. Spencer, "Block Adaptive DPCM Transmission of Images", Proc. of the National Telecommunications Conference, Dec. 1975, pp. 22–10 to 22–17.

A. G. Tescher and R. V. Cox, "Image Coding: Variable Rate Differential Pulse Code Modulation Through Fixed Rate Channel", SPIE vol. 119, Application of Digital Image Processing, IOCC 1977, pp. 147–154.

H. Whitehouse, E. Wrench, A. Weber, G. Claffie, J. Richards, J. Rudnick, W. Schaming, J. Schanne, "A Digital Real Time Intraframe Video Bandwidth Compression System", SPIE vol. 119, Application of Digital Image Processing, IOCC 1977, pp. 64–78.

G. G. Murray, "Microprocessor System for TV Imagery Compression", SPIE vol. 119, Application of Digital Image Processing, IOCC 1977, pp. 121–129.

S. C. Knauer, "Real-Time Video Compression Algorithm for Hadamard Transform Processing", SPIE vol. 66, (1975) Efficient Transmission of Pictorial Information, pp. 58–69.

A. Habibi and B. H. Batson, "Potential Digitization/Compression Techniques for Shuttle Video", IEEE Trans. on Comm., Nov. 1978, pp. 1671–1681.

A. Habibi, "Comparison of nth-Order DPCM Encoder with Linear Transformations and Block Quantization Techniques", IEEE Trans. on Comm. Technology, Dec. 1971, pp. 948–956.

R. V. Cox and A. G. Tescher, "Channel Rate Equalization Techniques for Adaptive Transform Coders", SPIE vol. 87, Advances in Image Transmission Techniques (1976), pp. 239–246.

W. Chen and S. C. Fralick, "Image Enhancement Using Cosine Transform Filtering", Image Science Mathematics Symposium Proceedings, Nov. 10–12, 1976, Monterey, CA.

D. A. Huffman, "A Method for the Construction of

Minimum-Redundancy Codes", Proc. of the IRE, Sep. 1952, pp. 1098–1101.
H. C. Andrews and W. K. Pratt, "Fourier Transform Coding of Images", Hawaii International Conference on System Sciences, Sep. 14, 1967.
W. K. Pratt, W. Chen and L. R. Welch, "Slant Transform Image Coding", IEEE Trans. on Comm., Aug. 1974, pp. 1075–1093.
A. Habibi and P. A. Wintz, "Image Coding by Linear Transformation and Block Quantization", IEEE Trans. on Comm. Technology, Feb. 1971, pp. 50–62.
W. K. Pratt, *Digital Image Processing*, John Wiley and Sons, Inc. (1978), ISBN 0-471-01888-0, in particular chapter 21–22, (pp. 591–661).
M. Hamidi and J. Pearl, "Comparison of the Cosine and Fourier Transforms of Markov-1 Signals", IEEE Trans. on Acoustical, Speech, and Signal Processing, vol. ASSP-24, Oct. 1976, pp. 428–429.
A. K. Jain, "A Sinusoidal Family of Unitary Transforms", IEEE Trans. on Pattern Analysis and Machine Intelligence, vol. PAMI-1, No. 4, Oct. 1979, pp. 356,365.
W. Chen, C. H. Smith and S. C. Fralick, "A Fast Computational Algorithm for the Discrete Cosine Transform", IEEE Trans. on Comm., vol. COM-25, No. 9, Sep. 1977, pp. 1004–1009.
R. M. Haralick, "A Storage Efficient Way to Implement the Discrete Cosine Transform", IEEE Trans. on Computers, vol. C-25, Jul. 1976, pp. 764–765.
Bahl & Kobayashi, "Image Data Compression by Predictive Coding II: Encoding Algorithms:", IBM J. Research Develop't., Mar. 1974, pp. 172–179.
Haskell, "Frame-to-Frame Coding of Television Pictures Using Two-Dimensional Fourier Transforms"; IEEE Trans. Info. Theory, vol. IT-20, No. 1, Jan. '74, pp. 119–120.
Pratt, "Spatial Transform Coding of Color Images"; IEEE Trans. Comm. Tech., vol. Com-19, No. 6, Dec. 1971.
Goertzel et al., "Two Dimensional Image Data Compression and Decompression System", Aug. 17, 1979, 358/261.
Pratt & Andrews, "Application of Fourier-Hadamard Transformation to Bandwidth Compression", Proc. Polytechnic Institute of Brooklyn, 1969, pp. 515–554.
Pratt, Kane & Andrews, "Hadamard Transform Image Coding", Proc. IEEE, vol. 57, No. 1, Jan. 1969, pp. 58–68.
Andrews & Pratt, "Television Bandwidth Reduction by Encoding Spatial Frequencies", SMPTE Journal, vol. 77, No. 12, Dec. 1968, pp. 1279–1281.
Andrews & Pratt, "Television Bandwidth Reduction by Fourier Image Coding," Paper, 103rd Tech. Conf. SMPTE, May 5–10, 1968.
Andrews & Pratt, "Transform Image Coding", Paper, Symposium on Computer Processing in Comm., Polytechnic Institute, Brooklyn, Apr. 8–10, '69, pp. 63–84.

Primary Examiner—Aristotelis M. Psitos
Attorney, Agent, or Firm—David B. Harrison

[57] ABSTRACT

A digital video compression and expansion system and its methods for compressing and expanding digitalized video signals in real time at rates up to NTSC color broadcast rates are disclosed. The system compressor receives digitalized video frames divided into subframes, performs in a single pass a spatial domain to transform domain transformation in two dimensions of the picture elements of each subframe, normalizes the resultant coefficients by a normalization factor having a predetermined compression ratio component and an adaptive rate buffer capacity control feedback component, to provide compression, encodes the coefficients with a minimum redundancy coding scheme and stores them in a first rate buffer memory asynchronously at a high data transfer rate from which they are put out at a slower, synchronous rate. The compressor adaptively determines the rate buffer capacity control feedback component in relation to instantaneous data content of the rate buffer memory in relation to its capacity, and it controls the absolute quantity of data resulting from the normalization step so that the buffer memory is never completely emptied and never completely filled. In expansion, the system essentially mirrors in reverse the steps performed during compression. An efficient, high speed decoder forms an important aspect of the present invention. The compression system forms an important element of a disclosed color broadcast compression system.

11 Claims, 30 Drawing Figures

340-347 DG AU 234 EX
CCC22 XR 4,394,774

UNITED STATES PATENT AND TRADEMARK OFFICE

CERTIFICATE OF CORRECTION

PATENT NO. : 4,394,774
DATED : July 19, 1983
INVENTOR(S) : Widergren, et al.

It is certified that error appears in the above-identified patent and that said Letters Patent are hereby corrected as shown below:

In the drawings, sheet 21 of 22, Fig. 29, the titles of the two block diagrams reading "CHROM/NANCE ENCODER" should read --CHROMINANCE ENCODER--.

In the specification, in column 1 at line 42, "televsion" should read --television--. In column 2 at line 23, "normaly" should read --normally--; at lines 59 and 60, "sufferened" should read --suffered--. In column 4 at line 5, "tranform" should read --transform--; at line 18, "preseved" should read --preserved--. In column 5 at line 42, "decorder" should read --decoder--. In column 6 at line 26, "consine" should read --cosine--. In column 8 at line 6, "Viterbi decoder 20" should read --Viterbi decoder 30--; at line 14, "inputs" should read --puts--. In column 9 at line 40, "buffer change" should read --buffer status change--; in column 9 at line 46, "btween" should read --between--. In column 11 at line 35, "the" should read --then--; at line 54, "encoer" should read --encoder--. In column 12 at line 16, "sheet" should read --sheer--; at line 17, "requiring" should read --required--; at line 30, "Tranform" should read --Transform--; at line 46, "shffled" should read --shuffled--. In column 13 at line 7, "12" should read --112--; at line 30, "contro" should read --control--; at line 44, "the shuffle multiply" should read --The shuffle multiply--. In column 14 at line 2, "storedin" should read --stored in--; at line 7, "shuffe" should read --shuffle--; at line 23, "tranformer" should read --transformer--; at line 30, "fur" should read --four--; at line 33, "pair 44, 146" should read --pair 144, 146--; at line 56, "Acces" should read --Access--;

UNITED STATES PATENT AND TRADEMARK OFFICE

CERTIFICATE OF CORRECTION

PATENT NO. : 4,394,774

DATED : July 19, 1983

INVENTOR(S) : Widergren, et al.

It is certified that error appears in the above-identified patent and that said Letters Patent are hereby corrected as shown below:

at line 59, "transfrmer" should read --transformer--. In column 15 at line 17, "PROM" should read --PROM 170--; at line 38, "Encloder" should read --Encoder--; at line 42, "frm" should read --from--; at line 47, "truncted" should read --truncated--. In column 16 at line 11, "18" should read --188--; at line 13, "FIDO" should read --FIFO--; at line 24, "$F_B$and" should read --F_B, and--. In column 17 at line 64, "afs" should read --also--. In column 18 at line 5, "FIFI" should read --FIFO--. In column 19 at line 29, "eight of sixteen" should read --eight to sixteen--; at line 49, "70" should read --72--.

In the claims, and specifically in claim 1 at line 28, "coder" should read --coded--. In claim 3 at line 16, "substantially" should read --statistically--; at line 28, "capcity" should read --capacity--; at line 32, "cooled" should read --coded--. In claim 4 at line 14, "theoref" should read --thereof--.

UNITED STATES PATENT AND TRADEMARK OFFICE

CERTIFICATE OF CORRECTION

PATENT NO. : 4,394,774 Page 3 of 3

DATED : July 19, 1983

INVENTOR(S) : Widergren, et al.

It is certified that error appears in the above-identified patent and that said Letters Patent are hereby corrected as shown below:

In claim 6 at line 10, "capaicty" should read --capacity--. In claim 8 at line 2, "dat" should read --data--; at line 22, "meand" should read --means--. In claim 10 at line 20, "said buffer" should read --said first buffer--; at line 26, "desorete" should read --discrete--; at line 38, "ecoder" should read --encoder--. In claim 11 at line 14, "rate to" should read --rate adapted to--; at line 48, "tranformed" should read --transformed--.

Signed and Sealed this

Twenty-ninth Day of May 1984

[SEAL]

Attest:

GERALD J. MOSSINGHOFF

Attesting Officer Commissioner of Patents and Trademarks

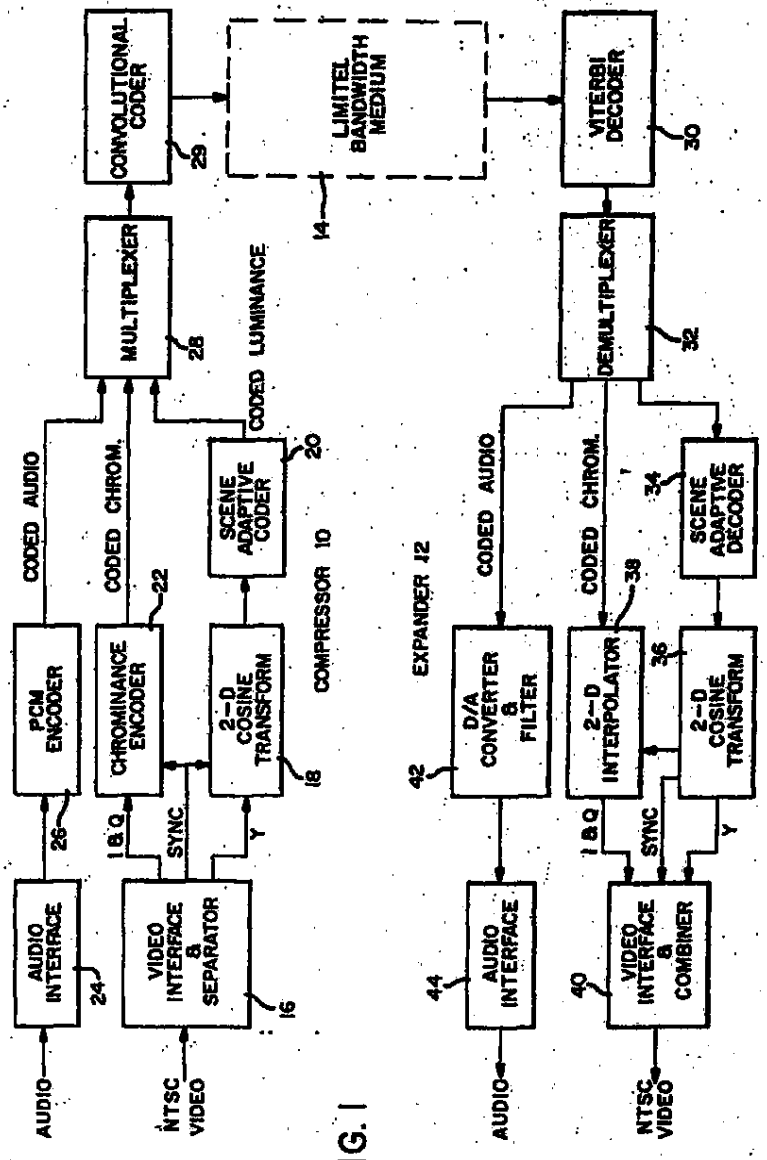
CONVOLUTIONAL CODER
29
LIMITED BANDWIDTH MEDIUM
14
VITERBI DECODER
30
MULTIPLEXER
28
DEMULTIPLEXER
32
CODED LUMINANCE
CODED AUDIO
CODED CHROM.
SCENE ADAPTIVE CODER
20
SCENE ADAPTIVE DECODER
34
COMPRESSOR 10
EXPANDER 12
PCM ENCODER
26
CHROMINANCE ENCODER
22
2-D COSINE TRANSFORM
18
D/A CONVERTER & FILTER
42
2-D INTERPOLATOR
38
2-D COSINE TRANSFORM
36
I & Q
SYNC
Y
AUDIO INTERFACE
24
VIDEO INTERFACE & SEPARATOR
16
AUDIO INTERFACE
44
VIDEO INTERFACE & COMBINER
40
AUDIO
NTSC VIDEO
AUDIO
NTSC VIDEO

FIG. 1

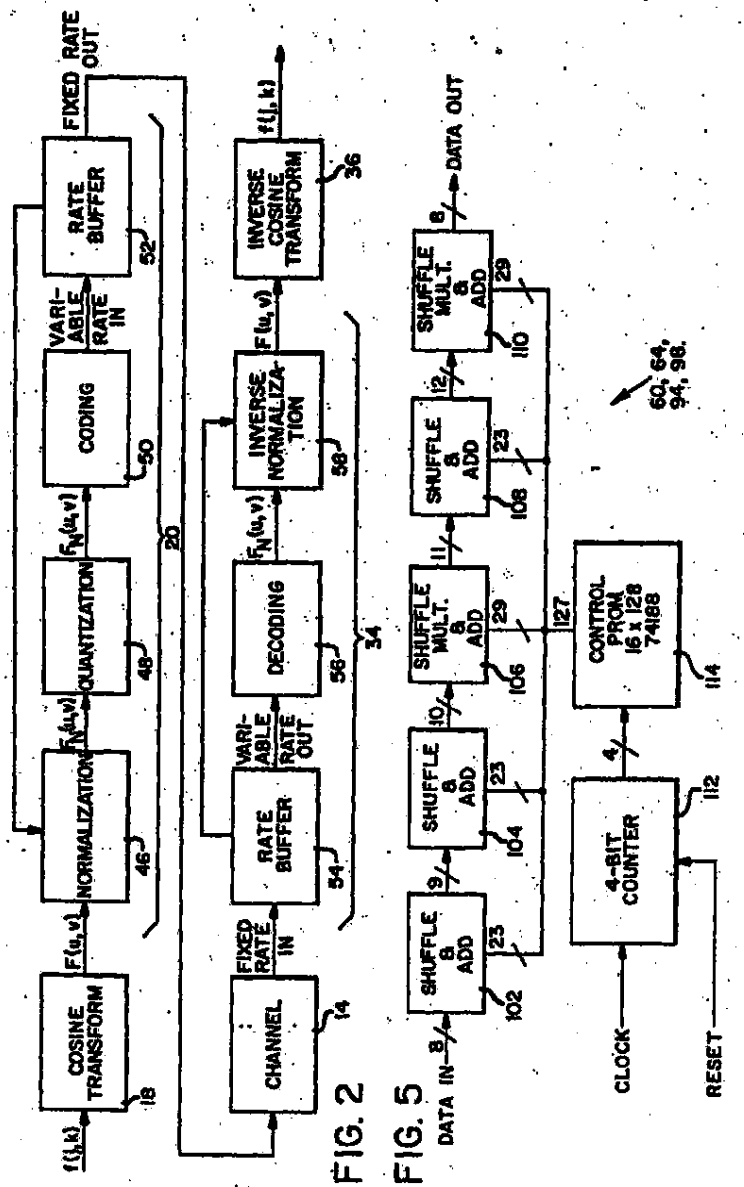
f(j,k)
COSINE TRANSFORM
18
F(u,v)
NORMALIZATION
46
F_N(u,v)
QUANTIZATION
48
F_N(u,v)
CODING
50
VARIABLE RATE IN
RATE BUFFER
52
FIXED RATE OUT
20
FIXED RATE IN
CHANNEL
14
VARIABLE RATE OUT
RATE BUFFER
54
F_N(u,v)
DECODING
56
F_N(u,v)
INVERSE NORMALIZATION
58
F(u,v)
INVERSE COSINE TRANSFORM
36
f(j,k)
34
DATA IN
8
SHUFFLE & ADD
102
23
SHUFFLE & ADD
104
23
SHUFFLE MULT. & ADD
106
29
SHUFFLE & ADD
108
23
SHUFFLE MULT. & ADD
110
29
DATA OUT
8
4-BIT COUNTER
112
CONTROL PROM 16 x 128 74188
114
127
60, 64, 94, 96
CLOCK
RESET

FIG. 2

FIG. 5

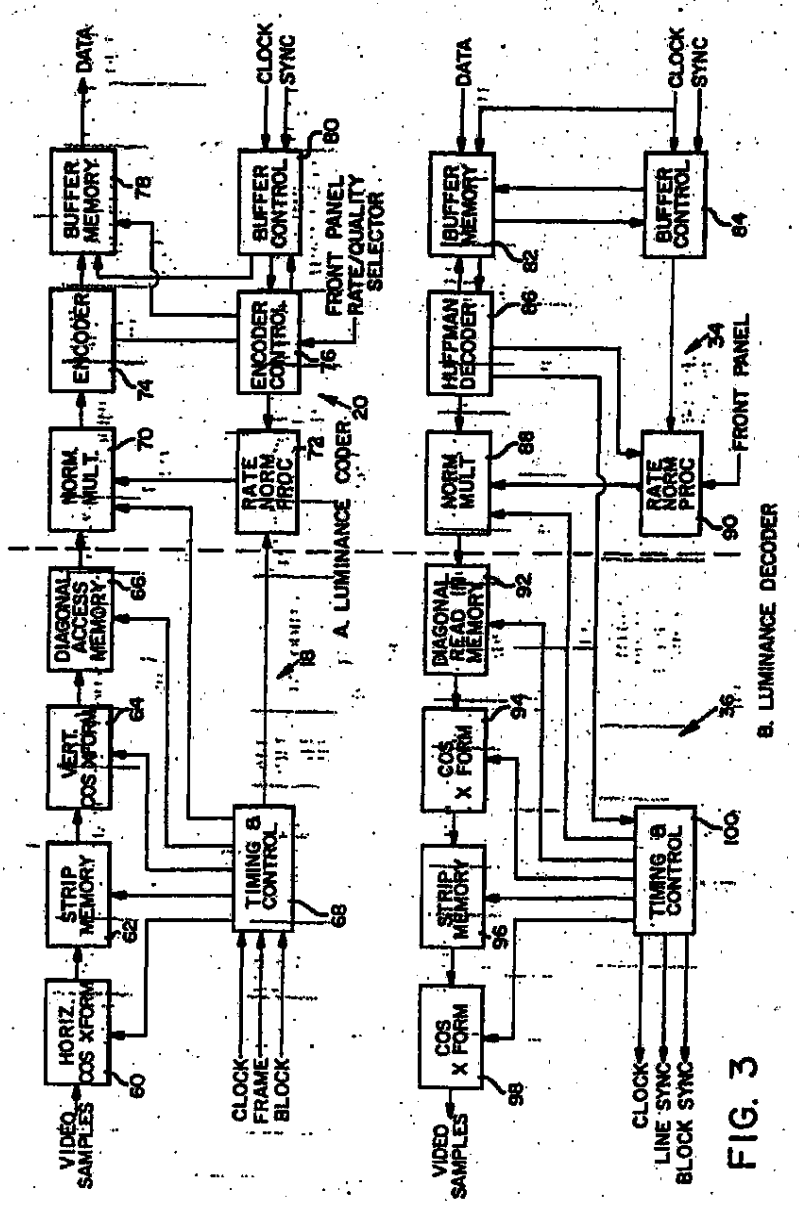
DATA
CLOCK
SYNC
BUFFER MEMORY
78
BUFFER CONTROL
80
ENCODER
74
ENCODER CONTROL
76
FRONT PANEL RATE/QUALITY SELECTOR
NORM. MULT.
70
RATE NORM. PROC
72
20
A. LUMINANCE CODER
DIAGONAL ACCESS MEMORY
66
18
VERT. COS X FORM
64
STRIP MEMORY
62
TIMING & CONTROL
68
HORIZ. COS X FORM
60
VIDEO SAMPLES
CLOCK
FRAME
BLOCK
BUFFER MEMORY
82
BUFFER CONTROL
84
HUFFMAN DECODER
86
34
FRONT PANEL
NORM MULT
88
RATE NORM PROC
90
B. LUMINANCE DECODER
DIAGONAL READ (IN) MEMORY
92
36
COS X FORM
94
STRIP MEMORY
96
TIMING & CONTROL
100
COS X FORM
98
VIDEO SAMPLES
CLOCK
LINE SYNC
BLOCK SYNC

FIG. 3