EXHIBIT 8

OVER 100,000 COPIES SOLD

THE ILLUSTRATED DICTIONARY OF ELECTRONICS

SEVENTH EDITION

STAN GIBILISCO

TAB The Electronics Authority

The Illustrated Dictionary of Electronics

Seventh Edition

Stan Gibilisco
Editor-in-Chief

McGraw-Hill
New York San Francisco Washington, D.C. Auckland Bogotá
Caracas Lisbon London Madrid Mexico City Milan
Montreal New Delhi San Juan Singapore
Sydney Tokyo Toronto

Library of Congress Cataloging-in-Publication Data

Gibilisco, Stan.
The illustrated dictionary of electronics / Stan Gibilisco.—7th ed.
p. cm.
ISBN 0-07-024186-4 (pbk.)
1. Electronics—Dictionaries. I. Title.
TK7804.G497 1997
621.381'03—dc21 97-9081
CIP

McGraw-Hill
A Division of The McGraw-Hill Companies

Copyright © 1997 by The McGraw-Hill Companies, Inc. All rights reserved. Printed in the United States of America. Except as permitted under the United States Copyright Act of 1976, no part of this publication may be reproduced or distributed in any form or by any means, or stored in a data base or retrieval system, without the prior written permission of the publisher.

1 2 3 4 5 6 7 8 9 0 FGR/FGR 9 0 2 1 0 9 8 7

ISBN 0-07-024186-4

The sponsoring editor for this book was Scott Grillo, and the production supervisor was Pamela Pelton. It was set in Bookman by Lisa Mellott through the services of Barry E. Brown (Broker—Editing, Design and Production).

Printed and bound by Quebecor/Fairfield.

McGraw-Hill books are available at special quantity discounts to use as premiums and sales promotions, or for use in corporate training programs. For more information, please write to the Director of Special Sales, McGraw-Hill, 11 West 19th Street, New York, NY 10011. Or contact your local bookstore.

Information contained in this work has been obtained by The McGraw-Hill Companies, Inc. ("McGraw-Hill") from sources believed to be reliable. However, neither McGraw-Hill nor its authors guarantees the accuracy or completeness of any information published herein and neither McGraw-Hill nor its authors shall be responsible for any errors, omissions, or damages arising out of use of this information. This work is published with the understanding that McGraw-Hill and its authors are supplying information but are not attempting to render engineering or other professional services. If such services are required, the assistance of an appropriate professional should be sought.



This book is printed on acid-free paper.

and provided with a recessed, concentrically mounted end pin, which serves as the other contact.

coaxial driver See COAXIAL SPEAKER.

coaxial filter **1.** A filter that uses a coaxial cable as a tuned circuit. **2.** A filter designed to be used in a coaxial transmission line.

coaxial jack A female receptacle or connector, whose concentric terminals have the same spacing as a male coaxial-cable connector designed to fit it.

coaxial line A signal transmission line consisting of COAXIAL CABLE.

coaxial-line frequency meter A microwave absorption wavemeter (see WAVEMETER) with input and output receptacles for insertion into a coaxial line.

coaxial-line oscillator See CONCENTRIC-LINE OSCILLATOR.

coaxial loudspeaker See COAXIAL SPEAKER.

coaxial plug A male connector whose concentric terminals have the same spacing as a female coaxial cable connector designed to fit it.

coaxial receptacle A coaxial connector, such as a coaxial jack or plug. Receptacles are installed in equipment, whereas plugs are usually attached to the end of coaxial cables.

coaxial relay A relay designed to connect and disconnect, or to interchange, coaxial cables in a transmission line without disturbing the characteristic impedance of the line.

coaxial speaker Also called *coaxial driver* and *coaxial loudspeaker.* A large low-frequency speaker and a small high-frequency speaker mounted concentrically, the smaller within the larger. When used with a crossover network, this arrangement provides fairly good wide-range audio-frequency response, and saves physical space, compared with the use of separate speakers.

coaxial stub **1.** A length of coaxial cable acting as a branch to another coaxial cable. Commonly used for impedance matching. **2.** A length of coaxial cable, usually cut to ¼ or ½ wavelength, and connected across a coaxial transmission line to act as a WAVETRAP. Commonly used to reject strong interfering signals.

coaxial switch A switch designed to connect and disconnect, or to interchange, coaxial cables in a transmission line without disturbing the characteristic impedance of the line.

coaxial tank A tank circuit consisting of a rod within a cylinder. The tank is usually tuned by a small variable capacitor connected between the rod and cylinder at one end of the combination. Generally used at ultra-high frequencies (UHF).

coaxial-tank oscillator A stable, self-excited oscillator that uses a COAXIAL TANK. Also see CONCENTRIC-LINE OSCILLATOR.

coaxial transistor A transistor in which a semiconductor wafer is mounted centrally in a metal cylinder (the base connection) and is contacted on opposite faces by the emitter and collector whiskers, which are axially mounted.

coaxial transmission line A transmission line that is a COAXIAL CABLE.

coaxial wavemeter A type of absorption wavemeter in which the tunable element is a section of coaxial line (i.e., a metal cylinder surrounding a metal rod). An internal short-circuiting disk is moved along the cylinder to connect its inner wall to selected points along the rod's length, thereby varying the resonant frequency. The instrument is useful at microwave frequencies.

cobalt Symbol, Co. A metallic element. Atomic number, 27. Atomic weight, 58.94.

COBOL Acronym for *common business-oriented language.* A high-level computer programming language in a standard English form, used for business data processing. A COBOL compiler can interpret such statements as "If stock less than minimum, go to reorder."

cochannel interference Interference between similar signals transmitted on the same channel.

Cockcroft-Walton accelerator A proton accelerator in which nuclei of hydrogen atoms are given high velocity through a straight tube by a high dc voltage.

codan Any of several muting (SQUELCH) systems. In particular, a squelch circuit that suppresses noise in a sensitive receiver equipped with automatic gain control (AGC). The receiver is quiet until a carrier of predetermined strength is received. The name is an acronym for *carrier-operated device antinoise.*

codan lamp A lamp that alerts a radio operator that a signal of satisfactory strength is being received. Also see CODAN.

code **1.** A set of symbols for communications (e.g., the Morse code of radiotelegraphy and wire telegraphy in which dots and dashes correspond to letters, numbers, and marks of punctuation). **2.** In a computer program, symbolically represented instructions. **3.** ENCODE.

codec In encoding and decoding equipment, a *coder/decoder,* usually in a single package and operating at 8 kHz for an input signal with a passband of 3100 Hz (300 to 3400 Hz).

code character **1.** The representation of character in a particular code form. **2.** A sequence of dots and dashes in the Morse code.

code conversion The translation of a coded signal from one form of code to another.

coded decimal digit A number expressed in binary form (computer code), that is, in terms of zeros and ones only.

code-directing characters Characters added to a message to indicate how and where it is going.

coded program See PROGRAM.

coded signal **1.** A wire- or radiotelegraph signal in which secrecy is achieved by using letters in

cipher groups, instead of straight language. **2.** SCRAMBLED SIGNAL.

coded stop See PROGRAMMED HALT.

code elements The smallest identifiable parts that compose a digital code. For example, in computer code, the elements are ones and zeroes (*high* and *low* logic states); in Morse code, they are *dots* and *dashes*.

code holes In a punched card or tape, holes representing data.

code line A written computer program instruction.

code machine Any one of several devices for recording or reproducing code signals.

code position The part of a data medium (e.g., card row) reserved for data.

code-practice oscillator A simple keyed audio oscillator intended for practicing Morse code.

coder **1.** In computer operations, a person who prepares instructions from flow charts and procedures devised by a programmer. **2.** A device that delivers coded signals.

code receiver A radiotelegraph receiver.

code ringing A method of ringing a telephone subscriber in a predetermined manner to convey a certain message.

code segment The instruction part of computer storage associated with a process. Compare DATA SEGMENT and DUMP SEGMENT.

code set The collection of codes representing all of the characters in a language.

code speed See KEYING SPEED.

code transmitter **1.** A radiotelegraph transmitter. **2.** A tape-operated keyer for wire telegraphy or radiotelegraphy.

code word See PHONETIC ALPHABET CODE WORD.

coding **1.** Performing the service of a CODER. **2.** Writing instructions for a digital computer; a part of programming.

coding check A pencil-and-paper verification of a routine's validity.

coding sheet A form on which program instructions are written prior to input.

codiphase radar A radar system that uses beam forming, signal processing, and a phased-array antenna.

codistor A voltage-regulating semiconductor device.

coefficient **1.** A factor in an indicated product. Thus, in $4y$, 4 is the coefficient of y. **2.** A parameter that indicates a specific characteristic of some component or device (e.g., COEFFICIENT OF COUPLING or COEFFICIENT OF REFLECTION).

coefficient of coupling Symbol k. The ratio of MUTUAL INDUCTANCE between two inductors to the maximum possible (theoretical) value of mutual inductance. This ratio is always greater than or equal to 0 (no coupling between inductors), and less than or equal to 1 (perfect coupling between inductors).

coefficient of current detection See CURRENT-DETECTION COEFFICIENT.

coefficient of reflection A measure of the amount of electromagnetic field reflected in a transmission line from the load feed point. The coefficient of reflection is equal to the square root of the reflected power divided by the forward power.

coercive force The demagnetizing force required to remove residual magnetism from a material.

coercivity See COERCIVE FORCE.

cogging Nonuniform rotation of a motor armature. The velocity increases as an armature coil enters the magnetic field and decreases as it leaves the field.

coherence In electromagnetic radiation, a condition in which all the wavefronts are in phase. This results in high energy concentration, and makes possible the long-distance transmission of infrared, visible light, and ultraviolet, because the rays are almost perfectly parallel. It also makes possible the extreme radiation intensity characteristic of some LASER devices.

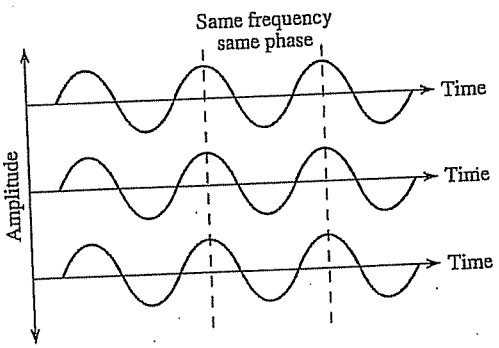

coherence

coherent bundle A bundle of optical fibers, such that the individual fibers are in the same relative positions at either end of the bundle.

coherent carrier A carrier that agrees in frequency and phase with a reference signal.

coherent electroluminescent device See LASER DIODE.

coherent light Visible light in which the phase relationship between successive waves is such that the beam consists of parallel rays that provide a high concentration of energy. Also see LASER.

coherent-light radar See COLIDAR.

coherent oscillator In a radar system, an oscillator that provides a COHERENT REFERENCE.

coherent-pulse operation Pulse operation characterized by a fixed phase relationship between pulses.

pip See BLIP.

pi pad A resistance-type attenuator having a series arm, a shunt input arm, and shunt output arm; its name is derived from its resemblance to the Greek letter pi. Also see PAD.

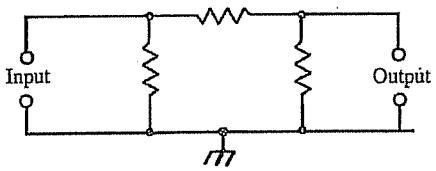

pi pad

pipe radiator A waveguide having an open end from which microwave energy is radiated.

Pirani gauge A type of vacuum gauge in which a heated filament, composing one arm of a four-arm resistance bridge, is sealed into the vacuum system. The bridge is balanced before evacuation starts. As evacuation progresses, the heat removed from the filament becomes proportional to the pressure in the system, and the resistance of the filament changes accordingly. The bridge is then rebalanced, and the difference between initial and subsequent null conditions indicate the extent of the vacuum when the bridge has been appropriately calibrated.

pi section An unbalanced filter or tuner section whose schematic representation has the general shape of the uppercase Greek letter pi.

pi-section coupling Use of a PI SECTION for coupling a radio transmitter to an antenna. Also see COLLINS COUPLER and PI-SECTION TANK.

pi-section filter A pi section used as either a low-pass or high-pass filter, depending on the position of the capacitors in the circuit.

pi-section tank A pi section used as the collector, drain, or plate tank circuit of a radio-frequency power amplifier, and also serving as an antenna coupler.

piston **1.** The movable element (cone) of a loudspeaker. **2.** The movable, solid plunger of a trimmer capacitor that consists of a plug within a cylinder.

piston directivity Directivity of sound emitted by the piston of a loudspeaker (see PISTON, 1). As the frequency of the audio signal increases, radiation from a loudspeaker tends to be concentrated along the axis of the piston.

pit **1.** A microscopic depression in a compact disc; scatters and/or absorbs light from the laser, rather than reflecting it. Compare LAND, **1. 2.** In a printed-circuit board, a pockmark in a component or foil run. **3.** A pockmark in a metallic substance, resulting from corrosion.

pitch **1.** The frequency of a sound, either in general terms (e.g., low, midrange, and high) or as a specific quantity (e.g., 2450 Hz). **2.** The distance between the peaks of adjacent grooves on a phonograph disc. **3.** The distance between adjacent threads of a screw. **4.** The distance between centers of turns in a coil (see PITCH OF WINDING) **5.** The number of teeth or threads per unit length. **6.** The distance along its axis a propeller moves in a revolution. **7.** Up-and-down motion of a robot end effector or other electromechanical device. **8.** The extent or range of movement, as defined in **7.**

pitch of winding In a coil, the distance from the center of one turn to the center of the adjacent turn in a single layer of winding.

PIV Abbreviation of PEAK INVERSE VOLTAGE.

pivot The sometimes jeweled, stationary member of the bearing in an analog meter movement.

pi-wound choke A choke coil consisting of several series-connected sections, mounted on a single core and separated to reduce internal capacitance.

pix Abbreviation of PICTURE.

pixel Contraction of *picture element.* The smallest bit of data in a video image. Also called *pel.* The smaller the size of the pixels in an image, the greater the resolution for a given image area.

pixel aspect ratio In a video image, the ratio of PIXEL height to pixel width.

pix tube See PICTURE TUBE.

PL Abbreviation for PRIVATE LINE.

place effect An apparent change in the perceived pitch of a sound, caused by variations in the way the waves interact inside the human ear.

planar diffusion In the production of a semiconductor device, the diffusion of all the elements into one face of a wafer. Consequently, connections to the elements all lie in one plane. Also see EPITAXIAL PLANAR TRANSISTOR and PLANAR TRANSISTOR.

planar diode A semiconductor diode, having a pn junction that lies entirely within a single plane.

planar epitaxial passivated diode A junction diode that, like the planar epitaxial transistor, has been manufactured by planar diffusion, then passivated to protect the junction. Also see EPITAXIAL GROWTH, EPITAXY, PASSIVATION, and PLANAR DIFFUSION.

PL/1 A computer programming language that is a hybrid of scientific and commercial types (like ALGOL and COBOL), the combined features being powerful problem-solving and mass-data-handling abilities.

planar epitaxial passivated transistor A planar epitaxial transistor that has been passivated to protect the exposed junctions. Also see EPITAXIAL PLANAR TRANSISTOR, PLANAR TRANSISTOR, EPITAXIAL TRANSISTOR, PASSIVATION, and PLANAR TRANSISTOR.

planar transistor A transistor in which the emitter, base, and collector elements terminate on

quadrilateral **1.** Pertaining to an object having four sides. **2.** A four-sided plane polygon.

quadrillion The number 1,000,000,000,000,000 (10^{15}).

quadripartite Having four parts.

quadripole network A four-terminal network, usually with input- and output-terminal pairs.

quadrivalent Having a valence of 4. Tin, for example, is quadrivalent. Also called TETRAVALENT.

quadruped robot A robot with four legs that can move independently. It offers better stability than three-legged designs. Functions well in mobile machines that must navigate irregular terrain.

quadrupler **1.** A rectifier circuit that delivers a direct-current output voltage approximately equal to four times the peak value of the alternating-current input voltage. **2.** An amplifier or other circuit that delivers an output signal of four times the frequency of the input signal.

quadruplex circuit A data circuit in which two messages are carried in each direction simultaneously.

quadrupole **1.** A combination of two dipoles, producing a force that varies inversely with the fourth power of distance. **2.** A four-pole magnet used in some synchrotrons and linear accelerators to focus and bend a particle beam. **3.** A system consisting of two dipoles of equal and opposite direct moment.

qualification The quality-control or quality-assurance scheme used in the production of components, circuits, or systems. Certain minimum requirements must be met for a device to obtain qualification.

qualitative test A test performed to determine the general mode of operation or the presence of certain factors, without regard to numerical values. Compare QUANTITATIVE TEST.

quality **1.** In audio-frequency applications, fidelity of transmission or reproduction. **2.** The degree of conformity of a product to specifications.

quality assurance The outcome of measures taken to bring performance into conformity with specifications. See QUALITY, **2.**

quality control The surveillance of selection, manufacturing, and testing operations to ensure conformity of a product to specifications.

quality-control engineering The branch of engineering concerned principally with the technical methods of quality control and statistical methods of assessing quality (see QUALITY, **2**).

quality-control technician A technician whose principal duty is the performance of operations in the areas of incoming inspection, manufacturing support, and product testing. Sometimes statistical evaluations are required.

quality engineering A field of engineering that deals with quality assurance and quality control in the production of components, circuits, and systems.

quality factor See *Q*.

quality-factor bridge See *Q* BRIDGE.

quality-factor meter See *Q* METER.

quanta Plural of QUANTUM.

quantimeter An instrument used to measure the quantity of X rays to which a body has been exposed.

quantitative test A test performed to determine the numerical values (and their relationships) connected with observable phenomena. Compare QUALITATIVE TEST.

quantity **1.** A parameter (e.g., collector current, grid voltage, etc.). **2.** In calculations, a positive or negative real number. **3.** Electrical charge, usually specified or measured in coulombs (see COULOMB). Also called *electrical quantity*.

quantization The conversion of a quantity having infinitely many possible values or levels (such as an analog signal) into one that can attain only a finite number of defined values or levels (such as a digital signal). The number of levels is usually some integral power of 2 (i.e., 2, 4, 8, 16, 32, etc.). This allows the levels to be represented as binary numbers.

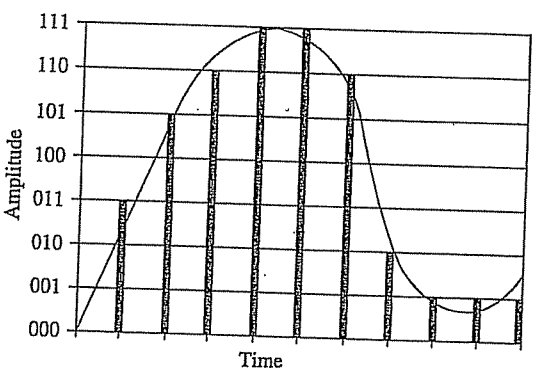

quantization

quantization distortion Distortion introduced by the process of QUANTIZATION in a communications or broadcast signal.

quantization distortion power The level of the distortion in a signal resulting from QUANTIZATION. It is expressed in microwatts, milliwatts, or watts. It can also be expressed as a percentage, or as a level in decibels, relative to the power level of the input signal.

quantization error The difference between the actual values of quantities and their quantized values.

quantization noise Noise introduced by the process of QUANTIZATION in a communications or broadcast signal.

quantize **1.** To perform the process of QUANTIZATION. **2.** To split a quantitative commodity,

tracking Following in step, as when ganged circuits resonate at the same frequency (or some frequency difference) at all settings, or when a missile closely follows its guiding signal.

tracking force See VERTICAL STYLUS FORCE.

track label On a magnetic storage medium, a record that identifies a track.

tracking mode In tracking supplies, the usual manner of operation in which the output of each of the separate supplies automatically follows that of the one being adjusted. Compare INDEPENDENT MODE.

tracking supplies Adjustable power supplies, packaged two or more to the unit, in which the output of each will automatically follow adjustment made to one of them.

track pitch The distance between tracks (see TRACK, **2**).

traffic **1.** Collectively, messages handled by a communications station. **2.** Collectively, data and instructions handled by a computer system in continual use.

trailer label At the end of a magnetic-tape or floppy-disk file, a record signaling the end of the file and often giving such information as the number of records in the file.

trailer record At the end of a group of computer records, a record containing information relevant to the group's processing.

trailing edge The falling edge of a pulse. Compare LEADING EDGE.

trans Abbreviation of TRANSVERSE.

transaction The exchange of activity that occurs between a computer, via a terminal, and the user, including any processing required (e.g., that involved in adding records to, or deleting them from, a file).

transaction file In data processing, a group of records used to update a master file.

transaction processing In computer operations, the use of a central processor for handling, modifying, or otherwise acting on information by transactions.

transaction tape Magnetic tape on which a transaction file has been recorded.

transadmittance For an active device, the ratio dI_2/dE_1, where I_2 is the alternating-current (ac) component of the current in a second electrode (such as the drain), and E_1 is the ac component of voltage on a first electrode (such as the gate), with constant direct-current operating voltages.

transceiver **1.** A combination radio transmitter-receiver, usually installed in a single housing and sharing some components. Compare TRANSMITTER-RECEIVER. **2.** In computer operations, a read/write data terminal capable of transmitting and receiving information to and from a channel.

transcendental functions Nonalgebraic functions. These include logarithmic functions, exponential functions, trigonometric functions, and inverse trigonometric functions.

transconductance **1.** Symbol, g_m. Unit, micromho. In an electron tube, the extent to which plate current (I_P) changes in response to a change in grid voltage (E_G); $g_m = dI_P/dE_G$. **2.** Symbol, g_{fs}. Unit, micromho. In a field-effect transistor, the extent to which drain current (I_D) changes in response to a change in gate-to-source voltage (V_{GS}); $g_{fs} = dI_D/dV_{GS}$.

transconductance amplifier An amplifier in which the output current is a linear function of the input voltage.

transcribe **1.** To record material, such as a radio program, for future transmission. **2.** In computer operations, the intermedia transfer of data, as from tape to disk.

transcriber A device used for intermedia data transfer (e.g., one that can move the data on magnetic tape to magnetic or optical disc).

transcription A recording of material, such as a record or tape of a radio program, for later use in a transmitter. See ELECTRICAL TRANSCRIPTION.

transcutaneous nerve stimulator Abbreviation, TNS. An electronic device for the temporary relief of pain. In its use, electrodes taped to the skin over the painful area are connected to a portable generator of suitable pulse energy.

transducer A device that converts one quantity into another quantity, specifically when one of the quantities is electrical. Thus, a loudspeaker converts electrical impulses into sound, a microphone converts sound into electrical impulses, a photocell converts light into electricity, a thermocouple converts heat into electricity, etc.

transducer amplifier An amplifier used expressly to boost the output of a transducer.

transducer efficiency For a transducer, the ratio of the output power to the input power.

transductor See MAGNETIC AMPLIFIER.

transfer **1.** To move a signal from one point to another—especially through a modifying circuit or device. **2.** To transmit information or data from one point or device to another, inside or outside a system.

transfer characteristic A figure or plot expressing the output-input signal relationship in a circuit or device. Also see TRANSFER, **1**.

transfer efficiency In a charge-coupled device, the proportion of charge that is transferred under given conditions.

transfer function **1.** See TRANSFER CHARACTERISTIC. **2.** An expression that mathematically shows how two entities or events occurring in different places or at different times are related.

transfer rate The speed at which data can be moved between a computer's internal memory and a peripheral.

transferred charge In a circuit containing a capacitor, the net electric charge that moves around the external circuit from one plate of the capacitor to the other.

transform **1.** See LAPLACE TRANSFORM. **2.** To change the voltage or nature of an electrical pa-

rameter (e.g., high to low voltage and alternating to direct current). **3.** To change the form, but not the content, of data.

transformation constant See DISINTEGRATION CONSTANT.

transformer **1.** A device using electromagnetic induction to transfer electrical energy from one circuit to another (i.e., without direct connection between them). In its simplest form, a transformer consists of separate primary and secondary coils wound on a common core of ferromagnetic material, such as iron. When an alternating current flows through the primary coil, the resulting magnetic flux in the core induces an alternating voltage across the secondary coil; the induced voltage can cause a current to flow in an external circuit. Also see AIR-CORE TRANSFORMER, INDUCTION, INDUCTIVE COUPLING, IRON-CORE TRANSFORMER, and TURNS RATIO. **2.** A section of radio-frequency (RF) transmission line used to match impedances. Also see LINEAR TRANSFORMER.

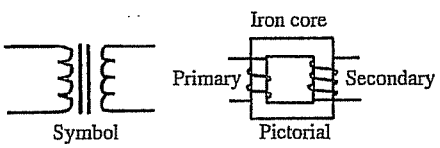

transformer, 1

transformer-coupled amplifier An amplifier using coupling transformers between its stages or at its input and output points. Compare RESISTANCE-CAPACITANCE-COUPLED AMPLIFIER.

transformer coupling The inductive coupling of circuits through a transformer. Also see COEFFICIENT OF COUPLING; INDUCTIVE COUPLING; MUTUAL INDUCTANCE; and TRANSFORMER, **1.**

transformer equivalent circuit An equivalent circuit depicting the various parameters of a transformer (such as primary and secondary resistances, primary and secondary reactances, core losses, etc.) and their relationship to each other.

transformer feedback Inductively coupled feedback (positive or negative) through a transformer.

transformer input current See PRIMARY CURRENT.

transformer input voltage See PRIMARY VOLTAGE.

transformer iron See SILICON STEEL.

transformer loss The expression (in decibels) $10 \log_{10} (P_1/P_2)$, where P_1 is the calculated power that a given transformer should deliver to a particular load impedance, and P_2 is the actual power delivered.

transformer oil A petroleum product in which high-voltage, high-current transformers are sometimes immersed. The oil protects the windings from environmental damage.

transformer output current See SECONDARY CURRENT.

transformer output voltage See SECONDARY VOLTAGE.

transformer-type voltage regulator See VOLTAGE-REGULATING TRANSFORMER.

transformer utilization factor See UTILITY FACTOR.

transient **1.** A sudden, high-voltage spike in an alternating-current system, caused by arcing or lightning. **2.** A spurious signal in a hardcopy-receiving system. **3.** Any short pulse attributable to external causes. **4.** Existing for a short period of time, or intermittently for short periods of time.

transient absorber See SURGE ARRESTER.

transient arrester See SURGE ARRESTER.

transient-based amplifier See CRYSTAL AMPLIFIER, **2.**

transient current A momentary pulse of current. Also see TRANSIENT.

transient response The response of a circuit to a transient, as opposed to its steady-state response, usually evaluated in terms of its ability to reproduce a square wave.

transient suppressor See SURGE ARRESTOR.

transient voltage A momentary pulse of voltage. Also see TRANSIENT.

transient voltmeter An instrument that indicates the voltage of momentary signals. Usually, a peak-reading meter in the instrument displays the highest positive or negative value the transient attains (sometimes holding the deflection for reading later) and can respond to pulses of 1 microsecond in duration.

transistor An active (commonly three-terminal) semiconductor device capable of amplification, oscillation, and switching action. The name is a contraction of *transfer resistor*. Also see ALLOY-DIFFUSED TRANSISTOR, ALLOY TRANSISTOR, BIPOLAR TRANSISTOR, DIFFUSED-BASE TRAN-SISTOR, DIFFUSED EMITTER-AND-BASE TRANSISTOR, DIFFUSED-JUNCTION TRANSISTOR, DIFFUSED MESA TRANSISTOR, DIFFUSED PLANAR TRANSISTOR, DIFFUSED TRANSISTOR, DIFFUSION TRANSISTOR, DOUBLE-BASE JUNCTION TRANSISTOR, FIELD-EFFECT TRANSISTOR, FIELDISTOR, GERMANIUM TRANSISTOR, GROWN-DIFFUSED TRANSISTOR, GROWN-JUNCTION TRANSISTOR, JUNCTION TRANSISTOR, MESA TRANSISTOR, METAL-OXIDE-SEMICONDUCTOR FIELD-EFFECT TRANSISTOR, MICROALLOY DIFFUSED TRANSISTOR, MICROALLOY TRANSISTOR, PHOTOTRANSISTOR, PLANAR EPITAXIAL PASSIVATED TRANSISTOR, PLANAR TRANSISTOR, POINT-CONTACT TRANSISTOR, POWER TRANSISTOR, SILICON TRANSISTOR, SURFACE-BARRIER TRANSISTOR, SURFACE-CHARGE TRANSISTOR, TANDEM TRANSISTOR, THIN-FILM TRANSISTOR, THREE-JUNCTION TRANSISTOR, and UNIJUNCTION TRANSISTOR.

thing under test at selected frequencies and amplitudes.

vibrator-type power supply A battery-operated, high-voltage power supply in which one vibrator (see INTERRUPTER) makes and breaks direct current flowing from the battery into the primary winding of a step-up transformer, and another vibrator rectifies the high voltage delivered by the secondary winding.

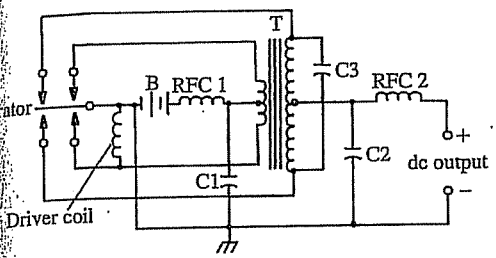

vibrator-type power supply

vibrator-type rectifier A vibrator (see INTERRUPTER) that connects one terminal of the secondary winding of a transformer to an output terminal each time that terminal is positive. When the negative half-cycle appears at the transformer terminal, the vibrator is open. In this way, the alternating-current output of the transformer is rectified.

vibrocardiography A method of monitoring and recording the movement of the chest cavity as a result of the beating of the heart.

vibrograph A device for observing and recording vibration.

vibrometer See VIBRATION METER.

vibroscope An instrument for observing (and sometimes recording) vibration.

Victor Phonetic alphabet communications code word for the letter V.

Victron A brand of polystyrene, a low-loss plastic insulant that is especially useful at high radio frequencies.

video **1.** Pertaining to television—especially to its picture circuitry or to circuits and devices related to television, but used for other purposes. **2.** The picture portion of a television broadcast, as opposed to the sound (audio) portion. **3.** Sometimes, a cathode-ray-tube terminal or display. **4.** Generally, television in adjective sense (e.g., *video play*). **5.** The images on a computer display or monitor.

video amplifier **1.** In television, the wideband stage (or stages) that amplifies the picture signal and presents it to the picture tube. **2.** A similar wideband amplifier, such as an instrument amplifier or preamplifier having at least a 4-MHz bandwidth.

video animation Movement of graphic images on a cathode-ray-tube display by the use of computer-manipulation through special software, under the direction of an operator using a keyboard, joystick, or digitizer.

video buffer A unity-gain circuit that minimizes loading effects caused by having several video multiplexer inputs connected to the same signal source.

video carrier The television carrier amplitude-modulated by the picture information, synchronization pulses, and blanking pulses.

videocassette recorder Abbreviation, VCR. A machine for recording television programs on magnetic-tape cassettes (see CASSETTE, **1**).

videocast **1.** Television broadcast. Also called TELECAST. **2.** To make a television broadcast.

videocaster See TELECASTER.

video CD-ROM A digital optical VIDEODISC, resembling an audio or computer compact disc. A typical disc can store more than an hour's worth of conventional television programming.

video correlator A device used with radar to locate and identify a target with high precision.

video detector In a television receiver, the demodulator for the video signal. This detector follows the video intermediate-frequency amplifier and precedes the video amplifier. It usually embodies a relatively simple, wideband diode circuit.

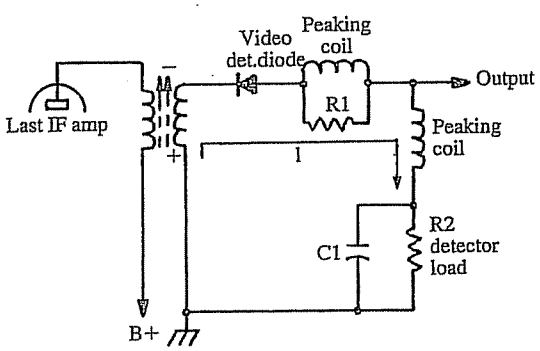

video detector

Video Digitizer Abbreviation, VDIG. A program developed for multimedia video in personal computer systems.

videodisc A flat magnetic or optical disc on which audio-visual programs are recorded, and from which they can be played back into a television receiver or multimedia personal computer.

videodisc recorder Abbreviation, VDR. A machine for recording television programs on discs comparable to those used for sound or data recording.

video discrimination In radar, the use of a circuit or device to decrease the width of the video-amplifier passband.