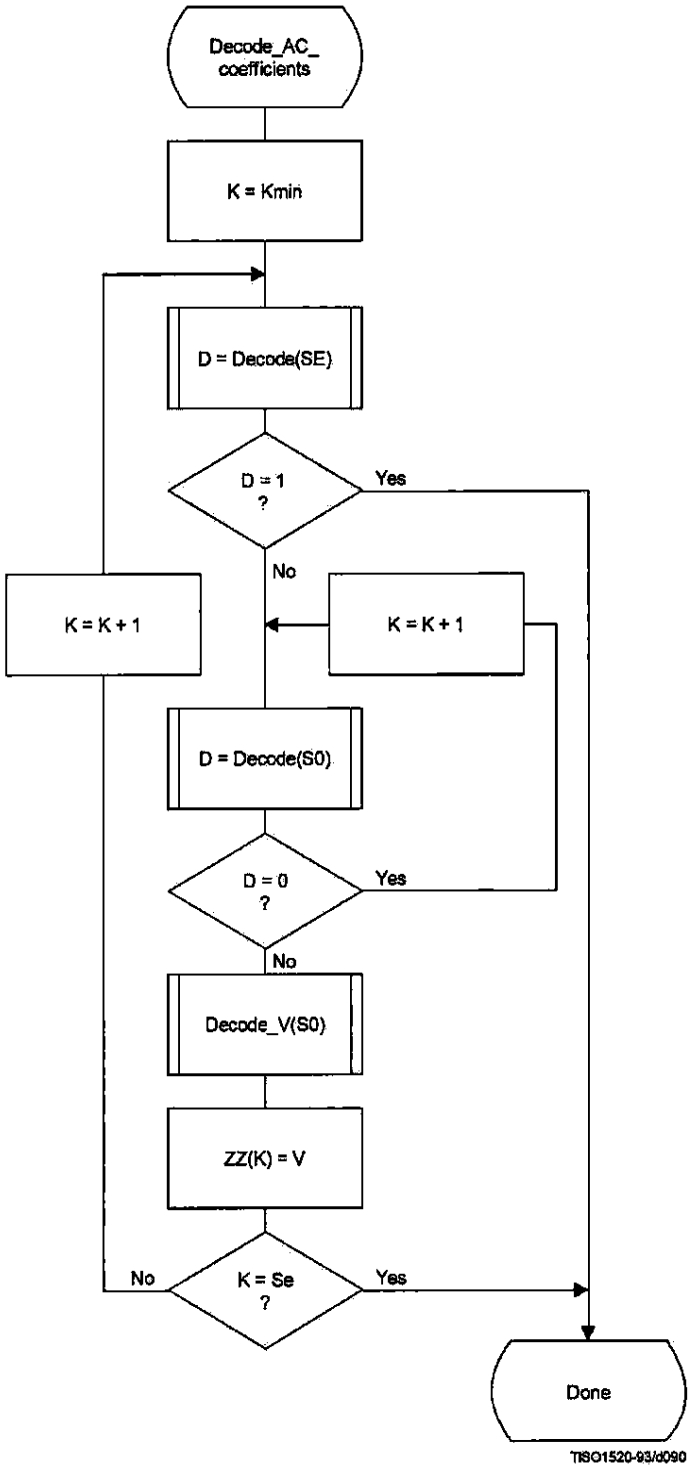

Figure F.20 – Procedure for decoding the AC coefficients

The context-indices used in the AC decoding procedures are defined in Table F.5 (see F.1.4.4.2).

JA480
CONFIDENTIAL BUSINESS INFORMATION PHLPSKD_00047539

In Figure F.20, K is the index to the zig-zag sequence position. For the sequential scan, Kmin = 1 and Se = 63. The decision at the top of the loop is the EOB decision. If the EOB occurs (D = 1), the remaining coefficients in the block are set to zero. The inner loop just below the EOB decoding decodes runs of zero coefficients. Whenever the coefficient is non-zero, "Decode_V" decodes the sign and magnitude of the coefficient. After each non-zero coefficient is decoded, the EOB decision is again decoded unless K = Se.

F.2.4.3 Decoding the binary decision sequence for non-zero DC differences and AC coefficients

Both the DC difference and the AC coefficients are represented as signed two's complement 16-bit integer values. The decoding decision tree for these signed integer values is the same for both the DC and AC coding models. Note, however, that the statistical models are not the same.

F.2.4.3.1 Arithmetic decoding of non-zero values

Denoting either DC differences or AC coefficients as V, the non-zero signed integer value of V is decoded by the sequence shown in Figure F.21. This sequence first decodes the sign of V. It then decodes the magnitude category of V (Decode_log2_Sz), and then decodes the low order magnitude bits (Decode_Sz_bits). Note that the value decoded for Sz must be incremented by 1 to get the actual coefficient magnitude.

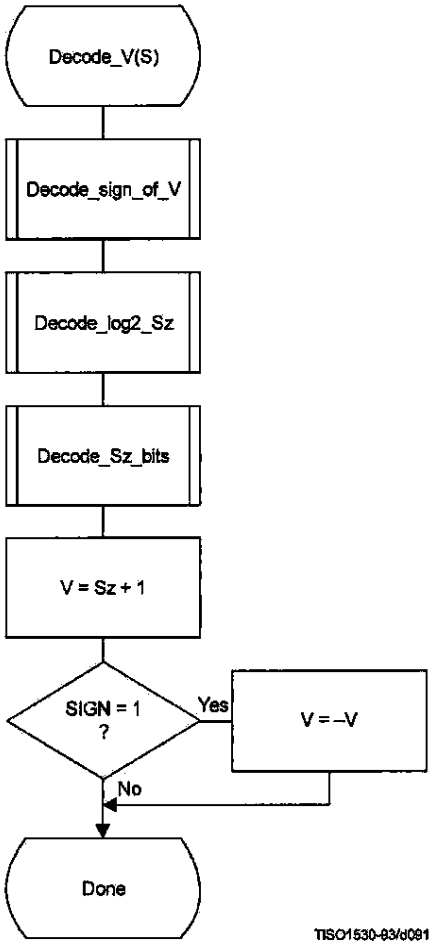

Figure F.21 – Sequence of procedures in decoding non-zero values of V

JA481
CONFIDENTIAL BUSINESS INFORMATION PHLPSKD_00047540

F.2.4.3.1.1 Decoding the sign

The sign is decoded by the procedure shown in Figure F.22.

The context-indices are defined for DC decoding in Table F.4 and AC decoding in Table F.5.

If SIGN = 0, the sign of the coefficient is positive; if SIGN = 1, the sign of the coefficient is negative.

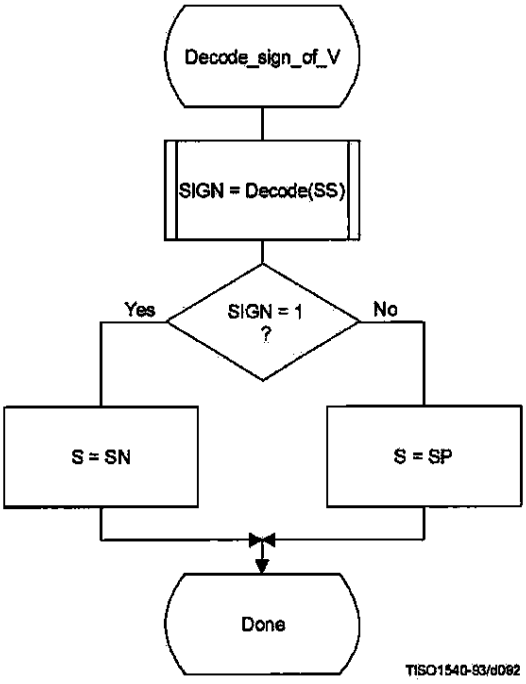

Figure F.22 – Decoding the sign of V

F.2.4.3.1.2 Decoding the magnitude category

The context-index S is set in Decode_sign_of_V and the context-index values X1 and X2 are defined for DC coding in Table F.4 and for AC coding in Table F.5.

In Figure F.23, M is set to the upper bound for the magnitude and shifted left until the decoded decision is zero. It is then shifted right by 1 to become the leading bit of the magnitude of Sz.

JA482
CONFIDENTIAL BUSINESS INFORMATION PHLPSKD_00047541

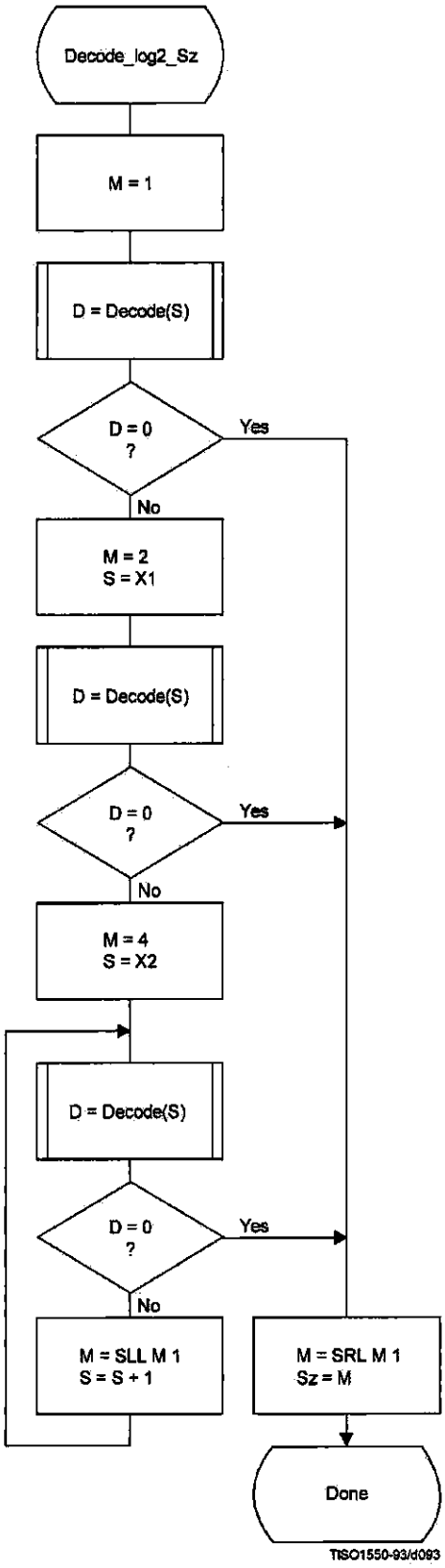

Figure F.23 – Decoding procedure to establish the magnitude category

F.2.4.3.1.3 Decoding the exact value of the magnitude

After the magnitude category is decoded, the low order magnitude bits are decoded. These bits are decoded in order of decreasing bit significance. The procedure is shown in Figure F.24.

The context-index S is set in Decode_log2_Sz.

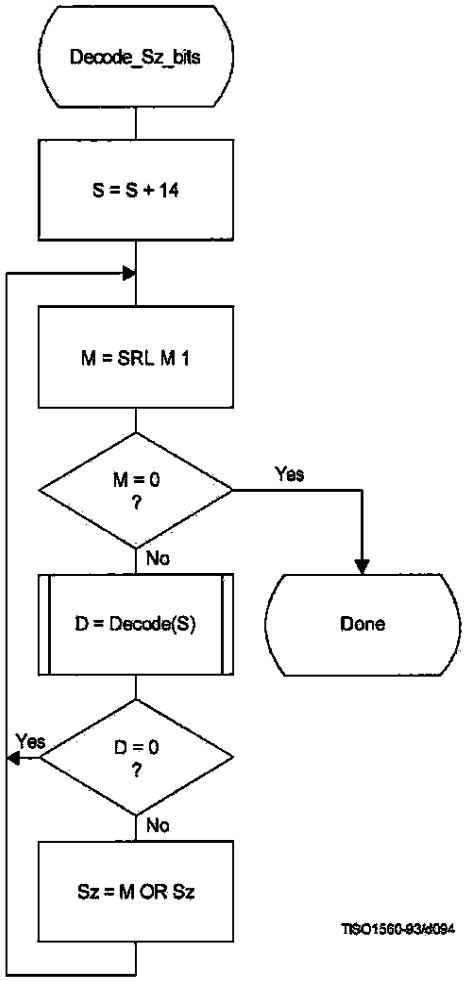

Figure F.24 – Decision sequence to decode the magnitude bit pattern

F.2.4.4 Decoder restart

The RST_m markers which are added to the compressed data between each restart interval have a two byte value which cannot be generated by the coding procedures. These two byte sequences can be located without decoding, and can therefore be used to resynchronize the decoder. RST_m markers can therefore be used for error recovery.

JA484
CONFIDENTIAL BUSINESS INFORMATION PHLPSKD_00047543

Before error recovery procedures can be invoked, the error condition must first be detected. Errors during decoding can show up in two places:

a) The decoder fails to find the expected marker at the point where it is expecting resynchronization.

b) Physically impossible data are decoded. For example, decoding a magnitude beyond the range of values allowed by the model is quite likely when the compressed data are corrupted by errors. For arithmetic decoders this error condition is extremely important to detect, as otherwise the decoder may reach a condition where it uses the compressed data very slowly.

NOTE – Some errors will not cause the decoder to lose synchronization. In addition, recovery is not possible for all errors; for example, errors in the headers are likely to be catastrophic. The two error conditions listed above, however, almost always cause the decoder to lose synchronization in a way which permits recovery.

In regaining synchronization, the decoder can make use of the modulo 8 coding restart interval number in the low order bits of the RST_m marker. By comparing the expected restart interval number to the value in the next RST_m marker in the compressed image data, the decoder can usually recover synchronization. It then fills in missing lines in the output data by replication or some other suitable procedure, and continues decoding. Of course, the reconstructed image will usually be highly corrupted for at least a part of the restart interval where the error occurred.

F.2.5 Sequential DCT decoding process with Huffman coding and 12-bit precision

This process is identical to the sequential DCT process defined for 8-bit sample precision and extended to four Huffman tables, as documented in F.2.3, but with the following changes.

F.2.5.1 Structure of DC Huffman decode table

The general structure of the DC Huffman decode table is extended as described in F.1.5.1.

F.2.5.2 Structure of AC Huffman decode table

The general structure of the AC Huffman decode table is extended as described in F.1.5.2.

F.2.6 Sequential DCT decoding process with arithmetic coding and 12-bit precision

The process is identical to the sequential DCT process for 8-bit precision except for changes in the precision of the IDCT computation.

The structure of the decoding procedure in F.2.4 is already defined for a 12-bit input precision.

CONFIDENTIAL BUSINESS INFORMATION PHLPSKD_00047544

Annex G

Progressive DCT-based mode of operation

(This annex forms an integral part of this Recommendation | International Standard)

This annex provides a **functional specification** of the following coding processes for the progressive DCT-based mode of operation:

1) spectral selection only, Huffman coding, 8-bit sample precision;
2) spectral selection only, arithmetic coding, 8-bit sample precision;
3) full progression, Huffman coding, 8-bit sample precision;
4) full progression, arithmetic coding, 8-bit sample precision;
5) spectral selection only, Huffman coding, 12-bit sample precision;
6) spectral selection only, arithmetic coding, 12-bit sample precision;
7) full progression, Huffman coding, 12-bit sample precision;
8) full progression, arithmetic coding, 12-bit sample precision.

For each of these, the encoding process is specified in G.1, and the decoding process is specified in G.2. The functional specification is presented by means of specific flow charts for the various procedures which comprise these coding processes.

NOTE – There is **no requirement** in this Specification that any encoder or decoder which embodies one of the above-named processes shall implement the procedures in precisely the manner specified by the flow charts in this annex. It is necessary only that an encoder or decoder implement the **function** specified in this annex. The sole criterion for an encoder or decoder to be considered in compliance with this Specification is that it satisfy the requirements given in clause 6 (for encoders) or clause 7 (for decoders), as determined by the compliance tests specified in Part 2.

The number of Huffman or arithmetic conditioning tables which may be used within the same scan is four.

Two complementary progressive procedures are defined, spectral selection and successive approximation.

In spectral selection the DCT coefficients of each block are segmented into frequency bands. The bands are coded in separate scans.

In successive approximation the DCT coefficients are divided by a power of two before coding. In the decoder the coefficients are multiplied by that same power of two before computing the IDCT. In the succeeding scans the precision of the coefficients is increased by one bit in each scan until full precision is reached.

An encoder or decoder implementing a full progression uses spectral selection within successive approximation. An allowed subset is spectral selection alone.

Figure G.1 illustrates the spectral selection and successive approximation progressive processes.

G.1 Progressive DCT-based encoding processes

G.1.1 Control procedures and coding models for progressive DCT-based procedures

G.1.1.1 Control procedures for progressive DCT-based encoders

The control procedures for encoding an image and its constituent parts – the frame, scan, restart interval and MCU – are given in Figures E.1 through E.5.

The control structure for encoding a frame is the same as for the sequential procedures. However, it is convenient to calculate the FDCT for the entire set of components in a frame before starting the scans. A buffer which is large enough to store all of the DCT coefficients may be used for this progressive mode of operation.

The number of scans is determined by the progression defined; the number of scans may be much larger than the number of components in the frame.

JA486
CONFIDENTIAL BUSINESS INFORMATION PHLPSKD_00047545

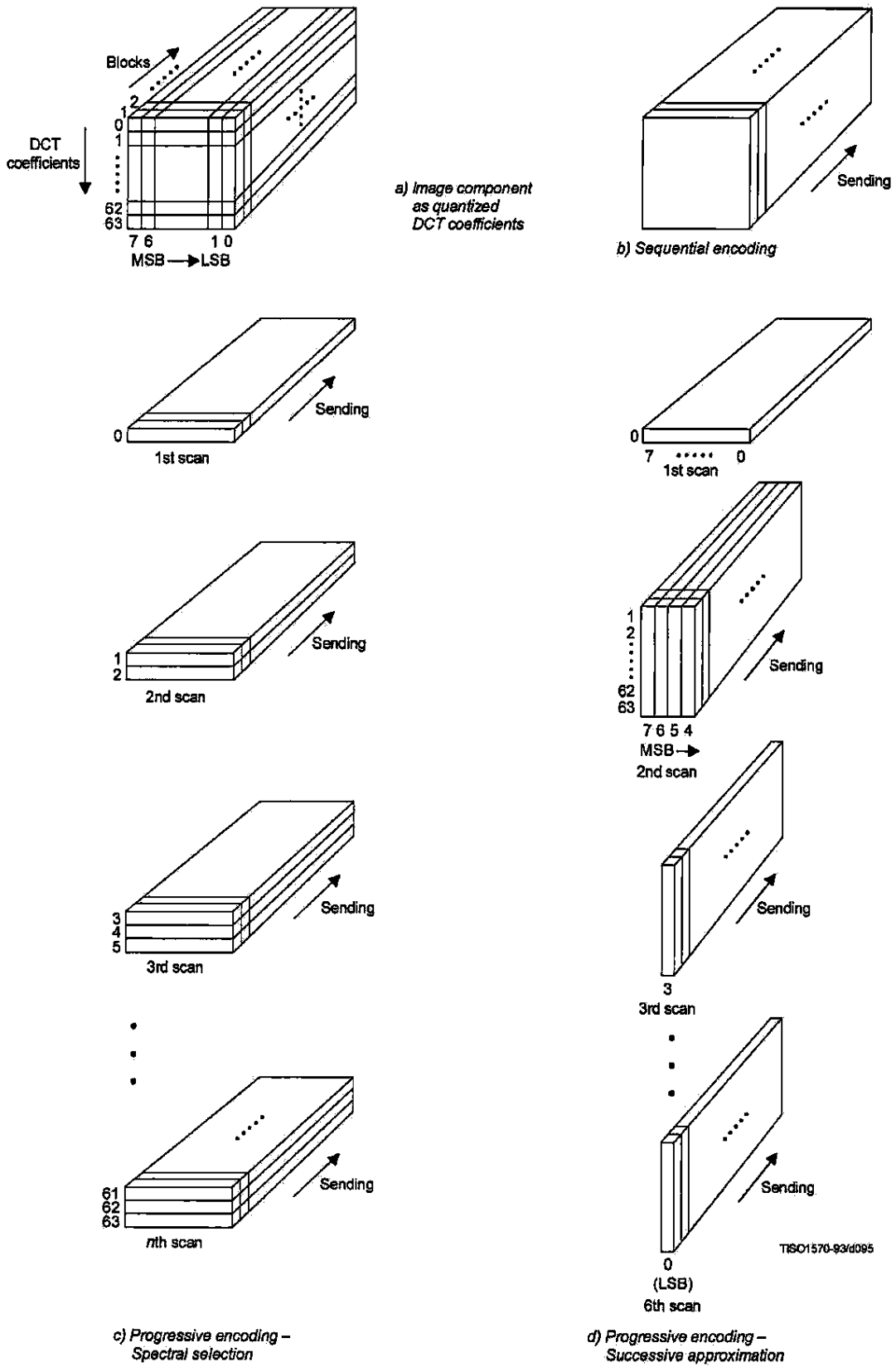

Figure G.1 – Spectral selection and successive approximation progressive processes

The procedure for encoding a MCU (see Figure E.5) repetitively invokes the procedure for coding a data unit. For DCT-based encoders the data unit is an 8 × 8 block of samples.

Only a portion of each 8 × 8 block is coded in each scan, the portion being determined by the scan header parameters Ss, Se, Ah, and Al (see B.2.3). The procedures used to code portions of each 8 × 8 block are described in this annex. Note, however, that where these procedures are identical to those used in the sequential DCT-based mode of operation, the sequential procedures are simply referenced.

G.1.1.1.1 Spectral selection control

In spectral selection the zig-zag sequence of DCT coefficients is segmented into bands. A band is defined in the scan header by specifying the starting and ending indices in the zig-zag sequence. One band is coded in a given scan of the progression. DC coefficients are always coded separately from AC coefficients, and only scans which code DC coefficients may have interleaved blocks from more than one component. All other scans shall have only one component. With the exception of the first DC scans for the components, the sequence of bands defined in the scans need not follow the zig-zag ordering. For each component, a first DC scan shall precede any AC scans.

G.1.1.1.2 Successive approximation control

If successive approximation is used, the DCT coefficients are reduced in precision by the point transform (see A.4) defined in the scan header (see B.2.3). The successive approximation bit position parameter Al specifies the actual point transform, and the high four bits (Ah) – if there are preceding scans for the band – contain the value of the point transform used in those preceding scans. If there are no preceding scans for the band, Ah is zero.

Each scan which follows the first scan for a given band progressively improves the precision of the coefficients by one bit, until full precision is reached.

G.1.1.2 Coding models for progressive DCT-based encoders

If successive approximation is used, the DCT coefficients are reduced in precision by the point transform (see A.4) defined in the scan header (see B.2.3). These models also apply to the progressive DCT-based encoders, but with the following changes.

G.1.1.2.1 Progressive encoding model for DC coefficients

If Al is not zero, the point transform for DC coefficients shall be used to reduce the precision of the DC coefficients. If Ah is zero, the coefficient values (as modified by the point transform) shall be coded, using the procedure described in Annex F. If Ah is not zero, the least significant bit of the point transformed DC coefficients shall be coded, using the procedures described in this annex.

G.1.1.2.2 Progressive encoding model for AC coefficients

If Al is not zero, the point transform for AC coefficients shall be used to reduce the precision of the AC coefficients. If Ah is zero, the coefficient values (as modified by the point transform) shall be coded using modifications of the procedures described in Annex F. These modifications are described in this annex. If Ah is not zero, the precision of the coefficients shall be improved using the procedures described in this annex.

G.1.2 Progressive encoding procedures with Huffman coding

G.1.2.1 Progressive encoding of DC coefficients with Huffman coding

The first scan for a given component shall encode the DC coefficient values using the procedures described in F.1.2.1. If the successive approximation bit position parameter Al is not zero, the coefficient values shall be reduced in precision by the point transform described in Annex A before coding.

In subsequent scans using successive approximation the least significant bits are appended to the compressed bit stream without compression or modification (see G.1.2.3), except for byte stuffing.

G.1.2.2 Progressive encoding of AC coefficients with Huffman coding

In spectral selection and in the first scan of successive approximation for a component, the AC coefficient coding model is similar to that used by the sequential procedures. However, the Huffman code tables are extended to include coding of runs of End-Of-Bands (EOBs). See Table G.1.

JA488
CONFIDENTIAL BUSINESS INFORMATION PHLPSKD_00047547

Table G.1 – EOBn code run length extensions

EOBn code	Run length
EOB0	1
EOB1	2,3
EOB2	4..7
EOB3	8..15
EOB4	16..31
EOB5	32..63
EOB6	64..127
EOB7	128..255
EOB8	256..511
EOB9	512..1 023
EOB10	1 024..2 047
EOB11	2 048..4 095
EOB12	4 096..8 191
EOB13	8 192..16 383
EOB14	16 384..32 767

The end-of-band run structure allows efficient coding of blocks which have only zero coefficients. An EOB run of length 5 means that the current block and the next four blocks have an end-of-band with no intervening non-zero coefficients. The EOB run length is limited only by the restart interval.

The extension of the code table is illustrated in Figure G.2.

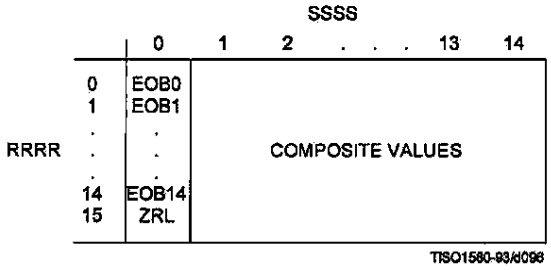

Figure G.2 – Two-dimensional value array for Huffman coding

The EOBn code sequence is defined as follows. Each EOBn code is followed by an extension field similar to the extension field for the coefficient amplitudes (but with positive numbers only). The number of bits appended to the EOBn code is the minimum number required to specify the run length.

If an EOB run is greater than 32 767, it is coded as a sequence of EOB runs of length 32 767 followed by a final EOB run sufficient to complete the run.

At the beginning of each restart interval the EOB run count, EOBRUN, is set to zero. At the end of each restart interval any remaining EOB run is coded.

The Huffman encoding procedure for AC coefficients in spectral selection and in the first scan of successive approximation is illustrated in Figures G.3, G.4, G.5, and G.6.

JA489
CONFIDENTIAL BUSINESS INFORMATION PHLPSKD_00047548

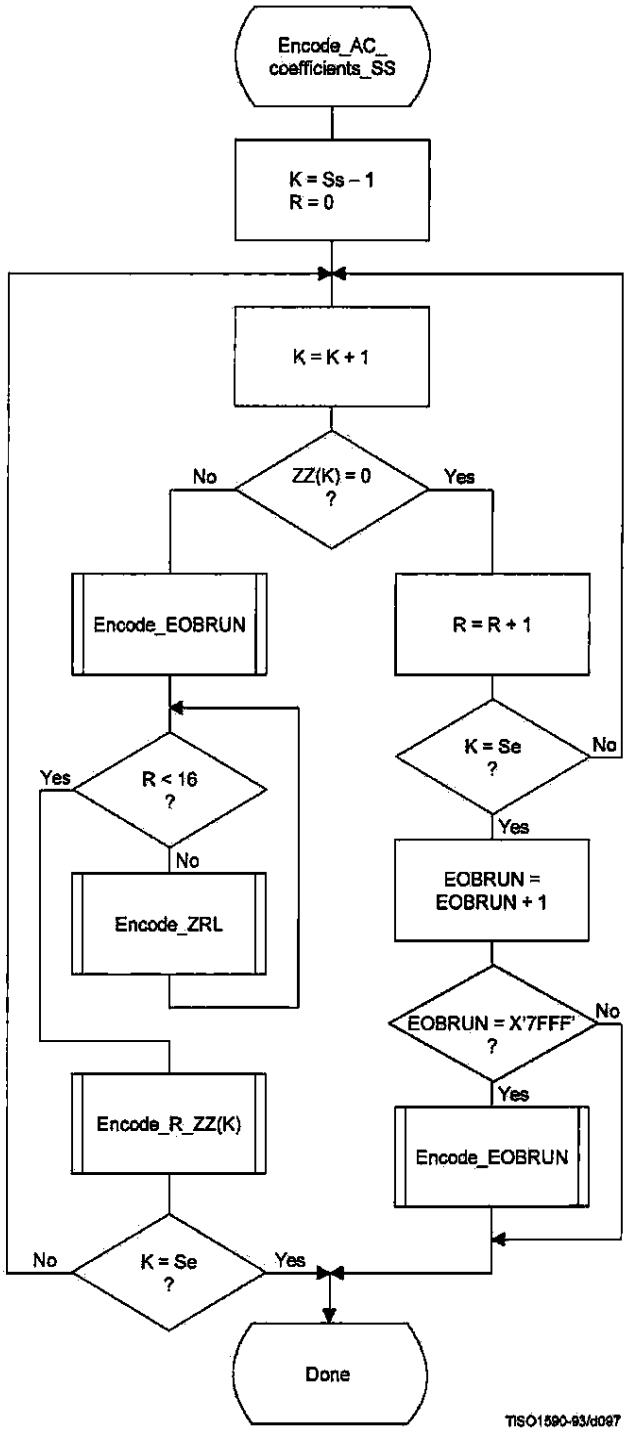

Figure G.3 – Procedure for progressive encoding of AC coefficients with Huffman coding

JA490
CONFIDENTIAL BUSINESS INFORMATION PHLPSKD_00047549

In Figure G.3, Ss is the start of spectral selection, Se is the end of spectral selection, K is the index into the list of coefficients stored in the zig-zag sequence ZZ, R is the run length of zero coefficients, and EOBRUN is the run length of EOBs. EOBRUN is set to zero at the start of each restart interval.

If the scan header parameter Al (successive approximation bit position low) is not zero, the DCT coefficient values ZZ(K) in Figure G.3 and figures which follow in this annex, including those in the arithmetic coding section, shall be replaced by the point transformed values ZZ'(K), where ZZ'(K) is defined by:

$$ZZ'(K) = \frac{ZZ(K)x}{2^{Al}}$$

EOBSIZE is a procedure which returns the size of the EOB extension field given the EOB run length as input. CSIZE is a procedure which maps an AC coefficient to the SSSS value defined in the subclauses on sequential encoding (see F.1.1 and F.1.3).

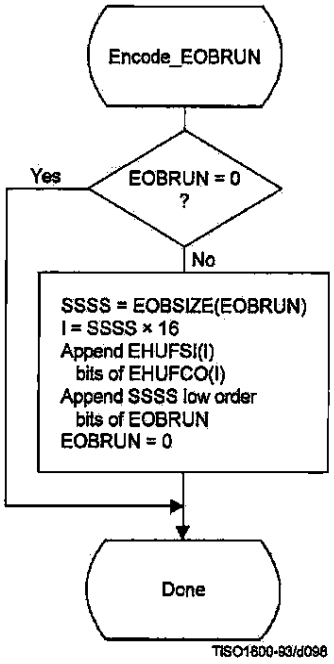

Figure G.4 – Progressive encoding of a non-zero AC coefficient

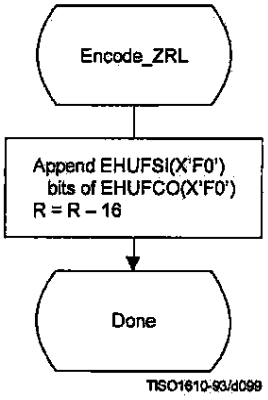

Figure G.5 – Encoding of the run of zero coefficients

JA491
CONFIDENTIAL BUSINESS INFORMATION PHLPSKD_00047550

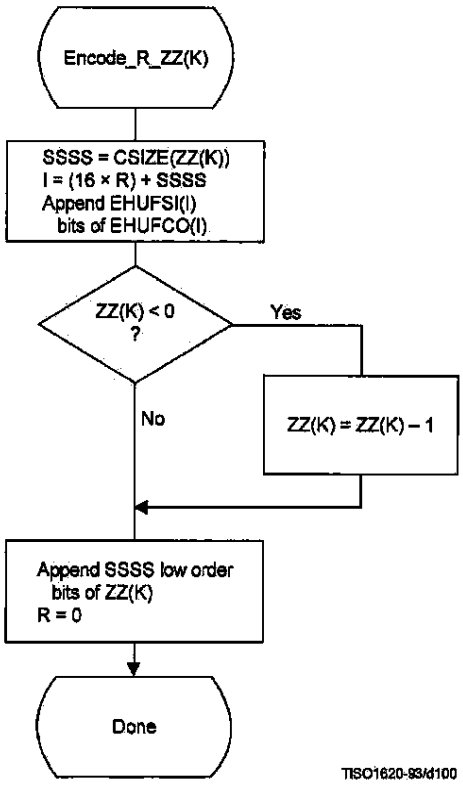

Figure G.6 – Encoding of the zero run and non-zero coefficient

G.1.2.3 Coding model for subsequent scans of successive approximation

The Huffman coding structure of the subsequent scans of successive approximation for a given component is similar to the coding structure of the first scan of that component.

The structure of the AC code table is identical to the structure described in G.1.2.2. Each non-zero point transformed coefficient that has a zero history (i.e. that has a value ± 1, and therefore has not been coded in a previous scan) is defined by a composite 8-bit run length-magnitude value of the form:

RRRRSSSS

The four most significant bits, RRRR, give the number of zero coefficients that are between the current coefficient and the previously coded coefficient (or the start of band). Coefficients with non-zero history (a non-zero value coded in a previous scan) are skipped over when counting the zero coefficients. The four least significant bits, SSSS, provide the magnitude category of the non-zero coefficient; for a given component the value of SSSS can only be one.

The run length-magnitude composite value is Huffman coded and each Huffman code is followed by additional bits:

a) One bit codes the sign of the newly non-zero coefficient. A 0-bit codes a negative sign; a 1-bit codes a positive sign.

b) For each coefficient with a non-zero history, one bit is used to code the correction. A 0-bit means no correction and a 1-bit means that one shall be added to the (scaled) decoded magnitude of the coefficient.

JA492
CONFIDENTIAL BUSINESS INFORMATION PHLPSKD_00047551

Non-zero coefficients with zero history are coded with a composite code of the form:

HUFFCO(RRRRSSSS) + additional bit (rule a) + correction bits (rule b)

In addition whenever zero runs are coded with ZRL or EOBn codes, correction bits for those coefficients with non-zero history contained within the zero run are appended according to rule b above.

For the Huffman coding version of Encode_AC_Coefficients_SA the EOB is defined to be the position of the last point transformed coefficient of magnitude 1 in the band. If there are no coefficients of magnitude 1, the EOB is defined to be zero.

NOTE – The definition of EOB is different for Huffman and arithmetic coding procedures.

In Figures G.7 and G.8 BE is the count of buffered correction bits at the start of coding of the block. BE is initialized to zero at the start of each restart interval. At the end of each restart interval any remaining buffered bits are appended to the bit stream following the last EOBn Huffman code and associated appended bits.

In Figures G.7 and G.9, BR is the count of buffered correction bits which are appended to the bit stream according to rule b. BR is set to zero at the beginning of each Encode_AC_Coefficients_SA. At the end of each restart interval any remaining buffered bits are appended to the bit stream following the last Huffman code and associated appended bits.

G.1.3 Progressive encoding procedures with arithmetic coding

G.1.3.1 Progressive encoding of DC coefficients with arithmetic coding

The first scan for a given component shall encode the DC coefficient values using the procedures described in F.1.4.1. If the successive approximation bit position parameter is not zero, the coefficient values shall be reduced in precision by the point transform described in Annex A before coding.

In subsequent scans using successive approximation the least significant bits shall be coded as binary decisions using a fixed probability estimate of 0.5 (Qe = X'5A1D', MPS = 0).

G.1.3.2 Progressive encoding of AC coefficients with arithmetic coding

Except for the point transform scaling of the DCT coefficients and the grouping of the coefficients into bands, the first scan(s) of successive approximation is identical to the sequential encoding procedure described in F.1.4. If Kmin is equated to Ss, the index of the first AC coefficient index in the band, the flow chart shown in Figure F.5 applies. The EOB decision in that figure refers to the "end-of-band" rather than the "end-of-block". For the arithmetic coding version of Encode_AC_Coefficients_SA (and all other AC coefficient coding procedures) the EOB is defined to be the position following the last non-zero coefficient in the band.

NOTE - The definition of EOB is different for Huffman and arithmetic coding procedures.

The statistical model described in F.1.4 also holds. For this model the default value of Kx is 5. Other values of Kx may be specified using the DAC marker code (Annex B). The following calculation for Kx has proven to give good results for 8-bit precision samples:

$$Kx = Kmin + SRL\ (8 + Se - Kmin)\ 4$$

This expression reduces to the default of Kx = 5 when the band is from index 1 to index 63.

JA493
CONFIDENTIAL BUSINESS INFORMATION PHLPSKD_00047552

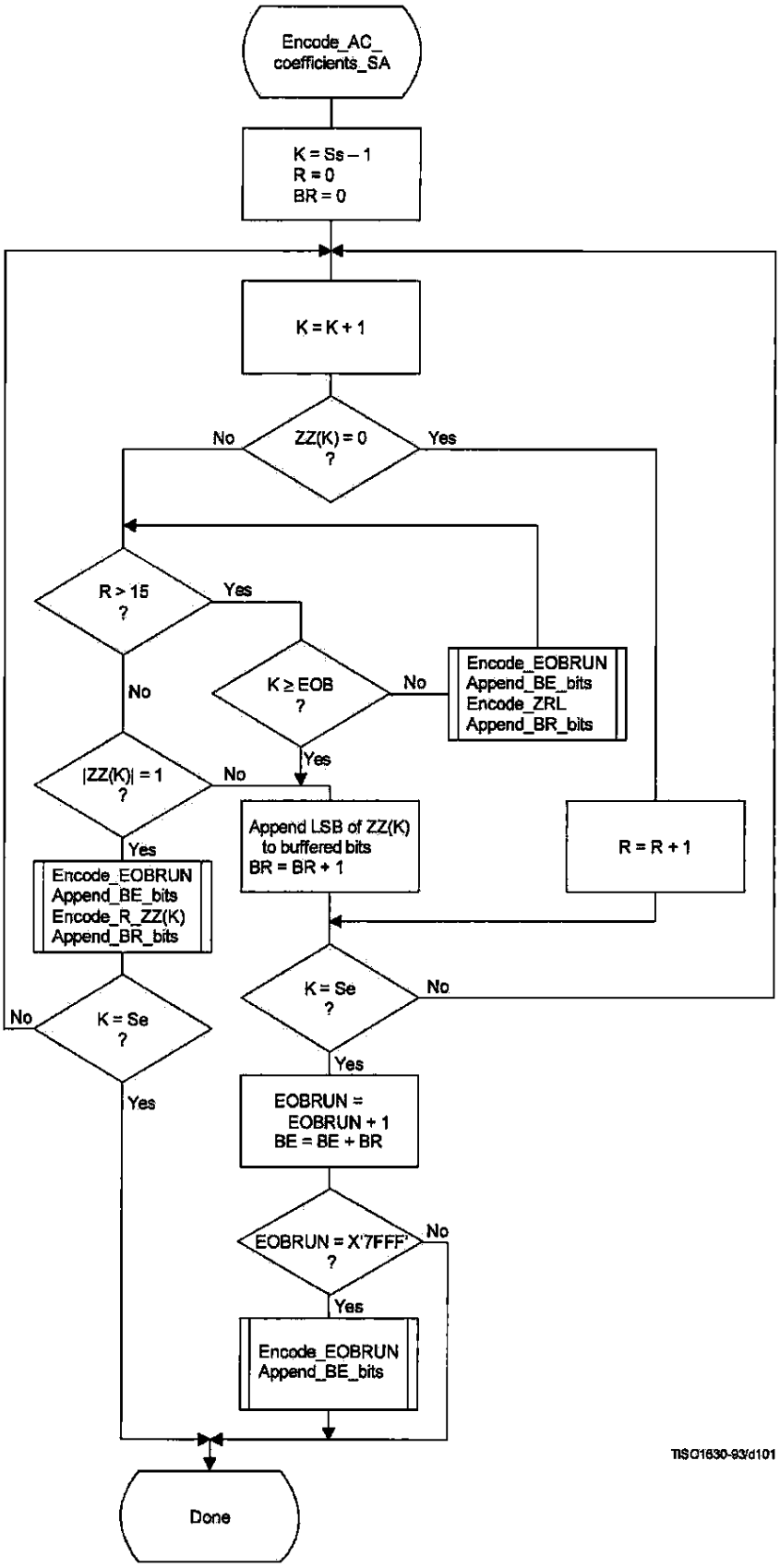

Figure G.7 – Successive approximation coding of AC coefficients using Huffman coding

JA494
CONFIDENTIAL BUSINESS INFORMATION PHLPSKD_00047553

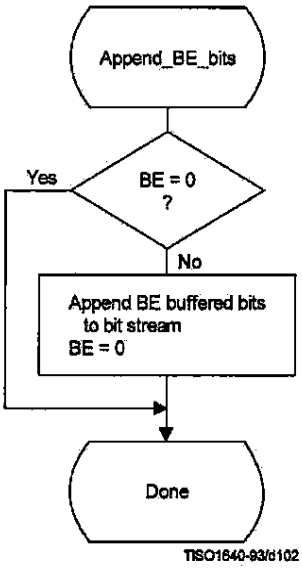

Figure G.8 – Transferring BE buffered bits from buffer to bit stream

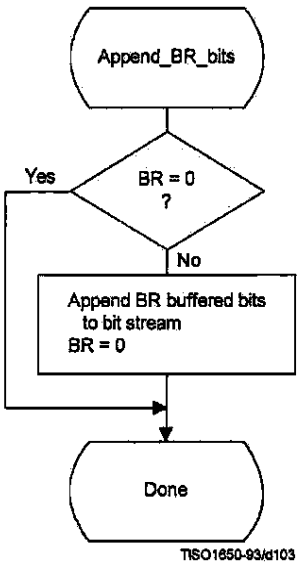

Figure G.9 – Transferring BR buffered bits from buffer to bit stream

CONFIDENTIAL BUSINESS INFORMATION PHLPSKD_00047554

G.1.3.3 Coding model for subsequent scans of successive approximation

The procedure "Encode_AC_Coefficient_SA" shown in Figure G.10 increases the precision of the AC coefficient values in the band by one bit.

As in the first scan of successive approximation for a component, an EOB decision is coded at the start of the band and after each non-zero coefficient.

However, since the end-of-band index of the previous successive approximation scan for a given component, EOBx, is known from the data coded in the prior scan of that component, this decision is bypassed whenever the current index, K, is less than EOBx. As in the first scan(s), the EOB decision is also bypassed whenever the last coefficient in the band is not zero. The decision ZZ(K) = 0 decodes runs of zero coefficients. If the decoder is at this step of the procedure, at least one non-zero coefficient remains in the band of the block being coded. If ZZ(K) is not zero, the procedure in Figure G.11 is followed to code the value.

The context-indices in Figures G.10 and G.11 are defined in Table G.2 (see G.1.3.3.1). The signs of coefficients with magnitude of one are coded with a fixed probability value of approximately 0.5 (Qe = X'5A1D', MPS = 0).

G.1.3.3.1 Statistical model for subsequent successive approximation scans

As shown in Table G.2, each statistics area for subsequent successive approximation scans of AC coefficients consists of a contiguous set of 189 statistics bins. The signs of coefficients with magnitude of one are coded with a fixed probability value of approximately 0.5 (Qe = X'5A1D', MPS = 0).

G.2 Progressive decoding of the DCT

The description of the computation of the IDCT and the dequantization procedure contained in A.3.3 and A.3.4 apply to the progressive operation.

Progressive decoding processes must be able to decompress compressed image data which requires up to four sets of Huffman or arithmetic coder conditioning tables within a scan.

In order to avoid repetition, detailed flow diagrams of progressive decoder operation are not included. Decoder operation is defined by reversing the function of each step described in the encoder flow charts, and performing the steps in reverse order.

CONFIDENTIAL BUSINESS INFORMATION PHLPSKD_00047555

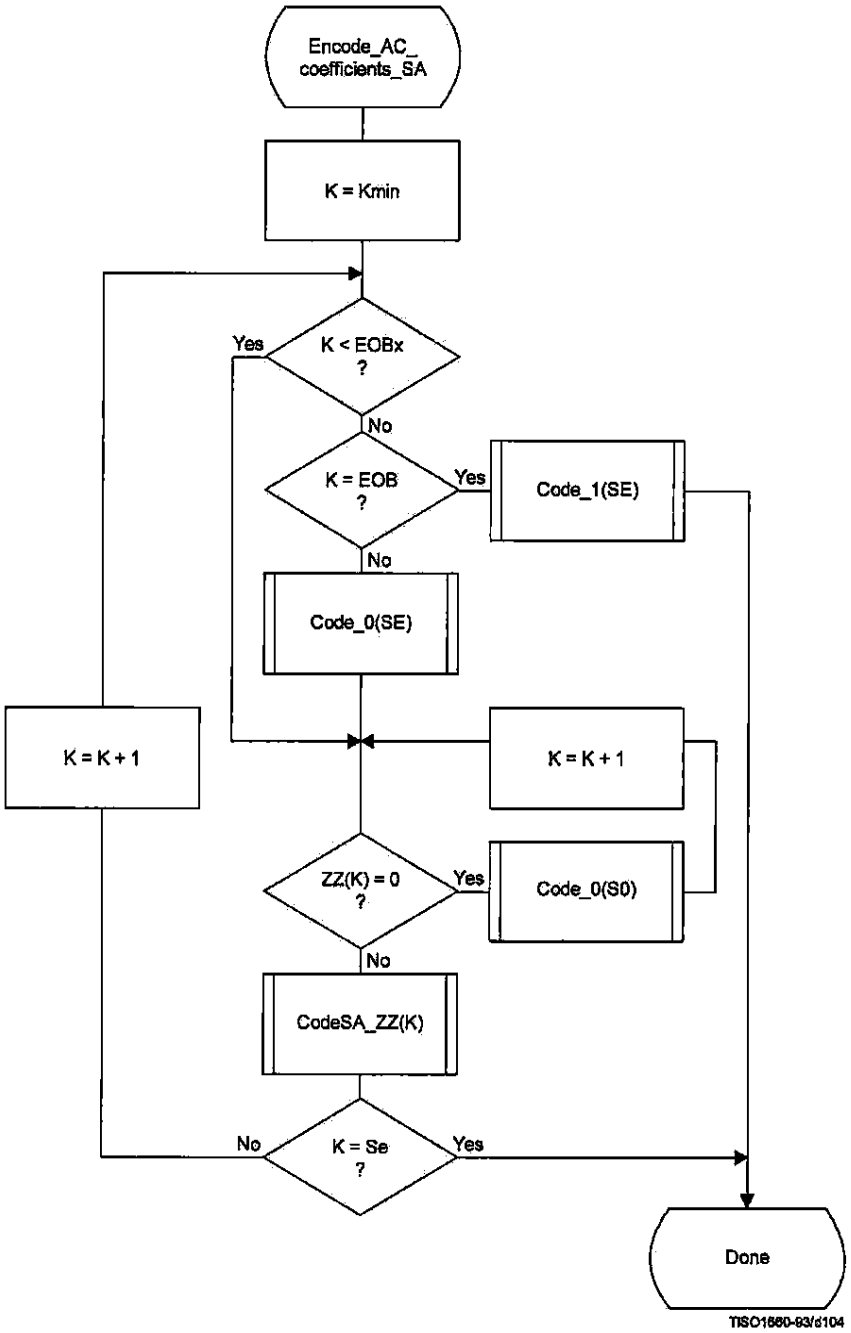

Figure G.10 – Subsequent successive approximation scans for coding of AC coefficients using arithmetic coding

CONFIDENTIAL BUSINESS INFORMATION PHLPSKD_00047556

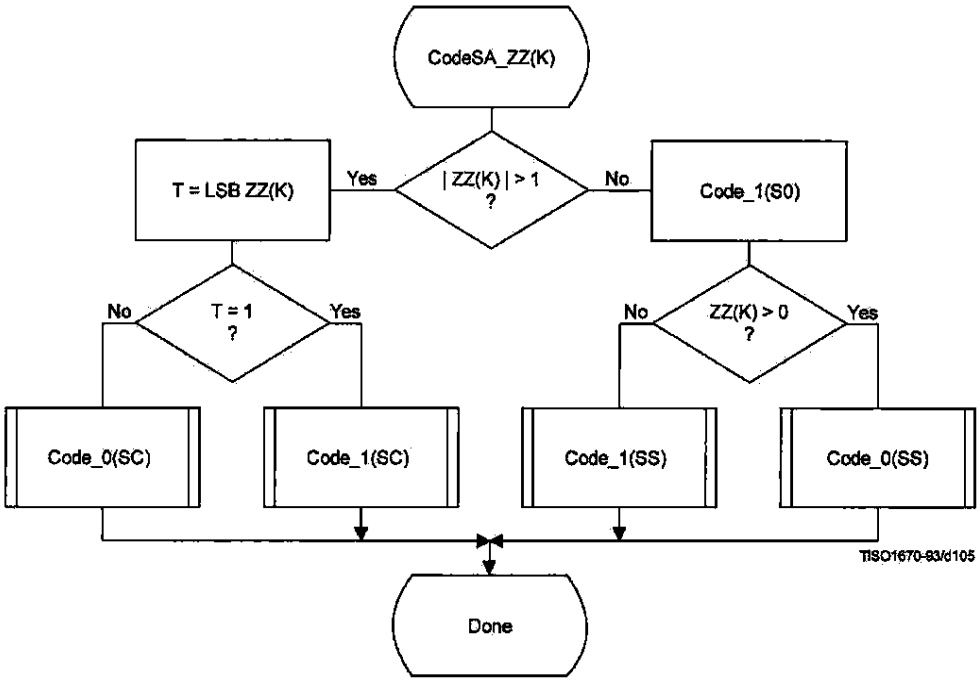

Figure G.11 – Coding non-zero coefficients for subsequent successive approximation scans

Table G.2 – Statistical model for subsequent scans of successive approximation coding of AC coefficient

Context-index	AC coding	Coding decision
SE	3 × (K–1)	K = EOB
S0	SE + 1	V = 0
SS	Fixed estimate	Sign
SC	S0 + 1	LSB ZZ(K) = 1

JA498
CONFIDENTIAL BUSINESS INFORMATION PHLPSKD_00047557

Annex H

Lossless mode of operation

(This annex forms an integral part of this Recommendation | International Standard)

This annex provides a **functional specification** of the following coding processes for the lossless mode of operation:

1) lossless processes with Huffman coding;

2) lossless processes with arithmetic coding.

For each of these, the encoding process is specified in H.1, and the decoding process is specified in H.2. The functional specification is presented by means of specific procedures which comprise these coding processes.

NOTE – There is **no requirement** in this Specification that any encoder or decoder which embodies one of the above-named processes shall implement the procedures in precisely the manner specified in this annex. It is necessary only that an encoder or decoder implement the **function** specified in this annex. The sole criterion for an encoder or decoder to be considered in compliance with this Specification is that it satisfy the requirements given in clause 6 (for encoders) or clause 7 (for decoders), as determined by the compliance tests specified in Part 2.

The processes which provide for sequential lossless encoding and decoding are not based on the DCT. The processes used are spatial processes based on the coding model developed for the DC coefficients of the DCT. However, the model is extended by incorporating a set of selectable one- and two-dimensional predictors, and for interleaved data the ordering of samples for the one-dimensional predictor can be different from that used in the DCT-based processes.

Either Huffman coding or arithmetic coding entropy coding may be employed for these lossless encoding and decoding processes. The Huffman code table structure is extended to allow up to 16-bit precision for the input data. The arithmetic coder statistical model is extended to a two-dimensional form.

H.1 Lossless encoder processes

H.1.1 Lossless encoder control procedures

Subclause E.1 contains the encoder control procedures. In applying these procedures to the lossless encoder, the data unit is one sample.

Input data precision may be from 2 to 16 bits/sample. If the input data path has different precision from the input data, the data shall be aligned with the least significant bits of the input data path. Input data is represented as unsigned integers and is not level shifted prior to coding.

When the encoder is reset in the restart interval control procedure (see E.1.4), the prediction is reset to a default value. If arithmetic coding is used, the statistics are also reset.

For the lossless processes the restart interval shall be an integer multiple of the number of MCU in an MCU-row.

H.1.2 Coding model for lossless encoding

The coding model developed for encoding the DC coefficients of the DCT is extended to allow a selection from a set of seven one-dimensional and two-dimensional predictors. The predictor is selected in the scan header (see Annex B). The same predictor is used for all components of the scan. Each component in the scan is modeled independently, using predictions derived from neighbouring samples of that component.

H.1.2.1 Prediction

Figure H.1 shows the relationship between the positions (a, b, c) of the reconstructed neighboring samples used for prediction and the position of x, the sample being coded.

JA499
CONFIDENTIAL BUSINESS INFORMATION PHLPSKD_00047558

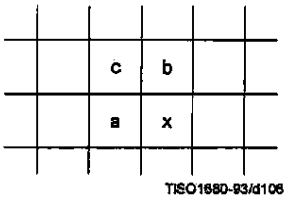

Figure H.1 – Relationship between sample and prediction samples

Define Px to be the prediction and Ra, Rb, and Rc to be the reconstructed samples immediately to the left, immediately above, and diagonally to the left of the current sample. The allowed predictors, one of which is selected in the scan header, are listed in Table H.1.

Table H.1 – Predictors for lossless coding

Selection-value	Prediction
0	No prediction (See Annex J)
1	Px = Ra
2	Px = Rb
3	Px = Rc
4	Px = Ra + Rb – Rc
5	Px = Ra + ((Rb – Rc)/2)[a]
6	Px = Rb + ((Ra – Rc)/2)[a]
7	Px = (Ra + Rb)/2

[a] Shift right arithmetic operation

Selection-value 0 shall only be used for differential coding in the hierarchical mode of operation. Selections 1, 2 and 3 are one-dimensional predictors and selections 4, 5, 6, and 7 are two-dimensional predictors.

The one-dimensional horizontal predictor (prediction sample Ra) is used for the first line of samples at the start of the scan and at the beginning of each restart interval. The selected predictor is used for all other lines. The sample from the line above (prediction sample Rb) is used at the start of each line, except for the first line. At the beginning of the first line and at the beginning of each restart interval the prediction value of 2^{P-1} is used, where P is the input precision.

If the point transformation parameter (see A.4) is non-zero, the prediction value at the beginning of the first lines and the beginning of each restart interval is 2^{P-Pt-1}, where Pt is the value of the point transformation parameter.

Each prediction is calculated with full integer arithmetic precision, and without clamping of either underflow or overflow beyond the input precision bounds. For example, if Ra and Rb are both 16-bit integers, the sum is a 17-bit integer. After dividing the sum by 2 (predictor 7), the prediction is a 16-bit integer.

JA500
CONFIDENTIAL BUSINESS INFORMATION PHLPSKD_00047559

For simplicity of implementation, the divide by 2 in the prediction selections 5 and 6 of Table H.1 is done by an arithmetic-right-shift of the integer values.

The difference between the prediction value and the input is calculated modulo 2^{16}. In the decoder the difference is decoded and added, modulo 2^{16}, to the prediction.

H.1.2.2 Huffman coding of the modulo difference

The Huffman coding procedures defined in Annex F for coding the DC coefficients are used to code the modulo 2^{16} differences. The table for DC coding contained in Tables F.1 and F.6 is extended by one additional entry. No extra bits are appended after SSSS = 16 is encoded. See Table H.2.

Table H.2 – Difference categories for lossless Huffman coding

SSSS	Difference values
0	0
1	–1,1
2	–3,–2,2,3
3	–7..–4,4..7
4	–15..–8,8..15
5	–31..–16,16..31
6	–63..–32,32..63
7	–127..–64,64..127
8	–255..–128,128..255
9	–511..–256,256..511
10	–1 023..–512,512..1 023
11	–2 047..–1 024,1 024..2 047
12	–4 095..–2 048,2 048..4 095
13	–8 191..–4 096,4 096..8 191
14	–16 383..–8 192,8 192..16 383
15	–32 767..–16 384,16 384..32 767
16	32 768

H.1.2.3 Arithmetic coding of the modulo difference

The statistical model defined for the DC coefficient arithmetic coding model (see F.1.4.4.1) is generalized to a two-dimensional form in which differences coded for the sample to the left and for the line above are used for conditioning.

H.1.2.3.1 Two-dimensional statistical model

The binary decisions are conditioned on the differences coded for the neighbouring samples immediately above and immediately to the left from the same component. As in the coding of the DC coefficients, the differences are classified into 5 categories: zero(0), small positive (+S), small negative (–S), large positive (+L), and large negative (–L). The two independent difference categories combine to give 25 different conditioning states. Figure H.2 shows the two-dimensional array of conditioning indices. For each of the 25 conditioning states probability estimates for four binary decisions are kept.

At the beginning of the scan and each restart interval the conditioning derived from the line above is set to zero for the first line of each component. At the start of each line, the difference to the left is set to zero for the purposes of calculating the conditioning.

JA501
CONFIDENTIAL BUSINESS INFORMATION PHLPSKD_00047560

Difference to left (position a) \ Difference above (position b)	0	+S	–S	+L	–L
0	0	4	8	12	16
+S	20	24	28	32	36
–S	40	44	48	52	56
+L	60	64	68	72	76
–L	80	84	88	92	96

TISO1690-93/d107

Figure H.2 – 5 × 5 Conditioning array for two-dimensional statistical model

H.1.2.3.2 Assignment of statistical bins to the DC binary decision tree

Each statistics area for lossless coding consists of a contiguous set of 158 statistics bins. The first 100 bins consist of 25 sets of four bins selected by a context-index S0. The value of S0 is given by L_Context(Da,Db), which provides a value of 0, 4,..., 92 or 96, depending on the difference classifications of Da and Db (see H.1.2.3.1). The value for S0 provided by L_Context(Da,Db) is from the array in Figure H.2.

The remaining 58 bins consist of two sets of 29 bins, X1, ..., X15, M2, ..., M15, which are used to code magnitude category decisions and magnitude bits. The value of X1 is given by X1_Context(Db), which provides a value of 100 when Db is in the zero, small positive or small negative categories and a value of 129 when Db is in the large positive or large negative categories.

The assignment of statistical bins to the binary decision tree used for coding the difference is given in Table H.3.

Table H.3 – Statistical model for lossless coding

Context-index	Value	Coding decision
S0	L_Context(Da,Db)	V = 0
SS	S0 + 1	Sign
SP	S0 + 2	Sz < 1 if V > 0
SN	S0 + 3	Sz < 1 if V < 0
X1	X1_Context(Db)	Sz < 2
X2	X1 + 1	Sz < 4
X3	X1 + 2	Sz < 8
.	.	.
.	.	.
X15	X1 + 14	$Sz < 2^{15}$
M2	X2 + 14	Magnitude bits if Sz < 4
M3	X3 + 14	Magnitude bits if Sz < 8
.	.	.
.	.	.
M15	X15 + 14	Magnitude bits if $Sz < 2^{15}$

JA502
CONFIDENTIAL BUSINESS INFORMATION PHLPSKD_00047561

H.1.2.3.3 Default conditioning bounds

The bounds, L and U, for determining the conditioning category have the default values L = 0 and U = 1. Other bounds may be set using the DAC (Define-Arithmetic-Conditioning) marker segment, as described in Annex B.

H.1.2.3.4 Initial conditions for statistical model

At the start of a scan and at each restart, all statistics bins are re-initialized to the standard default value described in Annex D.

H.2 Lossless decoder processes

Lossless decoders may employ either Huffman decoding or arithmetic decoding. They shall be capable of using up to four tables in a scan. Lossless decoders shall be able to decode encoded image source data with any input precision from 2 to 16 bits per sample.

H.2.1 Lossless decoder control procedures

Subclause E.2 contains the decoder control procedures. In applying these procedures to the lossless decoder the data unit is one sample.

When the decoder is reset in the restart interval control procedure (see E.2.4) the prediction is reset to the same value used in the encoder (see H.1.2.1). If arithmetic coding is used, the statistics are also reset.

Restrictions on the restart interval are specified in H.1.1.

H.2.2 Coding model for lossless decoding

The predictor calculations defined in H.1.2 also apply to the lossless decoder processes.

The lossless decoders, decode the differences and add them, modulo 2^{16}, to the predictions to create the output. The lossless decoders shall be able to interpret the point transform parameter, and if non-zero, multiply the output of the lossless decoder by 2^{Pt}.

In order to avoid repetition, detailed flow charts of the lossless decoding procedures are omitted.

JA503
CONFIDENTIAL BUSINESS INFORMATION PHLPSKD_00047562

Annex J

Hierarchical mode of operation

(This annex forms an integral part of this Recommendation | International Standard)

This annex provides a **functional specification** of the coding processes for the hierarchical mode of operation.

In the hierarchical mode of operation each component is encoded or decoded in a non-differential frame. Such frames may be followed by a sequence of differential frames. A non-differential frame shall be encoded or decoded using the procedures defined in Annexes F, G and H. Differential frame procedures are defined in this annex.

The coding process for a hierarchical encoding containing DCT-based processes is defined as the highest numbered process listed in Table J.1 which is used to code any non-differential DCT-based or differential DCT-based frame in the compressed image data format. The coding process for a hierarchical encoding containing only lossless processes is defined to be the process used for the non-differential frames.

Table J.1 – Coding processes for hierarchical mode

Process	Non-differential frame specification	
1	Extended sequential DCT, Huffman, 8-bit	Annex F, process 2
2	Extended sequential DCT, arithmetic, 8-bit	Annex F, process 3
3	Extended sequential DCT, Huffman, 12-bit	Annex F, process 4
4	Extended sequential DCT, arithmetic, 12-bit	Annex F, process 5
5	Spectral selection only, Huffman, 8-bit	Annex G, process 1
6	Spectral selection only, arithmetic, 8-bit	Annex G, process 2
7	Full progression, Huffman, 8-bit	Annex G, process 3
8	Full progression, arithmetic, 8-bit	Annex G, process 4
9	Spectral selection only, Huffman, 12-bit	Annex G, process 5
10	Spectral selection only, arithmetic, 12-bit	Annex G, process 6
11	Full progression, Huffman, 12-bit	Annex G, process 7
12	Full progression, arithmetic, 12-bit	Annex G, process 8
13	Lossless, Huffman, 2 through 16 bits	Annex H, process 1
14	Lossless, arithmetic, 2 through 16 bits	Annex H, process 2

Hierarchical mode syntax requires a DHP marker segment that appears before the non-differential frame or frames. It may include EXP marker segments and differential frames which shall follow the initial non-differential frame. The frame structure in hierarchical mode is identical to the frame structure in non-hierarchical mode.

Either all non-differential frames within an image shall be coded with DCT-based processes, or all non-differential frames shall be coded with lossless processes. All frames within an image must use the same entropy coding procedure, either Huffman or arithmetic, with the exception that non-differential frames coded with the baseline process may occur in the same image with frames coded with arithmetic coding processes.

If the non-differential frames use DCT-based processes, all differential frames except the final frame for a component shall use DCT-based processes. The final differential frame for each component may use a differential lossless process.

If the non-differential frames use lossless processes, all differential frames shall use differential lossless processes.

For each of the processes listed in Table J.1, the encoding processes are specified in J.1, and decoding processes are specified in J.2.

NOTE – There is **no requirement** in this Specification that any encoder or decoder which embodies one of the above-named processes shall implement the procedures in precisely the manner specified by the flow charts in this annex. It is necessary only that an encoder or decoder implement the **function** specified in this annex. The sole criterion for an encoder or decoder to be considered in compliance with this Specification is that it satisfy the requirements given in clause 6 (for encoders) or clause 7 (for decoders), as determined by the compliance tests specified in Part 2.

JA504
CONFIDENTIAL BUSINESS INFORMATION PHLPSKD_00047563

In the hierarchical mode of operation each component is encoded or decoded in a non-differential frame followed by a sequence of differential frames. A non-differential frame shall use the procedures defined in Annexes F, G, and H. Differential frame procedures are defined in this annex.

J.1 Hierarchical encoding

J.1.1 Hierarchical control procedure for encoding an image

The control structure for encoding of an image using the hierarchical mode is given in Figure J.1.

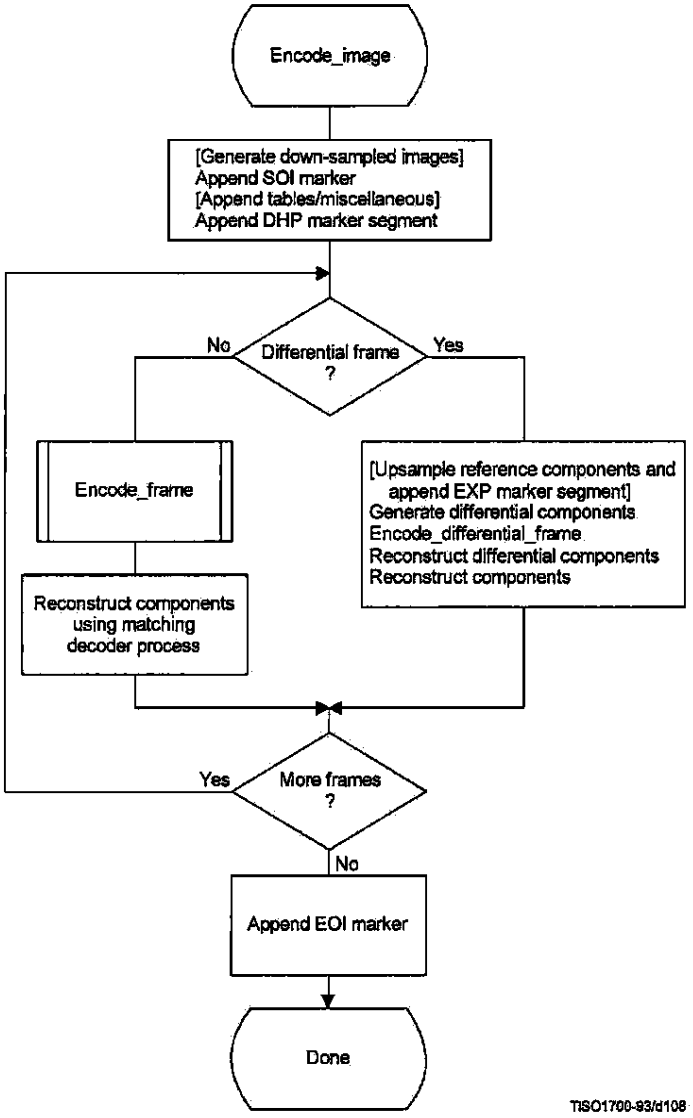

Figure J.1 – Hierarchical control procedure for encoding an image

In Figure J.1 procedures in brackets shall be performed whenever the particular hierarchical encoding sequence being followed requires them.

JA505
CONFIDENTIAL BUSINESS INFORMATION PHLPSKD_00047564

In the hierarchical mode the define-hierarchical-progression (DHP) marker segment shall be placed in the compressed image data before the first start-of-frame. The DHP segment is used to signal the size of the image components of the completed image. The syntax of the DHP segment is specified in Annex B.

The first frame for each component or group of components in a hierarchical process shall be encoded by a non-differential frame. Differential frames shall then be used to encode the two's complement differences between source input components (possibly downsampled) and the reference components (possibly upsampled). The reference components are reconstructed components created by previous frames in the hierarchical process. For either differential or non-differential frames, reconstructions of the components shall be generated if needed as reference components for a subsequent frame in the hierarchical process.

Resolution changes may occur between hierarchical frames in a hierarchical process. These changes occur if downsampling filters are used to reduce the spatial resolution of some or all of the components of the source image. When the resolution of a reference component does not match the resolution of the component input to a differential frame, an upsampling filter shall be used to increase the spatial resolution of the reference component. The EXP marker segment shall be added to the compressed image data before the start-of-frame whenever upsampling of a reference component is required. No more than one EXP marker segment shall precede a given frame.

Any of the marker segments allowed before a start-of-frame for the encoding process selected may be used before either non-differential or differential frames.

For 16-bit input precision (lossless encoder), the differential components which are input to a differential frame are calculated modulo 2^{16}. The reconstructed components calculated from the reconstructed differential components are also calculated modulo 2^{16}.

If a hierarchical encoding process uses a DCT encoding process for the first frame, all frames in the hierarchical process except for the final frame for each component shall use the DCT encoding processes defined in either Annex F or Annex G, or the modified DCT encoding processes defined in this annex. The final frame may use a modified lossless process defined in this annex.

If a hierarchical encoding process uses a lossless encoding process for the first frame, all frames in the hierarchical process shall use a lossless encoding process defined in Annex H, or a modified lossless process defined in this annex.

J.1.1.1 Downsampling filter

The downsampled components are generated using a downsampling filter that is not specified in this Specification. This filter should, however, be consistent with the upsampling filter. An example of a downsampling filter is provided in K.5.

J.1.1.2 Upsampling filter

The upsampling filter increases the spatial resolution by a factor of two horizontally, vertically, or both. Bi-linear interpolation is used for the upsampling filter, as illustrated in Figure J.2.

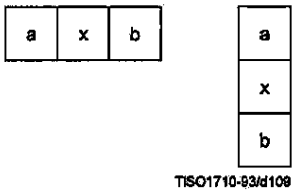

Figure J.2 – Diagram of sample positions for upsampling rules

JA506
CONFIDENTIAL BUSINESS INFORMATION PHLPSKD_00047565

The rule for calculating the interpolated value is:

$$P_x = (Ra + Rb)/2$$

where Ra and Rb are sample values from adjacent positions a and b of the lower resolution image and Px is the interpolated value. The division indicates truncation, not rounding. The left-most column of the upsampled image matches the left-most column of the lower resolution image. The top line of the upsampled image matches the top line of the lower resolution image. The right column and the bottom line of the lower resolution image are replicated to provide the values required for the right column edge and bottom line interpolations. The upsampling process always doubles the line length or the number of lines.

If both horizontal and vertical expansions are signalled, they are done in sequence – first the horizontal expansion and then the vertical.

J.1.2 Control procedure for encoding a differential frame

The control procedures in Annex E for frames, scans, restart intervals, and MCU also apply to the encoding of differential frames, and the scans, restart intervals, and MCU from which the differential frame is constructed. The differential frames differ from the frames of Annexes F, G, and H only at the coding model level.

J.1.3 Encoder coding models for differential frames

The coding models defined in Annexes F, G, and H are modified to allow them to be used for coding of two's complement differences.

J.1.3.1 Modifications to encoder DCT encoding models for differential frames

Two modifications are made to the DCT coding models to allow them to be used in differential frames. First, the FDCT of the differential input is calculated without the level shift. Second, the DC coefficient of the DCT is coded directly – without prediction.

J.1.3.2 Modifications to lossless encoding models for differential frames

One modification is made to the lossless coding models. The difference is coded directly – without prediction. The prediction selection parameter in the scan header shall be set to zero. The point transform which may be applied to the differential inputs is defined in Annex A.

J.1.4 Modifications to the entropy encoders for differential frames

The coding of two's complement differences requires one extra bit of precision for the Huffman coding of AC coefficients. The extension to Tables F.1 and F.7 is given in Table J.2.

Table J.2 – Modifications to table of AC coefficient amplitude ranges

SSSS	AC coefficients
15	–32 767..–16 384, 16 384..32 767

The arithmetic coding models are already defined for the precision needed in differential frames.

JA507
CONFIDENTIAL BUSINESS INFORMATION PHLPSKD_00047566

J.2 Hierarchical decoding

J.2.1 Hierarchical control procedure for decoding an image

The control structure for decoding an image using the hierarchical mode is given in Figure J.3.

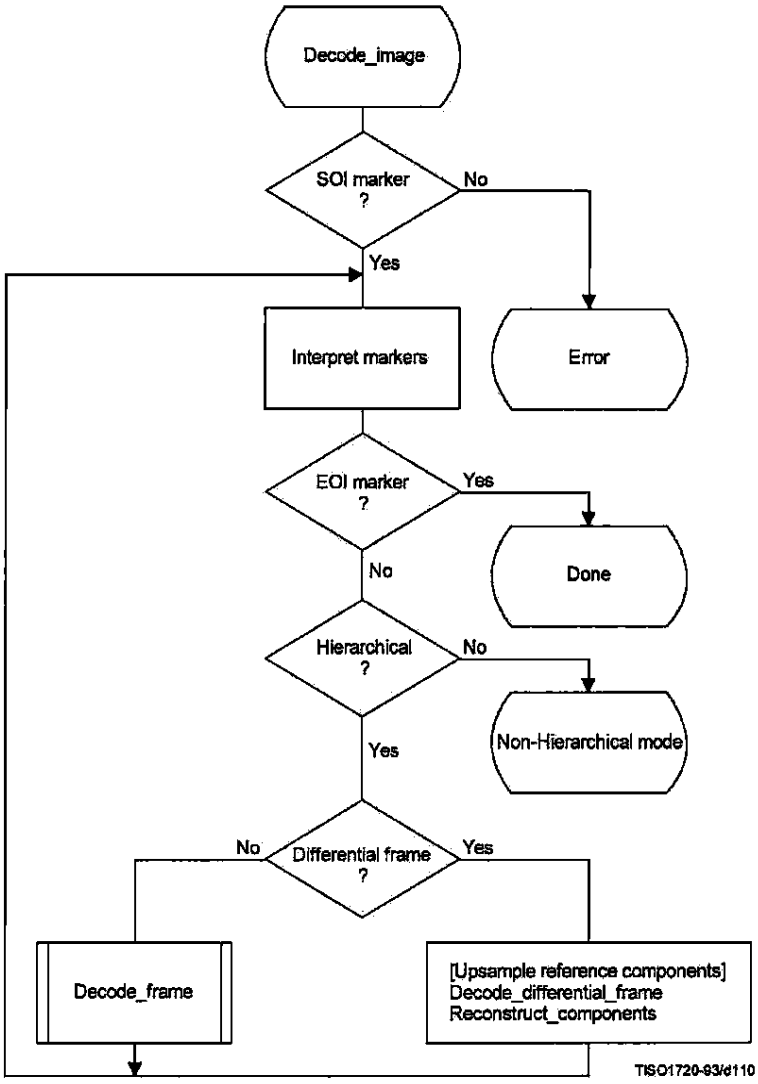

Figure J.3 – Hierarchical control procedure for decoding an image

JA508
CONFIDENTIAL BUSINESS INFORMATION PHLPSKD_00047567

The Interpret markers procedure shall decode the markers which may precede the SOF marker, continuing this decoding until either a SOF or EOI marker is found. If the DHP marker is encountered before the first frame, a flag is set which selects the hierarchical decoder at the "hierarchical?" decision point. In addition to the DHP marker (which shall precede any SOF) and the EXP marker (which shall precede any differential SOF requiring resolution changes in the reference components), any other markers which may precede a SOF shall be interpreted to the extent required for decoding of the compressed image data.

If a differential SOF marker is found, the differential frame path is followed. If the EXP was encountered in the Interpret markers procedure, the reference components for the frame shall be upsampled as required by the parameters in the EXP segment. The upsampling procedure described in J.1.1.2 shall be followed.

The Decode_differential_frame procedure generates a set of differential components. These differential components shall be added, modulo 2^{16}, to the upsampled reference components in the Reconstruct_components procedure. This creates a new set of reference components which shall be used when required in subsequent frames of the hierarchical process.

J.2.2 Control procedure for decoding a differential frame

The control procedures in Annex E for frames, scans, restart intervals, and MCU also apply to the decoding of differential frames and the scans, restart intervals, and MCU from which the differential frame is constructed. The differential frame differs from the frames of Annexes F, G, and H only at the decoder coding model level.

J.2.3 Decoder coding models for differential frames

The decoding models described in Annexes F, G, and H are modified to allow them to be used for decoding of two's complement differential components.

J.2.3.1 Modifications to the differential frame decoder DCT coding model

Two modifications are made to the decoder DCT coding models to allow them to code differential frames. First, the IDCT of the differential output is calculated without the level shift. Second, the DC coefficient of the DCT is decoded directly – without prediction.

J.2.3.2 Modifications to the differential frame decoder lossless coding model

One modification is made to the lossless decoder coding model. The difference is decoded directly – without prediction. If the point transformation parameter in the scan header is not zero, the point transform, defined in Annex A, shall be applied to the differential output.

J.2.4 Modifications to the entropy decoders for differential frames

The decoding of two's complement differences requires one extra bit of precision in the Huffman code table. This is described in J.1.4. The arithmetic coding models are already defined for the precision needed in differential frames.

JA509
CONFIDENTIAL BUSINESS INFORMATION PHLPSKD_00047568

Annex K

Examples and guidelines

(This annex does not form an integral part of this Recommendation | International Standard)

This annex provides examples of various tables, procedures, and other guidelines.

K.1 Quantization tables for luminance and chrominance components

Two examples of quantization tables are given in Tables K.1 and K.2. These are based on psychovisual thresholding and are derived empirically using luminance and chrominance and 2:1 horizontal subsampling. These tables are provided as examples only and are not necessarily suitable for any particular application. These quantization values have been used with good results on 8-bit per sample luminance and chrominance images of the format illustrated in Figure 13. Note that these quantization values are appropriate for the DCT normalization defined in A.3.3.

If these quantization values are divided by 2, the resulting reconstructed image is usually nearly indistinguishable from the source image.

Table K.1 – Luminance quantization table

16	11	10	16	24	40	51	61
12	12	14	19	26	58	60	55
14	13	16	24	40	57	69	56
14	17	22	29	51	87	80	62
18	22	37	56	68	109	103	77
24	35	55	64	81	104	113	92
49	64	78	87	103	121	120	101
72	92	95	98	112	100	103	99

Table K.2 – Chrominance quantization table

17	18	24	47	99	99	99	99
18	21	26	66	99	99	99	99
24	26	56	99	99	99	99	99
47	66	99	99	99	99	99	99
99	99	99	99	99	99	99	99
99	99	99	99	99	99	99	99
99	99	99	99	99	99	99	99
99	99	99	99	99	99	99	99

JA510
CONFIDENTIAL BUSINESS INFORMATION PHLPSKD_00047569

K.2 A procedure for generating the lists which specify a Huffman code table

A Huffman table is generated from a collection of statistics in two steps. The first step is the generation of the list of lengths and values which are in accord with the rules for generating the Huffman code tables. The second step is the generation of the Huffman code table from the list of lengths and values.

The first step, the topic of this section, is needed only for custom Huffman table generation and is done only in the encoder. In this step the statistics are used to create a table associating each value to be coded with the size (in bits) of the corresponding Huffman code. This table is sorted by code size.

A procedure for creating a Huffman table for a set of up to 256 symbols is shown in Figure K.1. Three vectors are defined for this procedure:

FREQ(V)	Frequency of occurrence of symbol V
CODESIZE(V)	Code size of symbol V
OTHERS(V)	Index to next symbol in chain of all symbols in current branch of code tree

where V goes from 0 to 256.

Before starting the procedure, the values of FREQ are collected for V = 0 to 255 and the FREQ value for V = 256 is set to 1 to reserve one code point. FREQ values for unused symbols are defined to be zero. In addition, the entries in CODESIZE are all set to 0, and the indices in OTHERS are set to –1, the value which terminates a chain of indices. Reserving one code point guarantees that no code word can ever be all "1" bits.

The search for the entry with the least value of FREQ(V) selects the largest value of V with the least value of FREQ(V) greater than zero.

The procedure "Find V1 for least value of FREQ(V1) > 0" always selects the value with the largest value of V1 when more than one V1 with the same frequency occurs. The reserved code point is then guaranteed to be in the longest code word category.

JA511
CONFIDENTIAL BUSINESS INFORMATION PHLPSKD_00047570

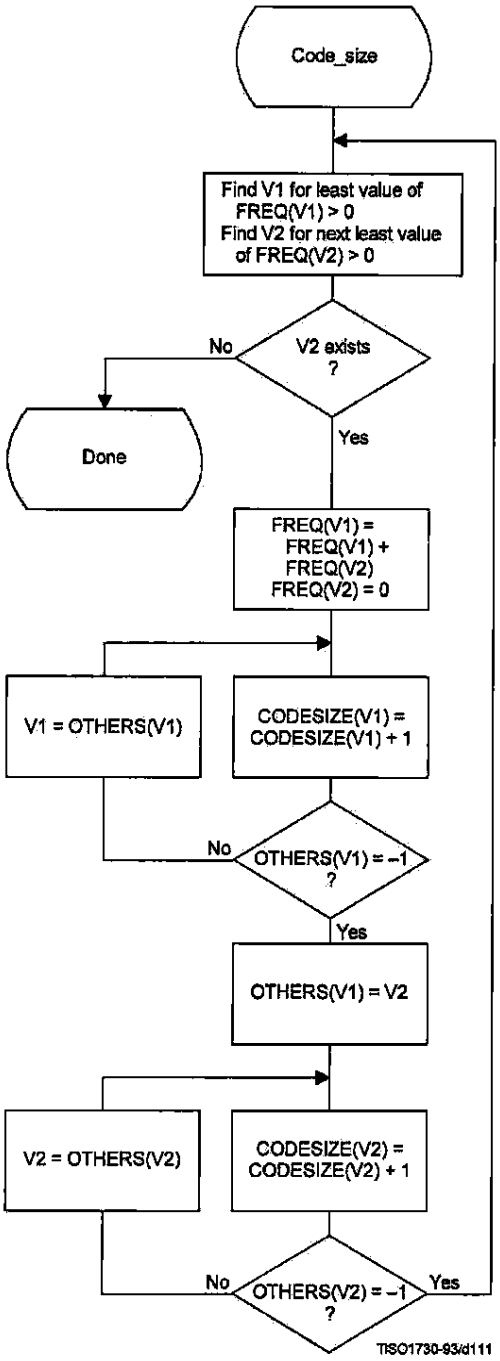

Figure K.1 – Procedure to find Huffman code sizes

JA512
CONFIDENTIAL BUSINESS INFORMATION PHLPSKD_00047571

Once the code lengths for each symbol have been obtained, the number of codes of each length is obtained using the procedure in Figure K.2. The count for each size is contained in the list, BITS. The counts in BITS are zero at the start of the procedure. The procedure assumes that the probabilities are large enough that code lengths greater than 32 bits never occur. Note that until the final Adjust_BITS procedure is complete, BITS may have more than the 16 entries required in the table specification (see Annex C).

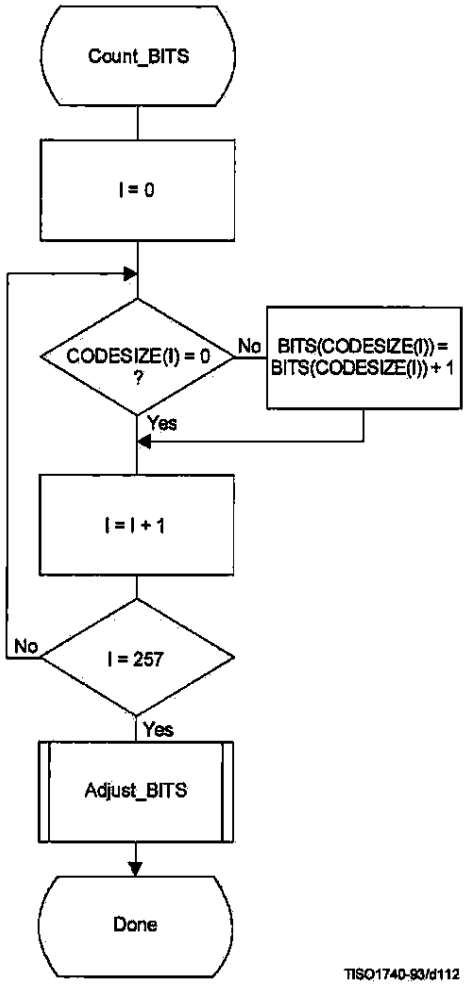

Figure K.2 – Procedure to find the number of codes of each size

JA513
CONFIDENTIAL BUSINESS INFORMATION PHLPSKD_00047572

Figure K.3 gives the procedure for adjusting the BITS list so that no code is longer than 16 bits. Since symbols are paired for the longest Huffman code, the symbols are removed from this length category two at a time. The prefix for the pair (which is one bit shorter) is allocated to one of the pair; then (skipping the BITS entry for that prefix length) a code word from the next shortest non-zero BITS entry is converted into a prefix for two code words one bit longer. After the BITS list is reduced to a maximum code length of 16 bits, the last step removes the reserved code point from the code length count.

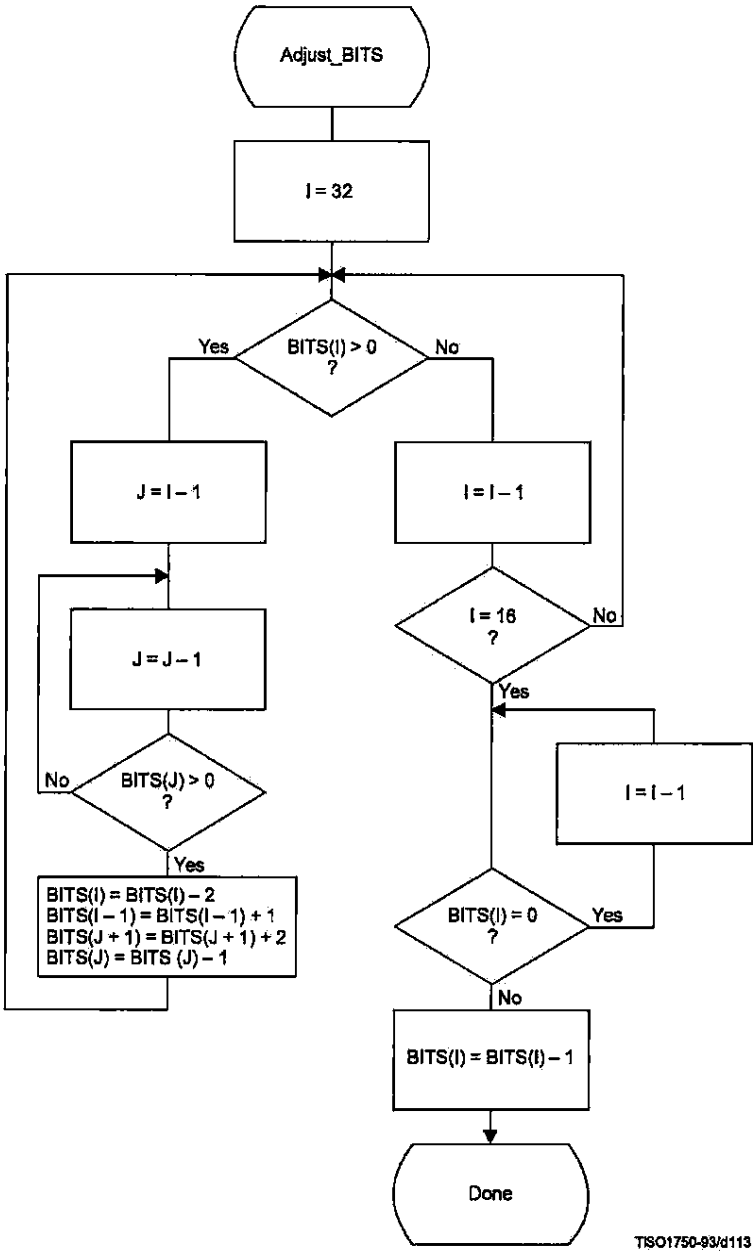

Figure K.3 – Procedure for limiting code lengths to 16 bits

JA514
CONFIDENTIAL BUSINESS INFORMATION PHLPSKD_00047573

The input values are sorted according to code size as shown in Figure K.4. HUFFVAL is the list containing the input values associated with each code word, in order of increasing code length.

At this point, the list of code lengths (BITS) and the list of values (HUFFVAL) can be used to generate the code tables. These procedures are described in Annex C.

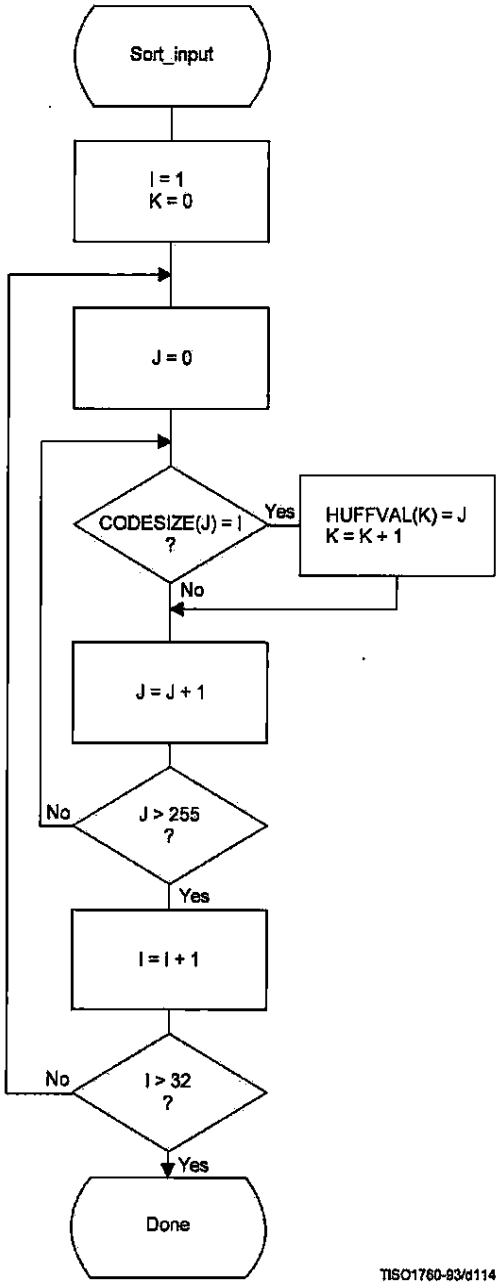

Figure K.4 – Sorting of input values according to code size

K.3 Typical Huffman tables for 8-bit precision luminance and chrominance

Huffman table-specification syntax is specified in B.2.4.2.

JA515
CONFIDENTIAL BUSINESS INFORMATION PHLPSKD_00047574

K.3.1 Typical Huffman tables for the DC coefficient differences

Tables K.3 and K.4 give Huffman tables for the DC coefficient differences which have been developed from the average statistics of a large set of video images with 8-bit precision. Table K.3 is appropriate for luminance components and Table K.4 is appropriate for chrominance components. Although there are no default tables, these tables may prove to be useful for many applications.

Table K.3 – Table for luminance DC coefficient differences

Category	Code length	Code word
0	2	00
1	3	010
2	3	011
3	3	100
4	3	101
5	3	110
6	4	1110
7	5	11110
8	6	111110
9	7	1111110
10	8	11111110
11	9	111111110

Table K.4 – Table for chrominance DC coefficient differences

Category	Code length	Code word
0	2	00
1	2	01
2	2	10
3	3	110
4	4	1110
5	5	11110
6	6	111110
7	7	1111110
8	8	11111110
9	9	111111110
10	10	1111111110
11	11	11111111110

K.3.2 Typical Huffman tables for the AC coefficients

Tables K.5 and K.6 give Huffman tables for the AC coefficients which have been developed from the average statistics of a large set of images with 8-bit precision. Table K.5 is appropriate for luminance components and Table K.6 is appropriate for chrominance components. Although there are no default tables, these tables may prove to be useful for many applications.

JA516
CONFIDENTIAL BUSINESS INFORMATION PHLPSKD_00047575

Table K.5 – Table for luminance AC coefficients (sheet 1 of 4)

Run/Size	Code length	Code word
0/0 (EOB)	4	1010
0/1	2	00
0/2	2	01
0/3	3	100
0/4	4	1011
0/5	5	11010
0/6	7	1111000
0/7	8	11111000
0/8	10	1111110110
0/9	16	1111111110000010
0/A	16	1111111110000011
1/1	4	1100
1/2	5	11011
1/3	7	1111001
1/4	9	111110110
1/5	11	11111110110
1/6	16	1111111110000100
1/7	16	1111111110000101
1/8	16	1111111110000110
1/9	16	1111111110000111
1/A	16	1111111110001000
2/1	5	11100
2/2	8	11111001
2/3	10	1111110111
2/4	12	111111110100
2/5	16	1111111110001001
2/6	16	1111111110001010
2/7	16	1111111110001011
2/8	16	1111111110001100
2/9	16	1111111110001101
2/A	16	1111111110001110
3/1	6	111010
3/2	9	111110111
3/3	12	111111110101
3/4	16	1111111110001111
3/5	16	1111111110010000
3/6	16	1111111110010001
3/7	16	1111111110010010
3/8	16	1111111110010011
3/9	16	1111111110010100
3/A	16	1111111110010101

JA517
CONFIDENTIAL BUSINESS INFORMATION PHLPSKD_00047576

Table K.5 (sheet 2 of 4)

Run/Size	Code length	Code word
4/1	6	111011
4/2	10	1111111000
4/3	16	1111111110010110
4/4	16	1111111110010111
4/5	16	1111111110011000
4/6	16	1111111110011001
4/7	16	1111111110011010
4/8	16	1111111110011011
4/9	16	1111111110011100
4/A	16	1111111110011101
5/1	7	1111010
5/2	11	11111110111
5/3	16	1111111110011110
5/4	16	1111111110011111
5/5	16	1111111110100000
5/6	16	1111111110100001
5/7	16	1111111110100010
5/8	16	1111111110100011
5/9	16	1111111110100100
5/A	16	1111111110100101
6/1	7	1111011
6/2	12	111111110110
6/3	16	1111111110100110
6/4	16	1111111110100111
6/5	16	1111111110101000
6/6	16	1111111110101001
6/7	16	1111111110101010
6/8	16	1111111110101011
6/9	16	1111111110101100
6/A	16	1111111110101101
7/1	8	11111010
7/2	12	111111110111
7/3	16	1111111110101110
7/4	16	1111111110101111
7/5	16	1111111110110000
7/6	16	1111111110110001
7/7	16	1111111110110010
7/8	16	1111111110110011
7/9	16	1111111110110100
7/A	16	1111111110110101
8/1	9	111111000
8/2	15	111111111000000

JA518
CONFIDENTIAL BUSINESS INFORMATION PHLPSKD_00047577

Table K.5 (sheet 3 of 4)

Run/Size	Code length	Code word
8/3	16	1111111110110110
8/4	16	1111111110110111
8/5	16	1111111110111000
8/6	16	1111111110111001
8/7	16	1111111110111010
8/8	16	1111111110111011
8/9	16	1111111110111100
8/A	16	1111111110111101
9/1	9	111111001
9/2	16	1111111110111110
9/3	16	1111111110111111
9/4	16	1111111111000000
9/5	16	1111111111000001
9/6	16	1111111111000010
9/7	16	1111111111000011
9/8	16	1111111111000100
9/9	16	1111111111000101
9/A	16	1111111111000110
A/1	9	111111010
A/2	16	1111111111000111
A/3	16	1111111111001000
A/4	16	1111111111001001
A/5	16	1111111111001010
A/6	16	1111111111001011
A/7	16	1111111111001100
A/8	16	1111111111001101
A/9	16	1111111111001110
A/A	16	1111111111001111
B/1	10	1111111001
B/2	16	1111111111010000
B/3	16	1111111111010001
B/4	16	1111111111010010
B/5	16	1111111111010011
B/6	16	1111111111010100
B/7	16	1111111111010101
B/8	16	1111111111010110
B/9	16	1111111111010111
B/A	16	1111111111011000
C/1	10	1111111010
C/2	16	1111111111011001
C/3	16	1111111111011010
C/4	16	1111111111011011

CONFIDENTIAL BUSINESS INFORMATION PHLPSKD_00047578

Table K.5 (sheet 4 of 4)

Run/Size	Code length	Code word
C/5	16	1111111111011100
C/6	16	1111111111011101
C/7	16	1111111111011110
C/8	16	1111111111011111
C/9	16	1111111111100000
C/A	16	1111111111100001
D/1	11	11111111000
D/2	16	1111111111100010
D/3	16	1111111111100011
D/4	16	1111111111100100
D/5	16	1111111111100101
D/6	16	1111111111100110
D/7	16	1111111111100111
D/8	16	1111111111101000
D/9	16	1111111111101001
D/A	16	1111111111101010
E/1	16	1111111111101011
E/2	16	1111111111101100
E/3	16	1111111111101101
E/4	16	1111111111101110
E/5	16	1111111111101111
E/6	16	1111111111110000
E/7	16	1111111111110001
E/8	16	1111111111110010
E/9	16	1111111111110011
E/A	16	1111111111110100
F/0 (ZRL)	11	11111111001
F/1	16	1111111111110101
F/2	16	1111111111110110
F/3	16	1111111111110111
F/4	16	1111111111111000
F/5	16	1111111111111001
F/6	16	1111111111111010
F/7	16	1111111111111011
F/8	16	1111111111111100
F/9	16	1111111111111101
F/A	16	1111111111111110

JA520
CONFIDENTIAL BUSINESS INFORMATION PHLPSKD_00047579

Table K.6 – Table for chrominance AC coefficients (sheet 1 of 4)

Run/Size	Code length	Code word
0/0 (EOB)	2	00
0/1	2	01
0/2	3	100
0/3	4	1010
0/4	5	11000
0/5	5	11001
0/6	6	111000
0/7	7	1111000
0/8	9	111110100
0/9	10	1111110110
0/A	12	111111110100
1/1	4	1011
1/2	6	111001
1/3	8	11110110
1/4	9	111110101
1/5	11	11111110110
1/6	12	111111110101
1/7	16	1111111110001000
1/8	16	1111111110001001
1/9	16	1111111110001010
1/A	16	1111111110001011
2/1	5	11010
2/2	8	11110111
2/3	10	1111110111
2/4	12	111111110110
2/5	15	111111111000010
2/6	16	1111111110001100
2/7	16	1111111110001101
2/8	16	1111111110001110
2/9	16	1111111110001111
2/A	16	1111111110010000
3/1	5	11011
3/2	8	11111000
3/3	10	1111111000
3/4	12	111111110111
3/5	16	1111111110010001
3/6	16	1111111110010010
3/7	16	1111111110010011
3/8	16	1111111110010100
3/9	16	1111111110010101
3/A	16	1111111110010110
4/1	6	111010

JA521
CONFIDENTIAL BUSINESS INFORMATION PHLPSKD_00047580

Table K.6 (sheet 2 of 4)

Run/Size	Code length	Code word
4/2	9	111110110
4/3	16	1111111110010111
4/4	16	1111111110011000
4/5	16	1111111110011001
4/6	16	1111111110011010
4/7	16	1111111110011011
4/8	16	1111111110011100
4/9	16	1111111110011101
4/A	16	1111111110011110
5/1	6	111011
5/2	10	1111111001
5/3	16	1111111110011111
5/4	16	1111111110100000
5/5	16	1111111110100001
5/6	16	1111111110100010
5/7	16	1111111110100011
5/8	16	1111111110100100
5/9	16	1111111110100101
5/A	16	1111111110100110
6/1	7	1111001
6/2	11	11111110111
6/3	16	1111111110100111
6/4	16	1111111110101000
6/5	16	1111111110101001
6/6	16	1111111110101010
6/7	16	1111111110101011
6/8	16	1111111110101100
6/9	16	1111111110101101
6/A	16	1111111110101110
7/1	7	1111010
7/2	11	11111111000
7/3	16	1111111110101111
7/4	16	1111111110110000
7/5	16	1111111110110001
7/6	16	1111111110110010
7/7	16	1111111110110011
7/8	16	1111111110110100
7/9	16	1111111110110101
7/A	16	1111111110110110
8/1	8	11111001
8/2	16	1111111110110111
8/3	16	1111111110111000

JA522
CONFIDENTIAL BUSINESS INFORMATION PHLPSKD_00047581

Table K.6 (sheet 3 of 4)

Run/Size	Code length	Code word
8/4	16	1111111110111001
8/5	16	1111111110111010
8/6	16	1111111110111011
8/7	16	1111111110111100
8/8	16	1111111110111101
8/9	16	1111111110111110
8/A	16	1111111110111111
9/1	9	111110111
9/2	16	1111111111000000
9/3	16	1111111111000001
9/4	16	1111111111000010
9/5	16	1111111111000011
9/6	16	1111111111000100
9/7	16	1111111111000101
9/8	16	1111111111000110
9/9	16	1111111111000111
9/A	16	1111111111001000
A/1	9	111111000
A/2	16	1111111111001001
A/3	16	1111111111001010
A/4	16	1111111111001011
A/5	16	1111111111001100
A/6	16	1111111111001101
A/7	16	1111111111001110
A/8	16	1111111111001111
A/9	16	1111111111010000
A/A	16	1111111111010001
B/1	9	111111001
B/2	16	1111111111010010
B/3	16	1111111111010011
B/4	16	1111111111010100
B/5	16	1111111111010101
B/6	16	1111111111010110
B/7	16	1111111111010111
B/8	16	1111111111011000
B/9	16	1111111111011001
B/A	16	1111111111011010
C/1	9	111111010
C/2	16	1111111111011011
C/3	16	1111111111011100
C/4	16	1111111111011101
C/5	16	1111111111011110

CONFIDENTIAL BUSINESS INFORMATION PHLPSKD_00047582

Table K.6 (sheet 4 of 4)

Run/Size	Code length	Code word
C/6	16	1111111111011111
C/7	16	1111111111100000
C/8	16	1111111111100001
C/9	16	1111111111100010
C/A	16	1111111111100011
D/1	11	11111111001
D/2	16	1111111111100100
D/3	16	1111111111100101
D/4	16	1111111111100110
D/5	16	1111111111100111
D/6	16	1111111111101000
D/7	16	1111111111101001
D/8	16	1111111111101010
D/9	16	1111111111101011
D/A	16	1111111111101100
E/1	14	11111111100000
E/2	16	1111111111101101
E/3	16	1111111111101110
E/4	16	1111111111101111
E/5	16	1111111111110000
E/6	16	1111111111110001
E/7	16	1111111111110010
E/8	16	1111111111110011
E/9	16	1111111111110100
E/A	16	1111111111110101
F/0 (ZRL)	10	1111111010
F/1	15	111111111000011
F/2	16	1111111111110110
F/3	16	1111111111110111
F/4	16	1111111111111000
F/5	16	1111111111111001
F/6	16	1111111111111010
F/7	16	1111111111111011
F/8	16	1111111111111100
F/9	16	1111111111111101
F/A	16	1111111111111110

JA524
CONFIDENTIAL BUSINESS INFORMATION PHLPSKD_00047583

K.3.3 Huffman table-specification examples

K.3.3.1 Specification of typical tables for DC difference coding

A set of typical tables for DC component coding is given in K.3.1. The specification of these tables is as follows:

For Table K.3 (for luminance DC coefficients), the 16 bytes which specify the list of code lengths for the table are

X'00 01 05 01 01 01 01 01 01 00 00 00 00 00 00 00'

The set of values following this list is

X'00 01 02 03 04 05 06 07 08 09 0A 0B'

For Table K.4 (for chrominance DC coefficients), the 16 bytes which specify the list of code lengths for the table are

X'00 03 01 01 01 01 01 01 01 01 01 00 00 00 00 00'

The set of values following this list is

X'00 01 02 03 04 05 06 07 08 09 0A 0B'

K.3.3.2 Specification of typical tables for AC coefficient coding

A set of typical tables for AC component coding is given in K.3.2. The specification of these tables is as follows:

For Table K.5 (for luminance AC coefficients), the 16 bytes which specify the list of code lengths for the table are

X'00 02 01 03 03 02 04 03 05 05 04 04 00 00 01 7D'

The set of values which follows this list is

X'01 02 03 00 04 11 05 12 21 31 41 06 13 51 61 07
22 71 14 32 81 91 A1 08 23 42 B1 C1 15 52 D1 F0
24 33 62 72 82 09 0A 16 17 18 19 1A 25 26 27 28
29 2A 34 35 36 37 38 39 3A 43 44 45 46 47 48 49
4A 53 54 55 56 57 58 59 5A 63 64 65 66 67 68 69
6A 73 74 75 76 77 78 79 7A 83 84 85 86 87 88 89
8A 92 93 94 95 96 97 98 99 9A A2 A3 A4 A5 A6 A7
A8 A9 AA B2 B3 B4 B5 B6 B7 B8 B9 BA C2 C3 C4 C5
C6 C7 C8 C9 CA D2 D3 D4 D5 D6 D7 D8 D9 DA E1 E2
E3 E4 E5 E6 E7 E8 E9 EA F1 F2 F3 F4 F5 F6 F7 F8
F9 FA'

JA525
CONFIDENTIAL BUSINESS INFORMATION PHLPSKD_00047584

For Table K.6 (for chrominance AC coefficients), the 16 bytes which specify the list of code lengths for the table are

X'00 02 01 02 04 04 03 04 07 05 04 04 00 01 02 77'

The set of values which follows this list is:

X'00 01 02 03 11 04 05 21 31 06 12 41 51 07 61 71
13 22 32 81 08 14 42 91 A1 B1 C1 09 23 33 52 F0
15 62 72 D1 0A 16 24 34 E1 25 F1 17 18 19 1A 26
27 28 29 2A 35 36 37 38 39 3A 43 44 45 46 47 48
49 4A 53 54 55 56 57 58 59 5A 63 64 65 66 67 68
69 6A 73 74 75 76 77 78 79 7A 82 83 84 85 86 87
88 89 8A 92 93 94 95 96 97 98 99 9A A2 A3 A4 A5
A6 A7 A8 A9 AA B2 B3 B4 B5 B6 B7 B8 B9 BA C2 C3
C4 C5 C6 C7 C8 C9 CA D2 D3 D4 D5 D6 D7 D8 D9 DA
E2 E3 E4 E5 E6 E7 E8 E9 EA F2 F3 F4 F5 F6 F7 F8
F9 FA'

K.4 Additional information on arithmetic coding

K.4.1 Test sequence for a small data set for the arithmetic coder

The following 256-bit test sequence (in hexadecimal form) is structured to test many of the encoder and decoder paths:

X'00020051 000000C0 0352872A AAAAAAAA 82C02000 FCD79EF6 74EAABF7 697EE74C'

Tables K.7 and K.8 provide a symbol-by-symbol list of the arithmetic encoder and decoder operation. In these tables the event count, EC, is listed first, followed by the value of Qe used in encoding and decoding that event. The decision D to be encoded (and decoded) is listed next. The column labeled MPS contains the sense of the MPS, and if it is followed by a CE (in the "CX" column), the conditional MPS/LPS exchange occurs when encoding and decoding the decision (see Figures D.3, D.4 and D.17). The contents of the A and C registers are the values before the event is encoded and decoded. ST is the number of X'FF' bytes stacked in the encoder waiting for a resolution of the carry-over. Note that the A register is always greater than X'7FFF'. (The starting value has an implied value of X'10000'.)

In the encoder test, the code bytes (B) are listed if they were completed during the coding of the preceding event. If additional bytes follow, they were also completed during the coding of the preceding event. If a byte is listed in the Bx column, the preceding byte in column B was modified by a carry-over.

In the decoder the code bytes are listed if they were placed in the code register just prior to the event EC.

For this file the coded bit count is 240, including the overhead to flush the final data from the C register. When the marker X'FFD9' is appended, a total of 256 bits are output. The actual compressed data sequence for the encoder is (in hexadecimal form)

X'655B5144 F7969D51 7855BFFF 00FC5184 C7CEF939 00287D46 708ECBC0 F6FFD900'

JA526
CONFIDENTIAL BUSINESS INFORMATION PHLPSKD_00047585

Table K.7 – Encoder test sequence (sheet 1 of 7)

EC	D	MPS	CX	Qe (hexadecimal)	A (hexadecimal)	C (hexadecimal)	CT	ST	Bx	B
1	0	0		5A1D	0000	00000000	11	0		
2	0	0	CE	5A1D	A5E3	00000000	11	0		
3	0	0		2586	B43A	0000978C	10	0		
4	0	0		2586	8EB4	0000978C	10	0		
5	0	0		1114	D25C	00012F18	9	0		
6	0	0		1114	C148	00012F18	9	0		
7	0	0		1114	B034	00012F18	9	0		
8	0	0		1114	9F20	00012F18	9	0		
9	0	0		1114	8E0C	00012F18	9	0		
10	0	0		080B	F9F0	00025E30	8	0		
11	0	0		080B	F1E5	00025E30	8	0		
12	0	0		080B	E9DA	00025E30	8	0		
13	0	0		080B	E1CF	00025E30	8	0		
14	0	0		080B	D9C4	00025E30	8	0		
15	1	0		080B	D1B9	00025E30	8	0		
16	0	0		17B9	80B0	00327DE0	4	0		
17	0	0		1182	D1EE	0064FBC0	3	0		
18	0	0		1182	C06C	0064FBC0	3	0		
19	0	0		1182	AEEA	0064FBC0	3	0		
20	0	0		1182	9D68	0064FBC0	3	0		
21	0	0		1182	8BE6	0064FBC0	3	0		
22	0	0		0CEF	F4C8	00C9F780	2	0		
23	0	0		0CEF	E7D9	00C9F780	2	0		
24	0	0		0CEF	DAEA	00C9F780	2	0		
25	0	0		0CEF	CDFB	00C9F780	2	0		
26	1	0		0CEF	C10C	00C9F780	2	0		
27	0	0		1518	CEF0	000AB9D0	6	0		65
28	1	0		1518	B9D8	000AB9D0	6	0		
29	0	0		1AA9	A8C0	005AF480	3	0		
30	0	0		1AA9	8E17	005AF480	3	0		
31	0	0		174E	E6DC	00B5E900	2	0		
32	1	0		174E	CF8E	00B5E900	2	0		
33	0	0		1AA9	BA70	00050A00	7	0		5B
34	0	0		1AA9	9FC7	00050A00	7	0		
35	0	0		1AA9	851E	00050A00	7	0		
36	0	0		174E	D4EA	000A1400	6	0		

JA527
CONFIDENTIAL BUSINESS INFORMATION PHLPSKD_00047586

Table K.7 – Encoder test sequence (sheet 2 of 7)

EC	D	MPS	CX	Qe (hexadecimal)	A (hexadecimal)	C (hexadecimal)	CT	ST	Bx	B
37	0	0		174E	BD9C	000A1400	6	0		
38	0	0		174E	A64E	000A1400	6	0		
39	0	0		174E	8F00	000A1400	6	0		
40	0	0		1424	EF64	00142800	5	0		
41	0	0		1424	DB40	00142800	5	0		
42	0	0		1424	C71C	00142800	5	0		
43	0	0		1424	B2F8	00142800	5	0		
44	0	0		1424	9ED4	00142800	5	0		
45	0	0		1424	8AB0	00142800	5	0		
46	0	0		119C	ED18	00285000	4	0		
47	0	0		119C	DB7C	00285000	4	0		
48	0	0		119C	C9E0	00285000	4	0		
49	0	0		119C	B844	00285000	4	0		
50	0	0		119C	A6A8	00285000	4	0		
51	0	0		119C	950C	00285000	4	0		
52	0	0		119C	8370	00285000	4	0		
53	0	0		0F6B	E3A8	0050A000	3	0		
54	0	0		0F6B	D43D	0050A000	3	0		
55	0	0		0F6B	C4D2	0050A000	3	0		
56	0	0		0F6B	B567	0050A000	3	0		
57	1	0		0F6B	A5FC	0050A000	3	0		
58	1	0		1424	F6B0	00036910	7	0		51
59	0	0		1AA9	A120	00225CE0	4	0		
60	0	0		1AA9	8677	00225CE0	4	0		
61	0	0		174E	D79C	0044B9C0	3	0		
62	0	0		174E	C04E	0044B9C0	3	0		
63	0	0		174E	A900	0044B9C0	3	0		
64	0	0		174E	91B2	0044B9C0	3	0		
65	0	0		1424	F4C8	00897380	2	0		
66	0	0		1424	E0A4	00897380	2	0		
67	0	0		1424	CC80	00897380	2	0		
68	0	0		1424	B85C	00897380	2	0		
69	0	0		1424	A438	00897380	2	0		
70	0	0		1424	9014	00897380	2	0		
71	1	0		119C	F7E0	0112E700	1	0		
72	1	0		1424	8CF0	001F6A20	6	0		44
73	0	0		1AA9	A120	00F716E0	3	0		

JA528
CONFIDENTIAL BUSINESS INFORMATION PHLPSKD_00047587

Table K.7 – Encoder test sequence (sheet 3 of 7)

EC	D	MPS	CX	Qe (hexadecimal)	A (hexadecimal)	C (hexadecimal)	CT	ST	Bx	B
74	1	0		1AA9	8677	00F716E0	3	0		
75	0	0		2516	D548	00041570	8	0		F7
76	1	0		2516	B032	00041570	8	0		
77	0	0		299A	9458	00128230	6	0		
78	0	0		2516	D57C	00250460	5	0		
79	1	0		2516	B066	00250460	5	0		
80	0	0		299A	9458	00963EC0	3	0		
81	1	0		2516	D57C	012C7D80	2	0		
82	0	0		299A	9458	0004B798	8	0		96
83	0	0		2516	D57C	00096F30	7	0		
84	0	0		2516	B066	00096F30	7	0		
85	0	0		2516	8B50	00096F30	7	0		
86	1	0		1EDF	CC74	0012DE60	6	0		
87	1	0		2516	F6F8	009C5FA8	3	0		
88	1	0		299A	9458	0274C628	1	0		
89	0	0		32B4	A668	0004C398	7	0		9D
90	0	0		2E17	E768	00098730	6	0		
91	1	0		2E17	B951	00098730	6	0		
92	0	0		32B4	B85C	002849A8	4	0		
93	1	0		32B4	85A8	002849A8	4	0		
94	0	0		3C3D	CAD0	00A27270	2	0		
95	1	0		3C3D	8E93	00A27270	2	0		
96	0	0		415E	F0F4	00031318	8	0		51
97	1	0		415E	AF96	00031318	8	0		
98	0	0	CE	4639	82BC	000702A0	7	0		
99	1	0		415E	8C72	000E7E46	6	0		
100	0	0	CE	4639	82BC	001D92B4	5	0		
101	1	0		415E	8C72	003B9E6E	4	0		
102	0	0	CE	4639	82BC	0077D304	3	0		
103	1	0		415E	8C72	00F01F0E	2	0		
104	0	0	CE	4639	82BC	01E0D444	1	0		
105	1	0		415E	8C72	0002218E	8	0		78
106	0	0	CE	4639	82BC	0004D944	7	0		
107	1	0		415E	8C72	000A2B8E	6	0		
108	0	0	CE	4639	82BC	0014ED44	5	0		
109	1	0		415E	8C72	002A538E	4	0		
110	0	0	CE	4639	82BC	00553D44	3	0		

CONFIDENTIAL BUSINESS INFORMATION PHLPSKD_00047588

Table K.7 – Encoder test sequence (sheet 4 of 7)

EC	D	MPS	CX	Qe (hexadecimal)	A (hexadecimal)	C (hexadecimal)	CT	ST	Bx	B
111	1	0		415E	8C72	00AAF38E	2	0		
112	0	0	CE	4639	82BC	01567D44	1	0		
113	1	0		415E	8C72	0005738E	8	0		55
114	0	0	CE	4639	82BC	000B7D44	7	0		
115	1	0		415E	8C72	0017738E	6	0		
116	0	0	CE	4639	82BC	002F7D44	5	0		
117	1	0		415E	8C72	005F738E	4	0		
118	0	0	CE	4639	82BC	00BF7D44	3	0		
119	1	0		415E	8C72	017F738E	2	0		
120	0	0	CE	4639	82BC	02FF7D44	1	0		
121	1	0		415E	8C72	0007738E	8	0		BF
122	0	0	CE	4639	82BC	000F7D44	7	0		
123	1	0		415E	8C72	001F738E	6	0		
124	0	0	CE	4639	82BC	003F7D44	5	0		
125	1	0		415E	8C72	007F738E	4	0		
126	0	0	CE	4639	82BC	00FF7D44	3	0		
127	1	0		415E	8C72	01FF738E	2	0		
128	0	0	CE	4639	82BC	03FF7D44	1	0		
129	1	0		415E	8C72	0007738E	8	1		
130	0	0	CE	4639	82BC	000F7D44	7	1		
131	0	0		415E	8C72	001F738E	6	1		
132	0	0		3C3D	9628	003EE71C	5	1		
133	0	0		375E	B3D6	007DCE38	4	1		
134	0	0		32B4	F8F0	00FB9C70	3	1		
135	1	0		32B4	C63C	00FB9C70	3	1		
136	0	0		3C3D	CAD0	03F0BFE0	1	1		
137	1	0		3C3D	8E93	03F0BFE0	1	1		
138	1	0		415E	F0F4	000448D8	7	0		FF00FC
139	0	0	CE	4639	82BC	0009F0DC	6	0		
140	0	0		415E	8C72	00145ABE	5	0		
141	0	0		3C3D	9628	0028B57C	4	0		
142	0	0		375E	B3D6	00516AF8	3	0		
143	0	0		32B4	F8F0	00A2D5F0	2	0		
144	0	0		32B4	C63C	00A2D5F0	2	0		
145	0	0		32B4	9388	00A2D5F0	2	0		
146	0	0		2E17	C1A8	0145ABE0	1	0		

JA530
CONFIDENTIAL BUSINESS INFORMATION PHLPSKD_00047589

Table K.7 – Encoder test sequence (sheet 5 of 7)

EC	D	MPS	CX	Qe (hexadecimal)	A (hexadecimal)	C (hexadecimal)	CT	ST	Bx	B
147	1	0		2E17	9391	0145ABE0	1	0		
148	0	0		32B4	B85C	00084568	7	0		51
149	0	0		32B4	85A8	00084568	7	0		
150	0	0		2E17	A5E8	00108AD0	6	0		
151	0	0		299A	EFA2	002115A0	5	0		
152	0	0		299A	C608	002115A0	5	0		
153	0	0		299A	9C6E	002115A0	5	0		
154	0	0		2516	E5A8	00422B40	4	0		
155	0	0		2516	C092	00422B40	4	0		
156	0	0		2516	9B7C	00422B40	4	0		
157	0	0		1EDF	ECCC	00845680	3	0		
158	0	0		1EDF	CDED	00845680	3	0		
159	0	0		1EDF	AF0E	00845680	3	0		
160	0	0		1EDF	902F	00845680	3	0		
161	1	0		1AA9	E2A0	0108AD00	2	0		
162	1	0		2516	D548	000BA7B8	7	0		84
163	1	0		299A	9458	00315FA8	5	0		
164	1	0		32B4	A668	00C72998	3	0		
165	1	0		3C3D	CAD0	031E7530	1	0		
166	1	0		415E	F0F4	000C0F0C	7	0		C7
167	0	0	CE	4639	82BC	00197D44	6	0		
168	0	0		415E	8C72	0033738E	5	0		
169	1	0		3C3D	9628	0066E71C	4	0		
170	1	0		415E	F0F4	019D041C	2	0		
171	0	0	CE	4639	82BC	033B6764	1	0		
172	1	0		415E	8C72	000747CE	8	0		CE
173	0	0	CE	4639	82BC	000F25C4	7	0		
174	1	0		415E	8C72	001EC48E	6	0		
175	1	0	CE	4639	82BC	003E1F44	5	0		
176	1	0		4B85	F20C	00F87D10	3	0		
177	1	0	CE	504F	970A	01F2472E	2	0		
178	0	0	CE	5522	8D76	03E48E5C	1	0		
179	0	0		504F	AA44	00018D60	8	0		F9
180	1	0		4B85	B3EA	00031AC0	7	0		
181	1	0	CE	504F	970A	0007064A	6	0		
182	1	0	CE	5522	8D76	000E0C94	5	0		
183	1	0		59EB	E150	00383250	3	0		

JA531
CONFIDENTIAL BUSINESS INFORMATION PHLPSKD_00047590

Table K.7 – Encoder test sequence (sheet 6 of 7)

EC	D	MPS	CX	Qe (hexadecimal)	A (hexadecimal)	C (hexadecimal)	CT	ST	Bx	B
184	0	1		59EB	B3D6	0071736A	2	0		
185	1	0		59EB	B3D6	00E39AAA	1	0		
186	1	1		59EB	B3D6	0007E92A	8	0		38
187	1	1		5522	B3D6	000FD254	7	0		
188	1	1		504F	BD68	001FA4A8	6	0		
189	0	1		4B85	DA32	003F4950	5	0		
190	1	1	CE	504F	970A	007FAFFA	4	0		
191	1	1		4B85	A09E	00FFED6A	3	0		
192	0	1		4639	AA32	01FFDAD4	2	0		
193	0	1	CE	4B85	8C72	04007D9A	1	0		
194	1	1	CE	504F	81DA	0000FB34	8	0	39	00
195	1	1		4B85	A09E	0002597E	7	0		
196	1	1		4639	AA32	0004B2FC	6	0		
197	0	1		415E	C7F2	000965F8	5	0		
198	1	1	CE	4639	82BC	0013D918	4	0		
199	0	1		415E	8C72	00282B36	3	0		
200	0	1	CE	4639	82BC	0050EC94	2	0		
201	1	1		4B85	F20C	0003B250	8	0		28
202	1	1		4B85	A687	0003B250	8	0		
203	1	1		4639	B604	000764A0	7	0		
204	0	1		415E	DF96	000EC940	6	0		
205	1	1	CE	4639	82BC	001ECEF0	5	0		
206	0	1		415E	8C72	003E16E6	4	0		
207	1	1	CE	4639	82BC	007CC3F4	3	0		
208	0	1		415E	8C72	00FA00EE	2	0		
209	1	1	CE	4639	82BC	01F49804	1	0		
210	0	1		415E	8C72	0001A90E	8	0		7D
211	1	1	CE	4639	82BC	0003E844	7	0		
212	0	1		415E	8C72	0008498E	6	0		
213	1	1	CE	4639	82BC	00112944	5	0		
214	0	1		415E	8C72	0022CB8E	4	0		
215	1	1	CE	4639	82BC	00462D44	3	0		
216	1	1		415E	8C72	008CD38E	2	0		
217	1	1		3C3D	9628	0119A71C	1	0		
218	1	1		375E	B3D6	00034E38	8	0		46
219	1	1		32B4	F8F0	00069C70	7	0		
220	1	1		32B4	C63C	00069C70	7	0		

JA532
CONFIDENTIAL BUSINESS INFORMATION PHLPSKD_00047591

Table K.7 – Encoder test sequence (sheet 7 of 7)

EC	D	MPS	CX	Qe (hexadecimal)	A (hexadecimal)	C (hexadecimal)	CT	ST	Bx	B
221	0	1		32B4	9388	00069C70	7	0		
222	1	1		3C3D	CAD0	001BF510	5	0		
223	1	1		3C3D	8E93	001BF510	5	0		
224	1	1		375E	A4AC	0037EA20	4	0		
225	0	1		32B4	DA9C	006FD440	3	0		
226	1	1		3C3D	CAD0	01C1F0A0	1	0		
227	1	1		3C3D	8E93	01C1F0A0	1	0		
228	0	1		375E	A4AC	0003E140	8	0		70
229	1	1		3C3D	DD78	00113A38	6	0		
230	0	1		3C3D	A13B	00113A38	6	0		
231	0	1		415E	F0F4	00467CD8	4	0		
232	1	1	CE	4639	82BC	008E58DC	3	0		
233	0	1		415E	8C72	011D2ABE	2	0		
234	1	1	CE	4639	82BC	023AEBA4	1	0		
235	1	1		415E	8C72	0006504E	8	0		8E
236	1	1		3C3D	9628	000CA09C	7	0		
237	1	1		375E	B3D6	00194138	6	0		
238	1	1		32B4	F8F0	00328270	5	0		
239	1	1		32B4	C63C	00328270	5	0		
240	0	1		32B4	9388	00328270	5	0		
241	1	1		3C3D	CAD0	00CB8D10	3	0		
242	1	1		3C3D	8E93	00CB8D10	3	0		
243	1	1		375E	A4AC	01971A20	2	0		
244	0	1		32B4	DA9C	032E3440	1	0		
245	0	1		3C3D	CAD0	000B70A0	7	0		CB
246	1	1		415E	F0F4	002FFCCC	5	0		
247	1	1		415E	AF96	002FFCCC	5	0		
248	1	1		3C3D	DC70	005FF998	4	0		
249	0	1		3C3D	A033	005FF998	4	0		
250	1	1		415E	F0F4	01817638	2	0		
251	0	1		415E	AF96	01817638	2	0		
252	0	1	CE	4639	82BC	0303C8E0	1	0		
253	1	1		4B85	F20C	000F2380	7	0		C0
254	1	1		4B85	A687	000F2380	7	0		
255	0	1		4639	B604	001E4700	6	0		
256	0	1	CE	4B85	8C72	003D6D96	5	0		
Flush:					81DA	007ADB2C	4	0		F6 FFD9

JA533
CONFIDENTIAL BUSINESS INFORMATION PHLPSKD_00047592

Table K.8 – Decoder test sequence (sheet 1 of 7)

EC	D	MPS	CX	Qe (hexadecimal)	A (hexadecimal)	C (hexadecimal)	CT	B
1	0	0		5A1D	0000	655B0000	0	65 5B
2	0	0	CE	5A1D	A5E3	655B0000	0	
3	0	0		2586	B43A	332AA200	7	51
4	0	0		2586	8EB4	332AA200	7	
5	0	0		1114	D25C	66554400	6	
6	0	0		1114	C148	66554400	6	
7	0	0		1114	B034	66554400	6	
8	0	0		1114	9F20	66554400	6	
9	0	0		1114	8E0C	66554400	6	
10	0	0		080B	F9F0	CCAA8800	5	
11	0	0		080B	F1F5	CCAA8800	5	
12	0	0		080B	E9DA	CCAA8800	5	
13	0	0		080B	E1CF	CCAA8800	5	
14	0	0		080B	D9C4	CCAA8800	5	
15	1	0		080B	D1B9	CCAA8800	5	
16	0	0		17B9	80B0	2FC88000	1	
17	0	0		1182	D1EE	5F910000	0	
18	0	0		1182	C06C	5F910000	0	
19	0	0		1182	AEEA	5F910000	0	
20	0	0		1182	9D68	5F910000	0	
21	0	0		1182	8BE6	5F910000	0	
22	0	0		0CEF	F4C8	BF228800	7	44
23	0	0		0CEF	E7D9	BF228800	7	
24	0	0		0CEF	DAEA	BF228800	7	
25	0	0		0CEF	CDFB	BF228800	7	
26	1	0		0CEF	C10C	BF228800	7	
27	0	0		1518	CEF0	B0588000	3	
28	1	0		1518	B9D8	B0588000	3	
29	0	0		1AA9	A8C0	5CC40000	0	
30	0	0		1AA9	8E17	5CC40000	0	
31	0	0		174E	E6DC	B989EE00	7	F7
32	1	0		174E	CF8E	B989EE00	7	
33	0	0		1AA9	BA70	0A4F7000	4	
34	0	0		1AA9	9FC7	0A4F7000	4	
35	0	0		1AA9	851E	0A4F7000	4	
36	0	0		174E	D4EA	149EE000	3	
37	0	0		174E	BD9C	149EE000	3	
38	0	0		174E	A64E	149EE000	3	
39	0	0		174E	8F00	149EE000	3	
40	0	0		1424	EF64	293DC000	2	

JA534
CONFIDENTIAL BUSINESS INFORMATION PHLPSKD_00047593

Table K.8 – Decoder test sequence (sheet 2 of 7)

EC	D	MPS	CX	Qe (hexadecimal)	A (hexadecimal)	C (hexadecimal)	CT	B
41	0	0		1424	DB40	293DC000	2	
42	0	0		1424	C71C	293DC000	2	
43	0	0		1424	B2F8	293DC000	2	
44	0	0		1424	9ED4	293DC000	2	
45	0	0		1424	8AB0	293DC000	2	
46	0	0		119C	ED18	527B8000	1	
47	0	0		119C	DB7C	527B8000	1	
48	0	0		119C	C9E0	527B8000	1	
49	0	0		119C	B844	527B8000	1	
50	0	0		119C	A6A8	527B8000	1	
51	0	0		119C	950C	527B8000	1	
52	0	0		119C	8370	527B8000	1	
53	0	0		0F6B	E3A8	A4F70000	0	
54	0	0		0F6B	D43D	A4F70000	0	
55	0	0		0F6B	C4D2	A4F70000	0	
56	0	0		0F6B	B567	A4F70000	0	
57	1	0		0F6B	A5FC	A4F70000	0	
58	1	0		1424	F6B0	E6696000	4	96
59	0	0		1AA9	A120	1EEB0000	1	
60	0	0		1AA9	8677	1EEB0000	1	
61	0	0		174E	D79C	3DD60000	0	
62	0	0		174E	C04E	3DD60000	0	
63	0	0		174E	A900	3DD60000	0	
64	0	0		174E	91B2	3DD60000	0	
65	0	0		1424	F4C8	7BAD3A00	7	9D
66	0	0		1424	E0A4	7BAD3A00	7	
67	0	0		1424	CC80	7BAD3A00	7	
68	0	0		1424	B85C	7BAD3A00	7	
69	0	0		1424	A438	7BAD3A00	7	
70	0	0		1424	9014	7BAD3A00	7	
71	1	0		119C	F7E0	F75A7400	6	
72	1	0		1424	8CE0	88B3A000	3	
73	0	0		1AA9	A120	7FBD0000	0	
74	1	0		1AA9	8677	7FBD0000	0	
75	0	0		2516	D548	9F7A8800	5	51
76	1	0		2516	B032	9F7A8800	5	
77	0	0		299A	9458	517A2000	3	
78	0	0		2516	D57C	A2F44000	2	
79	1	0		2516	B066	A2F44000	2	
80	0	0		299A	9458	5E910000	0	

CONFIDENTIAL BUSINESS INFORMATION PHLPSKD_00047594

Table K.8 – Decoder test sequence (sheet 3 of 7)

EC	D	MPS	CX	Qe (hexadecimal)	A (hexadecimal)	C (hexadecimal)	CT	B
81	1	0		2516	D57C	BD22F000	7	78
82	0	0		299A	9458	32F3C000	5	
83	0	0		2516	D57C	65E78000	4	
84	0	0		2516	B066	65E78000	4	
85	0	0		2516	8B50	65E78000	4	
86	1	0		1EDF	CC74	CBCF0000	3	
87	1	0		2516	F6F8	F1D00000	0	
88	1	0		299A	9458	7FB95400	6	55
89	0	0		32B4	A668	53ED5000	4	
90	0	0		2E17	E768	A7DAA000	3	
91	1	0		2E17	B951	A7DAA000	3	
92	0	0		32B4	B85C	72828000	1	
93	1	0		32B4	85A8	72828000	1	
94	0	0		3C3D	CAD0	7E3B7E00	7	BF
95	1	0		3C3D	8E93	7E3B7E00	7	
96	0	0		415E	F0F4	AF95F800	5	
97	1	0		415E	AF96	AF95F800	5	
98	0	0	CE	4639	82BC	82BBF000	4	
99	1	0		415E	8C72	8C71E000	3	
100	0	0	CE	4639	82BC	82BBC000	2	
101	1	0		415E	8C72	8C718000	1	
102	0	0	CE	4639	82BC	82BB0000	0	
103	1	0		415E	8C72	8C71FE00	7	FF 00
104	0	0	CE	4639	82BC	82BBFC00	6	
105	1	0		415E	8C72	8C71F800	5	
106	0	0	CE	4639	82BC	82BBF000	4	
107	1	0		415E	8C72	8C71E000	3	
108	0	0	CE	4639	82BC	82BBC000	2	
109	1	0		415E	8C72	8C718000	1	
110	0	0	CE	4639	82BC	82BB0000	0	
111	1	0		415E	8C72	8C71F800	7	FC
112	0	0	CE	4639	82BC	82BBF000	6	
113	1	0		415E	8C72	8C71E000	5	
114	0	0	CE	4639	82BC	82BBC000	4	
115	1	0		415E	8C72	8C718000	3	
116	0	0	CE	4639	82BC	82BB0000	2	
117	1	0		415E	8C72	8C700000	1	
118	0	0	CE	4639	82BC	82B80000	0	
119	1	0		415E	8C72	8C6AA200	7	51
120	0	0	CE	4639	82BC	82AD4400	6	

JA536
CONFIDENTIAL BUSINESS INFORMATION PHLPSKD_00047595

Table K.8 – Decoder test sequence (sheet 4 of 7)

EC	D	MPS	CX	Qe (hexadecimal)	A (hexadecimal)	C (hexadecimal)	CT	B
121	1	0		415E	8C72	8C548800	5	
122	0	0	CE	4639	82BC	82811000	4	
123	1	0		415E	8C72	8BFC2000	3	
124	0	0	CE	4639	82BC	81D04000	2	
125	1	0		415E	8C72	8A9A8000	1	
126	0	0	CE	4639	82BC	7F0D0000	0	
127	1	0		415E	8C72	85150800	7	84
128	0	0	CE	4639	82BC	74021000	6	
129	1	0		415E	8C72	6EFE2000	5	
130	0	0	CE	4639	82BC	47D44000	4	
131	0	0		415E	8C72	16A28000	3	
132	0	0		3C3D	9628	2D450000	2	
133	0	0		375E	B3D6	5A8A0000	1	
134	0	0		32B4	F8F0	B5140000	0	
135	1	0		32B4	C63C	B5140000	0	
136	0	0		3C3D	CAD0	86331C00	6	C7
137	1	0		3C3D	8E93	86331C00	6	
138	1	0		415E	F0F4	CF747000	4	
139	0	0	CE	4639	82BC	3FBCE000	3	
140	0	0		415E	8C72	0673C000	2	
141	0	0		3C3D	9628	0CE78000	1	
142	0	0		375E	B3D6	19CF0000	0	
143	0	0		32B4	F8F0	339F9C00	7	CE
144	0	0		32B4	C63C	339F9C00	7	
145	0	0		32B4	9388	339F9C00	7	
146	0	0		2E17	C1A8	673F3800	6	
147	1	0		2E17	9391	673F3800	6	
148	0	0		32B4	B85C	0714E000	4	
149	0	0		32B4	85A8	0714E000	4	
150	0	0		2E17	A5E8	0E29C000	3	
151	0	0		299A	EFA2	1C538000	2	
152	0	0		299A	C608	1C538000	2	
153	0	0		299A	9C6E	1C538000	2	
154	0	0		2516	F5A8	38A70000	1	
155	0	0		2516	C092	38A70000	1	
156	0	0		2516	9B7C	38A70000	1	
157	0	0		1EDF	ECCC	714E0000	0	
158	0	0		1EDF	CDED	714E0000	0	
159	0	0		1EDF	AF0E	714E0000	0	
160	0	0		1EDF	902F	714E0000	0	

CONFIDENTIAL BUSINESS INFORMATION PHLPSKD_00047596

Table K.8 – Decoder test sequence (sheet 5 of 7)

EC	D	MPS	CX	Qe (hexadecimal)	A (hexadecimal)	C (hexadecimal)	CT	B
161	1	0		1AA9	E2A0	E29DF200	7	F9
162	1	0		2516	D548	D5379000	4	
163	1	0		299A	9458	94164000	2	
164	1	0		32B4	A668	A5610000	0	
165	1	0		3C3D	CAD0	C6B4E400	6	39
166	1	0		415E	F0F4	E0879000	4	
167	0	0	CE	4639	82BC	61E32000	3	
168	0	0		415E	8C72	4AC04000	2	
169	1	0		3C3D	9628	95808000	1	
170	1	0		415E	F0F4	EE560000	7	00
171	0	0	CE	4639	82BC	7D800000	6	
172	1	0		415E	8C72	81FA0000	5	
173	0	0	CE	4639	82BC	6DCC0000	4	
174	1	0		415E	8C72	62920000	3	
175	1	0	CE	4639	82BC	2EFC0000	2	
176	1	0		4B85	F20C	BBF00000	0	
177	1	0	CE	504F	970A	2AD25000	7	28
178	0	0	CE	5522	8D76	55A4A000	6	
179	0	0		504F	AA44	3AA14000	5	
180	1	0		4B85	B3EA	75428000	4	
181	1	0	CE	504F	970A	19BB0000	3	
182	1	0	CE	5522	8D76	33760000	2	
183	1	0		59EB	E150	CDD80000	0	
184	0	1		59EB	B3D6	8CE6FA00	7	7D
185	1	0		59EB	B3D6	65F7F400	6	
186	1	1		59EB	B3D6	1819E800	5	
187	1	1		5522	B3D6	3033D000	4	
188	1	1		504F	BD68	6067A000	3	
189	0	1		4B85	DA32	C0CF4000	2	
190	1	1	CE	504F	970A	64448000	1	
191	1	1		4B85	A09E	3B130000	0	
192	0	1		4639	AA32	76268C00	7	46
193	0	1	CE	4B85	8C72	245B1800	6	
194	1	1	CE	504F	81DA	48B63000	5	
195	1	1		4B85	A09E	2E566000	4	
196	1	1		4639	AA32	5CACC000	3	
197	0	1		415E	C7F2	B9598000	2	
198	1	1	CE	4639	82BC	658B0000	1	
199	0	1		415E	8C72	52100000	0	
200	0	1	CE	4639	82BC	0DF8E000	7	70

JA538
CONFIDENTIAL BUSINESS INFORMATION PHLPSKD_00047597

Table K.8 – Decoder test sequence (sheet 6 of 7)

EC	D	MPS	CX	Qe (hexadecimal)	A (hexadecimal)	C (hexadecimal)	CT	B
201	1	1		4B85	F20C	37E38000	5	
202	1	1		4B85	A687	37E38000	5	
203	1	1		4639	B604	6FC70000	4	
204	0	1		415E	DF96	DF8E0000	3	
205	1	1	CE	4639	82BC	82AC0000	2	
206	0	1		415E	8C72	8C520000	1	
207	1	1	CE	4639	82BC	827C0000	0	
208	0	1		415E	8C72	8BF31C00	7	8E
209	1	1	CE	4639	82BC	81BE3800	6	
210	0	1		415E	8C72	8A767000	5	
211	1	1	CE	4639	82BC	7FC4E000	4	
212	0	1		415E	8C72	8483C000	3	
213	1	1	CE	4639	82BC	72DF8000	2	
214	0	1		415E	8C72	6CB90000	1	
215	1	1	CE	4639	82BC	434A0000	0	
216	1	1		415E	8C72	0D8F9600	7	CB
217	1	1		3C3D	9628	1B1F2C00	6	
218	1	1		375E	B3D6	363E5800	5	
219	1	1		32B4	F8F0	6C7CB000	4	
220	1	1		32B4	C63C	6C7CB000	4	
221	0	1		32B4	9388	6C7CB000	4	
222	1	1		3C3D	CAD0	2EA2C000	2	
223	1	1		3C3D	8E93	2EA2C000	2	
224	1	1		375E	A4AC	5D458000	1	
225	0	1		32B4	DA9C	BA8B0000	0	
226	1	1		3C3D	CAD0	4A8F0000	6	C0
227	1	1		3C3D	8E93	4A8F0000	6	
228	0	1		375E	A4AC	951E0000	5	
229	1	1		3C3D	DD78	9F400000	3	
230	0	1		3C3D	A13B	9F400000	3	
231	0	1		415E	F0F4	E9080000	1	
232	1	1	CE	4639	82BC	72E40000	0	
233	0	1		415E	8C72	6CC3EC00	7	F6
234	1	1	CE	4639	82BC	435FD800	6	
235	1	1		415E	8C72	0DB9B000	5	
236	1	1		3C3D	9628	1B736000	4	
237	1	1		375E	B3D6	36E6C000	3	
238	1	1		32B4	F8F0	6DCD8000	2	
239	1	1		32B4	C63C	6DCD8000	2	
240	0	1		32B4	9388	6DCD8000	2	

JA539
CONFIDENTIAL BUSINESS INFORMATION PHLPSKD_00047598

Table K.8 – Decoder test sequence (sheet 7 of 7)

EC	D	MPS	CX	Qe (hexadecimal)	A (hexadecimal)	C (hexadecimal)	CT	B
241	1	1		3C3D	CAD0	33E60000	0	
242	1	1		3C3D	8E93	33E60000	0	
Marker detected: zero byte fed to decoder								
243	1	1		375E	A4AC	67CC0000	7	
244	0	1		32B4	DA9C	CF980000	6	
245	0	1		3C3D	CAD0	9EC00000	4	
246	1	1		415E	F0F4	40B40000	2	
247	1	1		415E	AF96	40B40000	2	
248	1	1		3C3D	DC70	81680000	1	
249	0	1		3C3D	A033	81680000	1	
Marker detected: zero byte fed to decoder								
250	1	1		415E	F0F4	75C80000	7	
251	0	1		415E	AF96	75C80000	7	
252	0	1	CE	4639	82BC	0F200000	6	
253	1	1		4B85	F20C	3C800000	4	
254	1	1		4B85	A687	3C800000	4	
255	0	1		4639	B604	79000000	3	
256	0	1	CE	4B85	8C72	126A0000	2	

K.5 Low-pass downsampling filters for hierarchical coding

In this section simple examples are given of downsampling filters which are compatible with the upsampling filter defined in J.1.1.2.

Figure K.5 shows the weighting of neighbouring samples for simple one-dimensional horizontal and vertical low-pass filters. The output of the filter must be normalized by the sum of the neighbourhood weights.

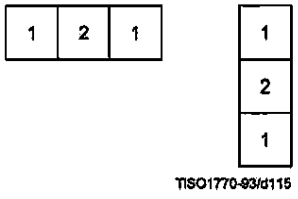

Figure K.5 – Low-pass filter example

The centre sample in Figure K.5 should be aligned with the left column or top line of the high resolution image when calculating the left column or top line of the low resolution image. Sample values which are situated outside of the image boundary are replicated from the sample values at the boundary to provide missing edge values.

If the image being downsampled has an odd width or length, the odd dimension is increased by 1 by sample replication on the right edge or bottom line before downsampling.

JA540
CONFIDENTIAL BUSINESS INFORMATION PHLPSKD_00047599

K.6 Domain of applicability of DCT and spatial coding techniques

The DCT coder is intended for lossy coding in a range from quite visible loss to distortion well below the threshold for visibility. However in general, DCT-based processes cannot be used for true lossless coding.

The lossless coder is intended for completely lossless coding. The lossless coding process is significantly less effective than the DCT-based processes for distortions near and above the threshold of visibility.

The point transform of the input to the lossless coder permits a very restricted form of lossy coding with the "lossless" coder. (The coder is still lossless after the input point transform.) Since the DCT is intended for lossy coding, there may be some confusion about when this alternative lossy technique should be used.

Lossless coding with a point transformed input is intended for applications which cannot be addressed by DCT coding techniques. Among these are

- true lossless coding to a specified precision;
- lossy coding with precisely defined error bounds;
- hierarchical progression to a truly lossless final stage.

If lossless coding with a point transformed input is used in applications which can be met effectively by DCT coding, the results will be significantly less satisfactory. For example, distortion in the form of visible contours usually appears when precision of the luminance component is reduced to about six bits. For normal image data, this occurs at bit rates well above those for which the DCT gives outputs which are visually indistinguishable from the source.

K.7 Domain of applicability of the progressive coding modes of operation

Two very different progressive coding modes of operation have been defined, progressive coding of the DCT coefficients and hierarchical progression. Progressive coding of the DCT coefficients has two complementary procedures, spectral selection and successive approximation. Because of this diversity of choices, there may be some confusion as to which method of progression to use for a given application.

K.7.1 Progressive coding of the DCT

In progressive coding of the DCT coefficients two complementary procedures are defined for decomposing the 8×8 DCT coefficient array, spectral selection and successive approximation. Spectral selection partitions zig-zag array of DCT coefficients into "bands", one band being coded in each scan. Successive approximation codes the coefficients with reduced precision in the first scan; in each subsequent scan the precision is increased by one bit.

A single forward DCT is calculated for these procedures. When all coefficients are coded to full precision, the DCT is the same as in the sequential mode. Therefore, like the sequential DCT coding, progressive coding of DCT coefficients is intended for applications which need very good compression for a given level of visual distortion.

The simplest progressive coding technique is spectral selection; indeed, because of this simplicity, some applications may choose – despite the limited progression that can be achieved – to use only spectral selection. Note, however, that the absence of high frequency bands typically leads – for a given bit rate – to a significantly lower image quality in the intermediate stages than can be achieved with the more general progressions. The net coding efficiency at the completion of the final stage is typically comparable to or slightly less than that achieved with the sequential DCT.

A much more flexible progressive system is attained at some increase in complexity when successive approximation is added to the spectral selection progression. For a given bit rate, this system typically provides significantly better image quality than spectral selection alone. The net coding efficiency at the completion of the final stage is typically comparable to or slightly better than that achieved with the sequential DCT.

K.7.2 Hierarchical progression

Hierarchical progression permits a sequence of outputs of increasing spatial resolution, and also allows refinement of image quality at a given spatial resolution. Both DCT and spatial versions of the hierarchical progression are allowed, and progressive coding of DCT coefficients may be used in a frame of the DCT hierarchical progression.

The DCT hierarchical progression is intended for applications which need very good compression for a given level of visual distortion; the spatial hierarchical progression is intended for applications which need a simple progression with a truly lossless final stage. Figure K.6 illustrates examples of these two basic hierarchical progressions.

JA541
CONFIDENTIAL BUSINESS INFORMATION PHLPSKD_00047600

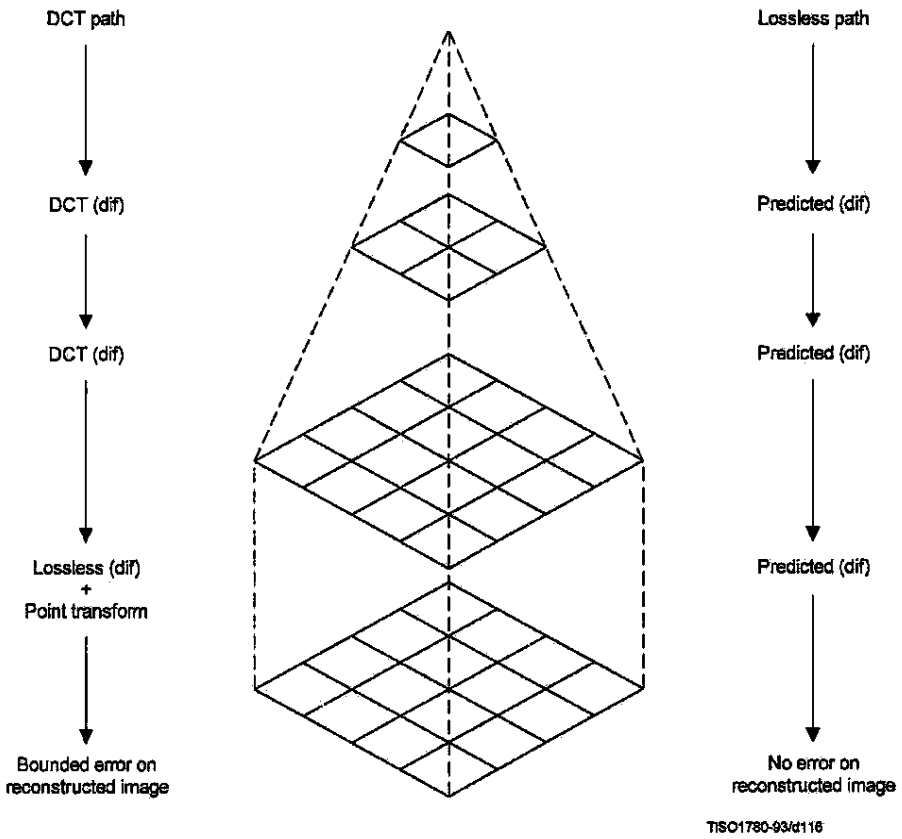

Figure K.6 – Sketch of the basic operations of the hierarchical mode

K.7.2.1 DCT Hierarchical progression

If a DCT hierarchical progression uses reduced spatial resolution, the early stages of the progression can have better image quality for a given bit rate than the early stages of non-hierarchical progressive coding of the DCT coefficients. However, at the point where the distortion between source and output becomes indistinguishable, the coding efficiency achieved with a DCT hierarchical progression is typically significantly lower than the coding efficiency achieved with a non-hierarchical progressive coding of the DCT coefficients.

While the hierarchical DCT progression is intended for lossy progressive coding, a final spatial differential coding stage can be used. When this final stage is used, the output can be almost lossless, limited only by the difference between the encoder and decoder IDCT implementations. Since IDCT implementations can differ significantly, truly lossless coding after a DCT hierarchical progression cannot be guaranteed. An important alternative, therefore, is to use the input point transform of the final lossless differential coding stage to reduce the precision of the differential input. This allows a bounding of the difference between source and output at a significantly lower cost in coded bits than coding of the full precision spatial difference would require.

K.7.2.2 Spatial hierarchical progression

If lossless progression is required, a very simple hierarchical progression may be used in which the spatial lossless coder with point transformed input is used as a first stage. This first stage is followed by one or more spatial differential coding stages. The first stage should be nearly lossless, such that the low order bits which are truncated by the point transform are essentially random – otherwise the compression efficiency will be degraded relative to non-progressive lossless coding.

JA542
CONFIDENTIAL BUSINESS INFORMATION PHLPSKD_00047601

K.8 Suppression of block-to-block discontinuities in decoded images

A simple technique is available for suppressing the block-to-block discontinuities which can occur in images compressed by DCT techniques.

The first few (five in this example) low frequency DCT coefficients are predicted from the nine DC values of the block and the eight nearest-neighbour blocks, and the predicted values are used to suppress blocking artifacts in smooth areas of the image.

The prediction equations for the first five AC coefficients in the zig-zag sequence are obtained as follows:

K.8.1 AC prediction

The sample field in a 3 by 3 array of blocks (each block containing an 8 × 8 array of samples) is modeled by a two-dimensional second degree polynomial of the form:

$$P(x,y) = A1(x^2y^2) + A2(x^2y) + A3(xy^2) + A4(x^2) + A5(xy) + A6(y^2) + A7(x) + A8(y) + A9$$

The nine coefficients A1 through A9 are uniquely determined by imposing the constraint that the mean of P(x,y) over each of the nine blocks must yield the correct DC-values.

Applying the DCT to the quadratic field predicting the samples in the central block gives a prediction of the low frequency AC coefficients depicted in Figure K.7.

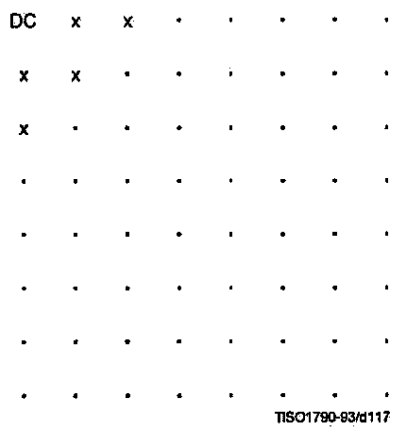

Figure K.7 – DCT array positions of predicted AC coefficients

The prediction equations derived in this manner are as follows:

For the two dimensional array of DC values shown

DC_1 DC_2 DC_3
DC_4 DC_5 DC_6
DC_7 DC_8 DC_9

The unquantized prediction equations are

$AC_{01} = 1{,}13885\ (DC_4 - DC_6)$
$AC_{10} = 1{,}13885\ (DC_2 - DC_8)$
$AC_{20} = 0{,}27881\ (DC_2 + DC_8 - 2 \times DC_5)$
$AC_{11} = 0{,}16213\ ((DC_1 - DC_3) - (DC_7 - DC_9))$
$AC_{02} = 0{,}27881\ (DC_4 + DC_6 - 2 \times DC_5)$

The scaling of the predicted AC coefficients is consistent with the DCT normalization defined in A.3.3.

JA543
CONFIDENTIAL BUSINESS INFORMATION PHLPSKD_00047602

K.8.2 Quantized AC prediction

The prediction equations can be mapped to a form which uses quantized values of the DC coefficients and which computes quantized AC coefficients using integer arithmetic. The quantized DC coefficients need to be scaled, however, such that the predicted coefficients have fractional bit precision.

First, the prediction equation coefficients are scaled by 32 and rounded to the nearest integer. Thus,

$$1{,}13885 \times 32 = 36$$

$$0{,}27881 \times 32 = 9$$

$$0{,}16213 \times 32 = 5$$

The multiplicative factors are then scaled by the ratio of the DC and AC quantization factors and rounded appropriately. The normalization defined for the DCT introduces another factor of 8 in the unquantized DC values. Therefore, in terms of the quantized DC values, the predicted quantized AC coefficients are given by the equations below. Note that if (for example) the DC values are scaled by a factor of 4, the AC predictions will have 2 fractional bits of precision relative to the quantized DCT coefficients.

$$QAC_{01} = ((R_d \times Q_{01}) + (36 \times Q_{00} \times (QDC_4 - QDC_6)))/(256 \times Q_{01})$$
$$QAC_{10} = ((R_d \times Q_{10}) + (36 \times Q_{00} \times (QDC_2 - QDC_8)))/(256 \times Q_{10})$$
$$QAC_{20} = ((R_d \times Q_{20}) + (9 \times Q_{00} \times (QDC_2 + QDC_8 - 2 \times QDC_5)))/(256 \times Q_{20})$$
$$QAC_{11} = ((R_d \times Q_{11}) + (5 \times Q_{00} \times ((QDC_1 - QDC_3) - (QDC_7 - QDC_9))))/(256 \times Q_{11})$$
$$QAC_{02} = ((R_d \times Q_{02}) + (9 \times Q_{00} \times (QDC_4 + QDC_6 - 2 \times QDC_5)))/(256 \times Q_{02})$$

where QDC_x and QAC_{xy} are the quantized and scaled DC and AC coefficient values. The constant Rd is added to get a correct rounding in the division. Rd is 128 for positive numerators, and –128 for negative numerators.

Predicted values should not override coded values. Therefore, predicted values for coefficients which are already non-zero should be set to zero. Predictions should be clamped if they exceed a value which would be quantized to a non-zero value for the current precision in the successive approximation.

K.9 Modification of dequantization to improve displayed image quality

For a progression where the first stage successive approximation bit, Al, is set to 3, uniform quantization of the DCT gives the following quantization and dequantization levels for a sequence of successive approximation scans, as shown in Figure K.8:

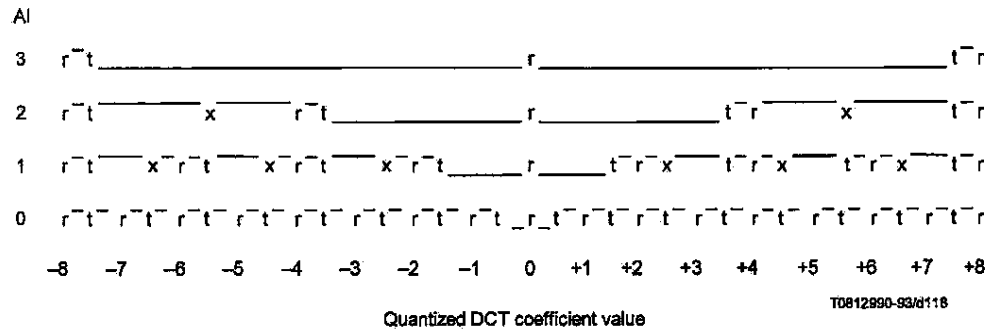

Figure K.8 – Illustration of two reconstruction strategies

The column to the left labelled "Al" gives the bit position specified in the scan header. The quantized DCT coefficient magnitudes are therefore divided by 2^{Al} during that scan.

JA544
CONFIDENTIAL BUSINESS INFORMATION PHLPSKD_00047603

Referring to the final scan (Al = 0), the points marked with "t" are the threshold values, while the points marked with "r" are the reconstruction values. The unquantized output is obtained by multiplying the horizontal scale in Figure K.8 by the quantization value.

The quantization interval for a coefficient value of zero is indicated by the depressed interval of the line. As the bit position Al is increased, a "fat zero" quantization interval develops around the zero DCT coefficient value. In the limit where the scaling factor is very large, the zero interval is twice as large as the rest of the quantization intervals.

Two different reconstruction strategies are shown. The points marked "r" are the reconstruction obtained using the normal rounding rules for the DCT for the complete full precision output. This rule seems to give better image quality when high bandwidth displays are used. The points marked "x" are an alternative reconstruction which tends to give better images on lower bandwidth displays. "x" and "r" are the same for slice 0. The system designer must determine which strategy is best for the display system being used.

K.10 Example of point transform

The difference between the arithmetic-shift-right by Pt and divide by 2^{Pt} can be seen from the following:

After the level shift the DC has values from +127 to –128. Consider values near zero (after the level shift), and the case where Pt = 1:

Before level shift	Before point transform	After divide by 2	After shift-right-arithmetic 1
131	+3	+1	+1
130	+2	+1	+1
129	+1	0	0
128	0	0	0
127	–1	0	–1
126	–2	–1	–1
125	–3	–1	–2
124	–4	–2	–2
123	–5	–2	–3

The key difference is in the truncation of precision. The divide truncates the magnitude; the arithmetic shift truncates the LSB. With a divide by 2 we would get non-uniform quantization of the DC values; therefore we use the shift-right-arithmetic operation.

For positive values, the divide by 2 and the shift-right-arithmetic by 1 operations are the same. Therefore, the shift-right-arithmetic by 1 operation effectively is a divide by 2 when the point transform is done before the level shift.

JA545
CONFIDENTIAL BUSINESS INFORMATION PHLPSKD_00047604

Annex L

Patents

(This annex does not form an integral part of this Recommendation | International Standard)

L.1 Introductory remarks

The user's attention is called to the possibility that – for some of the coding processes specified in Annexes F, G, H, and J – compliance with this Specification may require use of an invention covered by patent rights.

By publication of this Specification, no position is taken with respect to the validity of this claim or of any patent rights in connection therewith. However, for each patent listed in this annex, the patent holder has filed with the Information Technology Task Force (ITTF) and the Telecommunication Standardization Bureau (TSB) a statement of willingness to grant a license under these rights on reasonable and non-discriminatory terms and conditions to applicants desiring to obtain such a license.

The criteria for including patents in this annex are:

a) the patent has been identified by someone who is familiar with the technical fields relevant to this Specification, and who believes use of the invention covered by the patent is *required* for implementation of one or more of the coding processes specified in Annexes F, G, H, or J;

b) the patent-holder has written a letter to the ITTF and TSB, stating willingness to grant a license to an unlimited number of applicants throughout the world under reasonable terms and conditions that are demonstrably free of any unfair discrimination.

This list of patents shall be updated, if necessary, upon publication of any revisions to the Recommendation | International Standard.

L.2 List of patents

The following patents may be required for implementation of any one of the processes specified in Annexes F, G, H, and J which uses arithmetic coding:

US 4,633,490, December 30, 1986, IBM, MITCHELL (J.L.) and GOERTZEL (G.): *Symmetrical Adaptive Data Compression/Decompression System.*

US 4,652,856, February 4, 1986, IBM, MOHIUDDIN (K.M.) and RISSANEN (J.J.): *A Multiplication-free Multi-Alphabet Arithmetic Code.*

US 4,369,463, January 18, 1983, IBM, ANASTASSIOU (D.) and MITCHELL (J.L.): *Grey Scale Image Compression with Code Words a Function of Image History.*

US 4,749,983, June 7, 1988, IBM, LANGDON (G.): *Compression of Multilevel Signals.*

US 4,935,882, June 19, 1990, IBM, PENNEBAKER (W.B.) and MITCHELL (J.L.): *Probability Adaptation for Arithmetic Coders.*

US 4,905,297, February 27, 1990, IBM, LANGDON (G.G.), Jr., MITCHELL (J.L.), PENNEBAKER (W.B.), and RISSANEN (J.J.): *Arithmetic Coding Encoder and Decoder System.*

US 4,973,961, November 27, 1990, AT&T, CHAMZAS (C.), DUTTWEILER (D.L.): *Method and Apparatus for Carry-over Control in Arithmetic Entropy Coding.*

US 5,025,258, June 18, 1991, AT&T, DUTTWEILER (D.L): *Adaptive Probability Estimator for Entropy Encoding/Decoding.*

US 5,099,440, March 24, 1992, IBM, PENNEBAKER (W.B.) and MITCHELL (J.L.): *Probability Adaptation for Arithmetic Coders.*

Japanese Patent Application 2-46275, February 26, 1990, MEL ONO (F.), KIMURA (T.), YOSHIDA (M.), and KINO (S.): *Coding System.*

The following patent may be required for implementation of any one of the hierarchical processes specified in Annex H when used with a lossless final frame:

US 4,665,436, May 12, 1987, EI OSBORNE (J.A.) and SEIFFERT (C.): *Narrow Bandwidth Signal Transmission.*

JA546
CONFIDENTIAL BUSINESS INFORMATION PHLPSKD_00047605

No other patents required for implementation of any of the other processes specified in Annexes F, G, H, or J had been identified at the time of publication of this Specification.

L.3 Contact addresses for patent information

Director, Telecommunication Standardization Bureau (formerly CCITT)
International Telecommunication Union
Place des Nations
CH-1211 Genève 20, Switzerland
Tel. +41 (22) 730 5111
Fax: +41 (22) 730 5853

Information Technology Task Force
International Organization for Standardization
1, rue de Varembé
CH-1211 Genève 20, Switzerland
Tel: +41 (22) 734 0150
Fax: +41 (22) 733 3843

Program Manager, Licensing
Intellectual Property and Licensing Services
IBM Corporation
208 Harbor Drive
P.O. Box 10501
Stamford, Connecticut 08904-2501, USA
Tel: +1 (203) 973 7935
Fax: +1 (203) 973 7981 or +1 (203) 973 7982

Mitsubishi Electric Corp.
Intellectual Property License Department
1-2-3 Morunouchi, Chiyoda-ku
Tokyo 100, Japan
Tel: +81 (3) 3218 3465
Fax: +81 (3) 3215 3842

AT&T Intellectual Property Division Manager
Room 3A21
10 Independence Blvd.
Warren, NJ 07059, USA
Tel: +1 (908) 580 5392
Fax: +1 (908) 580 6355

Senior General Manager
Corporate Intellectual Property and Legal Headquarters
Canon Inc.
30-2 Shimomaruko 3-chome
Ohta-ku Tokyo 146 Japan
Tel: +81 (3) 3758 2111
Fax: +81 (3) 3756 0947

Chief Executive Officer
Electronic Imagery, Inc.
1100 Park Central Boulevard South
Suite 3400
Pompano Beach, FL 33064, USA
Tel: +1 (305) 968 7100
Fax: +1 (305) 968 7319

CONFIDENTIAL BUSINESS INFORMATION PHLPSKD_00047606

Annex M

Bibliography

(This annex does not form an integral part of this Recommendation | International Standard)

M.1 General references

LEGER (A.), OMACHI (T.), and WALLACE (G.K.): JPEG Still Picture Compression Algorithm, *Optical Engineering*, Vol. 30, No. 7, pp. 947-954, 1991.

RABBANI (M.) and JONES (P.): Digital Image Compression Techniques, *Tutorial Texts in Optical Engineering*, Vol. TT7, SPIE Press, 1991.

HUDSON (G.), YASUDA (H.) and SEBESTYEN (I.): The International Standardization of a Still Picture Compression Technique, *Proc. of IEEE Global Telecommunications Conference*, pp. 1016-1021, 1988.

LEGER (A.), MITCHELL (J.) and YAMAZAKI (Y.): Still Picture Compression Algorithm Evaluated for International Standardization, *Proc. of the IEEE Global Telecommunications Conference*, pp. 1028-1032, 1988.

WALLACE (G.), VIVIAN (R.) and POULSEN (H.): Subjective Testing Results for Still Picture Compression Algorithms for International Standardization, *Proc. of the IEEE Global Telecommunications Conference*, pp. 1022-1027, 1988.

MITCHELL (J.L.) and PENNEBAKER (W.B.): Evolving JPEG Colour Data Compression Standard, *Standards for Electronic Imaging Systems*, M. Nier, M.E. Courtot, Editors, SPIE, Vol. CR37, pp. 68-97, 1991.

WALLACE (G.K.): The JPEG Still Picture Compression Standard, *Communications of the ACM*, Vol. 34, No. 4, pp. 31-44, 1991.

NETRAVALI (A.N.) and HASKELL (B.G.): *Digital Pictures: Representation and Compression*, Plenum Press, New York 1988.

PENNEBAKER (W.B.) and MITCHELL (J.L.): *JPEG: Still Image Data Compression Standard*, Van Nostrand Reinhold, New York 1993.

M.2 DCT references

CHEN (W.), SMITH (C.H.) and FRALICK (S.C.): A Fast Computational Algorithm for the Discrete Cosine Transform, *IEEE Trans. on Communications*, Vol. COM-25, pp. 1004-1009, 1977.

AHMED (N.), NATARAJAN (T.) and RAO (K.R.): Discrete Cosine Transform, *IEEE Trans. on Computers*, Vol. C-23, pp. 90-93, 1974.

NARASINHA (N.J.) and PETERSON (A.M.): On the Computation of the Discrete Cosine Transform, *IEEE Trans. on Communications*, Vol. COM-26, No. 6, pp. 966-968, 1978.

DUHAMEL (P.) and GUILLEMOT (C.): Polynomial Transform Computation of the 2-D DCT, *Proc. IEEE ICASSP-90*, pp. 1515-1518, Albuquerque, New Mexico 1990.

FEIG (E.): A Fast Scaled DCT Algorithm, in *Image Processing Algorithms and Techniques*, Proc. SPIE, Vol. 1244, K.S. Pennington and R. J. Moorhead II, Editors, pp. 2-13, Santa Clara, California, 1990.

HOU (H.S.): A Fast Recursive Algorithm for Computing the Discrete Cosine Transform, *IEEE Trans. Acoust. Speech and Signal Processing*, Vol. ASSP-35, No. 10, pp. 1455-1461.

LEE (B.G.): A New Algorithm to Compute the Discrete Cosine Transform, *IEEE Trans. on Acoust., Speech and Signal Processing*, Vol. ASSP-32, No. 6, pp. 1243-1245, 1984.

LINZER (E.N.) and FEIG (E.): New DCT and Scaled DCT Algorithms for Fused Multiply/Add Architectures, *Proc. IEEE ICASSP-91*, pp. 2201-2204, Toronto, Canada, 1991.

VETTERLI (M.) and NUSSBAUMER (H.J.): Simple FFT and DCT Algorithms with Reduced Number of Operations, *Signal Processing*, 1984.

JA548
CONFIDENTIAL BUSINESS INFORMATION PHLPSKD_00047607

VETTERLI (M.): Fast 2-D Discrete Cosine Transform, *Proc. IEEE ICASSP-85*, pp. 1538-1541, Tampa, Florida, 1985.

ARAI (Y.), AGUI (T.), and NAKAJIMA (M.): A Fast DCT-SQ Scheme for Images, *Trans. of IEICE*, Vol. E.71, No. 11, pp. 1095-1097, 1988.

SUEHIRO (N.) and HATORI (M.): Fast Algorithms for the DFT and other Sinusoidal Transforms, *IEEE Trans. on Acoust., Speech and Signal Processing*, Vol ASSP-34, No. 3, pp. 642-644, 1986.

M.3 Quantization and human visual model references

CHEN (W.H.) and PRATT (W.K.): Scene adaptive coder, *IEEE Trans. on Communications*, Vol. COM-32, pp. 225-232, 1984.

GRANRATH (D.J.): The role of human visual models in image processing, *Proceedings of the IEEE*, Vol. 67, pp. 552-561, 1981.

LOHSCHELLER (H.): Vision adapted progressive image transmission, *Proceedings of EUSIPCO*, Vol. 83, pp. 191-194, 1983.

LOHSCHELLER (H.) and FRANKE (U.): Colour picture coding – Algorithm optimization and technical realization, *Frequenze*, Vol. 41, pp. 291-299, 1987.

LOHSCHELLER (H.): A subjectively adapted image communication system, *IEEE Trans. on Communications*, Vol. COM-32, pp. 1316-1322, 1984.

PETERSON (H.A.) *et al*: Quantization of colour image components in the DCT domain, *SPIE/IS&T 1991 Symposium on Electronic Imaging Science and Technology*, 1991.

M.4 Arithmetic coding references

LANGDON (G.): An Introduction to Arithmetic Coding, *IBM J. Res. Develop.*, Vol. 28, pp. 135-149, 1984.

PENNEBAKER (W.B.), MITCHELL (J.L.), LANGDON (G.) Jr., and ARPS (R.B.): An Overview of the Basic Principles of the Q-Coder Binary Arithmetic Coder, *IBM J. Res. Develop.*, Vol. 32, No. 6, pp. 717-726, 1988.

MITCHELL (J.L.) and PENNEBAKER (W.B.): Optimal Hardware and Software Arithmetic Coding Procedures for the Q-Coder Binary Arithmetic Coder, *IBM J. Res. Develop.*, Vol. 32, No. 6, pp. 727-736, 1988.

PENNEBAKER (W.B.) and MITCHELL (J.L.): Probability Estimation for the Q-Coder, *IBM J. Res. Develop.*, Vol. 32, No. 6, pp. 737-752, 1988.

MITCHELL (J.L.) and PENNEBAKER (W.B.): Software Implementations of the Q-Coder, *IBM J. Res. Develop.*, Vol. 32, No. 6, pp. 753-774, 1988.

ARPS (R.B.), TRUONG (T.K.), LU (D.J.), PASCO (R.C.) and FRIEDMAN (T.D.): A Multi-Purpose VLSI Chip for Adaptive Data Compression of Bilevel Images, *IBM J. Res. Develop.*, Vol. 32, No. 6, pp. 775-795, 1988.

ONO (F.), YOSHIDA (M.), KIMURA (T.) and KINO (S.): Subtraction-type Arithmetic Coding with MPS/LPS Conditional Exchange, *Annual Spring Conference of IECED*, Japan, D-288, 1990.

DUTTWEILER (D.) and CHAMZAS (C.): Probability Estimation in Arithmetic and Adaptive-Huffman Entropy Coders, submitted to *IEEE Trans. on Image Processing*.

JONES (C.B.): An Efficient Coding System for Long Source Sequences, *IEEE Trans. Inf. Theory*,Vol. IT-27, pp. 280-291, 1981.

LANGDON (G.): Method for Carry-over Control in a Fifo Arithmetic Code String, *IBM Technical Disclosure Bulletin*, Vol. 23, No.1, pp. 310-312, 1980.

M.5 Huffman coding references

HUFFMAN (D.A.): A Method for the Construction of Minimum Redundancy codes, *Proc. IRE*, Vol. 40, pp. 1098-1101, 1952.

JA549
CONFIDENTIAL BUSINESS INFORMATION PHLPSKD_00047608