IN THE UNITED STATES DISTRICT COURT
FOR THE DISTRICT OF DELAWARE

BALDWIN GRAPHIC SYSTEMS, INC.,	)	
	)	
Plaintiff,	)	
	)	
v.	)	C.A. No. 06-77 (JJF)
	)	
FIBERWEB SIMPSONVILLE INC. and FIBERWEB, INC.	)	
	)	
Defendants.	)	

DECLARATION OF KEITH MCWHA IN SUPPORT OF BALDWIN GRAPHIC SYSTEMS, INC.'S OPENING MARKMAN BRIEF FOR U.S. PATENTS NOS. RE 35,976 AND 5,974,976

Keith McWha declares:

1. I make this declaration in support of plaintiff Baldwin Graphic Systems, Inc.'s Opening Markman Brief for U.S. Patents Nos. Re 35,976 and 5,974,976.

2. I am an attorney with the law firm of Morgan & Finnegan, LLP, counsel for plaintiff Baldwin Graphic Systems, Inc.

3. Attached as EXHIBIT A is a true and correct copy of U.S. Patent No. Re 35,976 ("the Reissue patent").

4. Attached as EXHIBIT B is a true and correct copy of U.S. Patent No. 5,974,976 ("the 976 patent").

5. Attached as EXHIBIT C is a true and correct copy of the Reissue Application Declaration dated April 10, 1995.

6. Attached as EXHIBIT D is a true and correct copy of the Reissue Application Declaration dated March 6, 1996.

7. Attached as EXHIBIT E is a true and correct copy of the Reissue Amendment After Final Rejection dated August 28, 1996.

8. Attached as EXHIBIT F is a true and correct copy of Excerpt Pages from The American Heritage Dictionary of the English Language: Fourth Edition, 2000.

9. Attached as EXHIBIT G is a true and correct copy of Excerpt Pages from The American Heritage Dictionary of the English Language: Fourth Edition, 2000.

10. Attached as EXHIBIT H is a true and correct copy of the '976 Patent File History Response to Office Action dated June 26, 1996.

I declare under penalty of perjury under the laws of the United States of America that, to the best of my knowledge, the foregoing is true and correct.

December 14, 2007



KEITH MCWHA

1335826

CERTIFICATE OF SERVICE

I, the undersigned, hereby certify that on December 14, 2007 I electronically filed the foregoing with the Clerk of the Court using CM/ECF, which will send notification of such filing(s) to the following:

Francis DiGiovanni
CONNOLLY BOVE LODGE & HUTZ, LLP

I also certify that copies were caused to be served on December 14, 2007 upon the following in the manner indicated:

BY E-MAIL

Francis DiGiovanni
CONNOLLY BOVE LODGE & HUTZ, LLP
The Nemours Building
1007 North Orange Street
Wilmington, DE 19899-2207

Michael E. Zeliger
Christopher Centurelli
KIRKPATRICK & LOCKHART NICHOLSON GRAHAM LLP
State Street Financial Center
One Lincoln Street
Boston, MA 02111-2950

/s/ Julia Heaney (#3052)

Julia Heaney (#3052)
jheaney@mnat.com

EXHIBIT A

US00RE35976E

United States Patent [19]

Gasparrini et al.

[11] E Patent Number: Re. 35,976

[45] Reissued Date of Patent: Dec. 1, 1998

[54] **PRE-PACKAGED, PRE-SOAKED CLEANING SYSTEM AND METHOD FOR MAKING THE SAME**

[75] Inventors: **Charles R. Gasparrini**, Port Chester, N.Y.; **Walter H. Cano**, Bridgeport, Conn.

[73] Assignee: **Baldwin Graphic Systems, Inc.**, Stamford, Conn.

[21] Appl. No.: **697,611**

[22] Filed: **Aug. 28, 1996**

Related U.S. Patent Documents

Reissue of:

[64] Patent No.: **5,368,157**
Issued: **Nov. 29, 1994**
Appl. No.: **145,881**
Filed: **Oct. 29, 1993**

U.S. Applications:

[63] Continuation of Ser. No. 419,752, Apr. 10, 1995, abandoned.

[51] **Int. Cl.**[6] **B65D 85/67**

[52] **U.S. Cl.** **206/209**; 206/410; 206/497; 53/431

[58] **Field of Search** 206/205, 207, 206/209, 210, 398, 401, 410, 497, 524.1, 524.3, 361; 15/256.5, 256.51; 101/425; 53/431, 581, 582

[56] **References Cited**

U.S. PATENT DOCUMENTS

2,189,556	2/1940	Younghusband .
3,014,579	12/1961	Lathrop .
3,669,255	6/1972	Raymus .
3,850,294	11/1974	Phillips et al. .
3,980,176	9/1976	Boggs .
4,135,448	1/1979	Moestue .
4,295,563	10/1981	Becker et al. .
4,344,361	8/1982	MacPhee et al. .
4,467,916	8/1984	Hedden et al. .
4,678,724	7/1987	Inagabi .
4,757,763	7/1988	MacPhee et al. .
4,934,391	6/1990	Futch et al. .
4,986,182	1/1991	Sawaguchi et al. .
4,998,984	3/1991	Clendon .
5,009,716	4/1991	Gerson .
5,012,739	5/1991	Loos et al. .
5,069,128	12/1991	Hara et al. .
5,104,567	4/1992	Staehr .
5,125,342	6/1992	Hara .
5,143,639	9/1992	Krawack .
5,176,080	1/1993	Gasparrini et al. .
5,188,754	2/1993	Weltman et al. .
5,194,173	3/1993	Folkard et al. .
5,207,160	5/1993	Harada .
5,320,217	6/1994	Lenarz .

FOREIGN PATENT DOCUMENTS

2004511	8/1971	Germany .

Primary Examiner—Jacob K. Ackun
Attorney, Agent, or Firm—Morgan & Finnegan, L.L.P.

[57] **ABSTRACT**

There is disclosed a pre-packaged, pre-soaked cleaning system for use to clean the cylinders of printing machines. The system includes a pre-soaked fabric roll saturated to equilibrium with low volatility organic compound solvent which is wrapped around a cylindrical core having open ends to form a roll. The saturated, wrapped fabric roll is inserted in a heat-sealable or heat-shrinkable and heat-sealable plastic sleeve, the sleeve being to intimate contact with the fabric roll after being subjected in heat-sealing or heat-shrinking and heat-sealing, thus permitting transporting and storage of the system until use without detrimentally affecting the cleaning ability of the fabric roll.

The system may also include a slotted canister in which the saturated wrapped roll is inserted before it is placed into the plastic sleeve and heat-sealed or heat-shrunken and heat-sealed thereon or end caps inserted in the open ends of the core.

A method for making the system is also disclosed.

32 Claims, 1 Drawing Sheet

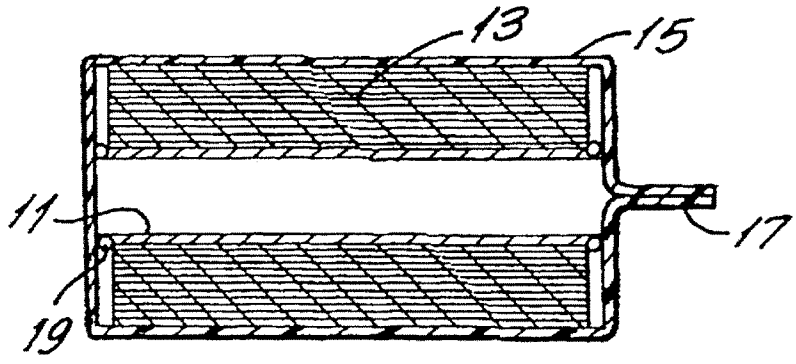

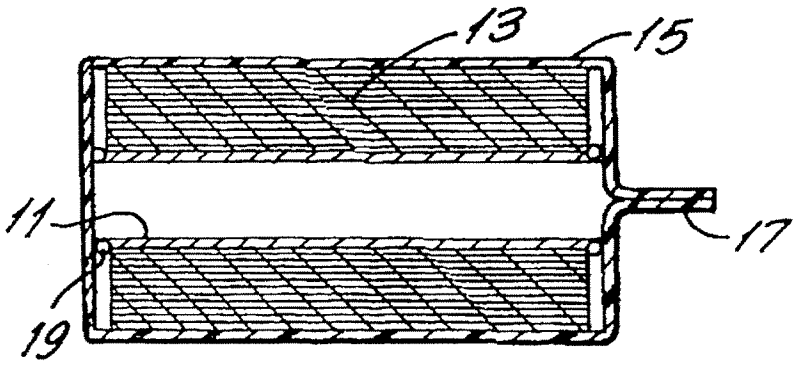

FIG.1

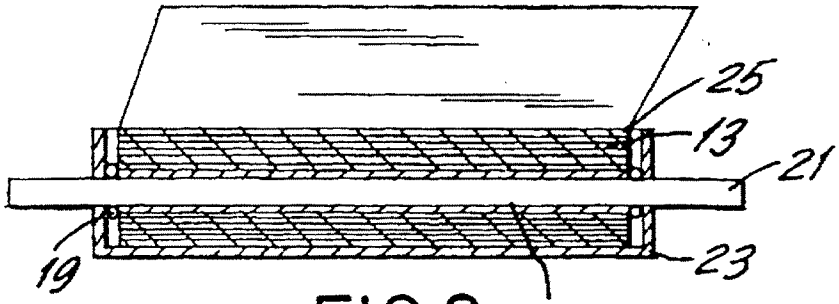

FIG.2

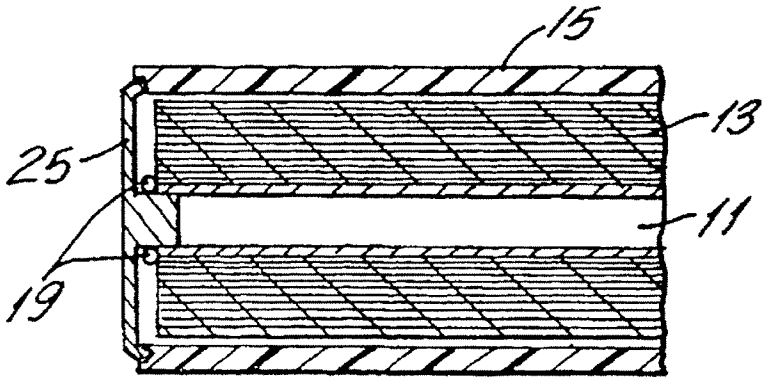

FIG.3

PRE-PACKAGED, PRE-SOAKED CLEANING SYSTEM AND METHOD FOR MAKING THE SAME

Matter enclosed in heavy brackets [ ] appears in the original patent but forms no part of this reissue specification; matter printed in italics indicates the additions made by reissue.

This is a continuation of now abandoned application Ser. No. 08/419,752, filed on Apr. 10, 1995 and which is an application for reissue of U.S. Pat. No. 5,365,157 of Nov. 29, 1994.

This invention relates to a cleaning system for use to clean the cylinders of printing machines. More particularly, the invention relates to a pre-packaged, pre-soaked blanket cleaning system to clean the cylinders of printing machines. While the invention is disclosed as it applies to the cleaning of the cylinders of printing machines for the sake of simplicity, it is to be understood that it can also be utilized to clean the cylinders of other types of machinery.

BACKGROUND OF THE INVENTION

A wide variety of blanket cleaning systems and apparatus employing the same to clean the cylinders of printing machinery are known. Typical blanket cleaning systems and apparatus employing the same, including cleaning blankets and cleaning solutions, are exemplified by U.S. Pat. No. 4,135,448 to Moestue which discloses a mechanism for cleaning a cylinder that is provided with a cleaning cloth which is wetted with a cleaning fluid or solution prior to its encountering the pressure roller; U.S. Pat. No. 4,934,391 to Futch et al. which shows a composition for ink removal that exhibits a low vapor pressure and which is a low vapor pressure organic compound; U.S. Pat. No. 4,986,182 to Sawaguchi et al. which discloses a cleaning apparatus in which a cleaning cloth is dampened by a liquid; U.S. Pat. No. 5,009,716 to Gerson which shows a wash for removing ink comprising a low volatile organic compound; U.S. Pat. No. 5,012,739 to Loos which discloses a washing device comprising a cleaning cloth dampened with a washing medium; and U.S. Pat. No. 5,069,128 to Hara which shows a device for cleaning a cylinder of a printing machine comprising a cleaning cloth impregnated with a cleaning liquid.

In addition, U.S. Pat. No. 5,104,567 to Staehr discloses a liquid for cleaning ink from printing machines; U.S. Pat. No. 5,125,342 to Hara shows a method for cleaning the cylinder of a printing machine; and U.S. Pat. No. 5,143,639 to Krawack discloses a cloth moistened with a low vapor pressure cleaning agent for removing ink; whereas Weltman et al., U.S. Pat. No. 5,188,754 disclose a cloth soaked with a cleaning formula, and U.S. Pat. No. 5,194,173 to Folkard et al. discloses a method for removing ink from printing machines. Still further, U.S. Pat. Nos. 4,344,361 and 4,757,763 to MacPhee et al. disclose automatic blanket cylinder cleaners provided with cleaner fabrics adapted to contact the blanket cylinders of printing machines. On the other hand, U.S. Pat. No. 5,175,080 to Gasparrini et al. discloses a cloth supply system for the blanket cylinder for use in printing presses.

While the above-mentioned Patents accomplish their purposes to a satisfactory extent, they still exhibit a variety of drawbacks. For example, they usually require apparatus, such as pumps, spray bars, manifold lines, valves and the like as part of the automatic blanket cleaning systems for introducing the cleaning solvents or solutions to the cleaning fabric just prior to actual use. Moreover, even in these cases, where the cleaning rolls or fabric rolls are pre-soaked or pre-wetted, the pre-soaking or pre-wetting must be accomplished just before use in order to minimize loss of cleaning solvent or solution in order to provide an effective blanket cleaning system.

There exists, therefore, a need for providing a pre-packaged, pre-soaked blanket cleaning system which does not exhibit the above-mentioned disadvantages and drawbacks. The present invention fulfills such a need.

BRIEF STATEMENT OF THE INVENTION

In accordance with the invention there is provided a pre-packaged, pre-soaked cleaning system for use with printing machines to clean the cylinders thereof comprising:

(1) a pre-soaked fabric roll saturated to equilibrium with low volatility organic compound solvent and which is disposed around an elongated, cylindrical core having open ends, and

(2) a heat-sealed or a heat-shrunken and heat-sealed plastic sleeve disposed around and in intimate contact with the fabric roll, whereby the pre-soaked, saturated fabric roll can be transported and stored vertically and/or horizontally until use without substantially disturbing the distribution of the solvent in the fabric roll and detrimentally affecting the cleaning ability of the fabric.

The invention also includes the method for making the inventive pre-packaged, pre-soaked cleaning system. Broadly, the method comprises contacting a strip of cleaning fabric with low volatility organic compound solvent which does not evaporate readily at ambient temperature and pressure and pre-soaking and saturating the fabric with the solvent, draining off excess solvent from the saturated fabric and obtaining a fabric saturated to equilibrium with solvent; wrapping the drained, saturated fabric around an elongated cylindrical core having open ends and forming a roll; disposing a heat-sealable plastic sleeve around the saturated, drained, wrapped fabric roll and subjecting the saturated, drained, wrapped fabric roll to a temperature sufficient to heat-seal the plastic sleeve around the saturated, drained, wrapped fabric roll in intimate contact with the fabric roll, whereby the pre-soaked, saturated fabric roll can be transported and stored vertically and/or horizontally until use without substantially disturbing the distribution of the solvent in the fabric roll and detrimentally affecting the cleaning ability of the fabric roll.

In a more specific aspect of the method, the strip of cleaning fabric is wrapped around the elongated cylindrical core to form a roll before contacting the strip of cleaning fabric with solvent.

In still another more specific aspect of the method, it includes subjecting the heat-sealable plastic sleeve to a vacuum and drawing the sleeve into intimate contact with the wrapped fabric roll after it has been disposed in the heat-sealable plastic sleeve.

In yet another more specific aspect of the method, the cleaning fabric is contacted with the low volatility organic compound solvent after the fabric is wrapped on the cylindrical core to form a roll by immersing the wrapped fabric roll in the solvent at ambient pressure and temperature and then drained at ambient pressure and temperature to remove excess solvent.

In yet another more specific aspect of the method, when the cleaning fabric is pre-soaked, either as a flat sheet or as a roll after it has been wrapped onto a cylindrical core, it is

preferable that the fabric be subjected to a vacuum in a vacuum chamber or the like in order to remove air therefrom before pre-soaking thereof takes place. In this connection, any suitable vacuum chamber or device can be employed.

Still further in another more specific aspect of the method, the plastic sleeve employed is not only heat-sealable but also heat-shrinkable and the sleeve is subjected to a temperature sufficient to heat-seal and heat-shrink the sleeve around the fabric roll.

In addition, the method, in another more specific aspect, includes the insertion of end caps in the open ends of the elongated cylindrical core and which extend over the peripheral edges of the fabric roll before the roll is inserted in the plastic sleeve.

Thus, in another embodiment of the pre-packaged, pre-soaked cleaning system according to the invention described above, the system includes a plastic sleeve disposed around and in intimate contact with the fabric roll which is not only heat-sealed, but also heat-shrunken.

Moreover, in a still further modified embodiment, the system includes end caps inserted in the open ends of the elongated cylindrical core which extend over the peripheral edges of the fabric roll.

In still a further modified embodiment of the pre-packaged and pre-soaked blanket cleaning system of the invention, it may also include a slotted canister in which the wrapped, drained, saturated roll is disposed. In such modified embodiment, the method of making the system is also modified to include an additional step of inserting the wrapped drained, saturated fabric roll into the slotted canister before introducing the same into the plastic sleeve.

THE DRAWINGS

In order to understand the invention more fully, reference is directed to the accompanying Drawing, which is to be taken in conjunction with following detailed description of the invention and in which Drawing:

FIG. **1** is a lateral, sectional, elevational view of a pre-packaged, pre-soaked cleaning system according to the invention;

FIG. **2** is a lateral, sectional, elevational view of the system shown in FIG. **1**, including the disposition of the pre-soaked, wrapped roll in a slotted canister before it is inserted in the heat-sealable sleeve and/or heat-sealable and heat-shrinkable sleeve shown in FIG. **1**; and

FIG. **3** is a partial, sectional, elevational, diagrammatic view of the system shown in FIG. **1** employing end caps disposed in the open ends of the elongated cylindrical core and extending over the peripheral edges of the fabric roll.

DESCRIPTION OF THE PREFERRED EMBODIMENTS

Referring now to FIG. **1**, a pre-packaged, pre-soaked cleaning system according to the invention comprises an elongated cylindrical core **11** made from, for example, relatively heavy cardboard of sufficient strength so that it can support thereon a pre-soaked fabric roll **13** of paper or cloth. On the other hand, if desired, the core may also be made of metal, such as steel, aluminum and the like. The fabric is pre-soaked and saturated to equilibrium with low volatility organic compound solvent, as described in more detail hereinbelow, before or after it is wrapped around the core **11** to form roll **13** in any convenient manner and the roll is then inserted in a sleeve **15** made of heat-sealable or heat-sealable and heat-shrinkable plastic material which is heat-sealed along its edge **17** or heat-shrunken and heat-sealed along its edge **17**, so that sleeve **15** is in intimate contact with the fabric roll **13**. The core **11** is also preferably provided with engagement means **19**, such as ball bearings or the like, or with other suitable means, for reception of a shaft **21** (FIG. **2**) located on an appropriate machine, such as a printing machine or the like (not shown) provided with a take-up roll to take-up cleaning fabric after it has achieved its cleaning function.

It has been surprisingly found that the pre-packaged, pre-soaked cleaning system described is a very stable system which can be transported and stored in a horizontal and/or vertical disposition until use without substantially disturbing the distribution of the solvent in the fabric roll and detrimentally affecting the cleaning ability of the fabric.

In the modified embodiment of the invention illustrated in FIG. **2**, the pre-soaked roll is inserted in a canister **23**, provided with a slit **25** through which a portion of the fabric roll **13** can be withdrawn before the assembly is sealed in the sleeve **15**.

In the modified embodiment as shown in FIG. **3**, the system of this invention is also preferably provided with end caps, such as end cap **25**, made of plastic or metal or the like disposed in the open ends of the core **11**. The end caps extend over the peripheral edges of the fabric roll **13** and the sleeve **15** may extend, as shown, over the edges of the end caps, or it may extend completely around the ends of the roll **13** as shown in FIG. **1**. Obviously, when a slotted canister **23** is employed, end caps will not be used. Moreover, it is to be understood that it is within the purview of this invention that the sleeve is sized conveniently to accommodate the roll to be covered thereby and to be drawn or shrunken into intimate contact with the roll and heat-sealed, as needed, whether it be open at both ends or at one end only.

The fabric from which the fabric roll is made may vary widely. For example, it may be made of paper or cloth. In those cases where a cloth fabric is employed, it may be a woven or a non-woven cloth fabric made of synthetic or natural fibers or mixtures of the same. Exemplative, but not limitative, of suitable synthetic fibers which may be used in the cloth fabrics are polyester fibers, rayon fibers, nylon fibers, and acrylic fibers and the like. Exemplative, but not limitative, of the natural fibers which may be employed are cotton fibers, wood pulp fibers and hemp fibers and the like.

In those cases where paper is employed as the fabric material, paper fabrics made from wood pulp modified chemically in accordance with paper manufacturing technology are suitable, for example.

On the other hand, no matter whether paper or cloth fabric is employed in carrying out the practice of this invention, it is preferred that the materials used therein exhibit high acceptability to being soaked or wetted by the low volatility organic compound solvent used to saturate the same. In this regard, it is preferred that the fabric employed be one which has a caliper thickness in a range of from about 0.003 [mils] *inch* to about [0.030 mils] *0.30 inch*, and preferably in a range of from about 0.008 [mils] *inch* to about 0.020 [mils] *inch*, and the ability when saturated with low volatility organic compound solvent to retain from about 0.05 to about 0.5 cc of solvent per in^2 of fabric determined by routine testing methods.

In general, woven and non-woven fabrics suitable for use in carrying out the practice of the invention have a basis weight in a range of from about 1.5 ounces per square yard to about 6.0 ounces per square yard, a caliper thickness in the range mentioned above, a tensile strength in the longitudinal (machine) direction in a range of from about 20 lbs.

per inch to about 200 lbs. per inch and in a width (cross) direction in a range of from about 15 lbs per inch to about 125 lbs. per inch.

Where paper is employed as a cleaning fabric in the system of this invention, it has a basis weight in a range of from about 40 lbs. to about 90 lbs., a caliper thickness in a range of from abut 0.003 [mils] *inch* to about 0.10 [mils] *inch*, a tensile strength in the longitudinal (machine) direction in a range of from about 20 lbs. per inch to about 80 lbs. per inch and in the width (cross) direction in a range of from abut 15 lbs. per inch to about 50 lbs. per inch, a porosity in a range of from about 1.0 second to about 10 seconds when subjected to 100 cc of low volatility organic compound solvent or water, and a stretchability in a range of from about 1.0 percent to about 6.0 percent, all determined by routine testing methods.

The low volatility organic compound solvent employed in carrying out the practice of this invention may vary widely and generally it includes at least one low volatility organic compound solvent which does not readily evaporate, as well as mixtures of the same with similar low volatile organic compound solvents or with normally volatile organic compound solvents. Exemplative, but not limitative, of suitable solvent materials of this type are organic compound solvents selected from vegetable oils and citrus oil and the like. Generally, such solvent materials have a volatility in a range of from about zero up to about 30.0 percent, and preferably a volatility in a range of from about zero percent to about 20.0 percent, determined by routine testing methods. It is to be understood that within the purview of this invention, such suitable solvents also include normally volatile organic compound solvents, that is, those which readily evaporate and which are selected from mineral spirits and aliphatic hydrocarbon solvents and the like. Such solvent materials generally have a volatility of from zero up to about 100 percent determined by routine testing methods.

A wide variety of heat-sealable and/or heat-shrinkable and heat-sealable plastic materials may be used for the plastic sleeves employed in the practice of this invention. For example, the sleeve may be made from polyethylenes, polyolefins, polyvinyl chlorides, and polyamides and the like. Generally, such materials are heat-sealable and/or heat-shrinkable and heat-sealable at a temperature in a range of from about 300° F. to about 400° F., and preferably in a range of from about 350° F. to about 375° F. Moreover, it is to be understood that within the purview of this invention, the heat-sealable and/or heat-shrinkable and heat-sealable sleeve may be made from heat-sealable and/or heat-shrinkable and heat-sealable paper.

The method for making a pre-packaged, pre-soaked cleaning system according to the invention comprises contacting a strip of cleaning fabric with low volatility organic compound solvent which does not evaporate readily at ambient pressure and temperature and pre-soaking and saturating the fabric with the solvent, draining of excess solvent from the saturated fabric and obtaining a fabric saturated to equilibrium with the solvent; wrapping the drained, saturated fabric around an elongated cylindrical core having open ends and forming a roll; disposing a heat-sealable plastic sleeve around the drained, saturated, wrapped fabric roll and subjecting the sleeve to a temperature sufficient to heat seal the plastic sleeve around the drained, saturated, wrapped fabric roll in intimate contact with the fabric roll, whereby the pre-soaked, saturated fabric roll can be transported and stored vertically and/or horizontally until use without disturbing the distribution of the solvent in the fabric roll and detrimentally affecting the cleaning ability of the fabric roll.

In a variation of the method, the fabric is preferably wrapped around the core before contacting the same with the solvent. Wrapping of the fabric on the cylindrical core can be done in any convenient manner and requires no special apparatus, a wide variety of roll making equipment being readily available for accomplishing the same.

Whether the fabric is contacted with solvent either before or after the roll has been formed, the roll is then inserted in a heat-sealable and/or heat-sealable and heat-shrinkable plastic sleeve and the sleeve is heat-sealed and/or heat-sealed and heat-shrunken at any appropriate temperature around the roll in intimate contact therewith. Generally, temperatures in a range of from about 300° F. to about 400° F. and preferably in a range of from about 350° F. to about 375° F. to accomplish the heat sealing and/or heat sealing and heat-shrinking of the saturated fabric roll in the plastic sleeve and bring the sleeve into intimate contact with the fabric roll, as mentioned above, may be employed.

In a variation of the method, it is preferred, especially where a heat-sealable plastic sleeve is employed, that once the fabric roll is inserted in the sleeve, the so assembled sleeve and roll be subjected to a vacuum which draws the heat-sealable plastic sleeve into intimate contact with the wrapped fabric roll, while at the same time exhausting any air from the interior of the sleeve, and then simply heat-sealing the sleeve around the roll by application of heat to the open peripheral edges of the sleeve. Known appropriate vacuum apparatus and heat-sealing apparatus may be used by simple adaptation of the same physically to accomplish apparatus for applying the vacuum and heat-sealing of the sleeve.

On the other hand, where a sleeve employed in carrying out the method in both heat-sealable and heat-shrinkable, then one or more small openings or vent holes (not shown) in the sleeve, preferably located near the open edges of the sleeve, are provided to permit exhaustion of air from the sleeve as heat-sealing and heat-shrinking is accomplished, the location of such opening or openings assuring that any such opening or openings will be closed during the heat-sealing and heat-shrinking of the sleeve.

In accordance with the method of this invention, contact between the fabric strip and the solvent can be achieved in a variety of ways. For example, if desirable, the appropriate solvent may be poured over the fabric in amounts sufficient to saturate the same while simply permitting excess solvent to drain off into a tray, or the solvent can be sprayed on the fabric. The saturation step can be carried out at ambient temperature and pressure and the excess, as mentioned, simply permitted to drain off for a period of time sufficient to obtain a fabric saturated to equilibrium with the solvent.

However, it is within the purview of the invention that the fabric strip be immersed or transported through a tank of appropriate solvent in a substantially horizontal direction either before or after, and preferably after, it has been wrapped on the core to form a roll. After saturation has taken place, the saturated fabric is preferably simply suspended in a position to permit excess solvent to drain off and be collected in a trap for reuse.

Wrapping of the fabric on the elongated cylindrical core to form a roll, as well as draining thereof, may also take place at ambient temperature and pressure. When saturation and wrapping to form a roll are completed, the roll is inserted in the heat-sealable or heat-shrinkable and heat-sealable plastic sleeve and the sleeve is heat-sealed and/or heat-shrunk and heat-sealed at a temperature sufficient to heat-seal or heat-shrink and heat-seal the sleeve around the

drained, saturated, wrapped fabric roll in intimate contact with the fabric roll. In this regard, the particular heat-shrinking and heat-sealing temperature will be dependent upon the type of heat-shrinkable and heat-sealable material utilized and may extend in a range of from about the softening temperature of such material up to about the decomposition temperature of such material. Care must be taken, however, to be sure that the particular temperature employed is not so high that it will have a deleterious effect on the saturated fabric roll disposed in the plastic sleeve.

In general, heat-shrinking and heat-sealing can be achieved at temperatures in a range of from about 300° F. up to about 400° F., and preferably are achieved at temperatures in a range of from about 350° F. up to about 375° F. and may be carried out in an oven, or under heat-radiating lamps.

The plastic sleeve will be sized so that the wrapped roll can be inserted therein with facility and the open edges of the sleeve then brought together in contact with each other in order to seal the same, while at the same time, being sized also so that when shrinking takes place, it will be brought into intimate contact with the fabric roll around which it is disposed.

In those cases where the saturated wrapped fabric roll is to be employed with a slotted canister, the roll is simply inserted in the canister with a portion thereof protruding through the slot and the canister is provided with knock-out end portions which may be inserted therein after insertion of the roll, such end portions simply being removed when the roll is to be disposed on an appropriate shaft of a printing apparatus or the like in order to permit insertion of the shaft through the core of the roll, as well as removal of the shaft from the core. Moreover, the canister may be made from metals, such as light gauge steel, aluminum and the like or from cardboard or from plastic materials, such as polyethylenes, polyolefins, polyvinyl chlorides, polyamides, and the like.

In those instances where end caps, such as end cap **25**, are employed in making the pre-packaged, pre-soaked cleaning system of this invention, the end caps, which may be made of the same materials mentioned above for the canister **23**, are simply inserted in the open ends of the cylindrical core after the wrapping, saturation and draining steps of the method have been accomplished.

It is to be understood that within the context of this invention, the terminology "saturated to equilibrium" as it is used in connection with the saturation of the fabric and/or fabric roll with solvent means that after draining the fabric and/or fabric roll retains therein sufficient solvent in an amount to wet the fabric to the extent that it imparts efficient cleaning ability to the fabric to clean cylinders of apparatus, such as printing machinery, and the fabric has retained therein after draining from about 0.05 to about 0.5 cc of solvent per in^2 of fabric.

The so-made pre-packaged, pre-soaked blanket cleaning system of this invention can be employed on any printing apparatus, simply by modifying the apparatus to provide it with a shaft which can be inserted through the core and also a take-up roll which is employed to take up the used portion of the cleaning fabric after it has carried out its cleaning function. This is a distinct advantage of the cleaning system of this invention since it eliminates the need for complex apparatus, such as pumps, spray bars, manifold lines, valves and the like, especially as part of the automatic blanket cleaning systems used on printing machinery to introduce cleansing solvents or solutions to the cleaning fabrics just prior to use.

In addition, the cleaning system of this invention provides numerous other advantages. For example, it is relatively simple in construction, employs readily available materials and can be made in a relatively simple and forward manner without resort to highly complex and expensive procedures which necessitate the use of elaborate machinery. Numerous other advantages of this invention will be readily apparent to those skilled in the art.

Accordingly, this invention is not to be limited to the embodiments disclosed and illustrated herein, except as defined in the appended claims.

What is claimed is:

1. A pre-packaged, pre-soaked cleaning system for use to clean the cylinders of printing machines comprising:

(1) a pre-soaked fabric roll saturated to equilibrium with low volatility organic compound solvent disposed around an elongated cylindrical core having open ends, and

(2) a heat-sealed plastic sleeve disposed around and in intimate contact with said fabric roll, whereby the pre-soaked, saturated fabric roll can be transported and stored vertically and horizontally until use without substantially disturbing the distribution of said solvent in said fabric roll and detrimentally affecting the cleaning ability of the fabric.

2. A pre-packaged, pre-soaked cleaning system as defined in claim **1** wherein the fabric is a cloth fabric.

3. A pre-packaged, pre-soaked cleaning system as defined in claim **2** wherein the cloth comprises non-woven synthetic fiber material.

4. A pre-packaged, pre-soaked cleaning system as defined in claim **2** wherein the cloth comprises woven synthetic fiber material.

5. A pre-packaged, pre-soaked cleaning system as defined in claim **2** wherein the cloth comprises non-woven natural fiber material.

6. A pre-packaged, pre-soaked cleaning system as defined in claim **2** wherein the cloth comprises woven, natural fiber material.

7. A pre-packaged, pre-soaked cleaning system as defined in claim **2** wherein the cloth comprises a mixture of synthetic and natural fiber materials.

8. A pre-packaged, pre-soaked cleaning system as defined in claim **2** wherein the fabric has a basis weight in a range of from about 1.5 ounces per square yard to about 6.0 ounces per square yard, a caliper thickness in a range of from about 0.003 **[**mils**]** *inch* to about 0.30 **[**mils**]** *inch*, a tensile strength in the longitudinal direction in a range of from about 20 lbs. per inch to about 200 lbs. per inch and in a width direction in a range of from about 15 lbs. per inch to about 125 lbs. per inch.

9. A pre-packaged, pre-soaked cleaning system as defined in claim **1** wherein the fabric is paper fabric.

10. A pre-packaged, pre-soaked cleaning system as defined in claim **9** wherein the paper fabric has a basis weight in a range of from about 40 lbs. to about 90 lbs., a caliper thickness in a range of from about 0.003 **[**mils**]** *inch* to about **[0.010** mils**]** *0.10 inch*, a tensile strength in the longitudinal direction in a range of from about 20 lbs. per inch to about 80 lbs. per inch and in a width direction in a range of from about 15 lbs. per inch to about 50 lbs. per inch, a porosity in a range of from about 1.0 second to about 10 seconds, and a stretchability in a range of from about 1.0 percent to about 6.0 percent.

11. A pre-packaged, pre-soaked cleaning system as defined in claim **1** wherein the low volatility organic compound solvent comprises at least one organic solvent com-

pound which does not readily evaporate and is selected from the group consisting of vegetable oils and citrus oils having a volatility in a range of from about zero up to about 30 percent.

12. A pre-packaged, pre-soaked cleaning system as defined in claim **1** wherein the low volatility organic compound solvent comprises at least one organic solvent compound which readily evaporates and which is selected from mineral spirits and aliphatic hydrocarbon solvents and a volatility in a range of from about zero up to about 100 percent.

13. A pre-packaged, pre-soaked cleaning system as defined in claim **1** wherein the heat-sealed plastic sleeve is comprised of a heat-sealable plastic material selected from the group consisting of heat sealable polyethylenes, heat-sealable polyolefins, polyvinyl chlorides, and heat-sealable polyamides.

14. A pre-packaged, pre-soaked cleaning system as defined in claim **1** wherein the heat-sealed plastic sleeve is also heat-shrinkable and is comprised of a heat-sealable and heat-shrinkable plastic material selected from the group consisting of heat-sealable and heat-shrinkable polyethylenes, heat-sealable and heat-shrinkable polyolefins, heat-sealable and heat-shrinkable polyvinyl chlorides, and heat-sealable and heat-shrinkable polyamides.

15. A pre-packaged, pre-soaked cleaning system according to claim **1** including a canister disposed between the pre-soaked fabric roll and the heat-sealed plastic sleeve.

16. A pre-packaged, pre-soaked cleaning system according to claim **1** including end caps located in the open ends of the elongated cylindrical core and extending over the peripheral edges of the fabric roll.

17. A method for making a pre-packaged, pre-soaked cleaning system comprising contacting a strip of cleaning fabric with low volatility, organic compound solvent which does not evaporate readily at ambient temperature and pressure and pre-soaking and saturating said fabric with said solvent, draining off excess solvent from said saturated fabric and obtaining a fabric saturated to equilibrium with said solvent; wrapping the drained, saturated fabric around an elongated cylindrical core having open ends and forming a roll; disposing a heat-sealable plastic sleeve around the drained, saturated, wrapped fabric roll and subjecting said plastic sleeve to a temperature sufficient to heat-seal said plastic sleeve around said drained, saturated, wrapped fabric roll in intimate contact with the fabric roll, whereby the pre-soaked, saturated fabric roll can be transported and stored vertically and horizontally until use without substantially disturbing the distribution of said solvent in said fabric roll and detrimentally affecting the cleaning ability of the fabric roll.

18. A method for making a pre-packaged, pre-soaked cleaning system as defined in claim **17** wherein the strip of cleaning fabric is wrapped around the elongated cylindrical core to form a roll before contacting said strip of cleaning fabric with the solvent.

19. A method for making a pre-packaged, pre-soaked cleaning system according to claim **17** including subjecting the heat-sealable plastic sleeve to a vacuum and drawing the heat-sealable plastic sleeve into intimate contact with the wrapped fabric roll after disposing the wrapped fabric roll in said heat-sealable plastic sleeve and before heat-sealing said plastic sleeve.

20. A method for making a pre-packaged, pre-soaked cleaning system according to claim **17** including inserting the wrapped fabric roll into a slotted canister before it is introduced into the plastic sleeve.

21. A method for making a pre-packaged, pre-sealed cleaning system according to claim **17** including inserting end caps in the open ends of the elongated cylindrical core which extend over the peripheral edges of the fabric roll before said fabric roll is inserted into the plastic sleeve.

22. A method for making a pre-packaged, pre-soaked cleaning system as defined in claim **17** wherein the cleaning fabric is immersed at ambient temperature and pressure in the low volatility organic compound solvent to saturate said fabric and then drained at ambient temperature and pressure to remove excess solvent before said fabric is wrapped on the cylindrical core to form a roll.

23. A method for making a pre-packaged, pre-soaked cleaning system as defined in claim **17** wherein the cleaning fabric is immersed at ambient temperature and pressure in the low volatility organic compound solvent to saturate said fabric and then drained at ambient temperature and pressure to remove excess solvent after said fabric is wrapped on the cylindrical core to form a roll.

24. A method according to claim **17** wherein the cleaning fabric is paper.

25. A method for making a pre-packaged, pre-soaked cleaning system comprising contacting a strip of cleaning fabric with low volatility, organic compound solvent which does not evaporate readily at ambient temperature and pressure and pre-soaking and saturating said fabric with said solvent, draining off excess solvent from said saturated fabric and obtaining a fabric saturated to equilibrium with said solvent; wrapping the drained, saturated fabric around an elongated cylindrical core and forming a roll; disposing a heat-shrinkable and heat-sealable plastic sleeve around the drained, saturated, wrapped fabric roll and subjecting said plastic sleeve to a temperature sufficient to heat-shrink and heat-seal said plastic sleeve around said drained, saturated, wrapped fabric roll in intimate contact with the fabric roll, whereby the pre-soaked, saturated fabric roll can be transported and stored vertically and horizontally until use without substantially disturbing the distribution of said solvent in said fabric roll and detrimentally affecting the cleaning ability of the fabric roll.

26. A method for making a pre-packaged, pre-soaked cleaning system as defined in claim **25** wherein the plastic sleeve is heat-shrunken and heat-sealed at a temperature in a range of from about 300° F. to about 400° F.

27. A method for making a pre-packaged, pre-soaked cleaning system as defined in claim **25** wherein the plastic sleeve is heat-shrunken and heat-sealed at a temperature in a range of from about 350° F. to about 375° F.

28. A pre-packaged, pre-soaked cleaning system for use to clean the cylinders of printing machines comprising:

(1) a pre-soaked fabric roll saturated to equilibrium with low volatility organic compound solvent disposed around a core, and

(2) a sealed sleeve disposed around and in contact with said fabric roll, whereby the pre-soaked, saturated fabric roll can be transported and stored vertically and horizontally until use without substantially disturbing the distribution of said solvent in said fabric roll and detrimentally affecting the cleaning ability of the fabric.

29. A pre-packaged, pre-soaked cleaning system as defined in claim 28 wherein the sealed sleeve can be opened or removed from the fabric roll for use of said fabric roll and including in combination therewith means for positioning said pre-packaged, pre-soaked cleaning system adjacent a cylinder to be cleaned.

30. A pre-packaged, pre-soaked cleaning system as defined in claim 1 wherein the sealed sleeve can be opened

or removed from the fabric roll for use of said fabric roll and including means locating said fabric roll adjacent to and operatively associated with a cylinder to be cleaned.

31. A pre-packaged, pre-soaked cleaning system as defined in claim 28, in combination with mounting means for mounting the pre-soaked fabric roll in a position to clean a cylinder while the fabric is in contact with and being fed past said cylinder.

32. A pre-packaged, pre-soaked cleaning system for use to clean the cylinder of printing machines comprising in combination:

(1) a pre-soaked fabric roll saturated to equilibrium with cleaning solvent disposed around a core, said fabric roll having a sealed sleeve which can be opened or removed from said fabric roll for use of said fabric roll, disposed therearound, and said system including

(2) means for locating said fabric roll adjacent to and operatively associated with a cylinder to be cleaned.

* * * * *

EXHIBIT B

US005974976A

United States Patent [19]

Gasparrini et al.

[11] Patent Number: 5,974,976

[45] Date of Patent: Nov. 2, 1999

[54] **CLEANING SYSTEM AND PROCESS FOR MAKING SAME EMPLOYING REDUCED AIR CLEANING FABRIC**

[75] Inventors: **C. Robert Gasparrini**, Port Chester, N.Y.; **Walter H. Cano**, Bridgeport, Conn.

[73] Assignee: **Baldwin Graphic Systems, Inc.**, Stamford, Conn.

[21] Appl. No.: **08/924,495**

[22] Filed: **Aug. 27, 1997**

Related U.S. Application Data

[63] Continuation of application No. 08/431,799, May 1, 1995, abandoned.

[51] **Int. Cl.**[6] **B41C 33/00**

[52] **U.S. Cl.** **101/483**; 101/424

[58] **Field of Search** 101/483, 424, 101/423, 425; 100/37, 47

[56] **References Cited**

U.S. PATENT DOCUMENTS

2,189,556	2/1940	Younghusband	206/209
3,014,579	12/1961	Lathrop	401/196
3,066,876	12/1962	Verdier	100/161
3,669,255	6/1972	Raymus	206/59 F
3,850,294	11/1974	Phillips et al.	206/205
3,980,176	9/1976	Boggs	206/392
4,135,448	1/1979	Moestue	101/425
4,295,563	10/1981	Becker et al.	206/205
4,344,361	8/1982	MacPhee et al.	101/425
4,467,916	8/1984	Hedden et al.	206/410
4,678,724	7/1987	Inagabi	229/4.5
4,712,472	12/1987	Meisen et al.	100/37
4,757,763	7/1988	MacPhee et al.	101/425
4,934,391	6/1990	Futch et al.	134/40
4,986,182	1/1991	Sawaguchi et al.	101/483
4,998,984	3/1991	McClendon	206/205
5,009,716	4/1991	Gerson	134/40
5,012,739	5/1991	Loos et al.	101/425
5,104,567	4/1992	Staehr	252/174.17
5,125,342	6/1992	Hara	400/425
5,143,639	9/1992	Krawack	252/162
5,176,080	1/1993	Gasparrini et al.	101/425
5,188,754	2/1993	Weltman et al.	252/162
5,194,173	3/1993	Folkard et al.	252/170
5,207,160	5/1993	Harada	101/425
5,320,217	6/1994	Lenarz	206/209
5,368,157	11/1994	Gasparrani et al.	206/209
5,392,701	2/1995	Schiel	100/161

FOREIGN PATENT DOCUMENTS

0256950	2/1988	European Pat. Off. .
0348609	1/1990	European Pat. Off. .
2004511	8/1971	Germany .
3907612	9/1990	Germany .
9511584	5/1995	WIPO .

OTHER PUBLICATIONS

European Search Report, Jan. 8, 1997.
English language translation of DE 3907612 A1.

Primary Examiner—Edgar Burr
Assistant Examiner—Anthony H. Nguyen
Attorney, Agent, or Firm—Morgan & Finnegan, L.L.P.

[57] **ABSTRACT**

A cleaning system for a printing press using pre-soaked, reduced volume of air in cleaning fabric and a method for making the system are disclosed. The system includes a cleaning fabric treated to reduce the amount of air volume the cleaning fabric contains. The cleaning fabric is saturated to functional equilibrium with a low volatility organic compound solvent. The cleaning fabric is wrapped around an elongated core to form a fabric roll. The saturated, wrapped fabric roll may be used to clean a cylinder of a printing press. The saturated, wrapped fabric roll may be inserted in a sealable sleeve, the sealable sleeve being in contact with the fabric roll and then sealed, thus permitting transporting and storage of the system until use without detrimentally affecting the cleaning ability of the fabric.

26 Claims, 2 Drawing Sheets

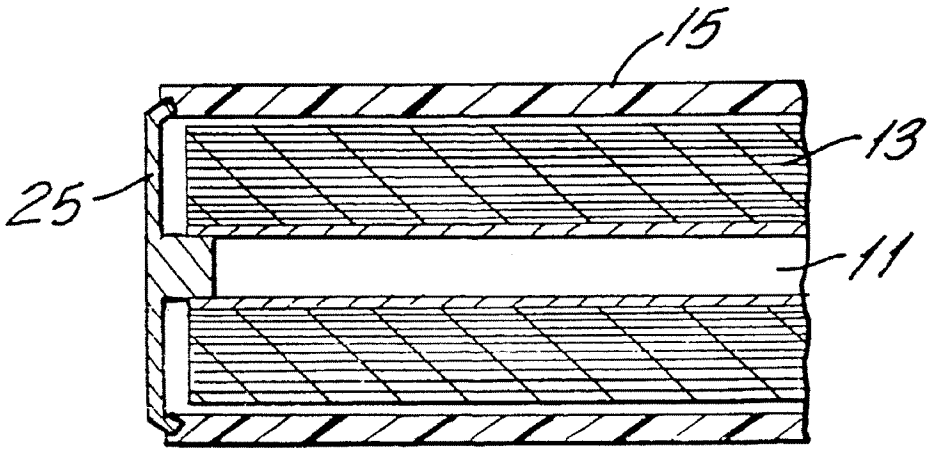

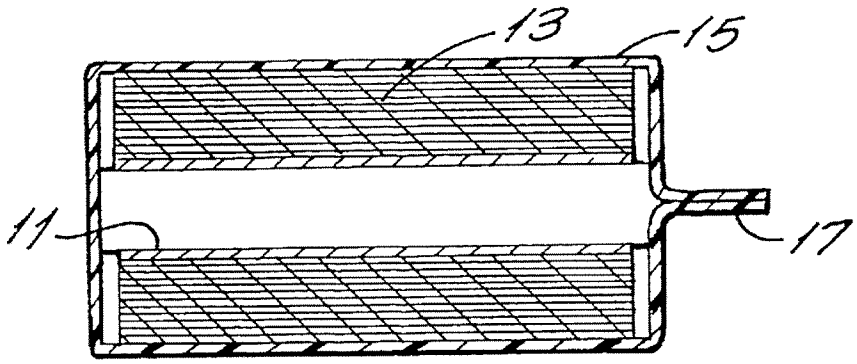

FIG.1

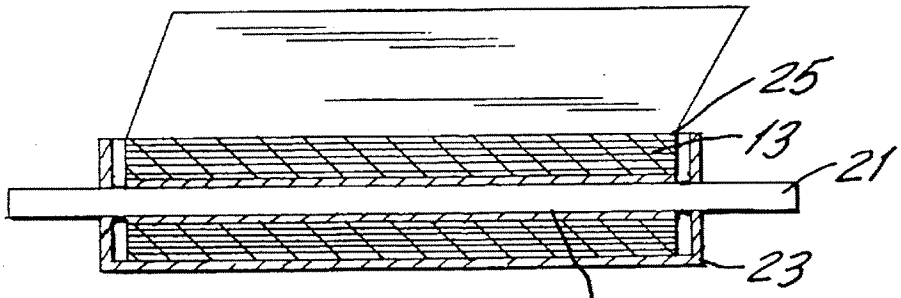

FIG.2

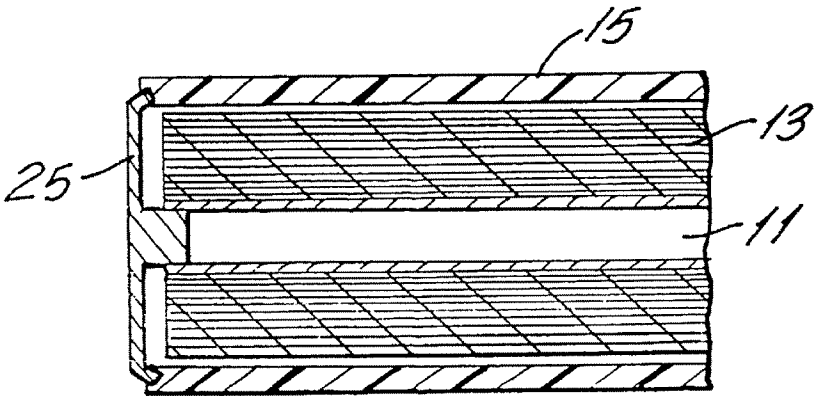

FIG.3

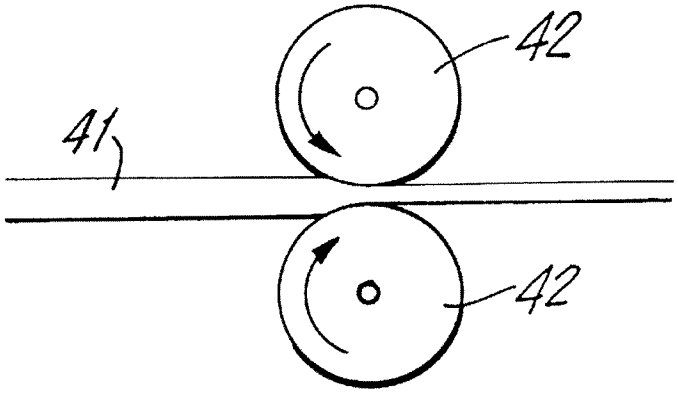

FIG.4

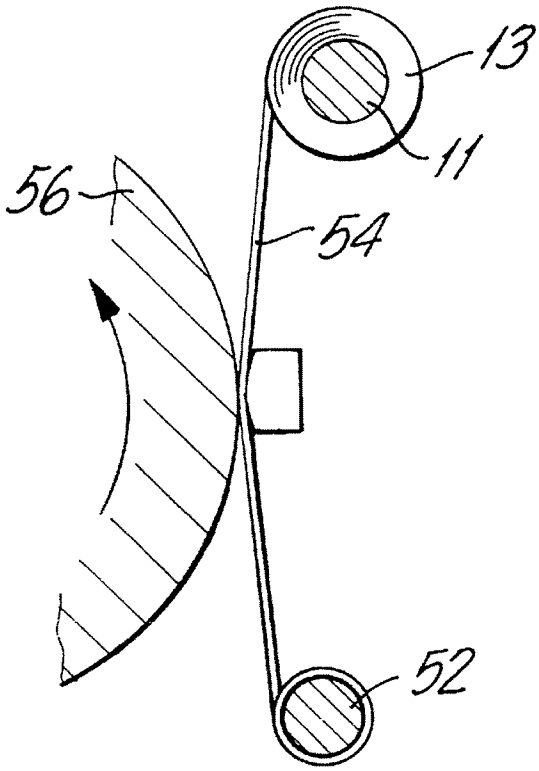

FIG.5

CLEANING SYSTEM AND PROCESS FOR MAKING SAME EMPLOYING REDUCED AIR CLEANING FABRIC

This is a continuation of application Ser. No. 08/431,799, filed on May 1, 1995, now abandoned.

FIELD OF THE INVENTION

This invention relates to a cleaning system employing a fabric with a reduced volume of air for use to clean the cylinders of a printing machine. More particularly, the invention relates to an improved pre-soaked cleaning system employing a fabric with a reduced volume of air to clean the cylinders of a printing press. While the invention is described as it applies to the cleaning of the cylinders of printing machines for the sake of simplicity, it is to be understood that it can be utilized to clean the cylinders of other types of machinery.

BACKGROUND OF THE INVENTION

A wide variety of blanket cleaning systems and apparatus employing the same to clean the cylinders of printing presses are known. Typical blanket cleaning systems and apparatus employing the same, including cleaning blankets and cleaning solutions, are exemplified by U.S. Pat. No. 4,135,448 to Moestue which is directed to a mechanism for cleaning a cylinder that is provided with a cleaning cloth which is wetted with a cleaning fluid or solution prior to its encountering the pressure roller; U.S. Pat. No. 4,934,391 to Futch et al. is directed to a composition for ink removal that exhibits a low vapor pressure and which is a low vapor pressure organic compound; U.S. Pat. No. 4,986,182 to Sawaguchi et al. is directed to a cleaning apparatus in which a cleaning cloth is dampened by a liquid; U.S. Pat. No. 5,009,716 to Gerson is directed to a wash for removing ink comprising a low volatile organic compound; U.S. Pat. No. 5,012,739 to Loos is directed to a washing device comprising a cleaning cloth dampened with a washing medium and U.S. Pat. No. 5,069,128 to Hara is directed to a device for cleaning a cylinder of a printing machine comprising a cleaning cloth impregnated with a cleaning liquid.

In addition, U.S. Pat. No. 5,104,567 to Staehr is directed to a liquid for cleaning ink from printing machines; U.S. Pat. No. 5,125,342 to Hara is directed to a method for cleaning the cylinder of a printing machine; and U.S. Pat. No. 5,143,639 to Krawack is directed to a cloth moistened with a low vapor pressure cleaning agent for removing ink; whereas U.S. Pat. No. 5,188,754 to Weltman et al. is directed to a cloth soaked with a cleaning formula and U.S. Pat. No. 5,194,173 to Folkard et al. is directed to a method for removing ink from printing machines. Still further, U.S. Pat. Nos. 4,344,361 and 4,757,763 to MacPhee et al. is directed to automatic blanket cylinder cleaners provided with cleaning fabrics adapted to contact the blanket cylinders of printing presses. On the other hand, U.S. Pat. No. 5,175,080 to Gasparrini et al. is directed to a cloth supply system for the blanket cylinder for use in printing presses.

Still further, U.S. Pat. No. 5,320,217 to Lenarz is directed to a sealed envelope which contains a moistened pad that functions as a swab. The pad is secured to the envelope by an intermediate line seal. Consequently, when the top of the envelope is removed, the pad is exposed. Since the pad is still captively held to the remainder of the envelope, the liquid on the pad may be dispensed by holding the clean, dry, bottom of the envelope. Thus, the pad functions as a swab and the remainder of the envelope functions as the applicator and the reservoir. Alternatively, U.S. Pat. No. 4,998,984 to McClendon is directed to a pre-packaged single use disposable wiper pad or towelette that is saturated with a disinfecting liquid and the pad is effective to disinfect inanimate surfaces. The pad is of a size which fits into a pocket or purse and makes it convenient to carry, while posing no problem in disposing of the same, such as by flushing in a toilet.

U.S. Pat. No. 4,679,724 to Inagaki is directed to a water-proof container having a cylindrical base member made of paper which is surrounded by a double-wall heat-shrinkable plastic film covering the paper base member and having at least one portion heat-sealed to close the paper base member entirely within the plastic film and lid connected to the base member for closing at least one open end of a container shape formed by the paper base member.

U.S. Pat. No. 4,467,916 to Hedden et al. is directed to a package of wound glass fiber strand from which the glass fiber strands can be removed more efficiently for feeding into processing operations. The wound package of glass fiber strands is a package of superimposed annular layers of glass fiber strands having a central longitudinal, cylindrical cavity about which the strands are wound and having an outer cylindrical surface and a substantially flat circular top and bottom section. The package is covered with a stretchable polymeric film and at least one free end of the glass fiber strand extends into the central cavity for removal from the interior to the exterior of the package. U.S. Pat. No. 4,295,563 to Becker et al. is directed to an article of manufacture comprising a hollow rod of longitudinally gathered tubes of cellulose hydrate-based materials the hollow rod having a latent water content of between about 25% and 100% by weight based on the total weight of the hollow rod and being free of chemical anti-bacteriocidal agent; a closed, substantially gas impermeable packaging sheath having a hollow interior chamber therein and in which the hollow rod is positioned so that this rod is completely enveloped by the packaging sheath which is made of a flexible film of material that is substantially impermeable to gases; and a protective gas essentially fills the remaining portion of the hollow interior chamber of the sheath so that the gas protects the hollow rod against the formulation of aerobic microorganisms on the water-containing cellulose hydrate material.

Still further, U.S. Pat. No. 3,980,176 to Boggs is directed to a high speed yarn take-up system which consists of a pneumatic injector nozzle rotably mounted off-center of a single fluted rotating screw. Yarn is injected into the area exposed at the trailing edge of the screw and compressed and moved forward in a compression chamber by the feeding of the screw. A plastic tube is continuously formed around the compression chamber to receive the yarn mass as it discharges, thus forming a tube of indefinite unlimited length and from ¼ to 4 inches or larger in diameter. The tube may contain a single end or multiple ends of yarn which may be removed from the tube at high speed by simply slitting the plastic as the yarn is pulled from the package. Alternatively, U.S. Pat. No. 3,850,294 to Phillips et al. is directed to a package of roving unsized continuous filaments of glass, the package being saturated with water which maintains the filaments in group orientation.

U.S. Pat. No. 3,014,579 to Lathorp is directed to a disposable cleaning device which consists of a capsule containing a plurality of applicators and which may be employed in many and various uses. The applicators enclosed within the capsule comprise a central core of sponge or sponge rubber having a wad or pad of absorbent material, such as cotton or the like, wrapped around the core.

The core is saturated with suitable material and the cotton wrap, for example, provides a vehicle through which the material in the sponge rubber core is absorbed from the core and applied to a given usage.

Still further, U.S. Pat. No. 2,189,556 to Younghusband is directed to a pipe cleaner formed with a pliable metal member, such as a spindle or length of wire or the like. Attached to that member and extending through at its length are tufts of fabric or other material capable of absorbing liquid. These tufts are impregnated or saturated with a liquid solvent solution and the impregnating pipe cleaners are then packed in a container and sealed to prevent evaporation.

While the above-mentioned patents accomplish their purposes to a satisfactory extent, they still exhibit a variety of drawbacks. For example, they usually require apparatus, such as pumps, spray bars, manifold lines, valves, and the like as part of the automatic blanket cleaning systems for introducing the cleaning solvents or solutions to the cleaning fabric just prior to actual use. Moreover, even in these cases, where the cleaning rolls or fabric rolls are pre-soaked or pre-wetted, the pre-soaking or pre-wetting, must be accomplished just before use in order to minimize loss of cleaning solvent or solution in order to provide an effective cylinder cleaning system.

U.S. Pat. No. 5,368,157 to Gasparrini et al., the present applicants, attempted to overcome these problems. That patent is directed to a pre-packaged, pre-soaked cleaning system for use with printing machines or the like to clean the cylinders of such machines and which comprises a pre-soaked fabric roll saturated to functional equilibrium with low volatility organic compound solvent and which is disposed around an elongated, cylindrical core and enclosed in a sealed sleeve which if desired may be a heat-sealed or a heat-shrunken and heat-sealed plastic sleeve disposed around and intimate contact with the fabric roll, whereby the pre-soaked saturated fabric roll can be transported and stored vertically and/or horizontally until use without substantially disturbing the distribution of the solvent in the fabric roll and detrimentally effecting the cleaning ability of the fabric.

While the invention disclosed in U.S. Pat. No. 5,368,157 works for its intended purpose, improvements have been discovered. When the patented product is placed in the vertical position, the solvent would shift downward in the evacuated package. When the package is restored to the horizontal position, the solvent migrates back towards equilibrium in the roll. This migration is caused by air pockets in the fabric of the roll that have not been completely evacuated.

There exists, therefore, a need for providing a prepackaged, pre-soaked blanket cleaning system which minimizes the above-mentioned disadvantages and drawbacks. The present invention fulfills such a need.

SUMMARY OF THE INVENTION

Briefly described, the present invention is directed to a new and improved system for cleaning a cylinder of a printing press using a pre-soaked fabric having a reduced volume of air which prevents and/or reduces the migration of the solvent in the fabric roll and increases the length of the cleaning fabric without increasing the diameter of the fabric roll. In accordance with a preferred embodiment, the cleaning system includes a core. Preferably, but not necessarily, the core is hollow and cylindrically shaped. A cleaning fabric with a reduced air content is wrapped around the core to form a fabric roll. A wetting agent comprising a low volatility cleaning compound is present in the cleaning fabric in an amount sufficient to saturate the cleaning fabric to functional equilibrium.

Advantageously, the fabric roll is sealed by a sleeve disposed around the cleaning fabric. The sleeve may also be in intimate contact with the fabric roll. This allows the cleaning fabric to be transported and stored both vertically and horizontally until use without substantially disturbing the distribution of the solution in the fabric and detrimentally affecting the cleaning ability of the fabric.

In a preferred embodiment, the air content of the cleaning fabric is reduced by between about 1% to about 50%. This acts to reduce the thickness of the fabric. It also acts to increase the length of fabric while not increasing the diameter of the fabric roll.

Another preferred embodiment further includes a means for positioning the fabric adjacent to a cylinder to be cleaned. This means may also place the cleaning fabric operatively associated with the cylinder or in a position to clean the cylinder while the fabric is in contact with and fed past the cylinder.

The invention also includes a method for making the inventive cleaning system. Broadly, the method comprises reducing the air in a strip of cleaning fabric. The strip of cleaning fabric is placed in contact with a low volatility organic compound solvent which does not evaporate readily at ambient temperature and pressure and saturating the cleaning fabric with the solvent. Solvent is applied by measured absorption to the fabric to obtain a fabric saturated to functional equilibrium with the solvent. The saturated cleaning fabric is wrapped around a core to form a pre-soaked fabric roll.

In a more specific aspect of the method, the fabric roll is sealed to allow transportation and storage, both vertically and horizontally, until use without substantially disturbing the distribution of the solvent in the fabric roll and detrimentally affecting the cleaning ability of the fabric roll.

In still another aspect of the method, the content of air in the cleaning fabric is reduced by calendaring.

In yet another more specific aspect of the method, the content of air in the cleaning fabric is reduced by reducing the thickness of the cleaning fabric by between about 10% to about 50%.

In yet another more specific aspect of the method, the amount of air in the cleaning fabric is reduced by between about 1% and about 50%.

It will be appreciated by those skilled in the art that the foregoing summary of the invention and the following detailed description are merely exemplary and explanatory of the present invention, but are not intended to be restrictive thereof or limiting of the advantages which can be achieved by the invention or various combinations thereof. The accompanying drawings referred to herein and constituting in part hereof, illustrate preferred embodiments of the invention and, together with the detailed description, serve to explain the principles of the invention.

BRIEF DESCRIPTION OF THE DRAWINGS

In order to understand the invention more fully, reference is directed to the accompanying drawings, which is to be taken in conjunction with the following description of the invention and in which Drawings:

FIG. **1** is a lateral, sectional, elevational view of a cleaning system employing a reduced volume of air in cleaning fabric according to the invention;

FIG. **2** is a lateral, sectional, elevational view of the system shown in FIG. **1**, including the disposition of the presoaked, wrapped roll in a slotted canister before it is inserted in the sealable sleeve and/or sealable and shrinkable sleeve shown in FIG. **1**;

FIG. **3** is a partial, sectional, elevational, diagrammatic view of the system shown in FIG. **1** employing end caps disposed in the open ends of the elongated core and extending over the peripheral edges of the fabric roll;

FIG. **4** is a sectional view of a fabric undergoing calendaring; and

FIG. **5** is a partial cross-sectional view of a cylinder to be cleaned and a pre-soaked cleaning system employing a reduced volume of air in fabric according to the present invention.

DESCRIPTION OF THE PREFERRED EMBODIMENTS

Referring now to FIG. **1**, a cleaning system employing a reduced volume of air in cleaning fabric with a longer length but not an increased diameter according to the present invention comprises an elongated core **11** made from, for example, relatively heavy cardboard of sufficient strength so that it can support thereon a pre-soaked fabric roll **13**. Additionally, if desired, the core **11** can be made from any other suitable material including, but not limited to, plastic or metal, such as steel, aluminum, and the like. Core **11** may have open ends to allow engagement on an appropriate machine. Core **11** may also be a shaft. Preferably, as shown in FIG. **2**, core **11** is completely hollow to allow a shaft, rod, or the like **21** to be inserted within core **11** to provide engagement. The core **11** is also preferably provided with engagement means (not shown), for reception of a shaft **21** located on an appropriate machine (not shown), such as a printing machine or the like, provided with a take-up shaft **52** to take-up the cleaning fabric after it has achieved its cleaning function. Alternatively, shaft **21** may be equipped with engagement means (not shown) for engagement of a core **11**. Preferably, the core **11** is cylindrical in shape. However, the core **11** may be any other appropriate shape.

The machine further includes a means for properly positioning the cleaning fabric to allow cleaning of the cylinder. Several ways exist for this result to be achieved. For example, the cleaning fabric **54** may be positioned so that it is adjacent the cylinder **56** to be cleaned. In another example, the cleaning fabric **54** may be adjacent to and operatively associated with the cylinder **56** to be cleaned. In yet another possible embodiment, the cleaning fabric **54** is operatively associated with the cylinder **56** to clean the cylinder **56** as the fabric **54** is in contact with and fed past the cylinder **56**. One possible arrangement is shown in FIG. **5**. The person of ordinary skill in the art will be aware of many other configurations that will work for the invention's intended purpose without undue experimentation. These examples are merely exemplary and are not meant to limit how the invention may be used.

The fabric is presoaked and saturated with a low volatility organic compound solvent, as described in more detail hereinbelow, before or after it is wrapped around the core **11** to form roll **13** in any convenient matter. Solvent is applied in measured amounts so that the fabric is presoaked to functional equilibrium. The preferred method of applying solvent is measured absorption of solvent. If desired, an excess amount of solvent can be applied and the excess solvent drained or spun off to obtain functional equilibrium rather than the use of measured absorption. In a preferred embodiment, the roll **13** is then inserted into a sealable sleeve **15** which is to be sealed in any convenient and appropriate matter. Preferably, sleeve **15** is made of heat-sealable or heat-sealable and shrinkable plastic material which is heat sealed along its edge **17** or shrunken and heat-sealed along its edge **17**. The sealing of sealable sleeve **15** preferably places sleeve **15** in intimate contact with fabric roll **13**.

In the modified embodiment of the invention illustrated in FIG. **2**, the pre-soaked fabric roll is inserted in a sleeve or canister **23**, provided with a slit **24** through which a portion of the fabric roll **13** can be withdrawn before the assembly is sealed in the sleeve.

In yet another modified embodiment, as shown in FIG. **3**, the system of this invention is also preferably provided with end caps, such as end cap **25**, made of plastic or metal or like material disposed in the open ends of the core **11**. The end caps extend over the peripheral edges of the fabric roll **13** and the sleeve **15** may extend, as shown, over the edges of the end caps or it may extend completely around the ends of the roll **13** as shown in FIG. **1**. Obviously, when a slotted canister **23** is employed end caps will not be used. Moreover, it is to be understood that it is within the purview of this invention that the sleeve is sized conveniently to accommodate the roll to be covered thereby and to be drawn or shrunken into intimate contact with the roll and sealed, as needed, whether it be open at both ends or at one end only.

The fabric from which the fabric roll is made may vary widely. For example, it may be made of paper, cloth, film, a mixture of wood pulp and polyester, such as DuPont SONTARA, or any other suitable material. In those cases where a cloth fabric is employed, it may be a woven or non-woven cloth fabric made of synthetic or natural fibers or mixtures of the same. Exemplative, but not limitative, of suitable synthetic fibers which may be used in the cloth fabrics are polyester fibers, rayon fibers, nylon fibers, and acrylic fibers and the like. Exemplative, but not limitative, of the natural fibers which may be employed are cotton fibers, wood pulp fiber, hemp fibers and the like.

In those cases where paper is employed as the fabric material, paper fabrics made from wood pulp modified chemically in accordance with paper manufacturing technology are suitable.

On the other hand, no matter what fabric is employed in carrying out the practice of this invention, it is preferred that the materials used therein exhibit high acceptability to being soaked or wetted by a solvent. Preferably, this solvent is a low volatility organic compound solvent used to saturate the fabric. In this regard, it is preferred that the fabric employed be one which has a caliper thickness in a range from about 0.003 inches to about 0.030 inches, and preferably in a range from about 0.007 inches to about 0.020 inches, and the ability, when saturated with low volatility organic compound solvent, to retain from about 0.02 cc to about 0.5 cc of solvent per in^2 of fabric determined by routine testing methods.

In general, woven and non-woven fabrics suitable for use in carrying out the practice of the invention have a basic weight in a range of from about 1.5 ounces per square yard to about 6.0 ounces per square yard, a caliper thickness in the range mentioned above, a tensile strength in the longitudinal (machine) direction in a range of from about 20 lbs. per inch to about 200 lbs. per inch and in a width (cross) direction in a range from about 15 lbs. per inch to about 125 lbs. per inch.

When paper is employed as a cleaning fabric in the system of this invention, it preferably has a basis weight in a range

of from about 40 lbs. to about 90 lbs., a caliper thickness in a range of from about 0.003 inches to about 0.010 inches, a tensile strength in the longitudinal (machine) direction in a range of from about 20 lbs. per inch to about 80 lbs. per inch and in the width (cross) direction in a range of from about 15 lbs. per inch to about 50 lbs. per inch, a porosity in a range of from about 1.0 second to about 10 seconds when subjected to 100 cc of low volatility organic compound solvent or water, and a stretch ability in a range of from about 1.0 percent to about 6.0 percent all determined by routine testing methods.

Regardless of the type of material used as the cleaning fabric, the fabric must have a reduced air content. In one embodiment, all of the air is removed from the fabric. In another embodiment, between about 1% and about 50% of the air is removed. One method of accomplishing this reduced air content is to start with a fabric with substantially no or little air content. Alternatively, if the fabric initially has a substantial air content, this air content can be removed from the fabric to produce a reduced air content fabric. The reduced air content provides for an absorptive solvent amount and a reduced displacement of solvent during storage and thus less of a shift or no shift in the fabric roll's center of gravity and allows for better and more even distribution of the solvent within the fabric roll **13**.

The preferred, but not exclusive, method of reducing the air content in the fabric is calendaring. Calendaring is demonstrated in FIG. **4**. A fabric **41** is calenderized by running it through at least a pair of rollers **42**. The at least a pair of rollers **42** compress the fabric. Preferably, but not necessarily, the temperature of the at least a pair of rollers **42** is hotter than room temperature. Alternatively, the temperature of the at least a pair of rollers **42** is at about ambient temperature or less than ambient temperature. It has been found that the wettability and the distribution of the solvent is very good in the calenderized fabric.

The amount of calendaring necessary to remove the air from the fabric is dependent on the fabric. For example, if standard cloth of 0.012 inches is used, such as DuPont's SONTARA, it is preferred that the fabric is calendared to reduce its thickness to about 0.0085 inches. This reduces the air content in the cloth by about 30%.

A surprising and unexpected result of the calendaring process is that the length of fabric is increased while not increasing the diameter of the fabric roll **13**. This provides an important advantage because cleaners are designed to accept fabric rolls of up to a certain diameter. For example, one of the assignor's automatic blanket cleaners will only accept a cleaning fabric roll having a diameter of about 2.75 inches. Because of this extra length, a fabric roll of calenderized cloth will be usable for more washes than a regular fabric roll of the same fabric having the same diameter. This has two advantages. First, the cost per wash will be reduced. Second, the pressmen need not change a roll of cleaning fabric as often since there are more washes per roll of cloth. This will allow for the press to be run more often. These advantages can be realized regardless of whether the fabric is pre-soaked and/or prepackaged.

The amount of increase in the length of cloth due to calendaring is dependent on the fabric used and the amount of calendaring. For example when DuPont SONTARA cloth having a thickness of about 0.012 inches and a length of about 12 yards is placed about a core, having a diameter of about 1.5 inches, the fabric roll has a diameter of 2.75 inches. After being calendared the cloth has a thickness of about 0.0085 inches and a length of about 16 yards and still has a diameter of about 2.75 inches when placed on the same core. Thus, in this situation, calendaring results in an about 25% to about 30% increase in the length of the fabric without increasing the diameter of fabric roll **13**. Depending on the type of fabric and amount of calendaring, results may range from about a 10% increase to about a 50% increase.

The low volatility organic compound solvent employed in carrying out the practice of this invention may vary widely and generally it includes at least one low volatility, organic compound solvent which does not readily evaporate at ambient temperature and pressure, as well as mixtures of the same with similar low volatile organic compound solvents or with normally volatile organic compound solvents. Exemplative, but not limitative, of suitable solvent materials of this type are organic compound solvents selected from vegetable oils and citrus oils and the like. Generally, such solvent materials have a volatile organic content in a range of from about zero up to about 30.0 percent, and preferably a volatile organic content in a range of from about zero percent to about 20.0 percent, determined by routine testing methods. It is to be understood that within the purview of this invention, such suitable solvents also include normally volatile organic compound solvents, that is, those which readily evaporate and which are selected from mineral spirits and aliphatic hydrocarbon solvents and the like. Such solvent materials generally have a volatile organic content of from zero up to about 100 percent determined by routine testing methods. Preferably, a low volatility solvent will be used because the lower the volatility of the solvent, the longer the fabric stays wet since less solvent evaporates. The closer the volatility is to zero percent, the longer the life of the presoaked fabric on the printing press.

For the embodiments involving heat-sealing and/or heat-sealing and shrinking, a wide variety of heat-sealable and/or shrinkable and heat-sealable plastic materials may be used for sealable sleeve **15**. For example, the sleeve may be made from polyethylenes, polyolefins, polyvinyl chlorides, and polyamides and the like. Generally, such materials are heat-sealable and/or shrinkable and heat-sealable at a temperature in a range of from about 300° F. to about 400° F., and preferably in a range of from about 350° F. to about 375° F. Moreover, it is to be understood that within the purview of this invention, the heat-sealable and/or shrinkable and heat-sealable sleeve may be made from heat-sealable and/or shrinkable and heat-sealable paper.

The method of making a cleaning system employing a reduced air content cleaning fabric according to the invention comprises obtaining a strip of reduced air content cleaning fabric. For purposes of this invention, the term reduced air content cleaning fabric additionally encompasses a fabric having no or substantially no air content. One method of obtaining a reduced air content cleaning fabric is to make or purchase a cleaning fabric with substantially little or no air content. Alternatively, a strip of fabric with a substantial air content can have its air content reduced. Preferably, the method of reducing the air content of the fabric is calendaring. The strip of reduced air content cleaning fabric is brought in contact with a low volatility, organic compound solvent which does not evaporate readily at ambient pressure and temperature and presoaking and saturating the cleaning fabric to functional equilibrium. This is preferably done by measured absorption. Excess solvent, if any, may be removed from the cleaning fabric, preferably by draining or spinning the excess solvent, to obtain a fabric saturated to functional equilibrium with the solvent. The cleaning fabric is wrapped around an elongated core forming a fabric roll.

In one variation of the method, the fabric is preferably wrapped around the core prior to contacting the same with the solvent. In yet another embodiment, the fabric is wrapped around the core after being saturated with the cleaning solvent. It is also within the invention to saturate the fabric with solvent both prior to and after forming the fabric roll **13**. The wrapping of the fabric can be done in any convenient manner and requires no special apparatus, a wide variety of roll making equipment being readily available for accomplishing the same.

In a preferred embodiment, the method further comprises the step of sealing the fabric roll so that it can be transported and stored vertically and horizontally until use without substantially disturbing the distribution of said solvent in said fabric roll and detrimentally affecting the cleaning ability of the fabric. The preferred, but not exclusive, method of sealing the fabric roll is the use of a sealable sleeve disposed around the fabric roll. The preferred type of sealable sleeve is a heat-sealable plastic sleeve around the wrapped fabric roll and placed in intimate contact with the fabric roll and subjecting the sleeve to a temperature sufficient to seal the plastic sleeve around the wrapped fabric roll. In order to use this type of sealant, the fabric roll is inserted in a heat-sealable and/or shrinkable and heat-sealable plastic sleeve and the sleeve is heat-sealed and/or heat-sealed and shrunken at any appropriate temperature around the roll in intimate contact therewith. Generally, temperatures in a range of from about 300° F. to about 400° F., and preferably in a range from about 350° F. to about 375° F., are used to accomplish the heat-sealing and/or heat-sealing and heat-shrinking of the saturated fabric roll in the plastic sleeve and bringing the sleeve into intimate contact with the fabric roll.

In a variation of the method, it is preferred, especially where a heat-sealable plastic sleeve is employed, that once the fabric roll is inserted in the sleeve, the so assembled sleeve and fabric roll be subjected to a vacuum which draws the heat-sealable plastic sleeve into intimate contact with the fabric roll, while at the same time exhausting any air from the interior of the sleeve, and then simply heat-sealing the sleeve around the roll by application of heat to the open peripheral edges of the sleeve. Known appropriate vacuum apparatus and heat-sealing apparatus may be used by simple adaption of the same physically to accomplish apparatus for applying the vacuum and heat-sealing of the sleeve.

On the other hand, when a sleeve employed in carrying out the method is both heat-sealable and shrinkable, then one or more small openings or vent holes (not shown) in the sleeve, preferably located near the open edges of the sleeve, are provided to permit exhaustion of air from the sleeve as heat-sealing and shrinking is accomplished, the location of such opening or openings assuring that any such opening or openings will be closed during the heat-sealing and heat-shrinking of the sleeve.

In accordance with the method of this invention, contact between the fabric strip and the solvent can be achieved in a variety of ways by a variety of means for introducing the solvent including spray nozzles, pouring containers, and immersing tanks. For example, if desirable, the appropriate solvent may be poured over the fabric in amounts sufficient to saturate the same while simply permitting excess solvent to drain off into a tray, or the solvent can be sprayed on the fabric. The saturation step can be carried out at ambient temperature and pressure and the excess, as mentioned above, simply permitted to drain off for a period of time sufficient to obtain a fabric saturated to functional equilibrium. Any other appropriate method of removing the excess solvent to obtain a fabric saturated to functional equilibrium can be used.

It is within the purview of an embodiment of the invention that the fabric strip be immersed or transported through a tank of appropriate solvent in a substantially horizontal direction either before or after, and preferably before, it has been wrapped on the core to form a roll. After saturation has taken place, the saturated fabric is preferably simply suspended in a position to permit excess solvent to drain off or run through two rollers and be collected in a tray for reuse.

Additionally, in accordance with a preferred embodiment of the method, the air content of the fabric must be reduced or eliminated. Any appropriate reduction of air content step may be employed. The preferred method of reducing the air content of the fabric is calendaring. A fabric is calenderized by running it through at least a pair of rollers. The at least a pair of rollers compresses the fabric. Preferably, but not necessarily, the temperature of the pair of rollers is either hotter than room temperature or at or cooler than room temperature. A surprising and unexpected result of the removal of the air content is that the length of fabric is increased while not increasing the diameter of the fabric roll.

The wrapping of the fabric on the elongated core to form a roll, as well as measured absorption and/or draining or other removal thereof, may also take place at ambient temperature and pressure. When the saturation of the fabric and wrapping of the fabric to form a fabric roll are completed, the fabric roll may be inserted in a sleeve. Preferably, the fabric roll is inserted in a heat-sealable and shrinkable plastic sleeve and the sleeve is heat-sealed and/or shrunk and heat-sealed at a temperature sufficient to heat-seal the sleeve around and in contact with the saturated, wrapped fabric roll. In this regard, the particular shrinking and heating-sealing temperature will be dependent upon the type of shrinkable and heat-sealable material utilized. Care must be taken, however, to be sure that the particular temperature employed is not so high that it will have a deleterious affect on the saturated fabric roll disposed in the plastic sleeve.

In general, heat-sealing can be achieved at temperatures in a range of from about 300° F. up to about 400° F., and preferably are achieved at temperatures in a range of from about 350° F. up to about 375° F. and may be carried out in an oven, or under heat-radiating lamps.

The sleeve will be sized so that the wrapped fabric roll can be inserted therein with facility and the open edges of the sleeve then brought together in contact with each other in order to seal the same, while at the same time, being sized also so that if and when shrinking takes place, it will be brought into contact with the fabric roll around which it is disposed.

In those cases where the saturated, wrapped fabric roll is to be employed with a slotted canister **23**, the roll is simply inserted in the canister **23** with a portion thereof protruding through the slot and the canister **23** is provided with a knock-out end portions which may be inserted therein after insertion of the roll, such end portions simply being removed when the roll is to be disposed on an appropriate shaft of a printing apparatus or the like in order to permit insertion of the shaft from the core. Moreover, the canister **23** may be made from metals, such as light gauge steel, aluminum and the like, or from cardboard or from plastic materials, such as polyethylenes, polyolefins, polyvinyl chlorides, polyamides, and the like.

In those instances where end caps, such as end caps **25**, are employed in making the cleaning system employing a reduced air cleaning fabric, the end caps, which may be made of the same materials mentioned above for the canister

23, are simply inserted in the open ends of the core 11 after wrapping, saturation and removal of excess solvent of the method has been accomplished.

It is to be understood that within the context of this invention, the terminology "saturated to functional equilibrium" as it is used in connection with the saturation of the fabric and/or fabric roll with solvent means that after applying a measured amount of solvent or removing the excess solvent from the fabric and/or fabric roll, the fabric and/or fabric roll retains therein sufficient solvent or wetting agent in an amount to wet the fabric to the extent that it imparts efficient cleaning ability to the fabric to clean cylinders of apparatus, such as printing machinery, and the fabric has preferably retained therein after measured absorption or removal of the excess, if any removal is required, from about 0.02 cc to about 0.5 cc of solvent per in^2 of fabric.

In one embodiment, the so made cleaning system employing a reduced air content fabric of this invention can be employed on any printing apparatus simply by modifying the apparatus to provide it with at least one shaft which can be inserted through the open ends of the core. In a preferred embodiment, a single shaft is inserted through a hollow core. Additionally, the printing apparatus may be provided with a take-up roll which is employed to take up the used portion of the cleaning fabric after it has carried out its cleaning function. This is a distinct advantage of the cleaning system of this invention since it eliminates the need for complex apparatus, such as pumps, spray bars, manifold lines, valves and the like, especially as part of the automatic blanket cleaning systems used on printing machinery to introduce cleansing solvents or solutions to the cleaning fabric just prior to use.

In addition, the cleaning system of this invention provides numerous other advantages. For example, it is relatively simple in construction, employs readily available materials, and can be made in a relatively simple and forward manner without resort to highly complex and expensive procedures which necessitate the use of elaborate machinery. Additionally, the invention is an alternative to the invention discussed in U.S. Pat. No. 5,368,157 to Gasparrini et al. in that it provides for less solvent displacement during storage and thus less of a change in the fabric roll's center of gravity. Additionally, the use of a cleaning fabric with a reduced volume of air on the present and conventional systems not involving presoak techniques will have the advantage of having more fabric on a cleaning fabric supply roll of a given diameter. Numerous other advantages of this invention will be readily apparent to those skilled in the art.

It will remain understood by those skilled in the art that the present invention in its broader aspects is not limited to the particular embodiments shown and described herein, and that variations may be made which are within the scope of the accompanying claims without departing from the principles of the invention and without sacrificing its chief advantages.

We claim:

1. A device for cleaning a cylinder of a printing press comprising:

a reduced air content cleaning fabric having an air content by volume of 1 to 50 percent; and

a solvent comprising a low volatility cleaning compound which does not readily evaporate at ambient temperature, and means for introducing said solvent being into said reduced air content cleaning fabric in an amount sufficient for cleaning said cylinder of a printing press.

2. The device for cleaning the cylinders of a printing press as defined in claim 1 further comprising a sealed sleeve disposed around and in contact with said fabric, said sealed sleeve containing substantially no air.

3. The device for cleaning the cylinders of a printing press as defined in claim 2 wherein said sealed sleeve is comprised of a heat-sealable plastic material selected from the group consisting of heat sealable polyethylene, heat-sealable polyolefins, polyvinyl chlorides, and heat-sealable polyamides.

4. The device for cleaning the cylinders of a printing press as defined in claim 2 wherein said sealed sleeve is shrinkable and is comprised of a heat-sealable and shrinkable plastic material selected from the group consisting of heat-sealable and shrinkable polyethylenes, heat-sealable and shrinkable polyolefins, heat-sealable and shrinkable polyvinyl chlorides, and heat-sealable and shrinkable polyamides.

5. The device for cleaning the cylinders of a printing press as defined in claim 2 further comprising a canister disposed between said fabric and said sleeve.

6. The device for cleaning the cylinders of a printing press as defined in claim 2 including a core which comprises an elongated cylinder having open end, said device further comprising end caps located in the open end of said core.

7. The device for cleaning the cylinders of a printing press as defined in claim 1 wherein the thickness of said fabric has been reduced by between about 10% to about 50%.

8. The device for cleaning the cylinders of a printing press as defined in claim 1 wherein said fabric is a cloth fabric.

9. The device for cleaning a cylinder of a printing press as defined in claim 1 wherein said fabric retains from about 0.02 to about 0.5 cc of said solvent per square inch of said fabric.

10. The device for cleaning the cylinders of a printing press as defined in claim 1 wherein said fabric comprises a mixture of wood pulp and polyester.

11. The device of claim 1 wherein said fabric has a length that is about 10 to 50 percent greater than the length of non-reduced air content fabric having an equal diameter about said core.

12. The device for cleaning a cylinder of a printing press as defined in claim 1 further comprising a means for positioning said fabric adjacent to said cylinder to be cleaned.

13. The device for cleaning a cylinder of a printing press as defined in claim 1 further comprising a mounting means for mounting said core and said fabric in a position to clean said cylinder while said fabric is in contact with and is fed past said cylinder.

14. A method for making a cleaning system comprising:

reducing air content of a strip of cleaning fabric by 1 to 50 percent to form a strip of reduced air cleaning fabric; and

contacting said strip of reduced air content cleaning fabric with a low volatility, organic compound solvent which does not evaporate readily at ambient temperature and pressure and pre-soaking and saturating said reduced air content cleaning fabric with said solvent.

15. The method as defined in claim 14 further comprising the step of sealing said wrapped, saturated cleaning fabric roll in a substantially liquid impervious material so that said wrapped, saturated cleaning fabric roll can be transported and stored vertically and horizontally until use without substantially disturbing the distribution of said solvent in said fabric roll and detrimentally affecting the cleaning ability of said fabric.

16. The method as defined in claim 15 wherein said step of sealing comprises disposing a sealable sleeve around the

wrapped, saturated fabric roll and sealing said sealable sleeve around said wrapped, saturated fabric roll.

17. The method as defined in claim **16** wherein said step of sealing comprises subjecting said sealable sleeve to a vacuum to remove substantially all of the air from said sealable sleeve before sealing said sleeve.

18. The method as defined in claim **14** including providing an elongated core wherein said strip of cleaning fabric is wrapped about said elongated core prior to contacting said strip of cleaning fabric with said solvent.

19. The method as defined in claim **14** wherein the step of contacting said strip comprises saturating said fabric beyond equilibrium with excess solvent and removing said solvent so that said fabric is in functional equilibrium.

20. The method as defined in claim **19** wherein said solvent is removed until said fabric retains from about 0.02 to about 0.5 cc of solvent per square inch of said fabric.

21. The method as defined by claim **14** wherein said step of contacting said strip comprises bringing a measured amount of said solvent in contact with said strip of cloth and allowing said measured amount of solvent to be absorbed.

22. The method as defined in claim **21** wherein said fabric absorbs from about 0.02 to about 0.5 cc of said solvent per square inch of said fabric.

23. The method as defined in claim **14** further comprising the steps of:

(a) unwinding at least a portion of said cleaning fabric from said fabric roll;

(b) placing said at least a portion of said cleaning fabric in contact with a cylinder to be cleaned; and

(c) taking-up said at least a portion of said cleaning fabric on a take-up shaft.

24. The method as defined in claim **14** wherein the step of reducing air content of said strip of cleaning fabric comprises calendaring said cleaning fabric.

25. The method as defined in claim **14** wherein the step of reducing air content of said strip of cleaning fabric is accomplished by reducing the thickness of said cleaning fabric by between about 10% to about 50%.

26. The method as defined in claim **14** wherein said step of reducing air content of said strip of cleaning fabric further comprises the step of increasing the length of said cleaning fabric by at least about 25% without substantially effecting the diameter of said fabric roll after the cleaning fabric has been wound about a core.

* * * * *

UNITED STATES PATENT AND TRADEMARK OFFICE

CERTIFICATE OF CORRECTION

PATENT NO. : 5,974,976
DATED : August 27, 1997
INVENTOR(S) : C. Robert Gasparrini et al.

It is certified that error appears in the above-identified patent and that said Letters Patent is hereby corrected as shown below:

Column 11,
Line 61, "of" has been replaced with -- reduced by --.

Signed and Sealed this

Twenty-second Day of October, 2002

Attest:

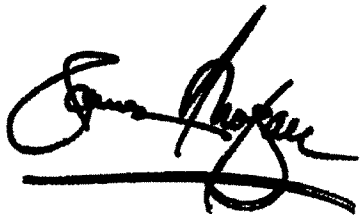

Attesting Officer

JAMES E. ROGAN
Director of the United States Patent and Trademark Office

EXHIBIT C

PATENT



Docket No. 0140-4124

REISSUE PATENT APPLICATION
IN THE UNITED STATES PATENT AND TRADEMARK OFFICE

In re Reissue of:

U.S. Patent No. 5,368,157
Serial No.: 145,881
Filing Date:October 29, 1993
Issue Date: November 29, 1994

Serial No.: To be assigned

Filing Date: To be assigned

Inventor: Charles R. Gasparrini et al.

For: PRE-PACKAGED, PRE-SOAKED CLEANING SYSTEM AND METHOD FOR MAKING THE SAME

REISSUE APPLICATION DECLARATION AND POWER OF ATTORNEY BY INVENTORS

HON. COMMISSIONER OF PATENTS AND TRADEMARKS
Washington, D.C. 20231

Sir:

As a below named inventor, I hereby declare that:

1. My residence, post office address and citizenship are as stated below next to my name and I believe I am an original and joint inventor of the subject matter which is described and claimed in letters patent number 5,368,157 granted on November 29, 1994, and in the foregoing specification and for which invention I solicit a reissue patent.

2. I hereby state that I have reviewed and understand the contents of the above identified specification, including the claims.

3. I acknowledge the duty to disclose information which is material to the examination of this application

namely, information where there is a substantial likelihood that a reasonable examiner would consider it important in deciding whether to allow the application to issue as a patent.

4. In compliance with this duty there is attached an Information Disclosure Statement in accordance with 37 CFR 1.98.

5. I hereby claim no foreign priority benefits under Title 35, United States Code, § 119 of any foreign application(s) for patent or inventor's certificate.

6. As an original and joint inventor, I, Charles R. Gasparrini believe the original patent 3,568,157 to be partly inoperative and invalid, and thus defective, because of error which occurred without any deceptive intent on my part and which first came to my attention on or about January 4, 1995, when considering the original patent and its relationship to other technical programs of Baldwin Graphic Systems, Inc., the assignor. The reasons for this belief are that I claimed less than I had a right to claim in the patent and that as claimed, the claims fail to cover the inventive subject matter of my pre-packaged, pre-soaked cleaning system in the broadest scope to which I am entitled in that (1) they fail to recite the sleeve which is disposed around and in contact with the pre-soaked fabric roll as simply a sealed or sealable sleeve in contact with the fabric rather than a heat-sealed and/or heat-sealed and heat

shrunk plastic sleeve which is in intimate contact with the pre-soaked fabric roll as recited in the patent; (2) they fail to recite the core around which the pre-soaked fabric roll is disposed as simply a core rather than as an elongated cylindrical core having open ends as recited in the claims of the patent; (3) they fail to recite simply removing of excess solvent from the pre-soaked, saturated fabric roll in language of broad scope rather than draining excess solvent from the fabric roll as recited in the claims of the patent; and (4) they fail to recite the combination of (a) the claimed cleaning system with means for positioning the system adjacent a cylinder to be cleaned, (b) means locating the fabric roll adjacent to and operatively associated with a cylinder to be cleaned and (c) mounting means for disposing the fabric roll in a position to clean a cylinder while the fabric is in contact with and being fed past such cylinder. Moreover, I further determined on or about the same date mentioned above that the specification and claims of the patent are defective in that they contain a number of obvious errors in disclosing and reciting the caliper thickness of a suitable fabric which can be employed in the pre-packaged, pre-soaked cleaning system in accordance with my inventive concept - namely, that I disclosed at Column 4, lines 60-62 and Column 5, lines 9 and 10 and recited in Claims 8 and 10 the caliper thickness in terms of mils rather than in terms of inches

and further in the specification I disclosed the top of such thickness range as 0.10 at Column 5, line 10 rather than as 0.01, as recited in original claim 10, when paper is disclosed as a cleaning fabric, and further recited in Claim 8 the upper limit of such range as 0.30 rather than 0.03, as disclosed at Column 4, line 60 of the specification when referring to a fabric generally, which can be employed in the practice of my invention. In addition, on or about the same date mentioned above, I further determined that the patent discloses at Column 7, lines 58 through 68, that the fabric generally retains therein, after draining to remove excess solvent in accordance with a preferred form of the method for making the system of this inventions, an amount sufficient to wet the fabric to the extent that it imparts efficient cleaning ability thereto to clean the cylinders of apparatus, such as printing machinery, from about 0.05 to about 0.5 cc of solvent per in^2 of fabric, but which more properly should read --from about 0.03 to about 0.05 up to about 0.3 to about 0.5 cc of solvent per in^2 of fabric--, which phraseology is more realistic though somewhat broader in scope. My co-inventor, Walter H. Cano, and I discussed my belief in detail concerning the above-mentioned errors in the specification and claims on or about January 10, 1995.

7. As an original and joint inventor, I, Walter H. Cano, believe the original patent 5,368,157 to be partly inoperative and invalid, and thus defective, because of

errors in the specification and claims as set forth above and which occurred without any deceptive intent on my part and which first came to my attention on or about January 10, 1995, when my co-inventor, Charles R. Gasparrini, brought these matters to my attention and discussed with me in detail his belief and reasons for the same that the patent is partly inoperative and invalid, and thus defective, and that I concur with his belief and the reasons therefor without any reservations.

9. I hereby appoint the following attorney(s) and/or agent(s) to prosecute the application and transact all business in the Patent and Trademark Office connected therewith: John D. Foley (Reg. No. 16,836), John A. Diaz (Reg. No. 19,550), Thomas P. Dowling (Reg. No. 19,221), John C. Vassil (Reg. No. 19,098), Warren H. Rotert (Reg. No. 19,659), Alfred P. Ewert (Reg. No. 19,887), David H. Pfeffer, P.C. (Reg. No. 19,825), Harry C. Marcus (Reg. No. 22,390), Robert E. Paulson (Reg. No. 21,046), Stephen R. Smith (Reg. No. 22,615), Kurt E. Richter (Reg. No. 24,052), J. Robert Dailey (Reg. No. 27,434), Eugene Moroz (Reg. No. 25,237), John P. Sweeney (Reg. No. 27,471), Arnold I. Rady (Reg. No. 26,601), Christopher A. Hughes (Reg. No. 26,914), William S. Feiler (Reg. No. 26,728), Joseph A. Calvaruso (Reg. No. 28,287), James W. Gould (Reg. No. 28,859), Richard C. Komson (Reg. No. 27,913), Israel Blum (Reg. No. 26,710), Bartholomew Verdirame (Reg. No. 28,483), Maria C. H. Lin

(Reg. No. 29,323), Joseph A. DeGirolamo (Reg. No. 28,595), Christopher E. Chalsen (Reg. No. 30,936), Michael A. Nicodema (Reg. No. 33,199) and Michael P. Dougherty (Reg. No. 32,730) of Morgan & Finnegan, L.L.P. whose address is: 345 Park Avenue, New York, New York 10154.

8. I hereby declare that all statements made herein of my own knowledge are true and that all statements made on information and belief are believed to be true; and further that these statements were made with the knowledge that willful false statements and the like so made are punishable by fine or imprisonment, or both, under Section 1001 of Title 18 of the United States Code and that such willful false statements may jeopardize the validity of the application or any patent issued thereon.

I hereby specify the following as the correspondence address to which all communications about this application are to be directed:

SEND CORRESPONDENCE TO:
Thomas M. Hammond
MORGAN & FINNEGAN, L.L.P.
345 Park Avenue
New York, N.Y. 10154

DIRECT TELEPHONE CALLS TO
(212)415-8728

Full name of first joint inventor Charles R. Gasparrini, I-to

Inventor's signature Charles R. Gasparrini Date: 4/4/95

Residence: 55 Quintard Drive, Port Chester, New York 10573

Citizenship United States of America

Post Office Address Same

Full name of second joint inventor Walter H. Cano 2-00

Inventor's signature [signature] Date: 4/6/95

Residence: 65 Asylum Street, Bridgeport, Connecticut 06610 CT

Citizenship United States of America

Post Office Address Same

EXHIBIT D

PATENT

RECEIVED
MAR 1 9 1996
GROUP 3200

Docket No. 0140-4124

MAIL ROOM
MAR
6
1996
PAT. & TRADE MARK OFF.

REISSUE PATENT APPLICATION
IN THE UNITED STATES PATENT AND TRADEMARK OFFICE

In re Reissue of:

#7

U.S. Patent No. 5,368,157
Serial No.: 145,881
Filing Date:October 29, 1993
Issue Date: November 29, 1994

Serial No.: 08/419,752 Group Art Unit: 3208

Filing Date: April 10, 1995 Examiner: Ackun, J.

Inventor: Charles R. Gasparrini et al.

For: **PRE-PACKAGED, PRE-SOAKED CLEANING SYSTEM AND METHOD FOR MAKING THE SAME**

REISSUE APPLICATION DECLARATION AND POWER OF ATTORNEY BY INVENTORS

ASSISTANT COMMISSIONER FOR PATENTS
Washington, D.C. 20231

Sir:

As a below named inventor, I hereby declare that:

1. My residence, post office address and citizenship are as stated below next to my name and I believe I am an original and joint inventor of the subject matter which is described and claimed in letters patent number 5,368,157 granted on November 29, 1994, and in the foregoing specification and for which invention I solicit a reissue patent.

2. I hereby state that I have reviewed and understand the contents of the above identified specification, including the claims.

3. I acknowledge the duty to disclose information which is material to the examination of this application namely, information where there is a substantial likelihood that a reasonable examiner would consider it important in deciding whether to allow the application to issue as a patent.

4. In compliance with this duty there is already of record an Information Disclosure Statement in accordance with 37 CFR 1.98, the same having been filed with the subject Reissue Application.

5. I hereby claim no foreign priority benefits under Title 35, United States Code, § 119 of any foreign application(s) for patent or inventor's certificate.

6. As an original and joint inventor, I, Charles R. Gasparrini believe the original patent 3,568,157, issued November 29, 1994, to be partly inoperative and invalid, and thus defective, because of errors which occurred without any deceptive intent on my part. Through inadvertence, error and mistake due to the fact that time was of the essence in filing the Application, I did not realize that the Application, as filed, claimed less than I had a right to claim and that there were contained in the Specification certain typographical dimensional errors which were overlooked. Thereafter, during the prosecution of the Application, I did not have an occasion to study the Claims and Specification of the Application as it was filed.

During this time period, due to the pressures of other matters under my direction and control, I did not revisit the details of the Application and did not become aware of the errors contained therein until a later date.

At such later date management review of the Specification and Claims resulted in recognition of the potential of the invention in the original Application and raised certain questions regarding certain potential competitive activities that could be taken with respect to the original Patent. These questions caused me and my co-inventor to study the Patent in more detail and to ask certain questions of our patent counsel regarding the breadth of the Claims and the certain typographical dimensional errors that appeared in the original Specification. Thus, the failure to claim all that I had a right to claim and the occurrence of certain typographical dimensional errors first came to my attention on or about January 4, 1995, when considering the original patent and its relationship to other technical programs of Baldwin Graphic Systems, Inc., the assignor, involving other cleaning systems for use to clean the cylinders of printing machines which had previously been completed, under actual development and/or under consideration for possible future development.

The reasons for this belief are that I claimed less than I had a right to claim in the patent and that as

claimed, the claims fail to cover the inventive subject matter of my pre-packaged, pre-soaked cleaning system in the broadest scope to which I am entitled.

More specifically, I noted that (1) the claims of the patent fail to recite the sleeve which is disposed around and in contact with the pre-soaked fabric roll can be simply a sealed or sealable sleeve in contact with the fabric. In contrast the claims of the original patent recite a heat-sealed and/or heat-sealed and heat shrunk plastic sleeve which is in intimate contact with the pre-soaked fabric roll. The invention in its broader aspects need not be limited to the preferred or specific embodiments recited in the Specification.

Still further I noted at the same time that (2) the claims of the patent fail to recite the core around which the pre-soaked fabric roll is disposed as simply a core, but rather recite the core as an elongated cylindrical core having open ends, unnecessary limitations in the broad invention.

In addition, I noted at the same time that the claims of the patent (3) fail to recite simply removing excess solvent from the pre-soaked, saturated fabric roll in language of broad scope, but rather call for draining excess solvent from the fabric roll.

Still further at the same time I noted (4) that the claims of the patent fail to recite the combination of

(a) the claimed cleaning system with means for positioning the system adjacent a cylinder to be cleaned, (b) means locating the fabric roll adjacent to and operatively associated with a cylinder to be cleaned and (c) mounting means for disposing the fabric roll in a position to clean a cylinder while the fabric is in contact with and being fed past such cylinder. Being an inventor and not an expert in patent law, I did not realize that certain commercial competitive activities could possibly occur unless there were combination claims covering the pre-packaged system and unless there were combination claims of the type contained herein.

Moreover, I also determined on or about the same date mentioned above, that is January 4, 1995, that the specification and claims of the patent are defective in that they contain a number of obvious errors in disclosing and reciting the caliper thickness of a suitable fabric which can be employed in the pre-packaged, pre-soaked cleaning system in accordance with my inventive concept -- namely, that I disclosed at Column 4, lines 60-62 and Column 5, lines 9 and 10 and recited in Claims 8 and 10 the caliper thickness of a suitable cleaning fabric to be employed in my inventive concept in terms of mils rather than in terms of inches. Further I determined that in the specification I disclosed the top of such thickness range as 0.10 at Column 5, line 10 but inadvertently recited this number as 0.01, in

original claim 10, when paper is disclosed as a cleaning fabric and I should have recited the top of the thickness range as 0.10 as disclosed at Column 1, line 10 of the Specification. Still further I determined that I had properly recited in Claim 8 the upper limit of thickness of a suitable cleaning fabric as 0.30 but had disclosed the thickness as 0.03, at Column 4, line 60 of the specification when referring to a fabric generally, which can be employed in the practice of my invention.

Furthermore, it is my belief that the errors set forth in the preceding paragraph are clearly obvious errors, since a fabric to be employed in the pre-packaged, pre-soaked cleaning system of my invention having a caliper thickness recited in terms of mils, rather than in terms of inches, would be so thin that it would simply disintegrate or fall apart, that is it would have insufficient consistency to perform its function. Consequently, it simply would not have the ability to exhibit high acceptability to being soaked or wetted by the low volatility organic compound solvent used to saturate the same, as called for at Column 4, lines 53 through 62 of the patent. Nor would such a fabric having a thickness recited in mils, rather than inches, have the ability when saturated with such solvent have the ability to retain from about 0.05 to about 0.5 cc of such solvent per in^2 of fabric as called for at Column 4, lines 62 through 64 of the patent. Still

further, such fabrics, whether woven or non-woven, paper or cloth, would not have a basis weight in a range of 1.5 ounces per square yard to about 6.0 ounces per square yard, nor the required tensile strengths or stretchability, as called for in the patent commencing at Column 4, lines 66 through Column 5, line 19. On the other hand, to recite such caliper thickness in terms of feet or yards, or some other thickness basis, would clearly recite a cleaning material which would not be a cloth or fabric which could be easily wrapped to form a roll, but rather would result in the formation of a cleaning material which would not be a roll at all. Rather it would be a thick mat or the like which would be disproportionate in size for use on printing machinery and difficult, if not impossible, to manipulate for its intended end use. Rather it would exhibit inefficient cleaning ability and be useless in my inventive concept.

I reiterate that I believe that the failure to claim subject matter identified as (1), (2), (3) and (4) above and all of the above-mentioned obvious errors occurred inadvertently and without any deceptive intent and such failure to claim and obvious errors occurred purely through oversight due to rapid review of the application presented to me by my attorney for purposes of my review and execution by me and my co-inventor, Walter H. Cano, provided we found the application be in good order, so that subsequent

immediate filing in the U.S. Patent and Trademark Office could be accomplished. In addition, a separate international PCT application filed on the same date. At the same time, I was in preparation for disclosure of my inventive concept at a trade show, since the cleaning system of the inventive concept was to be disclosed publicly at such trade show in Chicago, Illinois, within one or two days after the actual filing date of the applications. Thus, there was a need to obtain a filing date before the public disclosure of the inventive concept at the above mentioned trade show, as well as to establish preservation of foreign rights. Accordingly, these errors occurred inadvertently without deceptive intent and were not noticed by me until after the original Patent was granted, at the review mentioned above.

My co-inventor, Walter H. Cano, and I discussed my beliefs in detail concerning the above-mentioned failure to claim and obvious errors in the specification and claims on or about January 10, 1995.

7. As an original and joint inventor, I, Walter H. Cano, believe the original patent 5,368,157 to be partly inoperative and invalid, and thus defective, because of the above-mentioned failure to claim and obvious errors in the specification and claims as set forth above and which occurred without any deceptive intent on my part and which first came to my attention on or about January 10, 1995, when my co-inventor, Charles R. Gasparrini, brought these

matters to my attention and discussed with me in detail his beliefs and reasons for the same that the patent is partly inoperative and invalid, and thus defective, and that I concur with his beliefs and the reasons therefor without any reservations.

9. I hereby appoint the following attorney(s) and/or agent(s) to prosecute the application and transact all business in the Patent and Trademark Office connected therewith: John D. Foley (Reg. No. 16,836), John A. Diaz (Reg. No. 19,550), Thomas P. Dowling (Reg. No. 19,221), John C. Vassil (Reg. No. 19,098), Warren H. Rotert (Reg. No. 19,659), Alfred P. Ewert (Reg. No. 19,887), David H. Pfeffer, P.C. (Reg. No. 19,825), Harry C. Marcus (Reg. No. 22,390), Robert E. Paulson (Reg. No. 21,046), Stephen R. Smith (Reg. No. 22,615), Kurt E. Richter (Reg. No. 24,052), J. Robert Dailey (Reg. No. 27,434), Eugene Moroz (Reg. No. 25,237), John F. Sweeney (Reg. No. 27,471), Arnold I. Rady (Reg. No. 26,601), Christopher A. Hughes (Reg. No. 26,914), William S. Feiler (Reg. No. 26,728), Joseph A. Calvaruso (Reg. No. 28,287), James W. Gould (Reg. No. 28,859), Richard C. Komson (Reg. No. 27,913), Israel Blum (Reg. No. 26,710), Bartholomew Verdirame (Reg. No. 28,483), Maria C. H. Lin (Reg. No. 29,323), Joseph A. DeGirolamo (Reg. No. 28,595), Christopher E. Chalsen (Reg. No. 30,936), Michael A. Nicodema (Reg. No. 33,199), Michael P. Dougherty (Reg. No. 32,730), Seth J. Atlas (Reg. No. 32,454) and Andrew M.

Riddles (Reg. No. 31,657) of Morgan & Finnegan, L.L.P. whose address is: 345 Park Avenue, New York, New York 10154.

8. I hereby declare that all statements made herein of my own knowledge are true and that all statements made on information and belief are believed to be true; and further that these statements were made with the knowledge that willful false statements and the like so made are punishable by fine or Imprisonment, or both, under Section 1001 of Title 18 of the United States Code and that such willful false statements may jeopardize the validity of the application or any patent issued thereon.

I hereby specify the following as the correspondence address to which all communications about this application are to be directed:

SEND CORRESPONDENCE TO:
Thomas M. Hammond
MORGAN & FINNEGAN, L.L.P.
345 Park Avenue
New York, N.Y. 10154

DIRECT TELEPHONE CALLS TO
(212)415-8728

Full name of first joint inventor Charles R. Gasparrini

Inventor's signature Charles R. Gasparrini Date: 3/5/96

Residence: 55 Quintard Drive, Port Chester, New York 10573

Citizenship United States of America

Post Office Address Same

Full name of second joint inventor Walter H. Cano

Inventor's signature 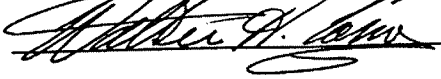 Date: 3-5-96

Residence: 65 Asylum Street, Bridgeport, Connecticut 06610

Citizenship United States of America

Post Office Address Same

EXHIBIT E

PATENT

Docket No. 0140-4124

REISSUE PATENT APPLICATION
IN THE UNITED STATES PATENT AND TRADEMARK OFFICE

In re Reissue of:

U.S. Patent No. 5,368,157
Serial No.: 145,881
Filing Date: October 29, 1993
Issue Date: November 29, 1994

Serial No.: 08/419,752 Group Art Unit: 3208

Filing Date: April 10, 1995 Examiner: Ackun, J.

Inventor: Charles R. Gasparrini et al.

For: PRE-PACKAGED, PRE-SOAKED CLEANING SYSTEM AND METHOD FOR MAKING THE SAME

AMENDMENT AFTER FINAL REJECTION

ASSISTANT COMMISSIONER FOR PATENTS
Washington, D.C. 20231

Sir:

In response to the Official Action dated March 16, 1996, please amend the above-identified Application as follows:

IN THE SPECIFICATION:

Column 2, before line 10, cancel the insertion made in the Preliminary Amendment filed with this Application as a new paragraph which reads: "In accordance with invention . . . . cleaning ability of the fabric.";

Column 2, line 10, cancel the insertion after "with" made in the Preliminary Amendment filed with this Application which reads "a more specific aspect of";

Column 2, lines 27 and 28, cancel the insertion after "system" made in the Preliminary Amendment filed with

this Application and which reads "Broadly, the method comprises . . . . the cleaning ability of the fabric roll.";

Column 2, line 28, before "the method", cancel the insertion which was made in the Preliminary Amendment filed in this Application and which reads "More specifically," and insert therefore --Broadly--;

Column 2, lines 49 and 50, cancel the elimination of the phraseology reading "elongated cylindrical" as made in the Preliminary Amendment filed with this Application;

Column 2, line 53, cancel the insertion made in the Preliminary Amendment filed with this Application before "sleeve" and which reads "sealable" and insert therefor --heat-sealable plastic--;

Column 2, line 56, cancel the elimination of the term "heat-sealable" which was made in the Preliminary Amendment filed with this Application and reinsert therefor the term --heat-sealable--;

Column 2, line 60, cancel the elimination of the term "cylindrical" which was made in the Preliminary Amendment filed with this Application and reinsert therefor the term --cylindrical--.

Column 3, lines 11 through 13, cancel the insertion of the phraseology made in the Preliminary Amendment filed with this Application and which reads "and which extend over the peripheral . . . before the role is inserted in the plastic sleeve" and reinsert therefor the

phraseology --and which extend over the peripheral edges of the fabric roll before the roll is inserted in the plastic sleeve--;

Column 3, line 27, cancel the elimination of the term "drained" as made in the Preliminary Amendment filed with this Application and reinsert therefore --drained--;

Column 3, line 30, cancel the elimination of the term "drained" as made in the Preliminary Amendment filed with this Application and reinsert therefor --drained--;

Column 3, line 31, cancel the elimination of the term "plastic" as made in the Preliminary Amendment filed with this Application and reinsert therefor --plastic--;

Column 3, line 57, after "comprises" cancel the insertion of the phraseology "a core such as" as made in the Preliminary Amendment filed with this Application;

Column 3, line 68, cancel the insertion of the term "sealable" before "sleeve 15" and the insertion of the phraseology "which may be" as made in the Preliminary Amendment filed with this Application.

Column 4, line 24, cancel the elimination of the phraseology "also preferably" made in the Preliminary Amendment filed with this Application;

Column 4, line 27, before "extend" cancel the insertion which reads "which may" made in the Preliminary Amendment filed with this Application;

Column 4, line 60, cancel "0.30 inch" and insert therefor --0.030 inch--.

Column 5, between lines 41 and 42, cancel the insertion which reads "A wide variety of sealable materials may . . . . of the invention. Exemplative of such materials . . . . appropriate areas thereof." as made in the Preliminary Amendment filed with this Application;

Column 5, line 42, cancel the elimination of "A" and reinsert therefor --A--; and before "wide" cancel the insertion which reads "On the other hand, where plastics . . . . sealed sleeves, a" as made in the Preliminary Amendment filed with this Application;

Column 5, line 62, before "excess" cancel "removing" as inserted in the Preliminary Amendment filed with this Application and insert therefor --draining off--;

Column 5, line 65, cancel the elimination of the phraseology "an elongated cylindrical" and the insert therefor of "a" as made in the Preliminary Amendment filed with this Application;

Column 5, line 66, before "sleeve" cancel the elimination of the phraseology reading "heat-sealable plastic" and the insertion therefor of "sealable" as made in the Preliminary Amendment filed with this Application;

Column 5, line 67, cancel the elimination of the term "drained" as made in the Preliminary Amendment filed with this Application;

Column 5, line 68, before "the" cancel the elimination of the term "subjecting" and the elimination of the phraseology "to a temperature sufficient to heat" as made in the Preliminary Amendment filed with this Application.

Column 6, line 1, cancel the elimination of the phraseology "seal the plastic sleeve" and drained" as made in the Preliminary Amendment filed with this Application;

Column 6, line 2, cancel the elimination of the term "intimate" as made in the Preliminary Amendment filed with this Application;

Column 6, lines 10 and 11, cancel the elimination of the term "cylindrical" as made in the Preliminary Amendment filed with this Application;

Column 6, line 17, after "in" cancel the insertion of the phraseology reading "a sealable sleeve or" as made in the Preliminary Amendment filed with this Application;

Column 6, line 18, after "is" cancel the insertion "sealed" as made in the Preliminary Amendment filed with this Application;

Column 6, line 20, after "roll" cancel the insertion of the term "and" and eliminate the cancellation of the term "intimate" as made in the Preliminary Amendment filed with this Application;

Column 6, line 21, before "temperatures" cancel the insertion which reads "in cases where a heat-sealable

and/or heat-sealable and heat-shrinkable plastic sleeve is used,-- as made in the Preliminary Amendment filed with this Application.

Column 7, line 3, cancel the elimination of the phraseology "elongated cylindrical" made in the Preliminary Amendment filed with this Application;

Column 7, line 7, before "heat-sealable" cancel the insertion of the phraseology "sealable sleeve or" as made in the Preliminary Amendment filed with this Application;

Column 7, line 8, after "is" cancel the insertion "sealed" as made in the Preliminary Amendment filed with this Application;

Column 7, line 10, before "heat-seal" cancel the insertion of the term "sealed" as made in the Preliminary Amendment filed with this Application;

Column 7, line 11, cancel the elimination of the term "drained" as made in the Preliminary Amendment filed with this Application;

Column 7, line 12, cancel the elimination of the term "intimate" as made in the Preliminary Amendment filed with this Application;

Column 7, line 13, after "particular" cancel the insertion of "sealing" as made in the Preliminary Amendment filed with this Application;

Column 7, line 14, after "of" cancel the insertion of the term "sealable" as made in the Preliminary Amendment filed with this Application;

Column 7, line 16, after "about" cancel the insert of the phraseology "ambient temperature, and/or" as made in the Preliminary Amendment filed with this Application;

Column 7, line 21, cancel the elimination of term "plastic" as made in the Preliminary Amendment filed with this Application;

Column 7, line 22, after "general," cancel the insertion of "where" and after "heat-sealing" the insertion of "are employed, they" as made in the Preliminary Amendment filed with this Application;

Column 7, line 28, cancel the elimination of the term "plastic" as made in the Preliminary Amendment filed with this Application;

Column 7, line 33, cancel the elimination of the term "intimate" as made in the Preliminary Amendment filed with this Application;

Column 7, line 56, cancel the elimination of the term "cylindrical" as made in the Preliminary Amendment filed with this Application;

Column 7, line 67, after "about", first occurrence, cancel the insertion which reads "0.03 to about"; after "0.5" the insertion of "up" and after "about", second occurrence, the insertion which reads "0.3 to about"

as made in the Preliminary Amendment filed with this Application.

Column 8, before line 15, cancel the insertion of the new paragraph which reads "Thus, the pre-packaged, pre-soaked cleaning system . . . . in a simple manner. That is, for example, the system can be disposed . . .. on such mounting means. Moreover, the mounting means . . . . and being fed past the same." as made in the Preliminary Amendment filed with this Application.

IN THE CLAIMS:

Cancel Claims 29 through 34, 36, 38 through 43 and 47 through 56 without prejudice.

Amend Claims 44, 45 and 46 as follows:

29~~44~~. (Amended once) A pre-packaged, pre-soaked cleaning system as defined in Claim 28 wherein the sealed sleeve can be opened or removed from the fabric roll for use of said fabric roll and including in combination ~~[with a]~~ therewith means for positioning ~~[the]~~ said pre-packaged, pre-soaked cleaning system adjacent a cylinder to be cleaned. S.A. 8/4/4

30~~45~~. (Amended once) A pre-packaged, pre-soaked cleaning system as defined in Claim ~~[29]~~ 1 wherein the sealed sleeve ~~[is]~~ can be opened or removed from the fabric roll for use of said fabric roll and including means ~~[is~~ S.A. 8/4/4

~~provided~~] locating said fabric roll adjacent to and operatively associated with a cylinder to be cleaned.

46. (Amended once) In combination with a pre-packaged, pre-soaked cleaning system as defined in Claim [28] 45, a system wherein the means for locating the fabric roll is a mounting means for [mounting the pre-soaked] locating said fabric roll in a position to clean a cylinder while the fabric is in contact with and being fed past said cylinder.

Add the following Claim:

52. A pre-packaged, pre-soaked cleaning system for use to clean the cylinder of printing machines comprising in combination:

(1) a pre-soaked fabric roll saturated to equilibrium with cleaning solvent disposed around a core, said fabric roll having a sealed sleeve which can be opened or removed from said fabric roll for use of said fabric roll, disposed therearound, and said system including

(2) means for locating said fabric roll adjacent to and operatively associated with a cylinder to be cleaned.

IN THE ABSTRACT:

In the body of the Abstract:

Lines 5 and 6, cancel the elimination of the term "cylindrical" as made in the Preliminary Amendment filed with this Application;

Line 6, cancel the elimination of the phraseology reading "having open ends" as made in the Preliminary Amendment filed with this Application;

Line 7, before "heat-sealable" cancel the insertion reading "sealable sleeve or a" as made in the Preliminary Amendment filed with this Application;

Line 8, cancel the elimination of "plastics" as made in the Preliminary Amendment filed with this Application;

Line 10, cancel "to sealing" as inserted in the Preliminary Amendment filed with this Application and insert therefor --to--.

In the Preliminary Amendment, as filed with this Application, cancel the amendatory matter which appears on page 8 of the Amendment and which involves the changes called for at Lines 18 and 19.

REMARKS

Initially, Applicants and their attorneys take this opportunity to thank the Examiner for his kind courtesy in granting them a Personal Interview in this case on July 23, 1996. Mr. Gasparrini, one of the inventors, and the undersigned attorney both of whom attended the Interview, found the Examiner's views and suggestions to be most helpful in moving the prosecution of this case towards a possible positive conclusion.

The Specification, Claims and Abstract in this Application have been amended as above indicated.

Claims 1 through 27, 28, 44, 45, 46 and 57 are now in this case.

In an effort to substantially reduce the issues in this matter and simplify the Examiner's consideration thereof, Applicants have done the following:

1. Drastically reduced the number of changes to the Specification as they are deemed unnecessary to support the claimed invention in the original or new Claims. While the changes previously suggested were deemed by Applicants to be by way of explanation recognizable by those skilled in the art, rather than new matter, Applicants are simplifying the issues.

2. Significantly reduced the number of Claims in an effort to simplify the issues presented to the Examiner.

More specifically, the Specification and Abstract have been amended to restore the same to the original language as set out in U.S. Patent 5,368,157 which is the subject of this Reissue Application. The only exception is the retention of minor amendments to the Specification at Column 2, line 48, where the term "another" has been inserted before "specific"; Column 2, line 52, where the term "more" has been deleted; Column 2, line 57, where the term "more" has been deleted; Column 3, line 4, where the term "more" has been deleted; Column 3, line 6, where the phraseology "the sleeve" has been deleted; and, Column 3, line 9, wherein the term "more" has also been deleted.

In addition, at Column 4, line 60, the insertion "0.30 inch" and replaced by --0.030 inch--; thus returning the Specification in this respect by re-inserting the original numerical value and at Column 5, line 29, the insertion relating to the utilization of organic oils, such as palm oils, coconut oils and the like, has also been retained in the Specification.

It is respectfully pointed out to the Examiner that the amendatory matters referred to above deal only with minor language changes in the Specification and do not involve, in any way, an enlargement of the scope of Applicants' inventive concept.

Indeed, none of the amendments have any effect on original Claims 1 through 7, 9, or 11 through 27. Therefore, these Claims should be allowable.

The Abstract has now been restored to its original language, except for two minor amendments which were called for at lines 18 and 19 and both of which amendments are incorrect because they do not refer to proper lines in the body of the Abstract.

Next, referring to the Claims, the attention of the Examiner is respectfully directed to the fact that Claims 1 through 27 of the originally granted Claims remain in this case. Claim 28 is an independent Claim, drawn to the pre-packaged, pre-soaked cleaning system of the invention. Claim 44 is dependent on Claim 28 and drawn to a combination of the system recited in Claim 28 with a cylinder to be cleaned. Claims 28, 44, 45 and 46 are Reissue Claims. On the other hand, a substantial number of Claims have been cancelled, namely 29 through 34, 36, 38 through 43, and 47 through 56. Claims 35 and 37 were previously cancelled. Claim 45 has been amended to make it dependent on original Claim 1 and Claim 46 has been amended to make it dependent on Claim 45. Claims 44, 45 and 46 have also been amended, as above indicated, to make them more properly recite product language rather than process or method language in view of the discussion of this aspect of the matter at the Interview.

Finally, added Claim 57 is submitted herewith. This added Claim is an independent Claim combining the substance of Claims 28 and 44, although broader in scope in some respects. The support therefor, as pointed out at the Interview, occurs in the originally granted Patent at Column 1, lines 6 through 15 of the Specification, as well as at Column 8, lines 1 through 7 which also provides support for Claims 28 and 44.

Column 1, lines 6 through 15 states:

> This invention relates to a cleaning system for use to clean the cylinders of printing machines. More particularly, the invention relates to a pre-packaged, pre-soaked blanket cleaning system to clean the cylinders of printing machines. While the invention is disclosed as it applies to the cleaning of the cylinders of printing machines for the sake of simplicity, it is to be understood that it can also be utilized to clean the cylinders of other types of machinery.

The pertinent portions of the Specification at Column 8, lines 1 through 7 is quoted hereinbelow in connection with the discussion involving the support for Claims 45 and 46, as well.

In view of the fact that added Claim 57 combines the substance of original Reissue Claims 28 and 44, it is respectfully submitted that Claim 57, although broader in some respects, raises no new issues which would require further search and consideration. This is especially so, since Claims 28 and 44 were previously considered by the Examiner and they were subject of a prior art search.

Still further in this regard, it is respectfully pointed out to the Examiner that the only issue raised against Claims 28 and 44 was the question of support, and thus the addition of "new matter". However, the Examiner concluded at the Interview that it appeared that the proposed amendments did not add any new matter to the Application, although a final determination as to the patentability of the Claims would depend on the content of any amendment filed hereafter.

Thus, it is respectfully submitted that the Examiner's statements, as set forth on pages 1 and 3 of the Official Action of May 16, 1996, are no longer issues in this matter and are no longer applicable. However, in order to be completely responsive, a new Supplemental Reissue Declaration By Inventors is attached hereto which deals with the issues remaining in this case.

Therefore, it is respectfully submitted that the rejection of Claims 1 through 56, as being based upon a defective Reissue Declaration Under 35 U.S.C., Section 251, as set forth in paragraph 2 on page 4 of the Official Action is no longer applicable.

The support for Claims 1 through 27, as allowed was found in the originally granted Patent.

On the other hand, with respect to Claims 28 and 44 through 46 which still remain in this Application and

Claim 57 which has been added, the attention of the Examiner is respectfully directed to the following comments.

The support for added Claim 57 in the Specification at Column 1, lines 6-14, as well as at Column 8, lines 1 through 7, has been pointed out above.

It is to be noted that at Column 8, lines 1 through 7 of the Patent, there is also clear support for Reissue Claims 45 and 46 (now dependent on Claim 1) involving the recitation of a cleaning system according to the invention associated with a cylinder to be cleaned. These Claims reflect the failure of the original Claims to cover the combination of the package cleaning system with a press and are allowable because the Specification of the original Patent discloses a potential invention in broader terms.

Column 1, lines 6 through 14 of the Patent is set forth above and Column 8, lines 1 through 7 states:

> "The so-made pre-packaged, pre-soaked blanket cleaning system of this invention can be employed on any printing apparatus, simply by modifying the apparatus to provide it with a shaft which can be inserted through the core and also a take-up roll which is employed to take up the used portion of the cleaning fabric after it has carried out its cleaning function."

Still further, in the Specification, at Column 7, lines 36 through 45, it is stated:

> "In those cases where the saturated wrapped fabric roll is to be employed with a slotted canister, the roll is simply inserted in the canister with a portion thereof protruding through the slot and the canister is provided with knock-out end

> portions which may be inserted therein after insertion of the roll, such end portions simply being removed when the roll is to be disposed on an appropriate shaft of a printing apparatus or the like in order to permit insertion of the shaft through the core of the roll, as well as removal of the shaft from the core."

Obviously, in actual use, the sleeve of the package cleaning system must be opened or removed whether it be heat-sealed, heat-shrunken and heat-sealed, or simply sealed, as needed, in any other convenient fashion, in order for the cleaning fabric to be brought into contact with a cylinder to be cleaned and then to be taken up by an appropriate take-up roll after it has carried out its cleaning function and which elements are clearly disclosed in the Specification.

Thus, dependent Claims 45 and 46 which are dependent on Claim 1 are fully supported by the disclosure and define a patentable invention especially since no prior art has been applied against the same.

As established in these portions of the Specification, the cleaning system of this invention can be employed on any printing apparatus simply by modifying the apparatus to provide it with a shaft to support the core and a take-up roll employed to take up the used portion of the cleaning fabric after it has carried out its cleaning function by contacting the cylinder or cylinders to be cleaned. Thus, it is respectfully submitted that support for such Claims was clearly present in the original

Application, as filed. It is submitted with emphasis that the combination of the cleaning system of this invention with the elements of printing apparatus already known in the field, as recited in Claims 45 and 46, presents a novel and patentable recitation not heretofore taught or suggested by any previous patents or publications known to Applicants and furthermore no art has been applied against the same by the Examiner in the instant case.

As mentioned above, support for Claims 1 through 27 was found in the originally granted Patent. However, the Specification and Claims 8 and 10 of the Reissue Application were amended in order to bring them into agreement with each other to be internally consistent and to disclose and recite Applicants' inventive concept more precisely. For example, by Preliminary Amendment, the Specification was amended at Column 4, line 60, to change the caliper thickness from "mils" to "inches" while retaining the figure "0.030" for the top of the range disclosed in describing the caliper thickness of a cleaning fabric employed in the invention, thus reading "0.030 inch". The only changes in the Specification and Claims is to change mils to inches for the reason, as explained below, that a caliper thickness in mils cannot be accurately measured with a caliper of any kind.

Therefore, the Specification was returned to its original state with respect to the numerical figures. Claim 10 was amended to make it consistent with the Specification

of the original Patent insofar as the figure 0.10 is concerned. On the other hand, Applicants continue to assert that a thickness of "inches" rather than "mils" is the correct reference basis because those with ordinary skill in the art would recognize that mils is incorrect. One reason why a person skilled in the art would recognize the error is that a caliper such as a micrometer can measure only to 0.0001 inches and would not measure such a small distance as 0.000003 inches which is the distance of 0.003 mils. In other words, the instrument of measurement precludes the mil measurement from being correct.

In this connection, the Examiner's attention is respectfully directed to:

(1) Hackh's Chemical Dictionary, Fourth Edition, copyright 1969, published by McGraw-Hill, Inc., New York, N.Y., p. 430 (copy attached) where "mil" is defined as: (2) a measure of thickness, especially of wire. 1 mil = 1/1,000 in. = 25.4001 microns; and

(2) McGraw-Hill Encyclopedia of Engineering, Second Edition, copyright 1993, published by McGraw-Hill Inc., New York, N.Y., p. 136 (copy attached) where "caliper" is defined as an instrument with two legs used for measuring linear dimensions. The legs may pivot about a rivet or screw in a firm-joint pair of calipers. The legs may pivot about a pin being held against the pin by a spring and set in position by a knurled nut on a threaded rod; or the legs

may slide either directly (caliper rule) or along a screw (micrometer caliper) relative to each other, that is a micrometer.

On p. 743 (copy attached) of the same publication, a micrometer is defined as a precision instrument used to measure small distances and angles. A common use is on a machinist's caliper in which the spindle is an accurately machined screw which is rotated by the thimble or ratchet knob until the object to be measured is in contact with both the spindle and anvil. The ratchet slips after pressure is applied, ensuring consistent, accurate gaging. The number 1 on the sleeve represents 0.1 inch (emphasis added). The smallest divisions are 0.025 in. The thimble makes one complete turn for each 0.025 inc. on the sleeve, and the 25 divisions on the thimble allow reaching to the nearest 0.001 in. A vernier scale allows accurate reading to 0.0001 in.

Considering the numbers set forth in the granted Patent at Columns 4 and 5 and Claims 8 and 10, it is clear that in terms of "mils", as disclosed and claimed, these values call for a caliper thickness of a fabric which is so thin that it would be practically useless in the practice of the invention. On the other hand, the numbers set forth in terms of "inch" values provide fabrics of a thickness which are practical for use in the invention.

In addition, it would be obvious to anyone skilled in the art -- and it is to such individuals that an

application for patent is directed -- that the caliper thickness in mils of a fabric to be employed in the instant invention would be so thin that it would disintegrate, thus being impractical and useless. On the other hand, if the thickness of the fabric had been erroneously expressed in feet or yards, it would be clearly obvious to any skilled person also that it would be impractical for use in Applicants' invention. Thus, it is urged that correction of this obvious error does not result in the introduction of new matter to this Application -- neither in the Specification nor the Claims.

Furthermore, it will be noted by the Examiner that Claims 8 and 10 both refer to mils and inches in a dimensional context and it is desired that the Claims be internally consistent. However, in view of the fact that mils would be known to be too thin for any practical purpose, Applicants seek to correct this unintentional error. In this regard, it is emphasized that the error of using "mils" rather than "inches" is clearly unintentional in view of the foregoing discussion coupled with the fact that Claims 8 and 10 have recited "inches" from the date of filing of the original Application and of which this instant case is a Reissue. It is simply not consistent, for example, to disclose and claim the caliper thickness in terms of "mils" and to disclose and claim the tensile strength in terms of "lbs. per inch", especially in view of

the fact that a fabric having the "mils" thickness as disclosed and stated in Claims 8 and 10 would disintegrate, thus being useless, and while, at the same time, disclosing and reciting, as in Claims 8 and 10, that the fabric also has a "basis weight" in terms of "ounces per square yard" and when the fabric is paper, a "basis" weight in terms of "lbs.".

Consequently, it is respectfully submitted that the rejection of all the Claims in this case under 35 U.S.C., Section 112, first paragraph, for the reasons set forth in the objection to the Specification, as set out in paragraph 4 on page 7 of the Action, is not well taken and should be removed.

In view of the above amendments and remarks and the attached Supplemental Reissue Declaration, it is believed that this Application is now in condition for allowance. Accordingly, early allowance of all of the Claims now in this case is respectfully solicited.

Should the Examiner still find, however, the Claims are unallowable because of minor matters, it is respectfully requested that he call the undersigned in order to resolve the same.

In the event the Examiner should still find the Claims in this case unallowable after resolution of such minor matters, it is respectfully requested that this

Amendment be entered on the ground that it places this case in better condition for Appeal.

Respectfully submitted,

Thomas M. Hammond
Registration No. 19,131

Morgan & Finnegan, L.L.P.
345 Park Avenue
New York, New York 10154
(212) 758-4800

EXHIBIT F

Harry Potter amazon.com Privacy Information
THE NEXT LEVEL EXPERIENCE THE NEW UNDERARMOUR.COM EXPERIENCE THE NEW WEBSITE
Ads by Gc
HIV Info
Get the f
HIV treat
reliable,
informati
www.Kaletr

The American Heritage® Dictionary of the English Language: Fourth Edition. 2000.

contact

SYLLABICATION: con·tact

PRONUNCIATION: kŏn'tăkt'

NOUN: **1a.** A coming together or touching, as of objects or surfaces. **b.** The state or condition of touching or of immediate proximity: *Litmus paper turns red on contact with an acid.* **2a.** Connection or interaction; communication: *still in contact with my former employer.* **b.** Visual observation: *The pilot made contact with the ship.* **c.** Association; relationship: *came into contact with new ideas at college.* **3.** A person who might be of use; a connection: *The reporter met with her contact at the mayor's office.* **4. a.** A connection between two conductors that permits a flow of current or heat. **b.** A part or device that makes or breaks such a connection. **5.** *Medicine* A person recently exposed to a contagious disease, usually through close association with an infected individual. **6.** A contact lens.

VERB: Inflected forms: **con·tact·ed**, **con·tact·ing**, **con·tacts** (kŏn'tăkt', kən-tăkt')

TRANSITIVE VERB: **1.** To bring or put in contact. **2.** To get in touch with; communicate with: *"This past January I was contacted by a lawyer who said he needed my help"* (Elizabeth Loftus).

INTRANSITIVE VERB: To be in or come into contact.

ADJECTIVE: **1.** Of, sustaining, or making contact. **2.** Caused or transmitted by touching: *a contact skin rash.*

ETYMOLOGY: Latin *contāctus*, from past participle of *contingere*, to touch, from past participle of *contingere*, to touch : *com-*, com- + *tangere*, to touch; see **tag-** in Appendix I.

OTHER FORMS: **con·tac'tu·al** (kən-tăk'chōō-əl) —ADJECTIVE

Indi
Retir
Acc
Is a R
right
Fin
Banc of Am
Investment
Bank of A

con·tac'tu·al·ly —ADVERB

USAGE NOTE: The verb *contact* is a classic example of a verb that was made from a noun and of a new usage that was initially frowned upon. The noun meaning "the state or condition of touching" was introduced in 1626 by Francis Bacon. Some 200 years later it spawned a verb meaning "to bring or place in contact." This sense of the verb has lived an unremarkable life in technical contexts. It was only in the first quarter of the 20th century that *contact* came to be used to mean "to communicate with," and soon afterward the controversy began. *Contact* was declared to be properly a noun, not a verb, and moreover to be vague when used as a verb. However, turning nouns into verbs is one of the most frequent ways in which new verbs enter English. Sometimes there is resistance to such verbs, but often, especially when a term seems free of association with the jargon of business or bureaucracy, acceptance comes more freely, as with *curb, date, elbow, interview, panic,* and *park. Contact* is but another instance of what linguists call *functional shift* from one part of speech to another. As for the vagueness of *contact,* this seems a virtue in an age in which forms of communication have proliferated. The sentence *We will contact you when the part comes in* allows for a variety of possible ways to communicate: by mail, telephone, computer, or fax. •Despite the lengthy history of disapproval of *contact* by language critics, the verb's usefulness and popularity appear to have worn down resistance to it. In 1969, only 34 percent of the Usage Panel accepted the use of *contact* as a verb, but in a recent survey 65 percent of the Panel accepted it in the sentence *She immediately called an officer at the Naval Intelligence Service, who in turn contacted the FBI.* See Usage Note at impact.

The American Heritage® Dictionary of the English Language, Fourth Edition. Copyright © 2000 by Houghton Mifflin Company. Published by the Houghton Mifflin Company. All rights reserved.

CONTENTS · INDEX · ILLUSTRATIONS · BIBLIOGRAPHIC RECORD

‹ cont. contact dermatitis ›

Google Search

Click here to shop the Bartleby Bookstore.

Welcome · Press · Advertising · Linking · Terms of Use · © 2005 Bartleby.com



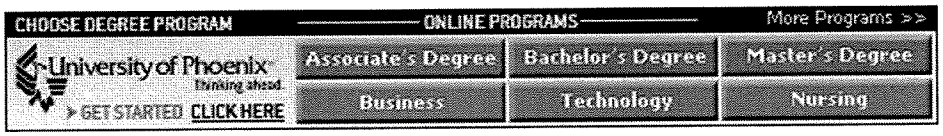

Case 1:06-cv-00077-JJF Document 73-3 Filed 12/14/2007 Page 28 of 49

Harry Potter
amazon.com
Privacy Information

TransUnion. EQUIFAX Experian
Do You Know Your Credit Score?
351 364 382
Click Here to See Yours!

CONTENTS · INDEX · ILLUSTRATIONS · BIBLIOGRAPHIC RECORD

The American Heritage® Dictionary of the English Language: Fourth Edition. 2000.

proximity

SYLLABICATION: prox·im·i·ty

PRONUNCIATION: prŏk-sĭm'ĭ-tē

NOUN: The state, quality, sense, or fact of being near or next; closeness: *"Swift's major writings have a proximity and a relevance that is splendidly invigorating"* (M.D. Aeschliman). See Usage Note at redundancy.

ETYMOLOGY: Middle English, from Old French *proximite*, from Latin *proximitās*, from *proximus*, nearest. See proximate.

The American Heritage® Dictionary of the English Language, Fourth Edition. Copyright © 2000 by Houghton Mifflin Company. Published by the Houghton Mifflin Company. All rights reserved.

CONTENTS · INDEX · ILLUSTRATIONS · BIBLIOGRAPHIC RECORD

< proximate proximity fuze >

Google Search

Click here to shop the Bartleby Bookstore.

Welcome · Press · Advertising · Linking · Terms of Use · © 2007 Bartleby.com

Harry Potter
amazon.com
Privacy Information

TransUnion. EQUIFAX Experian
Do You Know Your Credit Score?
351 364 382
Click Here to See Yours!

Ads by Gc
Proximity
Order Pro:
Sensors -
Check Ava
Ship Same
www.digike

Proximity
We are the
leading pr
Proximity
sensors
www.assen

Case 1:06-cv-00077-JJF Document 73-3 Filed 12/14/2007 Page 29 of 49

Harry Potter
amazon.com
Privacy Information

Do You Know Your Credit Score?
TransUnion. 351 EQUIFAX 364 Experian 382
Click Here to See Yours!

The American Heritage® Dictionary of the English Language: Fourth Edition. 2000.

immediate

SYLLABICATION: im·me·di·ate

PRONUNCIATION: ĭ-mē′dē-ĭt

ADJECTIVE: **1.** Occurring at once; instant: *gave me an immediate response.* **2a.** Of or near the present time: *in the immediate future.* **b.** Of or relating to the present time and place; current: *"It is probable that, apart from the most immediate, pragmatic, technical revisions, the writer's effort to detach himself from his work is quixotic"* (Joyce Carol Oates). **3.** Close at hand; near: *in the immediate vicinity.* See synonyms at **close**. **4.** Next in line or relation: *is an immediate successor to the president of the company.* **5.** Directly apprehended or perceived: *had immediate awareness of the scope of the crisis.* **6.** Acting or occurring without the interposition of another agency or object; direct.

ETYMOLOGY: Middle English *immediat*, from Old French, from Late Latin *immediātus* : Latin *in-*, not; see in–[1] + Latin *mediātus*, past participle of *mediāre*, to be in the middle; see mediate.

OTHER FORMS: **im·me′di·ate·ness** —NOUN

The American Heritage® Dictionary of the English Language, Fourth Edition. Copyright © 2000 by Houghton Mifflin Company. Published by the Houghton Mifflin Company. All rights reserved.

Google Search
Click here to shop the Bartleby Bookstore.

Ads by Gc
Check Yo Online
Get Instan on Essays
ETS's Nev ProofWrite ProofWriter
Eddie Bau Ornamen
Eddie Bau Ship Free Free Stocl Ornament www.Eddie

Case 1:06-cv-00077-JJF Document 73-3 Filed 12/14/2007 Page 30 of 49

Harry Potter
amazon.com
Privacy Information

CHOOSE DEGREE PROGRAM — ONLINE PROGRAMS — More Programs >>
University of Phoenix
Thinking ahead
GET STARTED CLICK HERE
Associate's Degree | Bachelor's Degree | Master's Degree
Business | Technology | Nursing

Ads by Gc

Fix Your
An Alterr
Counseli
Free Adv
Immedia
MarriageMa

CONTENTS · INDEX · ILLUSTRATIONS · BIBLIOGRAPHIC RECORD

The American Heritage® Dictionary of the English Language: Fourth Edition. 2000.

intimate[1]

SYLLABICATION: in·ti·mate

PRONUNCIATION: ˈĭn'tə-mĭt

ADJECTIVE: **1.** Marked by close acquaintance, association, or familiarity. **2.** Relating to or indicative of one's deepest nature: *intimate prayers.* **3.** Essential; innermost: *the intimate structure of matter.* **4.** Marked by informality and privacy: *an intimate nightclub.* **5.** Very personal; private: *an intimate letter.* **6.** Of or involved in a sexual relationship.

NOUN: A close friend or confidant.

ETYMOLOGY: Latin *intimātus*, past participle of *intimāre*, to make familiar with. See intimate[2].

OTHER FORMS: **in'ti·mate·ly** —ADVERB
in'ti·mate·ness —NOUN

The American Heritage® Dictionary of the English Language, Fourth Edition. Copyright © 2000 by Houghton Mifflin Company. Published by the Houghton Mifflin Company. All rights reserved.

CONTENTS · INDEX · ILLUSTRATIONS · BIBLIOGRAPHIC RECORD

< intimae intimate2 >

Google Search

Click here to shop the Bartleby Bookstore.

Welcome · Press · Advertising · Linking · Terms of Use · © 2005 Bartleby.com




Harry Potter
amazon.com
Privacy Information

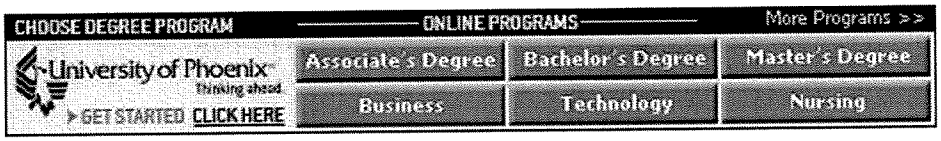
CHOOSE DEGREE PROGRAM
ONLINE PROGRAMS
More Programs >>
University of Phoenix
Thinking ahead.
GET STARTED CLICK HERE
Associate's Degree
Bachelor's Degree
Master's Degree
Business
Technology
Nursing

EXHIBIT G

Case 1:06-cv-00077-JJF Document 73-3 Filed 12/14/2007 Page 33 of 49



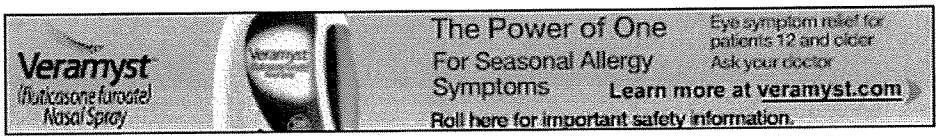

The American Heritage® Dictionary of the English Language: Fourth Edition. 2000.

dispose

SYLLABICATION: dis·pose

PRONUNCIATION: dĭ-spōz′

VERB: Inflected forms: **dis·posed**, **dis·pos·ing**, **dis·pos·es**

TRANSITIVE VERB: **1.** To place or set in a particular order; arrange. **2.** To put (business affairs, for example) into correct, definitive, or conclusive form. **3.** To put into a willing or receptive frame of mind; incline. See synonyms at **incline**.

INTRANSITIVE VERB: To settle or decide a matter.

NOUN: *Obsolete* **1.** Disposal. **2.** Disposition; demeanor.

PHRASAL VERB: **dispose of 1.** To attend to; settle: *disposed of the problem quickly.* **2.** To transfer or part with, as by giving or selling. **3.** To get rid of; throw out. **4.** To kill or destroy: *a despot who disposed of all his enemies, real or imagined.*

ETYMOLOGY: Middle English *disposen*, from Old French *disposer*, alteration (influenced by *poser*, to put, place) of Latin *dispōnere*, to arrange : *dis-*, apart; see dis– + *pōnere*, to put; see **apo-** in Appendix I.

OTHER FORMS: **dis·pos′er** —NOUN

The American Heritage® Dictionary of the English Language, Fourth Edition. Copyright © 2000 by Houghton Mifflin Company. Published by the Houghton Mifflin Company. All rights reserved.

Ads by Gc
Collection of Computer Copiers M Environme Friendly D www.newte
Electronic Recycling We pickup DC/MD/V owned; La Secure www.TURT
LANE

dispose. The American Heritage® Dictionary of the English Language: Fourth Edition 2000 Page 2 of 2

Google Search

Click here to shop the Bartleby Bookstore.

Welcome · Press · Advertising · Linking · Terms of Use · © 2007 Bartleby.com

Harry Potter amazon.com Privacy Information

Click for a taste of the new McSkillet BURRITO
At participating locations. ©2007 McDonald's
I'm lovin' it





Case 1:06-cv-00378-JJF Document 3-3 Filed 12/14/2007 Page 35 of 49

Harry Potter amazon.com Privacy Information

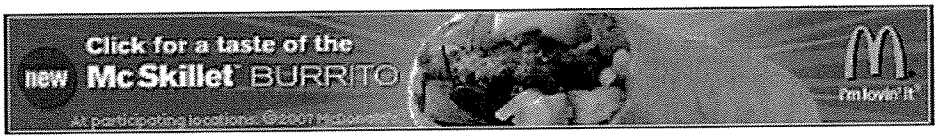

Ads by Go

H Jor

Best E
Falklan
depth lc
Darw
davidjke

Advertise

The American Heritage® Dictionary of the English Language: Fourth Edition. 2000.

around

SYLLABICATION: a·round

PRONUNCIATION: ə-round'

ADVERB: **1a.** On all sides: *dirty clothes lying around.* **b.** In close to all sides from all directions: *a field bordered around with tall trees.* **2.** In a circle or with a circular motion: *spun around twice.* **3.** In circumference or perimeter: *a pond two miles around.* **4.** In succession or rotation: *passed the collection plate around; seasons that rolled around each year.* **5.** In or toward the opposite direction or position: *wheeled around to face the attacker.* **6a.** To or among various places; here and there: *wander around.* **b.** To a specific place: *Come around again sometime.* **7.** In or near one's current location: *waited around for the next flight.* **8.** From the beginning to the end: *frigid weather the year around.* **9.** Approximately; about: *weighed around 30 pounds; around $1.3 billion in debt.*

PREPOSITION: **1.** On all sides of: *trees around the field.* **2.** In such a position as to encircle or surround: *a sash around the waist.* **3a.** Here and there within; throughout: *on the political stump around the country.* **b.** In the immediate vicinity of; near: *She lives around Norfolk.* **4.** On or to the farther side of: *the house around the corner.* **5.** So as to pass, bypass, or avoid: *a way around an obstacle; got around the difficulty somehow.* **6.** Approximately at: *woke up around seven.* **7.** In such a way as to have a basis or center in: *an economy focused around farming and light industry.*

ADJECTIVE: **1.** Being in existence: *Our old dog is no longer around.* **2.** Being in evidence; present: *asked if the store manager was around.*

IDIOM: **been around** *Informal* Had many and varied experiences; been experienced in the ways of the world: *a young executive who has been around.*



ETYMOLOGY: Middle English : probably *a-*, in; see a–[2] + *round*, circle; see round[1].

The American Heritage® Dictionary of the English Language, Fourth Edition. Copyright © 2000 by Houghton Mifflin Company. Published by the Houghton Mifflin Company. All rights reserved.

CONTENTS · INDEX · ILLUSTRATIONS · BIBLIOGRAPHIC RECORD

‹ arose around-the-clock ›

Google Search

Click here to shop the Bartleby Bookstore.

Welcome · Press · Advertising · Linking · Terms of Use · © 2007 Bartleby.com





EXHIBIT H

MAIL ROOM
JUL 5 1 1996
PAT. & TRADEMARK OFF.

Spruell 7-25-96

PATENT

0140-4118 #8

IN THE UNITED STATES PATENT AND TRADEMARK OFFICE

Applicants: C. Robert Gasparrini
Walter H. Cano
Group Art Unit: 3307

Serial Number: 08/431,799
Examiner: Nguyen, A.

Filed: May 1, 1995

For: CLEANING SYSTEM AND PROCESS FOR MAKING SAME EMPLOYING REDUCED AIR CLEANING FABRIC

4 prt.

Fee ok

Hon. Assistant Commissioner of Patents
Washington, D.C. 20231

RECEIVED
JUL 15 1996
GROUP 3300

Spruell 7-25-96

RESPONSE

Sir:

In response to the Office Action mailed February 27, 1996, Applicants respectfully request favorable reconsideration of the above-referenced application for the reasons set forth below.

Kindly amend the application as follows:

IN THE SPECIFICATION

Please amend the specification as follows:

Page 13, line 22, delete "25", and replace therefor -- 24 --;

Page 16, line 11, delete "low", and replace therefor --reduced--.

IN THE CLAIMS

Please amend the claims as follows:

1. (amended) A device for cleaning a cylinder of a printing press comprising:

a. a core;

b. a reduced air content cleaning fabric having an air content by volume of about 1 to 50 percent, said fabric wrapped around said core; and

c. a solvent comprising a low volatility cleaning compound which does not readily evaporate at ambient temperature and pressure and has a volatility in the range of about zero to 30 percent, said solvent being present in said cleaning fabric in an amount sufficient [to saturate said cleaning fabric whereby said saturated fabric is functional] for cleaning said cylinder of a printing press.

2. (amended) The device for cleaning the cylinders of a printing press as defined in Claim 1 further comprising a sealed sleeve disposed around and in contact with said fabric, [whereby said fabric can be transported and stored vertically and horizontally until use without substantially disturbing the distribution of said fabric and detrimentally affecting the cleaning ability of the fabric] said sealed sleeve containing substantially no air.

11. (amended) The device [for cleaning the cylinders of a printing press as defined in] of claim 1 wherein [the length of] said fabric has a length that is [at least] about [25%] 10 to 50 percent greater than the length of [non-air reduced] non-reduced air content fabric having an equal diameter about said core.

15. (amended) A method for making a cleaning system comprising:

a. obtaining a strip of reduced air content cleaning fabric having an air content by volume of about 1 to 50 percent;

b. contacting said strip of cleaning fabric with a low volatility, organic compound solvent which does not evaporate readily at ambient temperature and pressure and pre-soaking and saturating said cleaning fabric with said solvent to functional equilibrium with said solvent; and

c. wrapping said cleaning fabric around an elongated core and forming a fabric roll.

15 ~~16~~. (amended) The method as defined in claim ~~15~~ 14 further comprising the step of sealing said wrapped, saturated cleaning fabric roll[, whereby] in a substantially liquid impervious material so that said wrapped, saturated cleaning fabric roll can be transported and stored vertically and horizontally until use without substantially disturbing the distribution of said solvent in said fabric roll and detrimentally affecting the cleaning ability of said fabric.

17 ~~18~~. (amended) The method as defined in claim ~~17~~ 16 [further comprising] wherein said step of sealing comprises subjecting said sealable sleeve to a vacuum [and drawing the sealable sleeve into contact with said wrapped fabric roll after disposing said wrapped fabric roll in said sealable sleeve and] to remove substantially all of the air from said sealable sleeve before sealing said sleeve.

Sub 23 24. (amended) The method as defined in claim [22] 23 wherein the step of [reducing the amount of air] obtaining a strip of reduced air content cleaning fabric comprising calendaring said cleaning fabric.

25. (amended) The method as defined in claim [22] 23 wherein the step of [reducing the amount of air] obtaining a strip of reduced air content cleaning fabric is accomplished by reducing the thickness of said cleaning fabric by between about 10% to about 70%.

27. (amended) The method as defined in claim [22] 23 wherein said step of [reducing the air of said cleaning fabric] obtaining a strip of reduced air content cleaning fabric further comprises the step of increasing the length of said cleaning fabric by at least about 25% without substantially effecting the diameter of said fabric roll after the cleaning fabric has been wound about the elongated core.

23 ~~35~~. (amended) The method as defined in claim [31] ~~15~~ 14 further comprising the [step] steps of:

(a) [third,] unwinding at least a portion of said cleaning fabric from said fabric roll;

(b) [fourth,] placing said at least a portion of said cleaning fabric in contact with a cylinder to be cleaned; and

(c) [fifth,] taking-up said at least a portion of said cleaning fabric on a take-up shaft.

Please cancel Claims 8, 10, 13, 26, 28, 29, 30, 31-34 and 36-41 without prejudice or disclaimer.

IN THE ABSTRACT

Please amend the Abstract as follows:

Insert at line 4, after "fabric" --and a method for making the system are disclosed--;

Delete at lines 10-11, "press.¶ The" and replace therefor -- press. The --;

Delete at line 16, "A method for making the system is also disclosed."

IN THE DRAWINGS

Please amend figure 2 as indicated in red in the proposed amended drawing.

REMARKS

By the instant Amendment, Applicants have amended Claims 1, 2, 11, 16, 18, 24-27, and 35 and have cancelled Claims 8, 10, 13, 26, 28, 29, 30, 31-34, and 36-41 without prejudice or disclaimer. Accordingly, Applicants respectfully submit that the Claims, as currently pending, are in condition for allowance.

I. OBJECTIONS TO THE SPECIFICATION

The specification stands objected to because numeral "25" was assigned to both a slit and an end cap. The specification and Figure 2 have been amended so that the slit is referenced by the number "24" and the end cap is referenced by "25".

The specification stands objected to under 35 U.S.C. § 112, first paragraph as failing to provide any specific disclosure of a means for positioning the fabric adjacent to a cylinder and a means for locating the fabric adjacent to a cylinder. Applicants respectfully submit that such means is shown in Figure 5. Furthermore, U.S. Patent Nos. 4,344,361 and 4,757,763 to MacPhee et al., both of which are discussed in the specification, are directed to arrangements for positioning cleaning fabric adjacent to a cylinder to be cleaned.

The specification also stands objected to under 35 U.S.C. § 112, first paragraph for failing to provide any specific disclosure of a mounting means. Applicants respectfully submit that the specification discloses such a means. Specifically, as disclosed in the specification, the mounting means in claim 14 may be a shaft or rod located on a printing press that engages the hollow core of the fabric roll. See page 11, line 27 - page 12, line 4. Thus, the mounting means of claim 14 is fully supported in the specification. Accordingly, Applicants respectfully request that the rejection under 35 U.S.C. §112 be withdrawn.

II. OBJECTIONS TO THE ABSTRACT

The Abstract stands objected to on the basis that it is not limited to a single paragraph. Applicants have amended the Abstract so that it consists of a single paragraph. Accordingly, Applicants respectfully request that the rejection be withdrawn.

III. REJECTIONS UNDER 35 U.S.C. § 112

Claims 12-14 stand rejected under 35 U.S.C. § 112, first paragraph for failure to disclose any specific structure corresponding to a means for positioning the fabric, a

means for locating the fabric, and a mounting means. In order to reduce the issues in this case, Applicants have cancelled Claim 13 without prejudice or disclaimer. With respect to Claims 12 and 14, Applicants respectfully incorporate the comments above regarding disclosure of a means for positioning the fabric and a mounting means and submit that such means are fully disclosed.

Claims 1-30 and 36-44 stand rejected under 35 U.S.C. § 112, second paragraph as being indefinite. In light of the above amendments and foregoing remarks, Applicants respectfully submit that the subject matter of the invention has been particularly pointed out and distinctly claimed. Accordingly, Applicants respectfully request that the rejection under 35 U.S.C. §112 be withdrawn.

With respect to Claims 1, 15 and 36, the language "reduced air content fabric" is objected to as being indefinite. As disclosed in the specification, a reduced air content fabric is a fabric in which all or a portion of the air contained therein has been removed. See page 16, lines 10 et seq. The air may be removed from a fabric during its manufacture or after its manufacture by a process such as calendaring. More specifically, Claims 1 and 15 have been amended to require that the reduced air content fabric have an air content by volume of about 1 to 50 percent.

With respect to Claims 1, 2, 15, 16, and 22-26, Applicants have amended the claims to more particularly point out the structure which they regard as their invention. No new matter has been added.

With respect to Claims 24-27, there was no antecedent basis for "the step of reducing the amount of air." Applicants have amended these claims so that they further

define the step of "obtaining a strip of reduced air content cleaning fabric" found in Claim 15, from which Claims 24-27 depend.

IV. REJECTIONS UNDER § 102

Claims 1-5, 9, 10, 15-22, 28-30, 36, 43 and 44 stand rejected under 35 U.S.C. § 102(a) as being anticipated by Gasparrini et al. (U.S. Patent No. 5,368,157). In particular, Gasparrini et al. is cited as disclosing a reduced air content fabric. Applicants respectfully submit that Gasparrini et al. does not teach a reduced air content fabric as claimed.

Gasparrini et al. is directed to a pre-packaged, pre-soaked fabric roll for use in cleaning cylinders of printing presses. By enclosing a saturated fabric roll in a heat-sealable plastic sleeve, Gasparrini et al. overcame many of the disadvantages of the prior art. Specifically, Gasparrini et al. is directed to removing air from the plastic sleeve, not the fabric itself. A vacuum is applied once the fabric roll is inserted in the sleeve so that the vacuum "exhaust[s] any air from the interior of the sleeve . . . ." Gasparrini et al., col. 6, line 34 (emphasis supplied). In an alternative embodiment, holes in the plastic sleeve similarly "permit exhaustion of air from the sleeve . . . ." Gasparrini et al., col. 6, lines 45-46 (emphasis supplied). Because no air is removed from within the fabric itself, the air content of the fabric remains unchanged.

The present invention is an improvement on Gasparrini et al. Although Gasparrini et al. is directed to reducing the air within the plastic sleeve, some air remains in the fabric itself. The present invention discloses a novel method and structure wherein even

less migration of the solvent occurs because a smaller amount of air is retained within the fabric itself and thus, in the plastic sleeve.

In contrast to Gasparrini et al., the present invention is directed to the structure --the air content-- of the fabric. There is a sharp difference between the sleeve containing the pre-soaked fabric roll and the fabric which is contained in the sleeve. As amended, the claimed reduced air content fabric is a fabric that contains only 1 to 50 percent air by volume. The air is removed prior to the fabric being saturated either during its manufacture or after its manufacture by a process such as calendaring. When sealed in a substantially liquid impervious material, a reduced air content fabric further prevents the migration of solvent. Thus, the equilibrium of the packaged cleaning fabric will undergo less modification during storage. Additionally, regardless of the fabric's packaging, the reduced air content allows for absorption of the proper amount of solvent. Because Gasparrini et al. is not directed to a reduced air content cleaning fabric, Applicants respectfully submit that the claimed invention is novel over the art cited.

V. REJECTIONS UNDER 35 U.S.C. § 103

Claims 6-18, 11-14, 31, 33, 35 and 37-42 stand rejected under 35 U.S.C. § 103 as being unpatentable over Gasparrini et al. Applicants respectfully incorporate the comments regarding Gasparrini et al. noted above. An additional benefit of employing a reduced air content fabric is that the length of fabric on a roll of a given diameter is greater than the length of non-reduced air content fabric on a roll of the same diameter. Applicants further note that Claims 7 and 37 claim a cleaning fabric having a reduced thickness.

Gasparrini et al., on the other hand, achieves its objects by disposing a fabric roll in a plastic sleeve and removing air from the sleeve. Thus, the reference is not directed to optimizing the length or thickness of the fabric itself.

Claims 23-27, 32, 34 and 38 stand rejected under 35 U.S.C. § 103 as being unpatentable over Gasparrini et al. in view of Meiser et al. With regard to these claims, Applicants respectfully incorporate the comments regarding Gasparrini et al. noted above. Additionally, Meiser et al. fails to suggest calendaring to reduce the air content of a cleaning fabric. In fact, Meiser et al. teaches away from calendaring to reduce the air content of a fabric.

Meiser et al. is directed to a method for reducing the amount of moisture in a web. The web is advanced through a liquid bath "prior to entering the nip." Meiser et al., col. 3, lines 26-29. Thus, Meiser et al. is directed to a "METHOD AND APPARATUS FOR ALTERING THE MOISTURE CONTENT OF RUNNING WEBS." As such, Meiser et al. is directed to calendaring a web after it has been saturated and is wholly unrelated to reducing the air content of a fabric that is to be saturated. Moreover, nothing in Meiser et al. suggests applying its teachings to printing press cylinder cleaning fabrics.

Furthermore, the Office Action states that it would have been obvious to apply the calendaring of Meiser et al. to achieve an optional storage length. Applicants respectfully submit that Meiser et al. suggests no optimization of the length of a web.

In fact, Meiser et al. makes no mention of the length of the web whatsoever. Additionally, because Meiser et al. is directed to use with textiles and dyeing and is directed to leaving moisture in the web, it appears that elongation of the textile web is to be avoided.

See e.g. Meiser et al., col. 3, lines 32-33 Furthermore, elongation of the web seems unlikely because one of the squeezing rollers is cushioned so that the calendaring affect is lessened. Moreover, the pressure required to leave 60-80% of the moisture in a web is inadequate to reduce the air content or increase the length of the web. See Meiser et al. at col. 7, lines 25 et seq. Therefore, Meiser et al. does not teach calendaring which optimizes the storage length of a web.

Accordingly, Applicants respectfully submit that the pending claims are neither anticipated nor rendered obvious by the cited references.

VI. CONCLUSION

In light of the foregoing Amendments and Remarks, Applicants respectfully submit that the claims, as currently pending, are in a condition for allowance. In sum, neither Gasparrini et al. nor Meiser et al. suggests obtaining or using a reduced air content fabric. Accordingly, Applicants respectfully request favorable reconsideration of the above-referenced application.

If any issues remain, or if the Examiner has further suggestions for expediting allowance of the above-referenced application, the Examiner is kindly invited to contact the undersigned at the telephone number below.

The Examiner's favorable reconsideration is greatly appreciated.

The Commissioner is hereby authorized to charge any additional fees which may be required for this amendment, or credit any overpayment to Deposit Account No. 13-4500, Order No. 0140-4118.

In the event that an extension of time is required, or which may be required in addition to that requested in a petition for an extension of time, the Commissioner is requested to grant a petition for that extension of time which is required to make this response timely and is hereby authorized to charge any fee for such an extension of time or credit any overpayment for an extension of time to Deposit Account No. 13-4500, Order No. 0140-4118. A DUPLICATE COPY OF THIS SHEET IS ATTACHED.

Respectfully submitted,

Date: June 26, 1996

By: 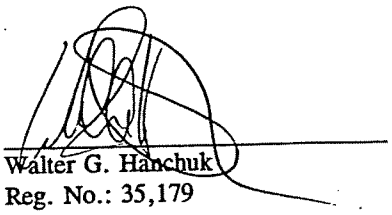

Walter G. Hanchuk
Reg. No.: 35,179

MORGAN & FINNEGAN, L.L.P.
345 Park Avenue
New York, New York 10154
(212) 758-4800
(212) 751-6849 (FAX)