EXHIBIT D

(Part 2 of 5)

5.2.5 Console Motherboard

The layout of the motherboard for the console is shown in Figure 5-8. This board is the interface for all connections within the console. The interconnecting cables from the loading frame and load cell, and cables from an optional recorder and strain measuring devices, extend through a cutout in the rear panel to the connector locations shown on the right-hand side of the board.

Additional connectors shown on this board are interfaces to the IEEE-488 and Printer connectors on the rear panel and the plug-in locations for the circuit boards. The basic boards are Load, Crosshead Control and CPU (Central Control Board). The other board locations are for the options (Recorder, Strain 1 and 2, Microcon and IEEE) in an expanded system.

Two switches, S4 and a section of S5, located at the lower right-hand corner of the motherboard control the operating units for the system. S4 is a 3-position toggle switch, labelled SI/ENGLISH/METRIC, which sets units for parameters in the load and optional extension channels (see Sections 6.9 and 8.6). The position of this switch is also shown by the units designator on the basic panel. S5 is a switch assembly with eight separate switches. The section labelled STRAIN UNITS sets the scaling for the optional strain channels (see Section 8.11.2).

5.3 LOAD CELLS

5.3.1 General Characteristics

The load cells used in Instron universal testing instruments make use of strain gages to detect the

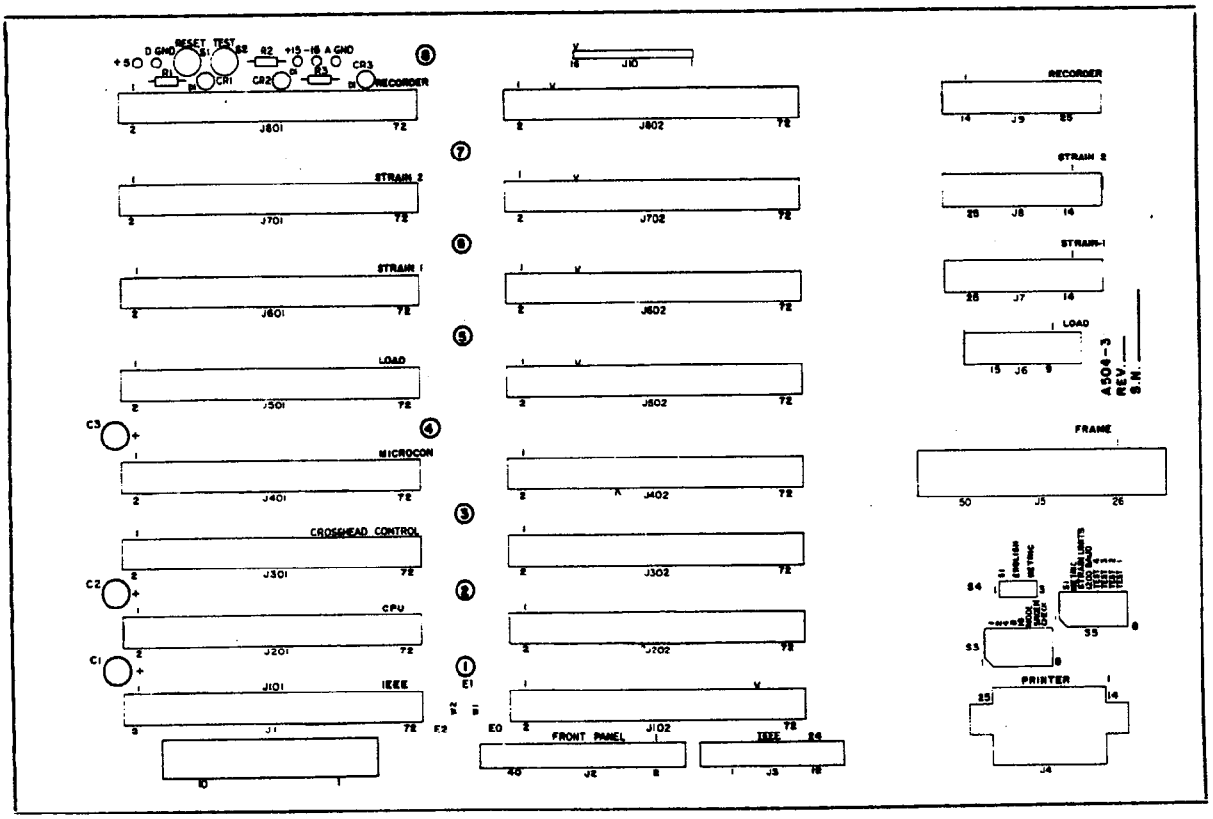

Figure 5-8. Control Console Motherboard

load being applied to a specimen. These gages consist of etched foil intimately bonded to an elastic element which deforms slightly under an applied load. With this type of structure, the resistance of the foil will change in direct proportion to deformation of the element.

Multiple gages are used in each cell, and are connected as arms of a balanced, temperature compensated Wheatstone bridge. These gages are mounted so that the direction of the resistance change will contribute to the net unbalance of the bridge. Thus, with excitation applied to the bridge and an appropriate amplifying circuit, small unbalances are detected as a voltage which is used to accurately indicate the amount of load being applied to the element.

5.3.2 Series 4200 Load Cells

The complete line of existing Instron load cells, either electrically or mechanically calibrated and within the load range of a system, are adaptable to a 4200 series testing instrument. However, eight load cells were designed specifically for use with the series; a typical tension cell and a compression cell are shown in Figures 5-9 and 5-10, respectively. These dedicated cells consist of four tension only and four compression only types with maximum capacities of 50 N, 500 N, 5 kN and 10 kN, as shown in Table 5-1. These cells are calibrated in SI units (newtons) only when manufactured. Operation of the testing system in equivalent English and metric units is easily selected on the 4200 series control console.

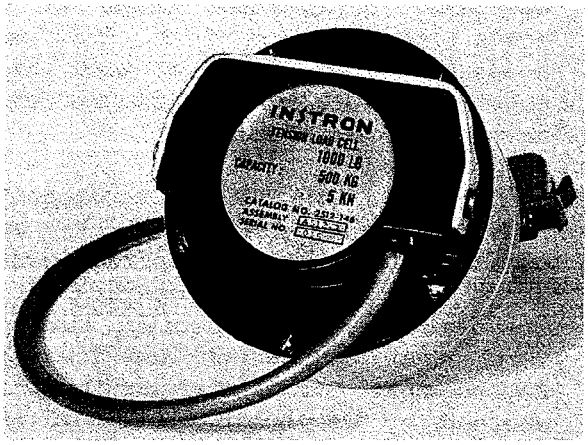

Figure 5-9. Tension Load Cell -4200 Series



Figure 5-10. Compression Load Cell -4200 Series

Table 5-1. Dedicated 4200 Series Load Cells

Tension Cells Catalog No.	Rated Maximum Capacity	Compression Cells Catalog No.
2512-144	50 N, 10 lb, 5 kg	2512-227
2512-145	500 N, 100 lb, 50 kg	2512-228
2512-146	5 kN, 1000 lb, 500 kg	2512-229
2512-147	10 kN, 2000 lb, 1000 kg	2512-230

The design of the eight dedicated load cells includes a cantilevered beam as the active element upon which the strain gage bridge is mounted. The element is connected by a pullrod to a load-bearing diaphragm, which supports a clevis for coupling to specimen grips or an anvil (see Figures 5-11, 5-12 and 5-13). The capacity of each cell depends on the size diaphragm used to suspend the clevis.

The 50 N and 500 N low capacity tension cells (Figure 5-11) are overload protected by spring-loaded stops. This mechanism operates at a load greater than capacity, but before other components are damaged. Beyond this point, the coupling is stopped by the bottom cover of the cell.

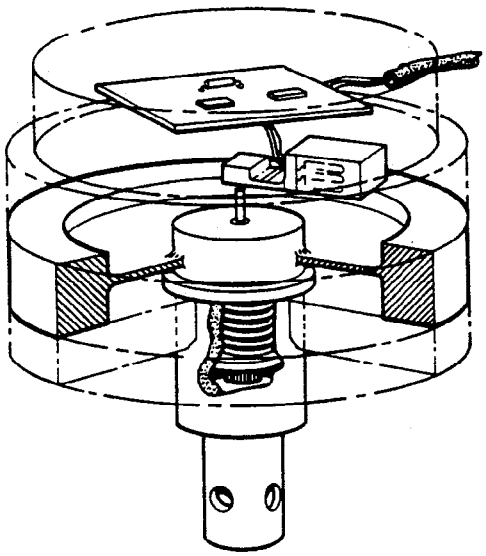

Figure 5-11. Tension Load Cell - 50 N and 500 N Detailed Assembly

Assembly details of the 5 kN and 10 kN tension cells are shown in Figure 5-12. The higher capacity of these cells is possible due to the use of different diaphragms.

The compression load cells (Figure 5-13) are overload protected by

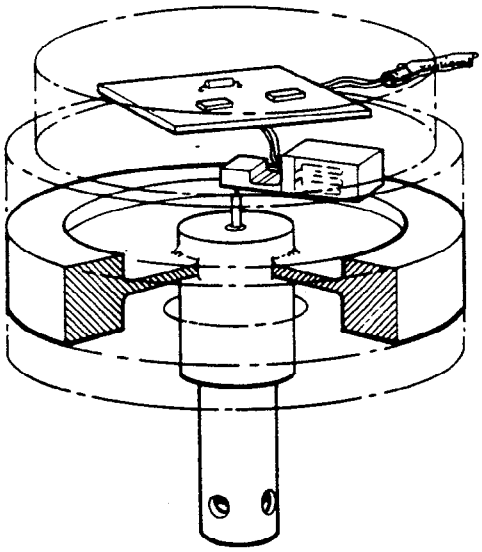

Figure 5-12. Tension Load Cell - 5 kN and 10 kN Detailed Assembly

the load-bearing diaphragm which can deflect to the top cover. At this point, it is stopped before internal components are damaged. These cells include an additional external diaphragm which minimizes errors due to eccentric loads.

CAUTION

Do not use the 4200 series single mode load cells in any mode other than that specified for each type, tension or compression. Although an output will occur, the accuracy is not specified and no overload protection is provided.

When the electrical calibration of a 4200 series load cell is initiated, a signal is generated from the cell by unbalancing the strain gage bridge. This is caused by the switching of a special shunt resistor from across one leg of the bridge to an adjacent leg. The imbalance is designed to be equal to the required calibration load. The switching action is accomplished

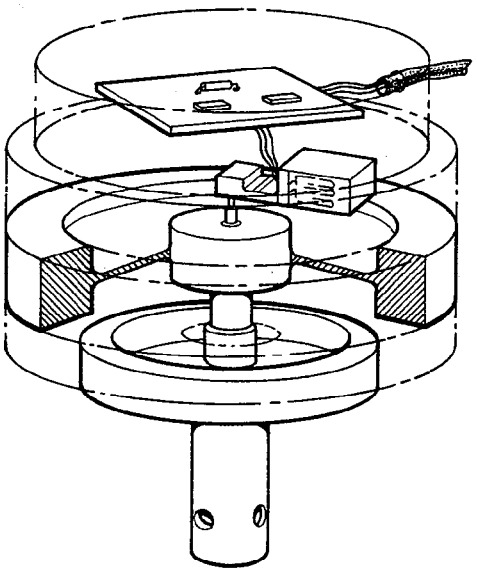

Figure 5-13. Compression Load Cells Detailed Assembly

through a relay mounted in the cell which is addressable through the front panel functions of the control console. Hence, calibration, after being initiated, is automatic.

The calibration of a 4200 series load cell is a two-point function based on zero (no load) and the calibration point. The calibration point, established for each cell during manufacture, occurs approximately at $^1/_2$ the maximum rated capacity of the cell in SI units (newtons).

Each load cell contains a special resistor which has an ohmic value unique to each type. This resistor enables a cell to be identified by the 4200 control console, thereby permitting electronic overload protection to be automatically set at 102% of a cell's maximum loading capacity.

The 4200 series load cells contain a preamplifier for the output signal. By preamplifying the low level strain gage bridge output at the source, an accurate signal is provided which is immune from noise pickup in the connecting cable. The preamplifier, self-identifying resistor, calibration relay and other bridge compensating and balancing components are mounted in the cap of the cell.

The load cells are ruggedly made but, as with any transducer, should be handled with care and stored in the box supplied with each cell when not in use. Each cell is labeled as to its rated capacity and equipped with a convenient carrying handle.

5.3.3 Load Cell Adapters

Load cells require couplings for the attachment of specimen grips for tension testing and anvils for compression testing. Several sizes of these adapters are optionally available for use with the 4200 series of load cells, as shown in Figures 5-14 and 5-15 and listed in Tables 5-2 and 5-3. An optional 6-inch (152 mm) diameter compression table, Instron Catalog No. 2501-122, is available that mounts on the base grip adapter of the loading frame.

5.3.4 Tension Load Cells - Low Capacity

Additional load cells available from Instron include several low capacity tension cells which are intended primarily for use in testing fiber, light yarn and fine wire. These cells use a very sensitive bending beam to which a light wire is attached that extends through the base. A hooked extension wire is provided with each cell for attaching either small clamps or rings. A specimen can be secured in this manner either by cementing or other technique, depending upon the type of material. Positive stops limit the deflection of the beam, so that it can not be damaged by any normal overload.

These cells, listed in Table 5-4, are electrically calibrated but are

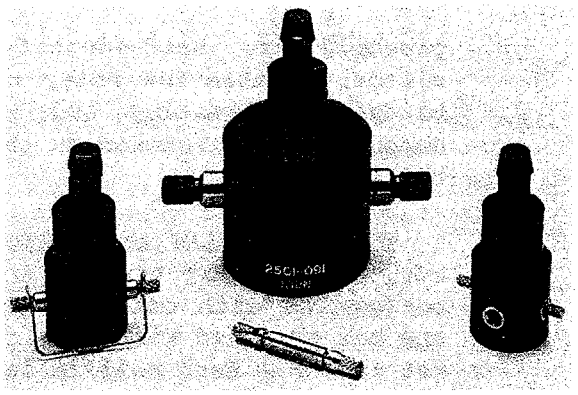

Figure 5-14. Tension Couplings -4200 Series Cells

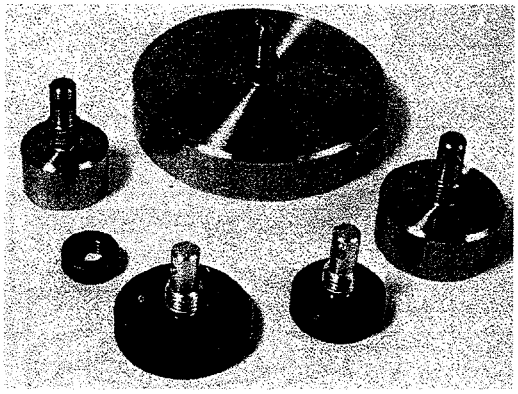

Figure 5-15. Compression Anvils -4200 Series Cells

Table 5-2. Tension Coupling Assemblies

Catalog No.	Maximum Capacity	Grip Stem Dia.	Clevis Pin Dia.
2501-109	50 N, 10 lb, 5kg	0.500 in. (12.7 mm)	0.187 in. (4.8 mm)
2501-094	10 kN, 2000 lb, 1000 kg	0.625 in. (15.9 mm)	0.250 in. (6.4 mm)
2501-091	10 kN, 2000 lb, 1000 kg	1.250 in. (31.8 mm)	0.500 in. (12.7 mm)

Table 5-3. Compression Anvil Assemblies

Catalog No.	Maximum Capacity	Anvil Diameter
2501-107	50 N, 10 lb, 5kg	1.60 in. (40.6 mm)
2501-108	50 N, 10 lb, 5kg	2.25 in. (57.3 mm)
2501-104	10 kN, 2000 lb, 1000 kg	1.60 in. (40.6 mm)
2501-105	10 kN, 2000 lb, 1000 kg	2.25 in. (57.3 mm)
2501-106	10 kN, 2000 lb, 1000 kg	5.00 in. (128.2 mm)

non-rationalized, that is they do not contain a resistor for self-identification by the 4200 series load weighing system.

The calibration procedure, as described in Chapter 7, differs slightly from that used with a dedicated cell. As these cells do not contain a preamplifier, as is used by the dedicated cells, an external preamplifier, Catalog No. 2210-829, is available which mounts on the rear of the moving crosshead. Complete installation instructions are included with this device.

Table 5-4. Low Capacity Load Cells

Tension Cell Catalog No.	Maximum Capacity	Lowest Range
2512-136	50 g	0-5 g
2512-101	500 g	0-50 g
2512-122	5 N	0-.5 N

6.0 PREPARING FOR OPERATION

6.1 PRELIMINARY CONSIDERATIONS

The purpose of this chapter is to provide the user with details of the operational features of the Model 4201 or 4202 instrument. Included in this chapter is the function of all controls and indicators on the basic and optional panels that supply the operator interface to the instrument. These should be studied by the user so the application of each device and its purpose in the calibration and operation of the system will be understood. Included in this chapter are descriptions of the system data storage capability and self-test feature. Also included are certain pretest functions (Sections 6-6 through 6-11) that can be done before applying power to the system, such as the selection and installation of load cells, grips and fixtures.

The operational capabilities of a 4200 series testing instrument depend upon the installed options and the peripheral readout and control devices that have been selected to be used with the system. All of the console-mounted options, including panels and plug-in boards, ordered initially with a system are installed at the factory and are ready to use. Complete installation instructions are supplied with any option ordered later to expand a system. Figure 6-1 shows the panels on a fully expanded control console.



Figure 6-1. A 4200 Series Fully Expanded Control Console

6.2 FUNCTION OF CONTROLS AND INDICATORS

6.2.1 Basic Panel

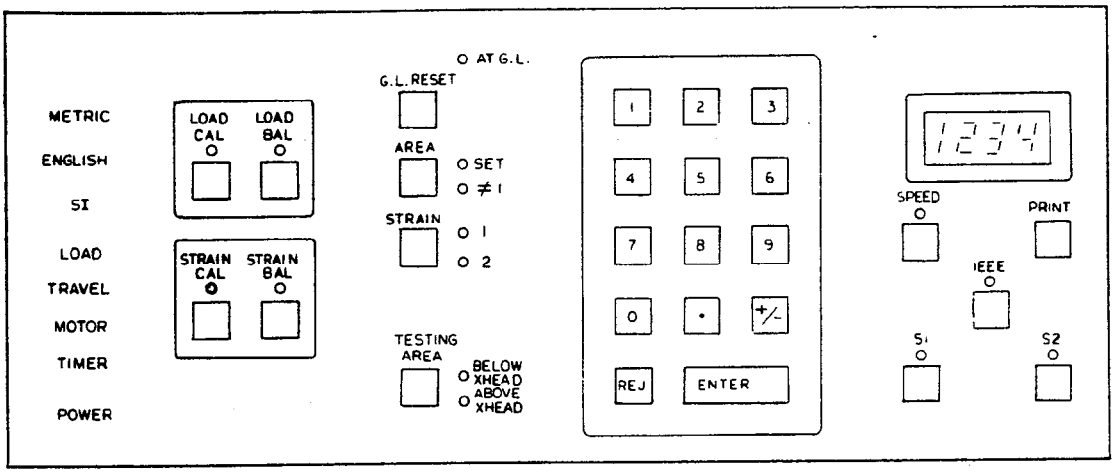

Figure 6-2. Basic Panel

Table 6-1. Function of Basic Panel Controls and Indicators

CONTROL or INDICATOR	FUNCTION
Numeric Keyboard	(a) Keys, 0 through 9, allow entry of: 1. Value of calibration signal for mechanically calibrated transducers. 2. Desired crosshead speed. 3. Area compensation value. 4. Maximum and minimum electronic limits for load, extension and strain. 5. Recorder time base or position scale factor. 6. Preset points. (b) +/- key defines the values of load, extension and strain as + for tension testing and - for compression testing. This key is used when entering the electronic limits. (c) REJ key allows the rejection of an incorrect input on keypad before pressing ENTER key. (d) ENTER key must be pressed to change any system variable entered on keypad or to complete a transducer calibration/balance procedure.
Display	A 4-digit display used to view system variables in the range from .0001 to 9999. "EEEE" is shown if an overflow of the display register occurs. A "----" is shown when the system is uncalibrated and no valid data can be read. "LOSS" is shown if the non-volatile memory is reset to a default state. All keypad entries (0-9, +/-) are read on this display.

Table 6-1. Function of Basic Panel Controls and Indicators (continued)

CONTROL or INDICATOR	FUNCTION
AT G.L.	Gage length indicator lamp is lit whenever crosshead is at gage length. Lamp flashes when power is initially turned on, or a momentary power loss occurs to indicate a loss of gage length information. Pressing G.L. RESET key or moving crosshead by pressing UP, DOWN, RETURN or JOG will stop flashing.
G.L. RESET	Gage length reset key, when pressed, causes current crosshead position to be entered as the gage length. Also, any value on EXTENSION readout will be set to zero. Pressing this key will cause the AT G.L. lamp to stop flashing.
AREA SET ≠1	Enables an area compensation circuit which divides both displayed load value and output voltage to a recorder by a set value between 1.000 and 9.999. When this key is pressed, the SET lamp will light and an area value can be entered on the keypad, as described in Section 7.8.4. After the ENTER key is pressed, if the value of area compensation is other than 1.000, the ≠1 lamp will light and the SET lamp will stay on. Area compensation is temporarily set to 1.000 during a load cell calibration procedure. The default value of area compensation is 1.000 (see Table 6-5).
STRAIN 1 2	Selects signal from Strain Channel 1 or 2 to be active. Lamp "1" or "2" will light to show choice. If a Strain Board is not installed in the selected channel, the channel can not be enabled and the related lamp will not light.
TESTING AREA BELOW XHEAD ABOVE XHEAD	Defines the location in the loading frame to be used for specimen testing. This function is necessary for the proper operation of cycling limits and pneumatic grips (see Section 7.8.6). To change this function, the S1 key must be enabled and "SL" must be on the Basic Panel Display (see Table 6-1). The BELOW or ABOVE lamp lights to indicate selection.
SPEED	Allows a desired crosshead speed to be entered on numeric keyboard. If the loading frame has not been identified, display will show "----" when this key is pressed. Speeds for the Model 4201 range from 0.5 to 500 mm/min (0.020 to 20 in/min) for loads up to maximum capacity (5 kN, 1125 lb, 500 kg). Speeds for the Model 4202 range from 0.5 to 500 mm/min (0.020 to 20 in/min) for loads to 5 kN (1125 lb, 5 kg), and up to 250 mm/min (10 in/min) for loads between 5 to 10 kN (1125 to 2250 lb, 500 to 1000 kg).

Table 6-1. Function of Basic Panel Controls and Indicators (continued)

CONTROL or INDICATOR	FUNCTION
LOAD CAL	Initiates a load cell calibration procedure (see Chapter 7). The LOAD CAL key lamp is lit during calibration or when a load calibration relay is closed. A flashing lamp indicates a calibration error. A test cannot be started during a calibration procedure, and calibration is locked out during a test.
LOAD BAL	Sets a load cell balance, or zero, during a calibration procedure or when balancing out the tare of grips and fixtures before starting a test. The LOAD BAL key lamp is lit during a balance operation or if a load calibration relay is closed. A flashing lamp indicates a calibration or balance error. A test cannot be started during a balance operation, and the balance function is locked out during a test.
STRAIN CAL	Initiates a strain transducer calibration (see Chapter 8). The STRAIN CAL key lamp is lit during calibration or if a strain calibration relay is closed. A flashing lamp indicates a calibration error. The The active strain channel (1 or 2) cannot be changed during a strain calibration procedure. A test cannot be started during a calibration procedure, and calibration is locked out during a test.
STRAIN BAL	Sets a strain transducer balance, or zero, during a calibration procedure or when rebalancing before starting a test. The STRAIN BAL key lamp is lit during a balance operation or when a strain calibration relay is closed. A flashing lamp indicates a calibration or balance error. A test cannot be started during a balance operation, and the balance function is locked out during a test.
METRIC ENGLISH SI	Status indicators that show the operating units for the load and strain channels. The indicator that is lit shows the current status of the units, as determined by the positioning of a switch (S4) mounted internally on the motherboard of the console. The selection of units determines the scaling of displays and the input to a recorder. After switching units (see Section 6.9) the Basic Panel display will show "LOSS", indicating that nonvolatile memory is reset to the default state and stored test data is lost. Load and strain channels must be recalibrated and all electronic limits reset.
LOAD	Status indicator that lights when a load overrange (102% or greater of load cell maximum capacity) occurs. The crosshead stops and the lamp flashes

Table 6-1. Function of Basic Panel Controls and Indicators (continued)

CONTROL or INDICATOR	FUNCTION
LOAD (continued)	until the overload is cleared by pressing the UP or DOWN key or a JOG key on Crosshead Control Panel, whichever direction decreases the measured load.
TRAVEL	Status indicator that lights when the overtravel limits for the moving crosshead are actuated. The crosshead is stopped when this lamp is lit.
MOTOR	Status indicator that functions as described below. Lamp is on steady for the following conditions: 1. Motor drive enabling sequence (5 s duration). 2. Motor drive faulty (cannot be enabled). 3. Loading frame cannot be self-identified. 4. Loading Frame power supply failure. 5. Manual Positioning Control Access Door open. 6. Crosshead second level travel limit tripped. 7. DIN Stop Switch option tripped. Lamp is on flashing for the following conditions: 1. Drive motor overheats. 2. Drive loop failure (stall, etc.) The MOTOR status indicator will remain on (steady or flashing) after the condition/fault is cleared, except after the 5-s motor drive enable sequence. Perform the key sequence [S1] [1] [ENTER] to restore the indicator to standby (off) condition.
TIMER	Status indicator that lights when CPU malfunctions and a special circuit shuts off crosshead drive motor. Usually, momentarily shutting down system power clears this condition. This lamp also lights if the ±15 Vdc console power supply fails.
POWER	Status indicator that lights if a momentary power failure occurs. Momentarily shutting down system power clears this condition.
PRINT	Initiates a print sequence when the system includes an optional printer.
IEEE	Enables an IEEE-488 bus to receive keyboard (K) commands from an external computer. When the IEEE lamp is lit, the bus is enabled. The lamp will not light if the option is not installed in the system.
S1	Enables or disables system options, as follows: a. System reset option with clearing of nonvolatile memory - press S1, then 0 and ENTER on keypad. This sequence clears the nonvolatile memory (Section 6.3), setting all variables to a default state, and thereby resetting the system to

Table 6-1. Function of Basic Panel Controls and Indicators (continued)

CONTROL or INDICATOR	FUNCTION
S1 (continued)	a known condition. Also, any previously stored test data will be lost. The Basic Panel Display will show "LOSS" after this type of Reset key sequence is entered. b. System reset option without clearing of nonvolatile memory - press S1, then 1 and ENTER on the keypad. This sequence is a "warm restart" of the system which is used to reset certain fault conditions and indicators, without resetting nonvolatile memory to the default state; that is, all previously entered parameters and the results of the last test will remain in storage. An exception is when this sequence is used to enable a change in system operating units, as described in Section 6.9.1. c. Diagnostic monitor - press S1, then 2 and ENTER on keypad. This sequence initiates the diagnostic troubleshooting routine which is part of the Resident Test Program for the 4200 series control console. (See Resident Test Program, Section 6.4 for details and exiting procedure.) **NOTE** The Diagnostic Monitor feature should be used by qualified maintenance personnel only. Details are provided in a separate manual. d. Energy option - press S1, then 3 and $^{+}/_{-}$ on keypad. With an optional printer installed, this sequence provides an energy printout after a test. The Basic Panel Display must show "SL 3" for this option to be enabled, and "SL-3" to be disabled which is the default condition. The key sequence [S1] [3] [$^{+}/_{-}$]...[$^{+}/_{-}$] toggles between these two conditions. (See item g below for the selection of the Energy Integration Variable.) e. Preset Point option - press S1, then 4 and $^{+}/_{-}$ on keypad. With an optional printer installed, this sequence provides a printout of load and energy at two preset points (PPT1, PPT2) versus an independent variable after a test. These values can be used to determine modulus of elasticity. (See item f below for selection of independent variable.) The Basic Panel Display must show "SL 4" for this option to be enabled and "SL-4" to be disabled which is the default con-

Table 6-1. Function of Basic Panel Controls and Indicators (continued)

CONTROL or INDICATOR	FUNCTION
S1 (continued)	dition. The key sequence [S1] [4] [+/-]...[+/-] toggles between these two conditions. f. Set Preset Point Values - if the values of the Preset Points (PPT1, PPT2) are to be other than the default values as shown in Table 6-5, then the following key sequences are used to enter new values (where PPT1 and PPT2 are indicated, enter the actual numerical value on the keypad of the independent variable: Extension in inches or millimeters, or strain in percent): [S1] [41] PPT1 [ENTER] Set value of PPT1 [S1] [42] PPT2 [ENTER] Set value of PPT2 g. Select Energy Integration Variable and Preset Points Independent Variable - the key sequence [S1] [5] [+/-]...[+/-] toggles the selection of energy and preset points variable between Extension and Strain (that is, the active strain channel). The basic panel display will show "SL 5" for Extension and "SL-5" for Strain. The default variable is Strain, if this option is installed. If Strain is not installed, then Extension is the default variable. h. Autoprint option - press S1, then 6 and +/- on keypad. With an optional printer installed, this sequence provides an automatic printout each time a test ends. The basic panel display must show "SL 6" for this option to be enabled, and "SL-6" to be disabled which is the default condition. The key sequence [S1] [6] [+/-]...[+/-] toggles between these two conditions. i. TESTING Area enable - press S1, "SL" will show on Basic Panel Display and TESTING AREA function can be changed (see Section 7.8.6).
S2	Unassigned

6.2.2 Display Panel

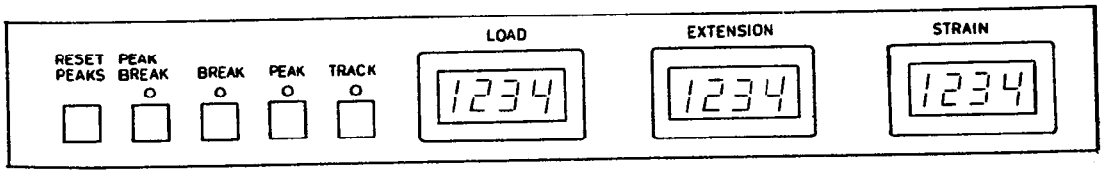

Figure 6-3. Display Panel

Table 6-2. Function of Display Panel Controls and Indicators

CONTROL or INDICATOR	Function
LOAD DISPLAY	A 4-digit display which indicates + and - values of load between .0001 and 9999. The display shows "----" when the load cell is uncalibrated; is blank without data; and shows "EEEE" when overranged.
EXTENSION DISPLAY	A 4-digit display which indicates + and - extension values between .0001 and 9999 from gage length. The display shows "----" if the loading frame has not been identified, and is blank if no data available.
STRAIN DISPLAY	A 4-digit display which indicates strain values between .0001 and 9999. The display shows "----" if the strain channel is not calibrated, "EEEE" if it is overranged, and is blank if neither strain option (1 or 2) is installed or no data is available.
TRACK	Sets the displays to show instantaneous values of load, extension and strain. The displays are updated every 300 msec during a test. The TRACK lamp is lit when this key is active. (Peak and break values are recorded even though tracking is active.)
PEAK	Sets the displays to show load, extension and strain values that occur at the peak load during a test. These values are held on the display at the end of a test. When a test begins, the displays show current tracking values until a "peak" load is reached. The PEAK lamp is lit when this key is active.
BREAK	Sets the displays to show load, extension and strain at specimen break, where break is defined as just prior to break detection. When a test begins, the displays are blank and remain blank until the break criteria is met. The BREAK lamp is lit when this key is active.
PEAK BREAK	Sets the LOAD display to show the peak load value for a test and the EXTENSION and STRAIN displays to show values that occur at specimen break. The lamp at this key is lit when the key is active.
RESET PEAKS	This key is used during a test to reset the stored peak values of load, extension and strain to the values at the current load. The peak storage is then continuously updated to the values at the next peak load that occurs during the remainder of the test. This key does not change which values are selected to be displayed (Break, Peak or Track), and it is functional only when a test is in progress.

6.2.3 Limits Panel

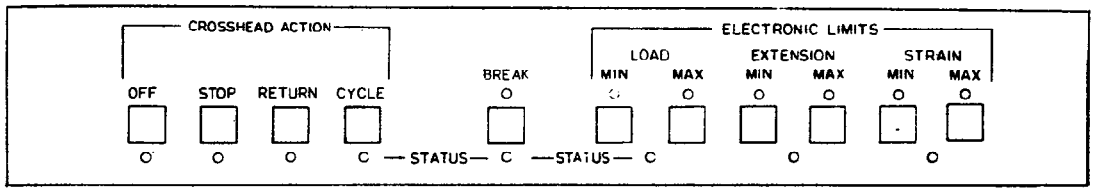

Figure 6-4. Limits Panel

Table 6-3. Function of Limits Panel Controls and Indicators

CONTROL or INDICATOR	FUNCTION
LOAD EXTENSION — LIMITS STRAIN BREAK — Detection	Electronic limits which permit an action to be independently assigned to the maximum and minimum values of load, extension or strain, or to detect break. A lamp above each key lights when the key is pressed. This shows that the key has enabled the numeric keypad and a limit value can be entered and viewed on the display (except BREAK, as this has an unknown numeric value). If the Recorder Panel option is installed, the STRAIN 1 and 2 limits are functional only if STRAIN is selected for the X-axis of the X-Y recorder.
OFF STOP RETURN — CROSSHEAD ACTION CYCLE	Crosshead actions that can be selected to occur at the electronic limits. The actions are: OFF - no action STOP - stop crosshead when limit occurs RETURN - return crosshead to gage length CYCLE - change crosshead travel direction Whenever a limit key lamp is lit, an action key lamp will also be lit. To change the action, press a different key.
STATUS — Lamps	A STATUS lamp is located below the BREAK key and one each below the LOAD, EXTENSION and STRAIN limit keys. When a limit or break detection is selected to cause a crosshead action (except OFF), the related STATUS lamp lights. When either a STOP or RETURN action occurs, the STATUS lamp will flash and stay flashing until recycled by starting a new test. If the current value of load, extension or strain is beyond the assigned limit ranges, then the key on the Crosshead Control Panel (UP or DOWN) which would increase the out-of-range error is disabled. If this disabled key is pressed, the crosshead will not move and the related limit status lamp will flash. The flashing will continue until the enabled key (UP or DOWN) is pressed and the crosshead is moved in a direction to decrease the out-of-range error.

6.2.4 Recorder Panel

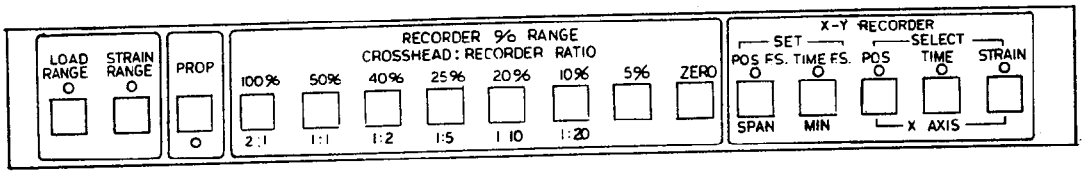

Figure 6-5. Recorder Panel

Table 6-4. Function of Recorder Panel Controls and Indicators

CONTROL or INDICATOR	FUNCTION
LOAD RANGE	When this key is pressed, the current load range appears on the Basic Panel Display. Also, the load range keys are enabled so a new RECORDER % RANGE (gain factor) can be selected. The lamp is lit when the key is active.
STRAIN RANGE	When this key is pressed, the current strain range appears on the Basic Panel Display. Also, the strain range keys are enabled so a new RECORDER % RANGE (gain factor) can be selected. The lamp is lit when the key is active.
PROP	Allows the chart of a strip chart recorder to be driven in proportion to crosshead motion. When this key is pressed, the Basic Panel display shows the current ratio and the CROSSHEAD:RECORDER RATIO keys are enabled so a new ratio can be selected. When using a unidirectional recorder, the chart movement is proportional to the absolute value of crosshead speed. The lamp is lit when the key is active.
RECORDER % RANGE CROSSHEAD:RECORDER RATIO	The upper legend (%) on these keys shows the selection of full scale percentages for the variable which will be calibrated to 10 volts at the recorder. The ZERO key is used to align the recorder axis at zero. The lower legend shows the selection of ratios between the crosshead and recorder chart motions. When a key is pressed, the Basic Panel display will show the selection. A "0000" will be displayed when the ZERO key is pressed, and the recorder input will be at a zero level.

Table 6-4. Function of Recorder Panel Controls and Indicators (continued)

CONTROL or INDICATOR	FUNCTION
X-Y RECORDER SET POS. F.S. TIME F.S.	The SET POS. F.S. (Position Full Scale) key is used to set the crosshead to recorder X-axis tracking scale factor. The value entered on the numeric keypad is the displacement from gage length (0 volts) which is to appear as full scale (10 volts) at the recorder. The lamp is lit when the key is active. The TIME F.S. (Time Full Scale) key is used to program the time base of the recorder X-axis. The value entered on the numeric keypad is the number of minutes required for the recorder to reach full scale (10 volts). The time base is reset to 0 volts when it reaches full scale or on crosshead return. The lamp is lit when the key is active.
X-Y RECORDER SELECT POS. TIME STRAIN	The POS. (Position), TIME, and STRAIN keys select the output parameter which will control the recorder X-axis. The Position and Time keys are used with the SET POS. F.S. and TIME F.S. keys. The STRAIN key is used with the STRAIN RANGE key, and it also activates the Strain Limits. A lamp is lit at an active key.

6.3 DATA STORAGE

6.3.1 Nonvolatile Memory

The data storage capability of a 4200 system control console includes a nonvolatile memory; that is, data remains in storage, even though main power is removed, due to battery backup. The retention period of the nonvolatile memory, with a fully charged battery, is up to ninety days without refreshing.

The variables and system functions stored in nonvolatile memory are shown in Table 6-5. Listed in the table is the initialized (default) value or condition of each variable or function. This default state occurs when the system is reset by the key sequence as described in Section 6.3.2.

6.3.2 System Reset

Press S1 on the Basic Panel, then Press 0 and ENTER on the numeric keypad. The nonvolatile memory will be cleared, including test data from a previous test, and all variables, limits and system functions will be reset to a default value, as shown in Table 6-5. The Basic Panel Display will show "LOSS".

6.3.3 Volatile Memory

The following variables or system functions are volatile, that is, the value of the variable or the function condition will be restored to a default state whenever main power is removed:

Track — Load, Extension, Strain, Energy

(The tracked variables are never stored, but are updated every 50 milliseconds during a test.)

Gage Length - defaults to present crosshead position

Table 6-5. Variables and Functions in Nonvolatile Memory

VARIABLE/FUNCTION	DEFAULT VALUE/CONDITION
Crosshead Speed	0
Area	1.000
Calibration (Both Zero and Scale)	Uncalibrated
Testing Area	BELOW XHEAD
Peak/Track/Break	TRACK
Load Limit/Action (Both MAX and MIN)	0/OFF
Extension Limit/Action (Both MAX and MIN)	0/OFF
Strain Limit/Action (Both MAX and MIN)	0/OFF
Break Action	OFF
Break Storage LD, EX, SN, EN	0 (Blank display)
Peak Storage LD, EX, SN, EN	0 (Blank display)
Strain Channel	1 (or 2 if 1 is not installed)
Preset Points Extension (in) Extension (mm) Strain (%)	PPT1 / PPT2 1 / 3 20 / 60 100 / 300
Preset Points Independent Variable	Strain 1 or 2 (active channel) (or Extension if no Strain channel)
Energy Integration Variable	Strain 1 or 2 (active channel) (or Extension if no Strain channel)
Recorder Time Base Position Scaling Range Axis	 0 0 100% or 1:1 STRAIN
Autoprint Option	Disabled (Reenter S1 -- sequence)
Preset Points Printout	Suppressed (Reenter S1 -- sequence)
Energy Printout	Suppressed (Reenter S1 -- sequence)

6.4 RESIDENT TEST PROGRAM OVERVIEW

The 4200 series control console contains a Resident Test Program which is a feature designed to provide support for several levels of automatic testing of the console. This test program includes a Self Test Routine, a Cyclic Self Test and a Diagnostic Monitor.

NOTE

The Self Test Routine is a basic test intended to supply the user with an operational status of the system console, and is fully described in Section 6.5. The Cyclic Self Test and Diagnostic Monitor are intended for use by qualified maintenance personnel as troubleshooting aids, so this manual provides only a brief description of these features.

The **Self Test Routine** is performed automatically when main power is applied to the system. Its purpose is to provide the user with an initial survey of the operating condition of the console. It tests the console hardware and prevents the startup of normal operation if there are failures on any major circuit board in the console.

When main power is applied to the 4200 system, all lamps (LED's) on the basic and optional panels of the console and the crosshead control panel will light and all displays (LCD)'s will show a number. This action will last for several seconds and allow the user to make a visual check of these functions. After the first part of this test, the Basic Panel Display will show a coded number which will indicate the status of the eight possible major circuit boards (basic and installed options) in the console. If all circuit boards pass this self test, the coded number will disappear and normal operation can begin. If not, the resulting number on the Basic Panel Display will remain and only a continuation of the Resident Test Program can be run.

The **Cyclic Self Test** is identical to the Self Test Routine previously described, except that it is continuously repeated. Its purpose is to assist in locating intermittent failures by long term testing of the console functions. When the test is stopped, all failures occurring during the running period can be identified by interpreting the resulting number that appears on the Basic Panel Display.

The Cyclic Self Test should be used by qualified maintenance personnel. If it is started accidentally (by pressing S1 twice when the Self Test Routine number is displayed), it can be exited to resume normal operation, if there are no failures, by pressing ENTER on the keypad whenever the Self Test number is again displayed.

The **Diagnostic Monitor** is the main troubleshooting mode of the Resident Self Test. It provides interaction with console circuits via front panel controls, and allows a detailed list of errors to be scanned which can directly indicate component failures.

The Diagnostic Monitor mode should be used by qualified maintenance personnel only. If it is started accidentally (by pressing S1 once when the Self Test Routine number is displayed), the word HELP will appear on the Basic Panel Display. This mode can be exited to resume normal operation, if there are no failures, by either pressing REJ (Reject) or by the following procedure: Press S1 to enter the Cyclic Self Test, wait until the Self Test result number is displayed, then press ENTER on the keypad.

6.5 SELF TEST ROUTINE

This section provides information for the system user on the automatic self test feature of the 4200 series console.

The Self Test Routine consists of two parts as described in this section. It is initiated when power is applied to the control console, and cannot be bypassed. The purpose of the Self Test Routine is to assure that the console will perform reliably before allowing normal operation (also see Calibration Overview, Section 7.5.1). The duration of the self test is only several seconds, and it requires no user input or interaction other than observation of the results of the two part sequence. If there are no failures indicated, normal operation can start immediately after the test.

6.5.1 Self Test - Part 1

Apply main power to the console using the system power switch on the loading frame. Within 2 seconds, all front panel lamps (LED's) will light at the same time, including the status indicators and the crosshead control panel switch lamps. Also, at the same time, all front panel displays (LCD's) will show

-1.8.8.8.8

for between 5 to 10 seconds.

During this first part of the self test, the user should scan the panels and check that all LED's light and all LCD's display the proper number. If service is required, the exact condition should be reported.

6.5.2 Self Test - Part 2

After the first part of the Self Test Routine, all LED's will turn off and the LCD's will be blank. This condition will persist for 2 to 5 seconds.

During this second part, the user should again scan the panels and check that all LED's go off and LCD's are blank. Do not press any of the crosshead control switches, as a short circuit test occurs during this part.

When the Self Test Routine has been completed, the Basic Panel Display will show a four-digit test result, as described in Section 6.5.5. All other LCD's should be blank and LED's should be off, except as described in the operating procedures of Chapter 7.

6.5.3 Self Test Result - No Failures

The four-digit test result, which appears on the Basic Panel Display after the Self Test Routine, will disappear after about 5 seconds if no board failures are detected. Normal system operation can then begin, as described in Chapter 7. Also, operation can begin more quickly, if desired, by pressing ENTER on the keypad before the test result disappears.

The REJECT and S1 pushbuttons are active when the test result is displayed, but would not normally be used at this time. Pressing REJECT will recycle the Self Test Routine, and pressing S1 will activate the Diagnostic Monitor which should only be used by qualified maintenaance personnel.

In the case of no failures, the test result is useful only in determining what optional circuit boards are installed in the console. This can be interpreted from the description of the test result in Section 6.5.5. If this information is necessary, the test result should be recorded at this time.

6.5.4 Self Test Result - Failures

When failures have been detected during the Self Test, the test result will be shown on the Basic Panel Display. However, normal operation cannot be started and pressing ENTER on the keypad will have no effect. The test result should be recorded, as it provides important service information.

In the case of failures, where one or more bad circuit boards have been found, only two pushbuttons are active on the front panel of the console, REJECT and S1. If REJECT is pressed, the Self Test Routine will restart in the same manner as if main power was switched off and then on. (An exception to this is the POWER and TIMER indicators. If these LED's were lit before recycling the self test, then retesting can occur only if main power is switched on and off.)

It is possible that no failures will occur when the Self Test Routine is rerun. But, a failure on the first run indicates a possible marginal condition which should be reported.

Pressing the S1 pushbutton will activate the Diagnostic Monitor which is used to further investigate the cause of any failures detected during the self test. This mode should only be used by qualified maintenance personnel.

6.5.5 Self Test Result Display

The four-digit test result, displayed at the end of the Self Test Routine, is designed to show the three possible conditions of the eight basic and optional circuit boards in the control console (see Table 6-6). These conditions are 1) Good, 2) Bad or, in the case of options, 3) Not Installed. This application of the Basic Panel Display is done by addressing each segment of the LCD figures.

Table 6-6. Control Console Boards

Board No.	Functional Name	Basic or Option
1	IEEE-488 Interface	Option
2	Central Processing Unit (CPU)	Basic
3	Crosshead Control	Basic
4	Microcon Interface	*Option
5	Load Sensor Conditioner	Basic
6	Strain 1 Sensor Conditioner	Option
7	Strain 2 Sensor Conditioner	Option
8	Recorder Interface	Option

*The Microcon Interface Board (No. 4) is not included in the Resident Self Test feature. It always shows in the Self Test Result as "good" even though it may not be installed.

Each half of each digit in the display represents a circuit board in the console. The top halves are assigned to optional boards and the bottom halves to basic boards (except No. 4), as shown in Figure 6-6. The numbers in each digit correspond to the listing in Table 6-6.

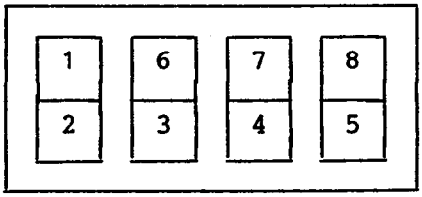

Figure 6-6. Console Board Numbers Assigned to Basic Panel Display for Self Test Result