EXHIBIT D

(Part 1 of 5)

Manual No. M10-4200-1(D)

Manual No. M10-4200-1(D)

Instron Universal Testing Instruments

Model 4201
Model 4202

Operating Instructions

INSTRON

Manual No. M10-4200-1(D)

Instron Universal Testing Instruments

Model 4201
Model 4202

Operating Instructions

INSTRON

PROPRIETARY RIGHTS NOTICE This document and information that it contains are the property of Instron Corporation. Rights to duplicate or otherwise copy this document and rights to disclose the document and such information to others and the right to use the information contained therein may be acquired only by written permission signed by a duly authorized officer of Instron Corporation.

© Copyright 1983 - Instron Corporation

WARNING

Materials testing systems are potentially dangerous, therefore observance of the following safety precautions and awareness of the possible dangers is essential.

OPERATOR SAFETY

Carefully read installation instructions and operating manuals; observe all WARNINGS and CAUTIONS.

Ensure that the test set-up to be followed, and the actual test to be performed does not present a hazard to personnel. Common sense and good judgement are the best safety precautions.

GENERAL SAFETY

The following statements apply to all personnel working on Instron equipment.

1. HIGH SPEEDS AND FORCES

The user of a materials testing system must be aware of its moving operating components which are, at times, potentially dangerous due to high speeds and forces. No one should be permitted to operate a testing system who is unaware of its function or unskilled in its use.

2. DISINTEGRATING TEST SPECIMENS

The hazard from the test specimen is entirely the responsibility of the owner and user of the instrument. In particular, attention is drawn to the hazards of brittle failure, compressive buckling, failure of pressurized vessels, and explosive disintegration.

3. SUPPLY VOLTAGES EXCEEDING 50V

Instron designs do not permit operators to be exposed to voltages exceeding 50V under normal operation of the instrument. However, if any covers are removed from the instrument, care must be taken and all safety precautions applied when carrying out any servicing procedures. Also, if fuses are being changed, it is essential to disconnect the instrument from the main power source.

4. ROTATING MACHINERY

The source of power for rotating machinery may be electrical, hydraulic, pneumatic or compressed gas. Thus it is essential that the test instrument, or equipment, be disconnected from its power source before removing any cover which gives access to rotating machinery, e.g., belts, gears, screws or shafts.

5. MEDIUM AND HIGH TEMPERATURE OVENS AND FURNACES

It is essential that a WARNING notice concerning high temperature operation be displayed whenever high temperature testing equipment is in use; special handling gear and protective clothing must be used under these circumstances. High temperature implies all equipment with a temperature exceeding 60°C (165°F). It should be noted that the hazard from high temperature can extend beyond the immediate area of the test.

6. HIGH PRESSURE COMPRESSED GAS

High pressure compressed gas is potentially dangerous. Operating instructions must be strictly adhered to. No gas connection should be released unless the gas supply has been disconnected, and the system pressure and any stored pressure, such as in hydraulic accumulators, have been reduced to zero.

7. HIGH PRESSURE HYDRAULIC FLUID

Do not disconnect any hydraulic coupling without first shutting down the hydraulic pumping system and checking that stored pressure has discharged to zero.

OPERATING INSTRUCTIONS
INSTRON UNIVERSAL TESTING INSTRUMENTS
TABLE MODELS 4201 and 4202

TABLE OF CONTENTS

Chapter	Page
1.0 INTRODUCTION	1-1
2.0 SPECIFICATIONS	2-1
3.0 SYSTEM DESCRIPTION	
3.1 General Characteristics	3-1
3.2 Model Differences	3-3
3.3 Loading Frame	3-3
3.3.1 Structural Design	3-3
3.3.2 Crosshead Drive - Mechanical	3-3
3.3.3 System Power and Electrical Interconnections	3-3
3.3.4 Crosshead Positional Control	3-3
3.4 Load Weighing System	3-4
3.4.1 Load Cells	3-4
3.4.2 Load Sensor Conditioner	3-4
3.5 Control Console	3-5
3.5.1 Basic Components	3-6
3.5.2 Optional Components	3-6
3.6 Optional Readout and Control Accessories	3-7
3.6.1 Strip Chart Recorder	3-7
3.6.2 Instron X-Y Recorder	3-7
3.6.3 Printer	3-8
3.6.4 Microcon II Data Processor	3-8
3.6.5 Programmable Computer	3-9
4.0 INSTALLATION	
4.1 Unpacking	4-1
4.2 Transporting	4-1
4.3 Initial Installation	4-1
4.3.1 Preliminary Considerations	4-1
4.3.2 Leveling of Loading Frame	4-1
4.3.3 Interconnection of Units	4-1
4.3.4 Power Requirements	4-4
4.3.5 Nonstandard Main Power	4-4
4.3.6 Frame to Console Power Cabling	4-5
4.3.7 Main Power Connection	4-5
5.0 DESCRIPTION OF SYSTEM COMPONENTS	
5.1 Loading Frame	5-1
5.1.1 Identification of Components	5-1
5.1.2 Connector Panel	5-4
5.1.3 Power Amplifier Drawer	5-6
5.2 Control Console	5-6
5.2.1 Crosshead Control Panel	5-6
5.2.2 Basic and Optional Panels	5-7

TABLE OF CONTENTS
(continued)

Chapter	Page
5.2.2.1 Basic Panel	5-8
5.2.2.2 Display Panel	5-8
5.2.2.3 Limits Panel	5-8
5.2.2.4 Recorder Panel	5-8
5.2.3 Connector Panel	5-8
5.2.4 Console Components	5-9
5.2.5 Console Motherboard	5-10
5.3 Load Cells	5-10
5.3.1 General Characteristics	5-10
5.3.2 Series 4200 Load Cells	5-11
5.3.3 Load Cell Adapters	5-13
5.3.4 Tension Load Cells - Low Capacity	5-13
6.0 PREPARING FOR OPERATION	
6.1 Preliminary Considerations	6-1
6.2 Function of Controls and Indicators	6-2
6.2.1 Basic Panel	6-2
6.2.2 Display Panel	6-7
6.2.3 Limits Panel	6-9
6.2.4 Recorder Panel	6-10
6.3 Data Storage	6-11
6.3.1 Nonvolatile Memory	6-11
6.3.2 System Reset	6-11
6.3.3 Volatile Memory	6-11
6.4 Resident Test Program Overview	6-13
6.5 Self Test Routine	6-14
6.5.1 Self Test - Part 1	6-14
6.5.2 Self Test - Part 2	6-14
6.5.3 Self Test Result - No Failures	6-14
6.5.4 Self Test Result - Failures	6-15
6.5.5 Self Test Result Display	6-15
6.6 Selecting a Load Cell	6-17
6.7 Installing a Load Cell	6-17
6.8 Installation of Grips and Fixtures for Tension and Compression Testing	6-18
6.8.1 Selecting Grips and Fixtures	6-18
6.8.2 Installing Grips for Tension Testing	6-18
6.8.3 Installing Fixtures for Compression Testing	6-19
6.9 Selecting Operating Units	6-19
6.9.1 Switching Units	6-19
6.9.2 Operating Units for Self Identified Load Cells and Loading Frames	6-20
6.9.3 Operating Units for Non-Self Identified Load Cells and Load Frames	6-21
6.9.4 Area	6-21
6.9.5 Energy Units	6-21
6.10 Connecting Accessories	6-21
6.11 Setting Preload Levers	6-22

TABLE OF CONTENTS
(continued)

Chapter	Page
7.0 OPERATING A BASIC SYSTEM	
7.1 Operating Considerations	7-1
7.2 Turn Instrument On: Warm-up Period	7-1
7.3 Self Test Routine at Power Up	7-1
7.4 System Reset at Initial Power Up	7-2
7.5 Calibration	7-3
7.5.1 Overview	7-3
7.5.2 Electrical Calibration of Self Identifying Load Cells	7-3
7.5.3 Mechanical Calibration of Self Identifying Load Cells	7-3
7.5.4 Electrical Calibration of Non-Self Identifying Load Cells	7-4
7.5.5 Mechanical Calibration of Non-Self Identifying Load Cells	7-4
7.6 Install Grips and Fixtures: Balance Load Weighing System	7-5
7.7 Calibration and Balance Errors	7-6
7.8 Pretest Setup Procedures	7-7
7.8.1 Establish Gage Length	7-7
7.8.2 Setting Crosshead Travel Limit Stops	7-7
7.8.3 Set Crosshead Speed	7-8
7.8.4 Area Compensation	7-8
7.8.5 Install Specimen for Basic Tension or Compression Test	7-10
7.8.6 Set Testing Area	7-10
7.8.7 Running Tests on Basic System	7-11
7.8.8 Listing of Pretest Procedures for a Basic System	7-12
8.0 OPERATING AN EXPANDED SYSTEM	
8.1 Introduction	8-1
8.2 Recorder Panel Option	8-2
8.3 Strip Chart Recorder	8-2
8.3.1 Description	8-2
8.3.2 Installation	8-2
8.3.3 Operation	8-2
8.3.3.1 Pen Scaling for Load Signal	8-2
8.3.3.2 Checking Pen Calibration (Optional)	8-3
8.3.3.3 Chart Time Drive Mode	8-4
8.3.3.4 Chart Proportional Drive Mode	8-4
8.3.4 Operating Notes - Strip Chart Recorder	8-4
8.4 X-Y Recorder	8-5
8.4.1 Description	8-5
8.4.2 Installation	8-5
8.4.3 Operation	8-5
8.4.3.1 Pen Scaling for Load Signal	8-5
8.4.3.2 Checking Y-Axis Calibration (Optional)	8-6
8.4.3.3 X-Axis Position Drive Mode	8-6
8.4.3.4 X-Axis Time Drive Mode	8-6

TABLE OF CONTENTS
(continued)

Chapter	Page
8.4.3.5 X-Axis Strain Drive Mode	8-6
8.4.3.6 Checking X-Axis Calibration (Optional)	8-7
8.4.4 Operating Notes - X-Y Recorder	8-8
8.5 Auxiliary Output Jacks	8-8
8.6 Display Panel	8-9
8.6.1 Description	8-9
8.6.2 Operation	8-9
8.7 Limits Panel	8-10
8.7.1 Description	8-10
8.7.2 Operation	8-10
8.8 Printer	8-12
8.8.1 Description	8-12
8.8.2 Installation	8-12
8.8.3 Operation	8-13
8.8.4 Printout Format	8-13
8.8.5 Printer Units	8-13
8.9 Preset Points	8-15
8.9.1 Description	8-15
8.9.2 Operation	8-15
8.10 Energy	8-16
8.10.1 Description	8-16
8.10.2 Operation	8-16
8.11 Strain Measurement	8-16
8.11.1 Introduction	8-16
8.11.2 Strain Operating Mode	8-17
8.12 Strain Gage Extensometers	8-18
8.12.1 Overview	8-18
8.12.2 Electrical Calibration of Self Identifying Strain Gage Extensometers	8-18
8.12.3 Mechanical Calibration of Strain Gage Extensometers	8-19
8.12.4 Strain Gage Extensometers - Operational Notes	8-20
8.13 Model XL Extensometer	8-20
8.13.1 Introduction	8-20
8.13.2 Pipping Operation	8-21
8.13.3 Calibration of Model XL for Strain Measurement	8-21
8.14 Microcon II Data Processor - Load and Strain Calibration	8-22
8.14.1 Introduction	8-22
8.14.2 Calibration - Overview	8-22
8.14.3 Electrical Calibration of Load Channel for a Self Identified Load Cell	8-23
8.14.4 Mechanical Calibration of Load Channel for a Self Identified Load Cell	8-24
8.14.5 Electrical Calibration of Load Channel for a Non-Self Identified Load Cell	8-24
8.14.6 Mechanical Calibration of Load Channel for a Non-Self Identified Load Cell	8-25
8.14.7 Electrical Calibration of Strain Channel for a Self Identified Extensometer	8-25

TABLE OF CONTENTS
(continued)

Chapter	Page
8.14.8 Mechanical Calibration of Strain Channel for All Extensometers	8-26
8.14.9 Microcon II - Operational Notes	8-26
8.15 Pip Control	8-27
8.16 Incremental Extensometer	8-28
9.0 MATERIALS TESTING WORK SHEET	9-1
APPENDIX A INTRODUCTION TO TESTING	
A.1 General	A-1
A.2 Applications of a 4200 Series Instrument	A-1
A.3 Load Requirements	A-2
A.4 Selection of Grips	A-2
A.5 Establishing Gage Length	A-3
A.6 Selection of Testing Speed	A-3
A.7 Strain Rate	A-4
A.8 Area Compensation	A-4
A.8.1 Description	A-4
A.8.2 Determining Stress Range	A-5
A.8.3 Limitations Due To Load Cell Capacity	A-5
A.9 Chart Magnification	A-6
APPENDIX B GLOSSARY OF MECHANICAL PROPERTIES AND TESTS FOR MATERIALS TESTING APPLICATIONS	B-1
APPENDIX C GRIPS AND FIXTURES	C-1

OPERATING INSTRUCTIONS
INSTRON UNIVERSAL TESTING INSTRUMENTS
TABLE MODELS 4201 and 4202

LIST OF ILLUSTRATIONS

Figure No.		Page
1-1	Instron Model 4201 Universal Testing Instrument	xiv
3-1	Functional Block Diagram of Model 4201/4202 Testing System	3-2
3-2	Strip Chart Recorder	3-7
3-3	Instron X-Y Recorder	3-8
3-4	Printer	3-8
3-5	Microcon II	3-9
3-6	HP-85 Computer	3-9
4-1	Cabling Installation for Model 4201 and 4202	4-2
4-2	Control Console Internal Connectors	4-3
4-3	Changing Input Line Voltage Adapter	4-5
5-1	Model 4201 and 4202 Loading Frames Components and Controls	5-3
5-2	Loading Frame Connector Panel	5-4
5-3	Power Amplifier Drawer	5-5
5-4	Crosshead Control Panel	5-7
5-5	Control Console - Basic and Optional Panels	5-7
5-6	Connector Panel - Control Console	5-9
5-7	Control Console Components	5-9
5-8	Control Console Motherboard	5-10
5-9	Tension Load Cell - 4200 Series	5-11
5-10	Compression Load Cell - 4200 Series	5-11
5-11	Tension Load Cell - 50 N and 500 N Detailed Assembly	5-12
5-12	Tension Load Cell - 5 kN and 10 kN Detailed Assembly	5-12
5-13	Compression Load Cells Detailed Assembly	5-13
5-14	Tension Couplings - 4200 Series Cells	5-14
5-15	Compression Anvils - 4200 Series Cells	5-14
6-1	A 4200 Series Fully Expanded Console	6-1
6-2	Basic Panel	6-2
6-3	Display Panel	6-7
6-4	Limits Panel	6-9
6-5	Recorder Panel	6-10
6-6	Console Board Numbers Assigned to Basic Panel Display for Self Test Result	6-15
6-7	Coding of Display Digits for Self Test Result	6-16
6-8	Characters Displayed in Self Test Result	6-16
6-9	Installing a Load Cell	6-17
6-10	Installing Grips	6-18
6-11	Location of Operating Units Selection Switch	6-19

LIST OF ILLUSTRATIONS
(continued)

Figure No.		Page
6-12	Installing Accessory Cables in Console	6-22
6-13	Setting Crosshead Preload Levers	6-22
7-1	Balancing Load System	7-5
7-2	Setting Crosshead Travel Limit Stops	7-7
7-3	Installing Specimen for Tension Testing	7-10
7-4	Starting a Tension Test	7-11
8-1	Baud Rate and Strain Units Switch, S5	8-12
8-2	Printout with Strain as Independent Variable	8-14
8-3	Printout with Extension as Independent Variable	8-14
8-4	Typical Test Curve with Preset Points	8-15
8-5	Strain Gage Extensometer Mounted on Specimen	8-19
8-6	Model XL Extensometer Mounted on a Model 4201 Loading Frame	8-21
8-7	Incremental Extensometer Mounted on Specimen	8-28
A-1	Typical Load-Displacement Chart Showing Magnification Ratio	A-7
C-1	Screw Action Grips	C-1
C-2	Wedge Action Grips	C-2
C-3	Pneumatic Action Grips	C-2
C-4	Pneumatic Foot Switch	C-3
C-5	Portable Air Compressor	C-3
C-6	Pneumatic Cord and Yarn Grips	C-4
C-7	Fiber Clamps	C-4
C-8	Elastomeric Grips	C-5
C-9	Capstan Grips	C-5
C-10	Flexure Fixture	C-5
C-11	Flexure Test Fixture - 3-Point	C-6
C-12	O-Ring Test Fixture	C-6
C-13	Environmental Chamber	C-6
C-14	Food Testing Fixtures	C-7
C-15	Peel Testing Fixture	C-7
C-16	Adhesive Bond Test Test Grip	C-7
C-17	Wood Tensile Fixture	C-7
C-18	Short Beam Shear Fixture for Flat Specimens	C-7

OPERATING INSTRUCTIONS
INSTRON UNIVERSAL TESTING INSTRUMENTS
TABLE MODELS 4201 and 4202

LIST OF TABLES

Table No.		Page
4-1	Recorder/Extensometer Option Cables	4-3
4-2	Line Voltage Selection	4-4
5-1	Dedicated 4200 Series Load Cells	5-11
5-2	Tension Coupling Assemblies	5-14
5-3	Compression Anvil Assemblies	5-14
5-4	Low Capacity Load Cells	5-14
6-1	Function of Basic Panel Controls and Indicators	6-2
6-2	Function of Display Panel Controls and Indicators	6-8
6-3	Function of Limits Panel Controls and Indicators	6-9
6-4	Function of Recorder Panel Controls and Indicators	6-10
6-5	Variables and Functions in Nonvolatile Memory	6-12
6-6	Control Console Boards	6-15
6-7	Characters Possible in Self Test Result for Each Digit of Basic Panel Display	6-16
6-8	Operating Units for Self Identified Load Cells and Frames	6-20
7-1	Low Capacity Load Cells Calibration Data	7-4
7-2	Transducer Calibration or Balance Errors	7-6
8-1	Optional Components and Peripheral Equipment	8-1
8-2	Calibration Signal 4200 Series Load Cells	8-3
8-3	Console Panel Connector J2 Jacks X-Axis Outputs	8-9
8-4	Strain Units Printout	8-14
8-5	Energy Units Printout	8-14
8-6	Calibration Signal 4200 Series Load Cells	8-23
A-1	Gripping Techniques	A-3
A-2	Typical Testing Speed Ranges for Materials	A-4

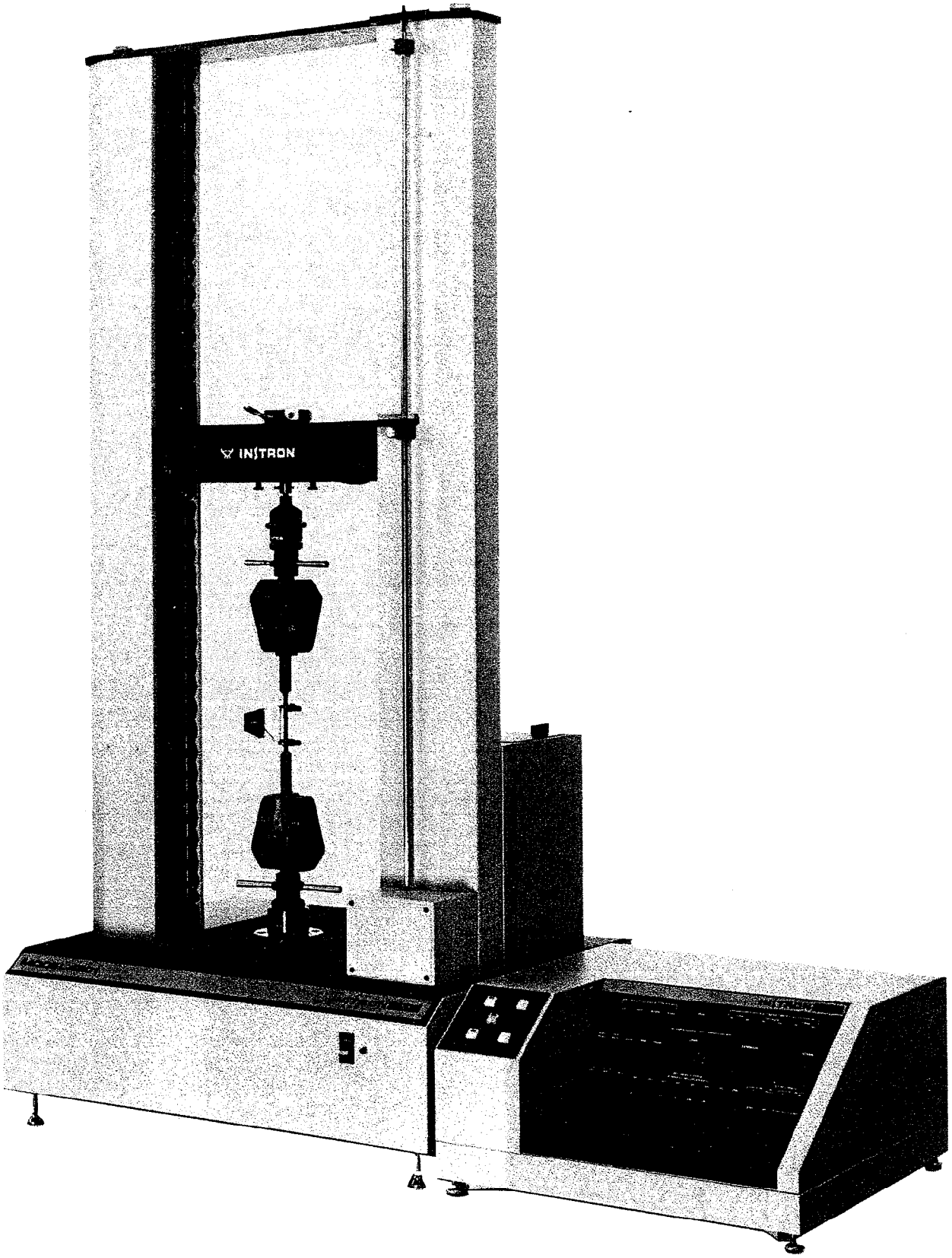

Figure 1-1. Instron Model 4201 Universal Testing Instrument

1.0 INTRODUCTION

Instron universal testing instruments are highly reliable precision systems for evaluating the mechanical properties of materials. The advantages of these systems, as accurate and versatile tools, make them equally adaptable to research and development requirements as to the repetitive testing applications of production quality control.

The Instron 4200 series of universal testing instruments are electromechanical devices employing the latest technology in order to provide the optimum in materials testing systems. This manual describes the Model 4201 and Model 4202 of the series, which are both table mounted units consisting of a loading frame and control console as separate assemblies.

The Model 4201 frame has a loading range of up to 5 kN (1125 lb, 500 kg), and the Model 4202 frame has a loading range of up to 10 kN (2250 lb, 1000 kg). These frames are designed for testing materials in either tension or compression, and will accept the full line of Instron grips, extensometers and fixtures that are included within their loading capabilities. A complete range of load cells, designed specifically for use with these frames, ensure the accuracy and repeatability of test results.

The microprocessor-based control console, which is standard for use with the 4200 series of testing instruments, includes a basic panel and up to three optional front panel sections. The controls on these panels offer the operator complete communication with the system through a numeric keypad, pushbutton selection switches and LCD displays. Optional interfacing is available for an X-Y or strip chart recorder, extensometer signal conditioners, the Instron Microcon II data analyzer and a programmable computer. These control and readout options may be specified initially with the testing instrument or added later to extend its capabilities.

The purpose of this manual is to provide the user with a basic understanding of the testing instrument and its principles of operation. It contains the operating instructions, specifications, component and control descriptions, installation procedures and an introduction to materials testing. A glossary of terms related to materials testing is also included.

Other manuals provide maintenance instructions, reference drawings and parts lists for the system.

For detailed information about the complete line of Instron testing equipment, for consultation on test programs, or for inquiries on the operation or maintenance of the equipment, contact your local Instron Regional Sales and Service center listed on the back cover of this manual.

2.0 SPECIFICATIONS

SPECIFICATIONS	MODEL 4201	MODEL 4202
Capacity	5 kN (1125 lbs.)	10 kN (2250 lbs.)
Force Rating (Tension and compression below moving crosshead)	5 kN up to 500mm/min. (20 in./min.)	10 kN up to 250mm/min. (10 in./min.) 5 kN up to 500mm/min. (20 in./min.)
Load Range (using inter-changeable 2512 Series cells)	0.1N to 5 kN (10g to 1125 lbs.)	0.1N to 10 kN (10g to 2250 lbs.)
Load Weighing System accuracy at digital readout accessory or analog output	± 1% of reading to 1/50 of load cell capacity. ± 1 count on the display.	
Strain measuring system accuracy at digital readout accessory or analog output	± 0.6% of reading ± transducer linearity. ± 1 count on the display.	
Position measurement accuracy (no load) Position measurement repeatability (no load)	± 0.1mm (0.004 in.) or ± 0.15% of displacement ± 0.05mm (0.002 in.)	
Crosshead speed range Crosshead speed accuracy	0.5 to 500mm/min. (0.02 to 20 ipm) ± 0.2% over 100mm (4 in.)	
Return Speed	1000mm/min. (40 in./min.)	500mm/min. (20 in./min.)
Crosshead Alignment	0.2mm/100mm, 0.4mm throughout full travel (0.008 in./4 in., 0.016 in., throughout full travel) TIR relative to vertical axis (no load).	
Machine stiffness	28 kN/mm (160,000 lbs./in.)	
Crosshead Travel (with screw covers and base adapter excluding optional grips and fixtures)	1100mm (46.1 in.)	
Testing (sample) space Lateral Front to back	 412mm (16.2 in.) unlimited	
Frame Dimensions Height Width Depth Weight	 1660mm (65.4 in.) 770mm (30.3 in.) 620mm (24.4 in.) (requires 100mm (3.93 in.) clearance behind unit) 163 kg (359.4 lbs.)	
Console Dimensions Height Width Depth Weight	 285mm (11.2 in.) 540mm (21.3 in.) 535mm (21.1 in.) (requires 75mm (3 in.) clearance behind unit) 28 kg (61.7 lbs.)	
Power requirements Voltage Frequency Power	 100/120/220/240 volts ± 10%, single phase 47/63 Hz 1440 VA max.	
Environmental Requirements Operating Temperature Storage Temperature Humidity	 10° to 30°C (can be field adjusted for use up to 38°C) -30°C to + 50°C 10% to 90% (noncondensing)	

The models 4201, 4202 meet ASTM E4. They also meet ASTM E83 Class B1 and Class C with certain Instron extensometers.

Instron Corporation reserves the right to change specifications without notice. The instrument's performance specifications above are developed in accordance with Instron's standard procedures.

3.0 SYSTEM DESCRIPTION

3.1 GENERAL CHARACTERISTICS

An Instron 4200 series universal testing instrument is comprised of two major systems: a crosshead drive and control system, which applies tensile or compressive loading to a specimen; and a highly sensitive load weighing system, which measures the loading of a specimen. Figure 3-1 is a functional block diagram showing the interfacing of these two systems, and the signal flow within the overall instrument.

The basic operation of the instrument consists of selecting a load cell for a particular testing application, mounting the load cell in the moving crosshead within the loading frame, then setting a specimen in position so that an applied load can be measured. The specimen is held by grips for tension testing, or is table-mounted for compression testing. If strain measurement is required, an optional strain gage or elastomeric extensometer is attached to the specimen. Tensile or compressive forces are applied when the moving crosshead is operated by two vertical leadscrews.

During a test, results occur as tracked (instantaneous) values of load, extension and strain or, after a test, as stored break and peak values of these parameters. Total energy and load and energy values at preset points are also available as stored parameters. Several choices of analog and digital type devices are obtainable as options for viewing and recording test results.

The console for the testing instrument provides control, data acquisition and data readout functions for the loading frame. All operations are directed by a crystal controlled, microprocessor-based central processing unit (CPU). The crosshead control network in the console allows programmable crosshead speeds and provides digital control of the crosshead position. The operating mode of the console data entry and readout functions can be in English, metric or SI units, as selected by a switch. A status indicator on the basic panel shows the system of units selected.

The action of the moving crosshead during a test - stop, return, cycle - may be controlled manually by pushbutton switches or automatically by the functions provided by an optional Limits Panel. These functions may be based on the applied load, extension or strain, or to a specimen break detection.

A CPU controlled sensor conditioner board in the load weighing system allows calibration and balance procedures to be performed automatically after being initiated by the operator. The sensor conditioner provides both an unranged analog and an automatically ranged digital load signal output suitable for several types of optional readout devices.

Optional readouts for test results include: a Display Panel for viewing load, extension and strain measurements (strain measurements require an additional one or two strain sensor conditioner boards); a Recorder Panel and recorder board for interfacing an X-Y or strip chart recorder, and an 80 character wide printer. An optional interface for the Instron Microcon II provides a user with the capability of obtaining complete test results through fully automated processing.

The capability is provided in the console for optionally adding an

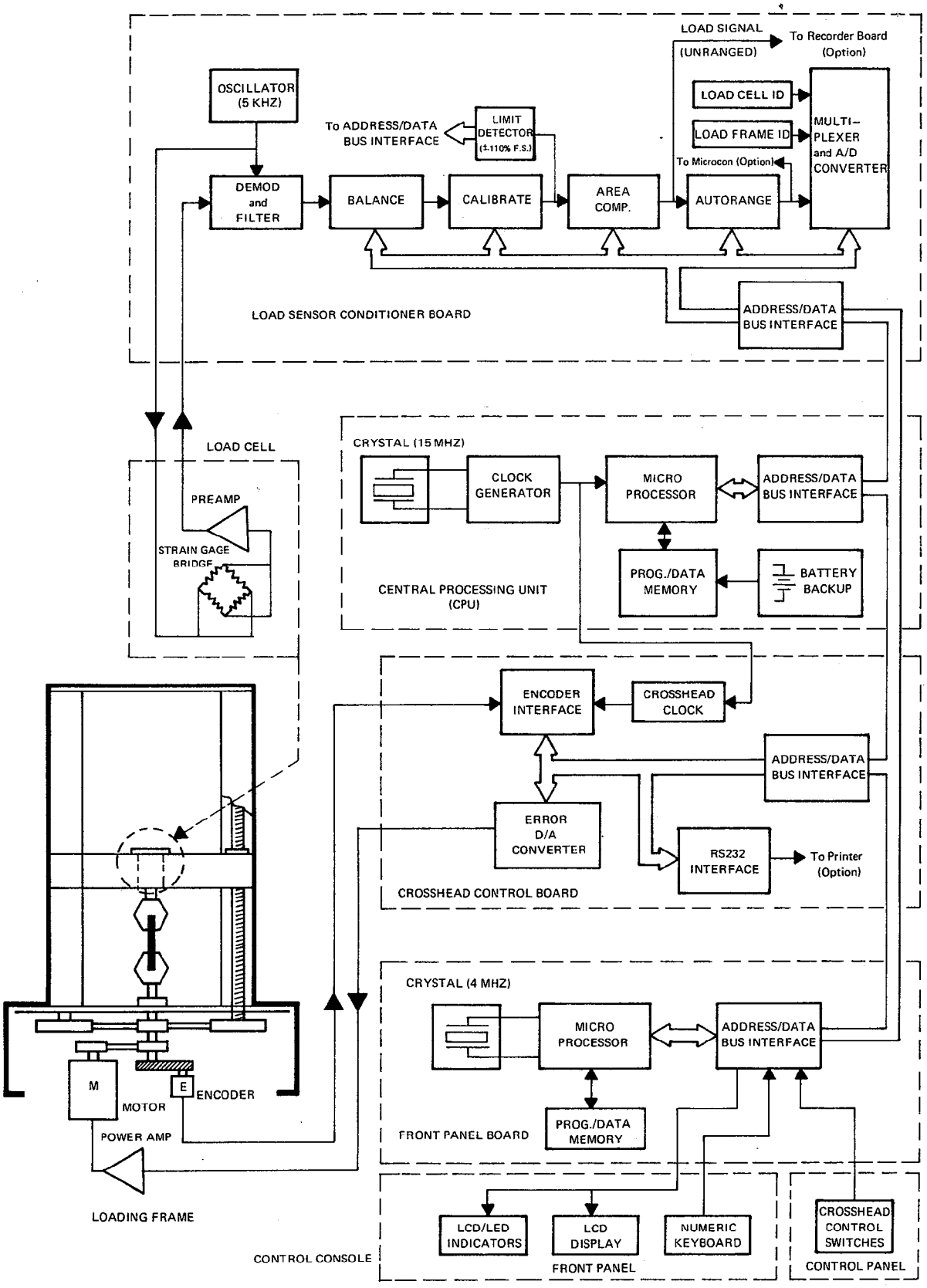

Figure 3-1. Functional Block Diagram of Model 4201/4202 Basic Testing System

IEEE-488 interface. This is a General Purpose Instrument Bus (GPIB) which allows remote supervisory control of test procedures through a programmable computer.

3.2 MODEL DIFFERENCES

The Model 4201 and 4202 testing instruments use a standard control console, common to each model, and the loading frame has the same basic structure. However, several components differ in the frames (such as base grip adapter, drive belt pulley and shaft encoder gear) due to the maximum load/speed capability of each type of instrument. An identification resistor, unique to each type of loading frame, allows the control console to automatically set the maximum testing and return crosshead speeds to the design limit of each system.

3.3 LOADING FRAME

3.3.1 Structural Design

The basic design of the loading frames for the Models 4201 and 4202 is a loading system consisting of two vertical leadscrews, a moving crosshead and a base beam which is the lower bearing carrier for the leadscrews. All testing, tension and compression, is done between the moving crosshead and the base beam. This type of design adds to the stiffness of the system.

Additional supporting structure includes a baseplate, two columns which enclose the leadscrews, and a fixed crosshead which is the upper bearing carrier for the leadscrews. Guidance rods, mounted in each column between the base beam and the fixed crosshead, maintain alignment of the moving crosshead as it traverses within the frame. The entire assembly is installed on a formed base which encloses the mechanical drive train for the system.

3.3.2 Crosshead Drive - Mechanical

A permanent magnet type d.c. motor provides the mechanical drive for the moving crosshead. This motor, located on top of the base behind the right-hand column, is coupled through a V-belt and timing belt to the leadscrew drive pulleys. The use of a timing belt between the pulleys provides synchronism of the driving force to the leadscrews and ensures vertical alignment of the moving crosshead. Manual positioning of the moving crosshead is possible, when the system power is off, by turning a knob located on top of the motor shaft.

3.3.3 System Power and Electrical Interconnections

A Power Amplifier Drawer, located in the rear base of the loading frame, contains the power controller for the crosshead drive motor and the frame-console interface (frame board). The main power to the system is applied at the panel (connector panel) of this drawer, which also contains system fuses and all other cabling connections to the frame.

Main power is applied through the main power switch on the front of the frame to a transformer in the base of the frame. From this transformer, 120 VAC is supplied to an AC outlet on the connector panel which accepts the power cable to the control console. In this manner, complete system power is controlled by the main power switch.

3.3.4 Crosshead Positional Control

The control of the moving crosshead is developed from a commanded testing speed and direction, programmed at the console, which begins to generate a crosshead positional error signal when the test starts.

The control loop for the motor is closed by the use of an incremental encoder which is mounted on an intermediate shaft in the drive train for the moving crosshead. This optical device provides positional feedback information by generating one pulse for each 0.1 micrometer (0.000003937 in.) displacement of the crosshead. This signal is applied to the crosshead control board in the console, subtracted from the command and the difference expressed as an analog error signal.

The error signal is applied to the power controller in the loading frame. This device uses silicon controlled rectifiers (SCR's) to proportionally control the duration and sign (±) of current (power) pulses supplied to the crosshead drive motor. The motor drives the crosshead, at the preset speed and test direction, minimizing the error signal.

3.4 LOAD WEIGHING SYSTEM

3.4.1 Load Cells

A number of load cells are usable in the load weighing system of the Models 4201 and 4202. The complete line of existing Instron tension or compression load cells, either electrically or mechanically calibrated and within the loading range of the system, are readily adaptable to these instruments.

A series of eight load cells, four each for tension and compression testing, were designed specifically (dedicated) for use with the 4200 series instruments. The features of these cells include a self-identifying resistor, unique to each cell, and an internal preamplifier. The resistor makes possible the automatic recognition of the cell by a microprocessor, which sets load range limits to safeguard the cell. The preamplifier provides a noise-free high level signal from the load cell.

Six of these dedicated cells, easily interchangeable, provide full accuracy over the following three ranges (for both models):

1-50 N (0.2-10 lb, 0.1-5 kg)
10-500 N (2-100 lb, 1-50 kg)
0.1-5 kN (20-1000 lb, 10-500 kg)

An additional two cells, for use on the Model 4202, cover the range of 0.2-10 kN (40-2000 lb, 20-1000 kg) in tension and compression.

All load cells, for either tension or compression testing, are mounted on the moving crosshead. When tension testing, the upper specimen grip is pinned to an adapter coupling which is also pinned to the load cell spindle. The design of this double pinned connection with the pins 90° apart, allows the grip to be self-aligning. A series of three adapters cover the complete range of Instron grips that are usable within the capacity of the instruments. The lower grip is rigidly mounted in a baseplate adapter.

When compression testing, an anvil is pinned to the load cell spindle and a table is mounted on the center of the baseplate. The faces of the anvil and table are held parallel by a locknut, which also removes backlash from the system. Anvils are available in several diameters for both 50 N (10 lb, 5 kg) and 10 kN (2000 lb, 1000 kg) maximum loading capacities.

3.4.2 Load Sensor Conditioner

In addition to the load cell, the load weighing system includes a sensor conditioner board which is mounted in the control console. This device processes the signal from the load cell and generates a

calibrated unranged analog output for external readout devices, and an automatically ranged digital output for the LOAD display on the optional Display Panel.

As shown in Figure 3-1, a stabilized oscillator on the conditioner board provides an AC (5 kHz) excitation signal to the strain gage bridge in the load cell. An applied load to the cell causes a proportional change in the resistance of the strain gages and an unbalance in the bridge. The resulting signal is internally preamplified by the 4200 series of dedicated load cells (Section 3.4.1). Other Instron load cells must have an external preamplifier added when adapted to the system. The preamplified load signal is demodulated and filtered by the sensor conditioner.

The functions of balancing, calibrating, and area compensating are initiated and inputted by an operator prior to starting a test. The demodulated load signal is conditioned by these functions during a test, under microprocessor control.

The calibrated load signal is continuously monitored and normally if an overload occurs, exceeding the range of 102% to 115% of load cell capacity, the test will be automatically stopped. On the front panel, the LOAD status indicator will flash and the optional LCD display will show "EEEE". When this occurs, the crosshead can be moved only in a direction that will decrease the load in order to clear the condition.

The sensitivity of the calibrated load signal is adjusted in accordance with any area compensation, as set before starting a test. This feature allows a stress relationship to be determined for a group of specimens by simply compensating for any difference in cross-sectional area between each specimen. After area compensation, the load signal is available as an unranged signal to an optional recorder interface board, and is applied to an automatic ranging digital circuit.

The ranging circuit automatically attenuates the load signal through a precision (±0.01%) network over ranges of X1, X2, X5 and X10. These ranges are 100%, 50%, 20% and 10% of full scale, respectively. That is, the X1 range provides full scale output (10 volts) at 100% of load cell full scale capacity, and the X10 range provides full scale output at 10% of load cell full scale capacity. The ranged load signal is available for application to the following optional readout devices:

Load Display (Display Panel)
Printer (RS-232 Interface)
Microcon II Data Processor
Programmable Computer (IEEE-488 Bus)

Also contained on the sensor conditioner board are the load cell and loading frame identification (ID) sensor amplifiers. These devices convert the resistance of the ID resistor in each dedicated cell and 4200 series loading frame to a voltage, which is then converted to a digital ID number and interfaced to the CPU. With the installed load cell identified by this means, automatic calibration can be performed after being initiated by an operator. With the loading frame identified, the system automatically sets the gain of the crosshead control loop and the allowable crosshead testing and return speeds.

3.5 CONTROL CONSOLE

The Control Console for the 4200 series of testing instruments provides the interface between operator, loading frame and peripheral devices (strain extensometer, readout, test control, and data proces-

sing) by the functions included on a control panel, basic panel and three optional panels. A description of these panels is contained in Chapter 5, and the function of controls and indicators is defined in Chapter 6.

3.5.1 Basic Components

The assemblies within the control console consist of electronic circuit boards which are the functional elements of the testing system. The circuit boards included in a basic system are shown in block diagram form in Figure 3-1, and are briefly described below.

Front Panel Board - provides interfacing between the Central Processing Unit (CPU) and the front panel components. The microprocessor based functions on this board control the panel indicators and the operation of the numeric keyboard.

Crosshead Control Board - provides interfacing between the loading frame and console for the moving crosshead control signals. The encoder output signal is conditioned and the crosshead position (extension) determined by the functions on this board. An error signal is developed when the extension is compared with the commanded crosshead speed and fed back to the crosshead drive system.

Central Processing Unit (CPU) - a single board computer which provides the main processing functions for the console. A digital bus originating on this board allows communication with and control of all other operations, including optional interfacing for peripheral devices. Battery backup on this board allows nonvolatile parameter storage, as described in Chapter 6.

Load Sensor Conditioner - provides interfacing between a load transducer (load cell) and the console. Functions on this board supply excitation to a load cell, process its output signal, and provide calibrated analog and digital load weighing information to the console and readout devices.

3.5.2 Optional Components

Additional circuit boards are available as options to provide interfacing with peripheral devices and expand the capability of the system. These include a Recorder Board, Strain Sensor Conditioner Board (three types), a Microcon II Interface Board and an IEEE-488 Interface Board.

All basic and optional circuit boards, except the Front Panel Boards, mount on a Motherboard as described in Chapter 5. As all interconnections within the system are made at this board, except those to optional front panels, the addition of options at anytime is convenient and easily accomplished. Installation procedures are included with each device.

Recorder Board - provides interfacing between the control console and analog readout devices. This board is supplied with the Recorder Panel, Catalog No. 2310-817. It processes unranged load and strain signals, developed by basic and optional sensor conditioner boards, and provides manually ranged signals capable of driving optional strip chart and X-Y recorders. Additional outputs from this board include time or proportional strip chart drive and time-/position/strain X-axis drive. An event marker for pipping the load signal and automatic pen lift commands also originate from this board, under processor control.

Strain Sensor Conditioner Board - provides interfacing between strain measuring extensometers and the console. This sensor conditioner board

DN00009238

is available in three different versions: 1) Catalog No. 2210-826 for extensometers using linear variable differential transformers (LVDT), 2) Catalog No. 2210-827 for strain gage type extensometers, and 3) Catalog No. 2210-828 for the Instron extra length (XL) extensometer. The functions of these boards are similar to the load sensor conditioner board described in Section 3.5.1. Both unranged and automatically ranged strain signals are available at various output ports.

Microcon II Interface Board - allows the Instron Microcon II data processor to be used in conjunction with a 4200 series testing system. This board is supplied with both of the Microcon II options described in Section 3.6.4. All necessary signals between the control console and the Microcon II (ranged load and strain data, and crosshead stop and return commands) are buffered through this board to enable full use of the capabilities of the unit.

IEEE-488 Interface Board - allows the 4200 series testing system to be remotely controllable by an external computer, through a General Purpose Instrument Bus (GPIB). This microprocessor based board, Catalog No. 2402-005, interacts directly with the main CPU, thus enabling a supervisory program to control console and loading frame functions.

3.6 OPTIONAL READOUT AND CONTROL ACCESSORIES

3.6.1 Strip Chart Recorder

The Instron Strip Chart Recorder (Figure 3-2), Catalog No. 2310-064, is a single-range, single pen, horizontal bed recorder with a unidirectional chart drive. Selectable chart speeds are calibrated in English or metric units.

The load signal from the 4200 series system is applied to the recorder pen which requires 10 VDC for full scale. This signal has a range of 0-10 VDC, and is automatically ranged to full scale by the 4200 series instrument.

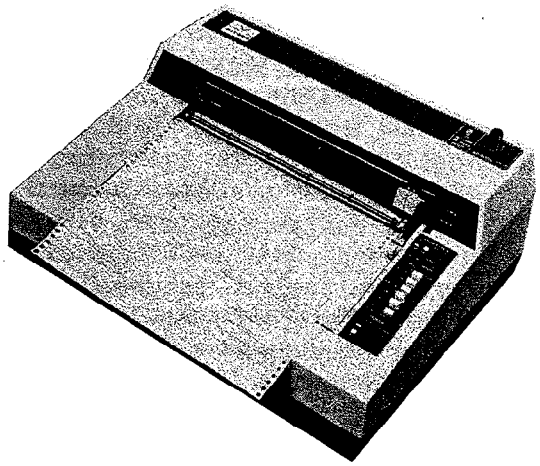

Figure 3-2. Strip Chart Recorder

The chart may be operated in the time drive mode or the proportional drive mode. In the time drive mode, nine chart speeds are selectable in the range of 1.0 to 500 mm/min (0.05 to 20 in/min). In the proportional mode, speed is a function of a pulsed input from the 4200 series system and is proportional to the speed of the moving crosshead.

The Z-fold chart paper used with this recorder is available calibrated in either metric or English units, with a 250 mm (or 10 in.) span and 15 m (or 50 ft) length.

Installation procedures for the recorder are included with the unit and operation with the 4200 system is described in Chapter 8. An Operating Instructions manual is supplied with the chart recorder.

3.6.2 Instron X-Y Recorder

The Instron X-Y Recorder (Figure 3-3), Catalog No. 2310-065, has a horizontal flat bed with a single pen and single-range X and Y axes

which can be calibrated in either English or metric units. The recorder accepts any paper 29 x 42 cm (11 x17 in) or smaller, and has an effective writing area of 25 x 38cm (10 x 15 in).

The input voltage range for both axes of the recorder is 0-10 VDC. On the Y-axis, the input to the pen is the load signal which is automatically ranged to full scale by the 4200 series system. Inputs to the X-axis can be either a time base, a crosshead position signal base, or a strain signal as selected on the optional Recorder Panel. The scale factor for the X-axis input is programmed by the user.

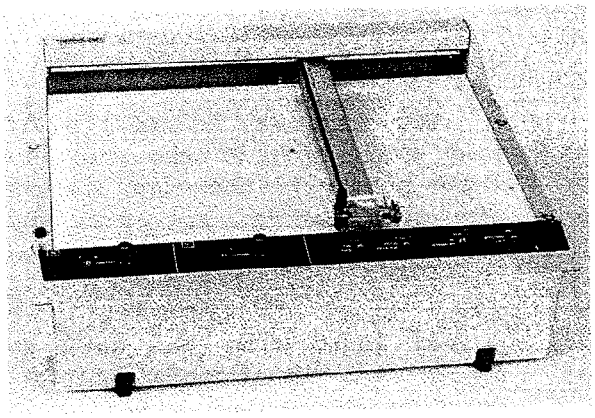

Figure 3-3. Instron X-Y Recorder

Installation procedures for the X-Y recorder are included with the unit and operation with the 4200 system is described in Chapter 8. An Operating Instructions manual is supplied with the recorder.

3.6.3 Printer

The Instron Printer (Figure 3-4), Catalog No. 2350-004, is a 22 cm ($8^1/_2$ in), 80-character wide, free-standing unit. The printer has a high quality dot matrix, impact print head which operates at about 100 characters per second. A tractor drive assembly assures proper feeding of continuous fan fold paper. The printer functions on demand at the end of a test with an output in letters, numbers and special symbols.

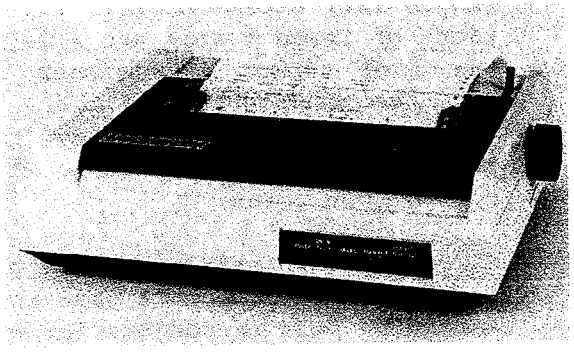

Figure 3-4. Printer

Installation procedures for the printer are included with the unit and operation with the 4200 systems is described in Chapter 8. An Operating Instructions manual is supplied with the printer.

3.6.4 Microcon II Data Processor

The Instron Microcon II (Figure 3-5) is a microprocessor-based instrument designed to increase the accuracy and consistency of data from materials testing systems. This unit simplifies the setup and operation of a test by allowing the user to enter test parameters and select required results by simple keyboard commands.

During a test, the Microcon II can measure and store up to five variables including: load, elongation, stress, strain, and energy occurring at the peak, fail, break and yield (optional) points of a specimen. A digital display allows the monitoring of any of these variables during a test. The user can select operation of the instrument in either English, metric or SI units, which may be changed before

or after a test with automatic number conversion.

Several options are available with the unit, such as ten preset points, statistical analysis, slope and chord modulus measurements, and a cassette which permits tape storage of all test parameters. Test results can be permanently recorded directly on a printer, such as the Instron Printer (Section 3.6.3).



Figure 3-5. Microcon II

The Microcon II desk top unit is available with the cassette option under Catalog No. 4100-080, and without the cassette option under Catalog No. 4100-081. Installation procedures are included with the unit and operation with the 4200 system is described in Chapter 8 of this manual. Operating instruction manuals are supplied with the unit.

3.6.5 Programmable Computer

The IEEE-488 interface option allows supervisory control of a 4200 series test instrument and the recording of test data by an external device. This device can be any computer or programmable calculator with an IEEE-488 compatible port. The external device must be able to transfer program messages to and receive measurement messages and status from the test instrument. Complete programming information is supplied by Instron with the IEEE-488 interface option.

Figure 3-6 shows the HP-85 which is typical of the programmable computers available through Instron. This system is a desk top computer with a built-in video display, tape cassette and printer, plus the necessary plug-in options. With this device the user can compose test programs in BASIC language, or use prepackaged programs, which will control all console and loading frame functions through complete materials testing procedures. Programs can be permanently stored on tape, results displayed and a printout obtained.



Figure 3-6. HP-85 Computer

Installation procedures for the HP-85 Computer, or other system available through Instron, are provided and applications with the 4200 system are detailed in separate manuals. Complete operating and programming instruction manuals are supplied with the computer system.

4.0 INSTALLATION

4.1 UNPACKING

The Instron Model 4201 or 4202 testing instrument is carefully packed for shipment. The loading frame is bolted on a wooden skid and enclosed in a durable cardboard container. (The instrument is crated when shipped outside of U.S.A.)

After removing the containers, use the packing list to inventory all items. Note that some accessories may be packed in with the loading frame or console, or packaged separately. Locate the Return Goods Authorization (RGA) tags included with the units and save for future use if service is required. Retain shipping material until system is satisfactorily installed.

4.2 TRANSPORTING

The loading frame may be transported by using a fork lift, with a 275 kg (600 lb) capacity, under the shipping skid (see CAUTION).

CAUTION

After the skid is removed from the loading frame, do not attempt to transport the frame with a fork lift inserted beneath the base as this could damage the underside.

After removing the shipping skid, use one of the following methods to transport the loading frame:

1. Use a padded forklift carefully inserted under the moving crosshead between the columns. DO NOT use top plate on columns for lifting frame.

2. Use a rope sling under the moving crosshead with a 275 kg (600 lb) capacity.

IMPORTANT NOTE

Four leveling pads (feet) are supplied for the loading frame. After removing the skid, thread a pad into each corner of the base before placing the frame on a table.

4.3 INITIAL INSTALLATION

4.3.1 Preliminary Considerations

The design of the Model 4201 or 4202 testing instrument allows a flexibility in installation layout. The equipment units - loading frame and console - may be mounted side by side on a single table or on separate tables angled for operating efficiency. The units may also be installed in separate rooms with connections made through a wall.

Tables used for the units must have the structural strength required for support: loading frame - 163 kg (360 lb); console - 28 kg (62 lb). Also, the tables should place the units at the proper height for operator access. Support tables, specifically designed for the 4201 and 4202 instruments, are available from Instron.

4.3.2 Leveling of Loading Frame

After the instrument is mounted in its operating position, level the loading frame. Place a bubble level on the base near the center of the two columns. Then adjust the four pads until the frame is level in both the side-to-side and front-to-back directions.

4.3.3 Interconnection of Units

The cabling necessary to interconnect the two basic units of the Model 4201 or 4202 is shown in Figure 4-1. Not shown is other cabling

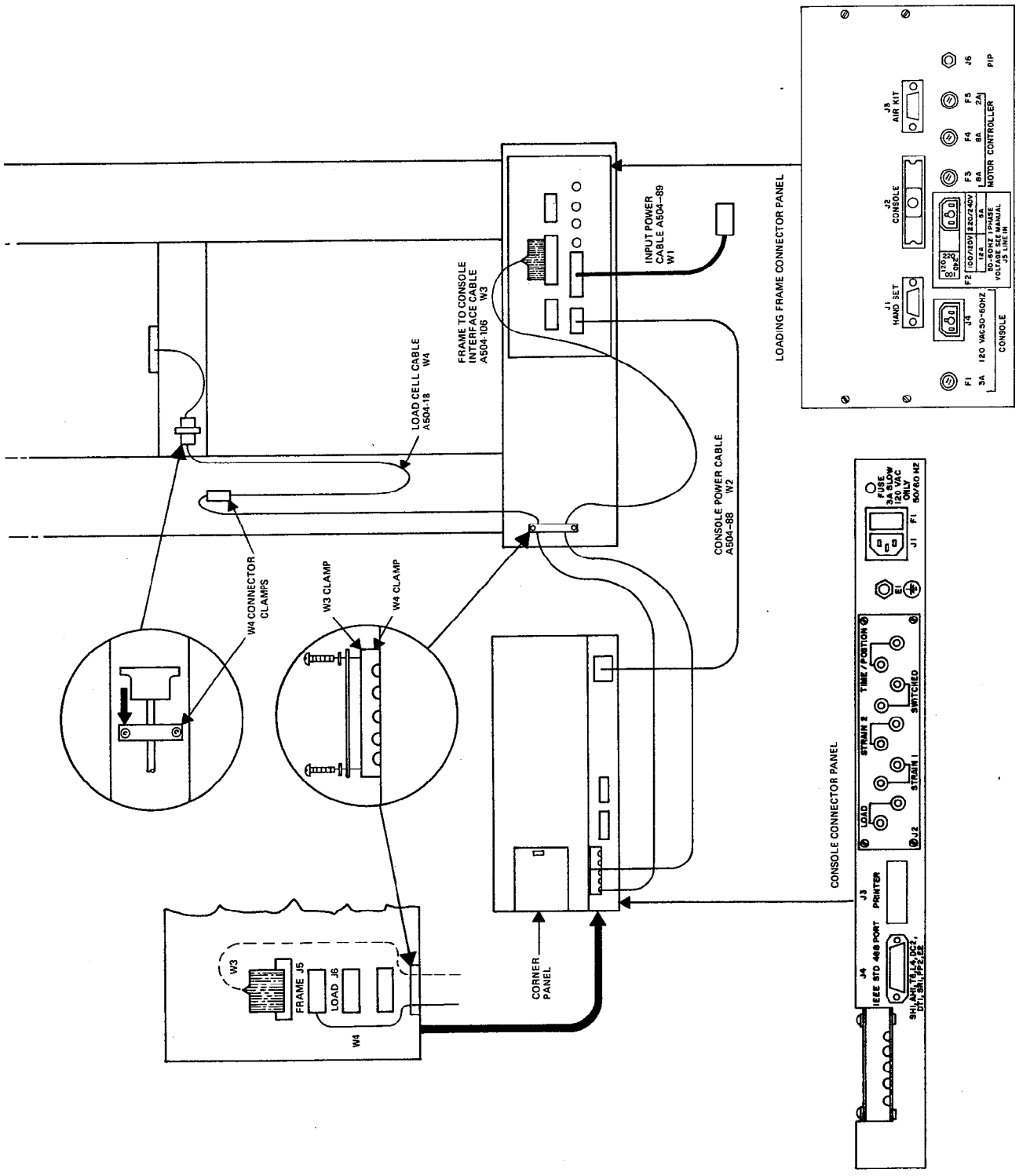

Figure 4-1. Cabling Installation for Model 4201 and 4202 (Rear View)

supplied for optional accessories that may be included with the original equipment.

NOTE

It is recommended that a clear space of at least 1 meter (3 feet) be left behind the instrument to provide service access and to avoid damaging the interconnecting cables.

Install the cabling as follows:

a. Remove corner panel from left rear of console by rotating its latch $^1/_4$-turn and sliding the panel straight back.

b. Remove screws holding the W3/W4 cable clamps on both the console and frame, as shown in Figure 4-1.

c. Plug female end of Load Cell Cable, W4 (A504-18), into LOAD connector (J6) in the console. Feed this cable through the W4 clamps on console and frame.

d. Install male connector of W4 cable into clamp on moving crosshead (see Figure 4-1).

NOTE

Leave as long a trailing loop as possible on the Load Cell cable, W4, between the frame clamp and the moving crosshead clamp, as this cable travels with the moving crosshead and must extend to nearly the full height of the frame.

e. If optional equipment (recorder and strain extensometers) are included with the system, install the cables at this time or later as required (see Section 6.10).

Table 4-1 is a listing of the cable assemblies for optional recorders and strain extensometers that connect internally in the console (see Figure 4-2).

Table 4-1. Recorder/Extensometer Option Cables

Optional Accessory	Cable Assy.	Console Conn.
X-Y Recorder (3 types)	A504-21 A504-87 A504-92	J9 J9 J9
Strip Chart Recorder	A504-20	J9
Strain Gage Extensometer	A504-19 (A504-68 Adapter)	J7 or J8
XL Extens.	A504-19 (A504-67 Adapter)	J8
LVDT Extens.	A504-19	J8

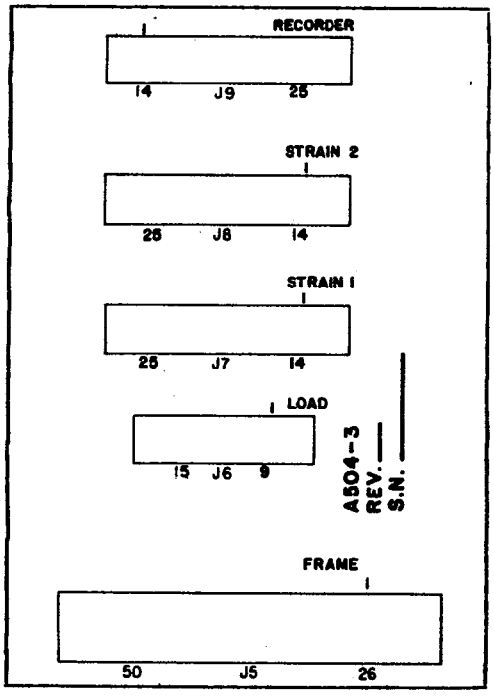

Figure 4-2. Control Console Internal Connectors

f. Connect ribbon-type Frame-to-Console Interface Cable, W3 (A504-106), between connector J5 in console and connector J2 on frame connector panel, as shown in Figure 4-1. Ensure that connectors are fully engaged and clamped in place.

g. Position all cables in the W3/W4 clamps and install the screws removed in step b; do not overtighten clamps as this will crimp the cables.

4.3.4 Power Requirements

The Model 4201 or 4202 instrument is set at the factory to accept a main power input of 120 ±10 VAC, single phase, 50-60 Hz (the North American standard). A 10-foot, 3-wire power cable (A504-89) for that voltage is included. If the power source to be used is this standard voltage, proceed to Section 4.3.6, Frame to Console Power Cabling. If not, follow the instructions in Section 4.3.5.

4.3.5 Nonstandard Main Power

If the power source to be used is not the North American standard, the power input connector, J5, on the loading frame connector panel can be altered to accept other voltages in the range of 90 to 250 VAC, 50-60 Hz (see Table 4-2).

CAUTION

The Model 4201 or 4202 is intended to operate from a single phase, two-wire grounded power source that does not apply more than 250 volts rms between the supply conductors or between the ungrounded supply conductors and ground. A 3-wire grounded power cable is essential for safe operation.

Table 4-2. Line Voltage Selection

If line voltage is:	Set AC input connector J5 to:
120 ±10 VAC	120 VAC (Std.)
240 ±10 VAC	240 VAC
100 ±10 VAC	100 VAC
220 ±10 VAC	220 VAC

NOTE

If the Model 4201 or 4202 system is to be adapted for 200-250 VAC operation, the power cable (A504-89) must be altered by adding a male plug that is specified for that power source outlet. Observe the following CEE wire color code for the cable:

Brown - high (live)
Light Blue - low (neutral)
Green & Yellow - earth/ground

To adapt the Model 4201 or 4202 for a different line voltage, change power input connector, J5, on the loading frame connector panel as follows:

a. Insert a sharp pointed tool into the middle of the connector and pry out the fuse holder, as shown in Figure 4-3. The number placed at the top when the holder is in position shows the voltage taps selected on the main power transformer. This is the line voltage which is to be used for system operation.

b. Change the fuse (F2) in the holder, if required (see NOTE below). Rotate the fuse holder until the desired voltage is at the top and press the holder firmly back into the connector.

NOTE

For 100-130 VAC operation, the fuse, F2, in connector, J5, should be a 12 amp, 3AB type (Instron Part No. 27-2-50). For 200-250 VAC operation, a 6 amp, 3AB type (Instron Part No. 27-2-52) should be used. Both types of fuses are supplied with the system.

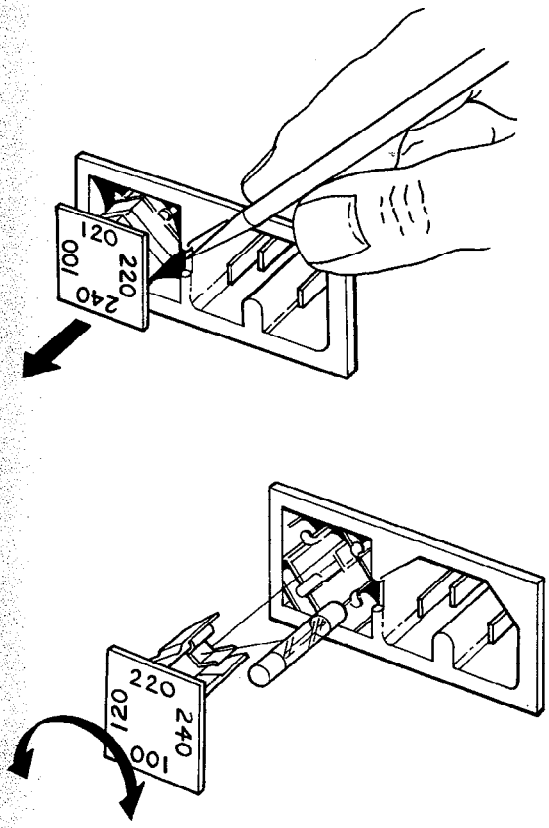

Figure 4-3. Changing Input Line Voltage Adapter

4.3.6 Frame to Console Power Cabling

Connect the Console Power Cable, W2 (A504-88), between J1 on the console connector panel and J4 on the frame connector panel. In this manner, the console always receives 120 VAC for any main power that is applied to the loading frame.

CAUTION

Do not connect the control console to any voltage source other than 120 ±10 VAC, 50-60 Hz.

4.3.7 Main Power Connection

Check that the main power switch on the front of the loading frame is OFF. Then plug the Input Power Cable, W1 (A504-89), into a convenient, properly grounded wall outlet of the correct voltage.

WARNING

To avoid electric shock, the power cable grounding conductor must be properly grounded.

NOTE

The Model 4201/4202 is installed at this point. The user should become familiar with the instrument and its controls and operating procedures before turning it on.

5.0 DESCRIPTION OF SYSTEM COMPONENTS

5.1 LOADING FRAME

5.1.1 Identification of Components

The main components of the Model 4201 and 4202 Loading Frames are shown in Figure 5-1 and are identified and described below.

1. LOADING FRAME - the part of the instrument where the test specimen is mounted and either a tension or compression loading is applied.

2. MOVING CROSSHEAD - the moving element within the loading frame which applies a load to the test specimen at commanded speeds.

3. LOAD CELL - the calibrated transducer in the moving crosshead which precisely measures the applied load.

4. LEADSCREWS - threaded rods which turn at commanded speeds and drive the moving crosshead.

5. FIXED CROSSHEAD - the top structure that supports the leadscrews.

6. LEADSCREW COVER - protective curtains that shield the leadscrews from debris due to specimen breakage and from accidental contact by the operator or fixtures.

7. GUIDANCE ROD - a bar, extending from the base beam to the fixed crosshead, that provides a rigid contact surface for a guide saddle. One guidance rod is located within each frame column.

8. GUIDE SADDLE - a guide saddle is mounted on each side of the moving crosshead. These saddles are installed to ride in contact with the guidance rods and maintain crosshead alignment as it moves within the frame.

9. PRELOAD NUT - a nut, mounted on each leadscrew beneath the moving crosshead, which positions a drive nut. By loosening or tightening the preload nuts, depending upon testing direction, forces are evenly translated between leadscrew and crosshead.

10. PRELOAD LEVER - a lever which is attached to a preload nut on each side beneath the crosshead. Each lever must be positioned, depending upon direction of increasing load, in accordance with the labels on the crosshead.

11. OVERTRAVEL LIMIT SWITCHES - these consist of first and second level limit switches which stop the moving crosshead. When a first level limit switch is actuated, the crosshead stops (as if the STOP key was pressed) and the TRAVEL status lamp lights. To restore operation, slide the Limit Stop on the rod away from the actuator or press the function key (UP/DOWN/JOG) to drive the crosshead away from the stop. The second level switch acts as a fail-safe device if a first level switch does not function. When a second level switch is actuated, the drive motor relay is deenergized and the crosshead stops. The TRAVEL and MOTOR status lamps light as indicators of this condition. To reset the system after contacting a second level switch: power down the system, then either slide the Limit Stop away from the actuator to release the switch, or use the manual positioning control (item 20) to move the crosshead away from the switch.

12. LIMIT SWITCH ACTUATOR - a plate on the moving crosshead that contacts the upper and lower limit stops.

13. ADJUSTABLE UPPER LIMIT STOP - when this stop is contacted, an overtravel limit switch is actuated and the crosshead stops. It should be set by the user to a point just beyond the expected maximum crosshead travel (extension) in the UP direction when tension testing, or just above the starting position (gage length) when compression testing.

14. ADJUSTABLE LOWER LIMIT STOP - when this stop is contacted, an overtravel limit switch is actuated and the crosshead stops. It should be set by the user to a point just beyond the expected maximum crosshead travel (extension) in the DOWN direction when compression testing, or just below the starting position (gage length) when tension testing.

15. LIMIT SWITCH ROD - a rod which supports the crosshead travel limit stops and actuates the overtravel limit switches.

16. UPPER GRIP COUPLING - the self-aligning connection between the upper grip or compression anvil and the load cell.

17. BASE GRIP ADAPTER - the rigid coupling between the lower grip and the loading frame base.

18. SHAFT ENCODER - this device generates an output in proportion to the revolutions of the intermediate shaft by which it is driven. The output, which is an incremental measure of the moving crosshead displacement, is used as feedback to maintain the commanded speed of the crosshead and to indicate extension of the specimen during a test.

19. MANUAL POSITIONING CONTROL ACCESS DOOR - a door on top of the drive motor housing which provides access to the crosshead manual positioning control mounted on the shaft of the motor. When this door is opened, an interlock deenergizes the motor relay, removing power to the motor and enabling the control to be turned. The MOTOR status lamp lights. When the door is closed, reset the system by momentarily shutting down system power.

20. CROSSHEAD MANUAL POSITIONING CONTROL - this control provides a means to manually move the crosshead away from the second level overtravel limits (item 11). Clockwise rotation of this control moves the crosshead up, as shown by the label on the underside of the access door.

21. CROSSHEAD DRIVE MOTOR - the motor which drives the moving crosshead at commanded speeds.

22. MOTOR RELAY - this relay provides current switching between the power amplifier and the crosshead drive motor. It is energized through the second level overtravel limit switches, the interlock on the drive motor housing access door, and the DIN Stop switch option.

23. MOTOR BELT - this belt transfers the rotary motion of the drive motor to an intermediate shaft.

24. MAIN DRIVE BELT - this belt transfers the rotary motion of the intermediate shaft to the leadscrew drive pulleys.

25. MAIN DRIVE BELT TENSION ADJUSTMENT - this is an adjustable assembly which is set to maintain an optimum tension on the main drive belt.

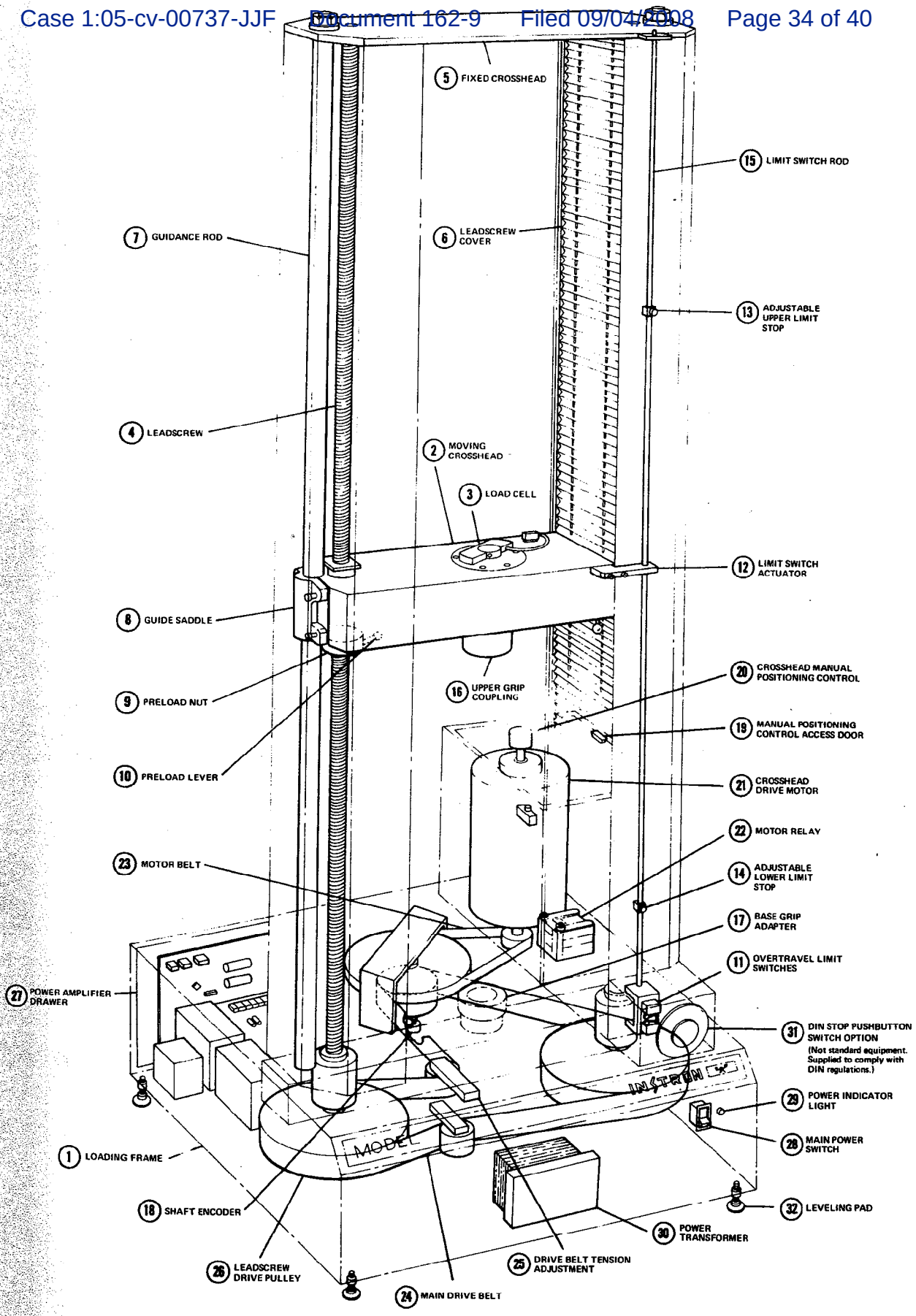

Figure 5-1. Model 4201 and 4202 Loading Frames Components and Controls

26. LEADSCREW DRIVE PULLEYS - these pulleys, which are driven by the main drive belt, are mechanically connected to the leadscrews and complete the drive train from the motor.

27. POWER AMPLIFIER DRAWER - this assembly contains the SCR power controller for the drive motor, and the interface (Frame Board) between the loading frame and control console. Cable connectors and system fuses are mounted on the panel of this drawer at the rear of the loading frame.

28. MAIN POWER SWITCH - the on/off switch for controlling AC power to the system.

29. POWER INDICATOR LIGHT - when lit, this device shows that AC power is applied to the system.

30. POWER TRANSFORMER - a multitap transformer which accepts primary voltages from 100 to 240 VAC, single phase, 50/60 Hz. The output of the transformer is always 120 VAC for system power.

31. DIN STOP PUSHBUTTON SWITCH option - when pushed, this switch immediately stops the moving crosshead by deenergizing the drive motor relay. The MOTOR status lamp lights. The switch locks in the OFF position. To restore system operation, first set main power switch off, release the Stop switch by turning it clockwise, then set main power on. This switch is not standard equipment, but is supplied to comply with DIN regulations.

32. LEVELING PAD - Four pads are used for leveling the loading frame at installation. One adjustable pad is located at each corner of the frame base.

5.1.2 Connector Panel

The panel of the Power Amplifier Drawer, Figure 5-2, is also the connector panel for the loading frame.

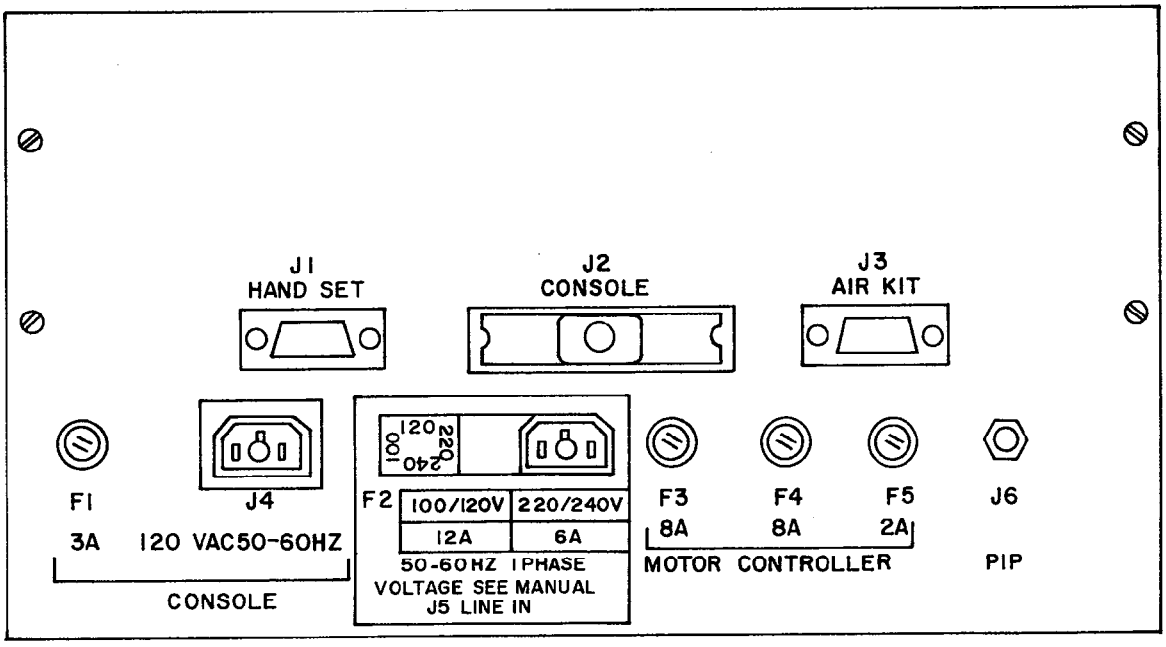

Figure 5-2. Loading Frame Connector Panel
(Power Amplifier Drawer Panel)

The connectors and the system fuses on this panel are described below.

J1 (HANDSET) - a connector for an optional remote crosshead control handset.

J2 (CONSOLE) - a 50-way connector for the interface cable between system console and loading frame.

J3 (AIR KIT) - a connector for the interface cable from an optional pneumatic grip control.

J4 (CONSOLE) - the AC outlet for console power. This source supplies 120 VAC, 3 A, 50/60 Hz, derived from the system input voltage.

J5 - the AC connector for system main power. This connector and the fuseholder for F2 are an integral assembly. The cap of the fuseholder can be removed and repositioned to select the proper taps of the input power transformer to match the supply voltage. This must be done at system installation (see Section 4.3.5, Nonstandard Main Power).

J6 (PIP) - a jack used for connecting a remote recorder pen pipping device such as an optional remote event marker control or an incremental extensometer.

F1 (CONSOLE) - a 3-ampere fuse in the power line to the console AC outlet.

F2 (LINE) - the system power fuse. The rating of this fuse depends upon the supply line voltage, as shown in the table beneath the fuse.

F2 Rating Table - the required fusing for F2, depending upon the AC input voltage applied to the system. (See Section 4.3.5, Nonstandard Main Power).

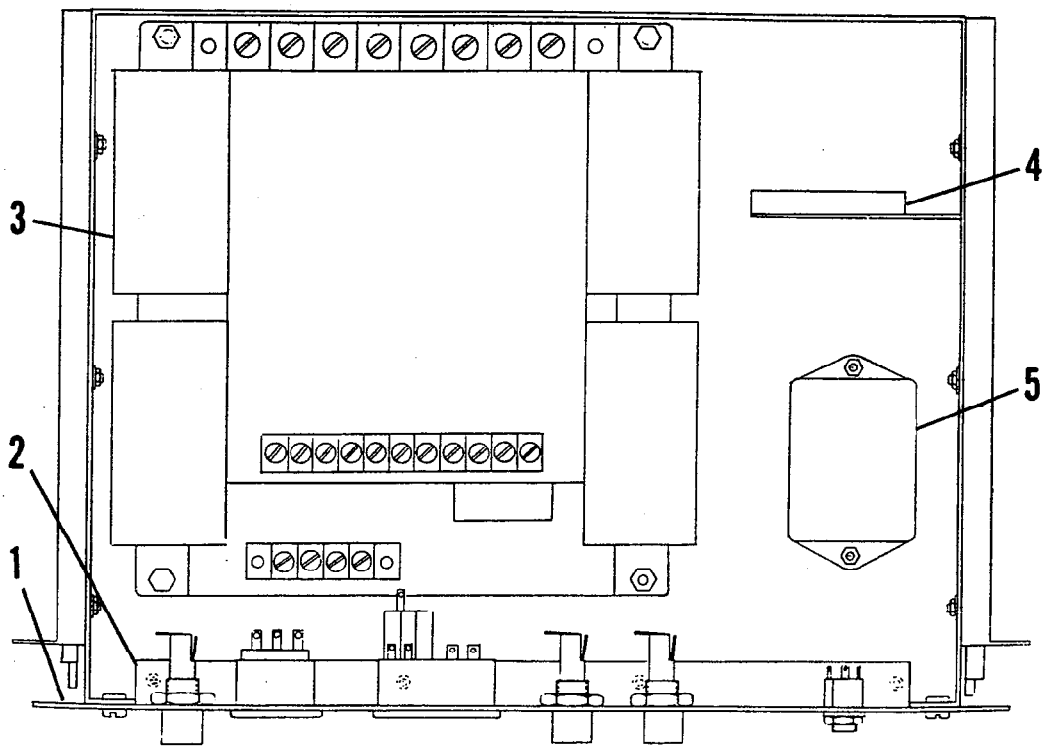

Figure 5-3. Power Amplifier Drawer

F3, F4 and F5 (MOTOR CONTROLLER) - these are fuses in the AC input lines to the power amplifier (Motor Controller) for the crosshead drive motor. F3 and F4 are each 8-ampere fuses for the 120 VAC input, and F5 is a 2-ampere fuse for the 240 VAC input to the motor controller.

5.1.3 Power Amplifier Drawer

The components of the Power Amplifier Drawer are shown in Figure 5-3 and described below. This is a slide-mounted drawer with its panel secured to the loading frame by four screws. There are high voltages within this drawer and high temperatures on the heat sink of the SCR power controller. Hence, this drawer should never be opened when the system is operating.

WARNING

Dangerous voltages and high temperatures are present within the Power Amplifier Drawer. Always set the main power switch to off and unplug the AC power input cable before opening the drawer.

1. CONNECTOR PANEL - the electrical connector panel for the loading frame (Section 5.1.2).

2. FRAME BOARD - a pc board, mounted on the rear of the connector panel, which provides the interface between loading frame and control console. The functions of this board include frame identification, closed loop control of the crosshead position through the encoder feedback and drive motor control error signals, and the interchange of status and control logic signals between the frame and console.

3. MOTOR CONTROLLER - the power controller for the crosshead drive motor. This device uses silicon controlled rectifiers (SCR's) to rectify the crosshead positional error signal and proportion the duration of motor current pulses, thus controlling motor power.

4. CONNECTOR BRACKET - retains all cable connections to the drawer.

5. FILTER - provides filtering to prevent possible interference on the AC power line caused by the pulsed motor controller.

5.2 CONTROL CONSOLE

The control console provides an interface between operator, loading frame and peripheral devices (recorder, printer, computer) by the functions contained on a crosshead control panel, a basic panel and three optional panels. The following paragraphs identify and describe these panels and other main components of the control console.

5.2.1 Crosshead Control Panel

The Crosshead Control Panel (Figure 5-4), located on the left front of the console, contains the push-button switches (keys) used for manually controlling crosshead functions. The STOP, UP, DOWN and RETURN keys each contain an indicator lamp which is lit when the function of the key, as described below, is controlling the crosshead. The JOG keys are only functional when held depressed.

STOP - crosshead stops.

UP - crosshead moves up at programmed speed.

DOWN - crosshead moves down at programmed speed.

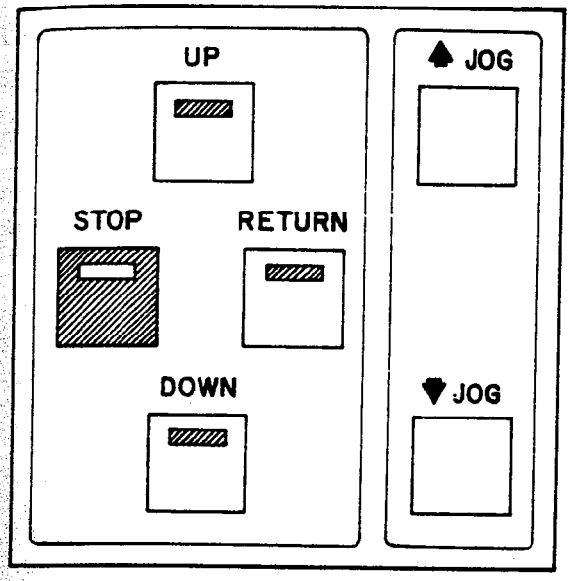

Figure 5-4. Crosshead Control Panel

RETURN - crosshead returns at a speed which increases exponentially to maximum and then decreases exponentially to stop crosshead at gage length.

*JOG (up) - crossheads moves up at a speed which increases exponentially to maximum and continues as long as the key is depressed.

*JOG (down) - crosshead moves down at a speed which increases exponentially to maximum and continues as long as the key is depressed.

***NOTE**

If the crosshead is moving when a JOG key is depressed, it will stop and then the jog action will begin.

5.2.2 Basic and Optional Panels

The basic and three optional panels of the control console are identified in Figure 5-5. The function of the controls and indicators on these panels are defined in Chapter 6.

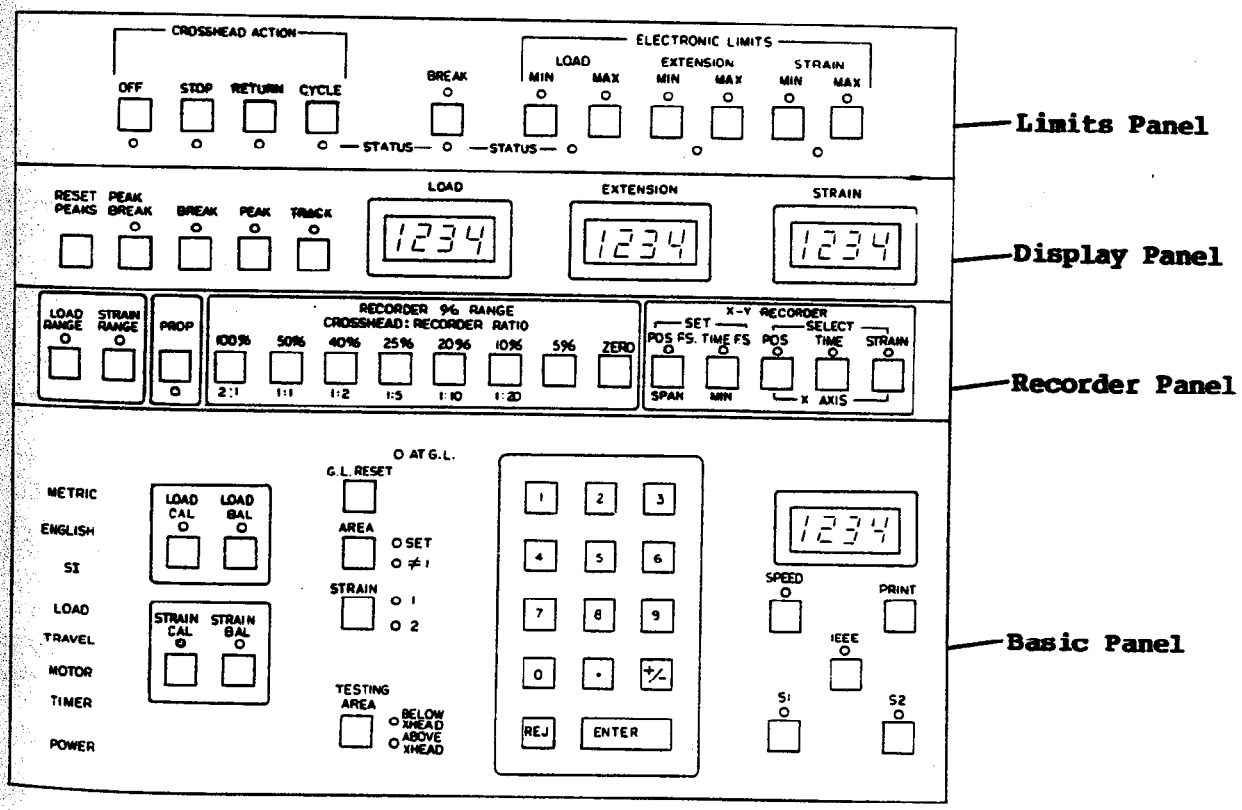

Figure 5-5. Control Console - Basic and Optional Panels

5.2.2.1 Basic Panel

The Basic Panel consists of push-buttons to enter test functions, a numeric keypad and a 4-digit LCD display. Status indicators on the left-hand side of the panel, when lit, signify to the user that a fault has occurred. The current units (English, metric, S.I.) in use by the testing system are also shown in this area. The panel provides the control of:

Load cell calibration
Crosshead speed selection
Gage length
Area compensation
Testing area definition
Strain transducer calibration
Strain channel selection
Printer operation
IEEE bus enable/disable
Special Software - Diagnostics

5.2.2.2 Display Panel

The optional Display Panel contains three 4-digit LCD displays and control keys to allow load, extension and strain to be tracked during a test, and the peak and break values of these parameters to be observed. All values are computed and saved at the end of each test and may be viewed as needed during and after the test. An indicator lamp shows the active selection key.

5.2.2.3 Limits Panel

The optional Limits Panel allows the user to specify a crosshead action during a test to be independently based on the following limit conditions:

LOAD - minimum, maximum

EXTENSION - minimum, maximum

STRAIN (1 & 2) - minimum, maximum

BREAK - detection

The action assigned at a limit can be:

STOP - stop crosshead at current position.

RETURN - return crosshead to gage length.

CYCLE - change direction of crosshead motion at the limit.

OFF - no action

An indicator lamp lights at the active limit and at the related crosshead action key. A STATUS indicator lamp is lit whenever a limit is set to control a crosshead action. Whenever a STOP or RETURN action occurs as the result of a limit, the related STATUS lamp flashes.

5.2.2.4 Recorder Panel

The optional Recorder Panel permits the choice of using an X-Y or strip chart recorder (especially, the Instron X-Y and Strip Chart recorders) as a readout device.

Load and strain range keys on the panel allow the user to select an operating range for each parameter from a predefined list of gain factors. The operating range of the recorder is defined as the percentage of the maximum capacity of the installed load cell that causes a full scale reading on the recorder.

A proportional mode provides a series of selectable ratios between crosshead and chart motions for a strip chart recorder. Parameter selection controls allow time, crosshead position or strain to drive the X-axis of an X-Y recorder, with settable full scale position span or time base.

5.2.3 Connector Panel

The connector panel for the

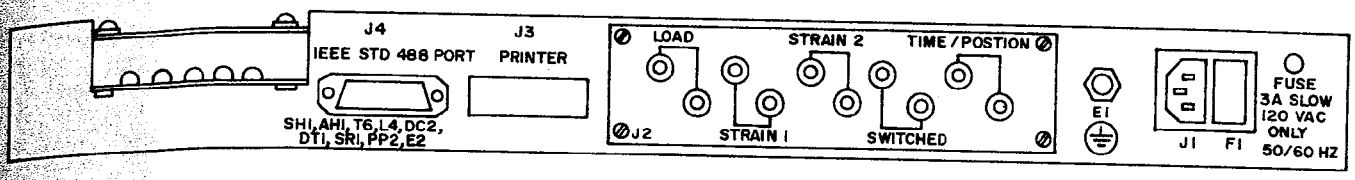

Figure 5-6. Connector Panel - Control Console

control console (Figure 5-6) is located on the rear of the unit at the base. The components on this panel are described below. The loading frame, load cell, strain channel and recorder cables connect internally to the motherboard of the console (Section 5.2.4) and extend through a cutout on the left-hand side of the panel.

J1 - the AC connector for console main power. The input power to the console must be 120 VAC, 50/60 Hz only. This voltage is available from J4 on the loading frame connector panel.

F1 - a 3-ampere fuse for the power input to the console.

J2 - LOAD, STRAIN 1, STRAIN 2, SWITCHED, TIME/POSITION - parallel outputs of the signals used for recorder operation, made available for signal monitoring purposes at the convenience of the user. (See Section 8.5.)

J3 - PRINTER - a connector for cabling to an optional printer with an RS-232 interface capability.

J4 - IEEE STD 488 PORT - a connector for the cabling from the IEEE compatible digital interface to an optional programmable computer.

5.2.4 Console Components

The main components of the control console are shown in Figure 5-7. The circuit boards for the system and several connectors for external cables are mounted on a motherboard, as described in Section 5.2.5. An additional board, mounted beneath the front panel, provides the interface between the Central Control Board (or CPU) and the front panel.

The console power supply and its cooling fan are mounted on the left-hand side. Also in this location is a power line filter and a 120/240 VAC switch. The switch changes the primary taps on the power supply transformer and enables the console to be powered from a 240 VAC, 50/60 Hz, single phase source for factory use only. The console must always be powered from the loading frame AC outlet, J4, which supplies 120 VAC. In this manner, the console and frame have a common power source and will be controlled by the same main power switch.

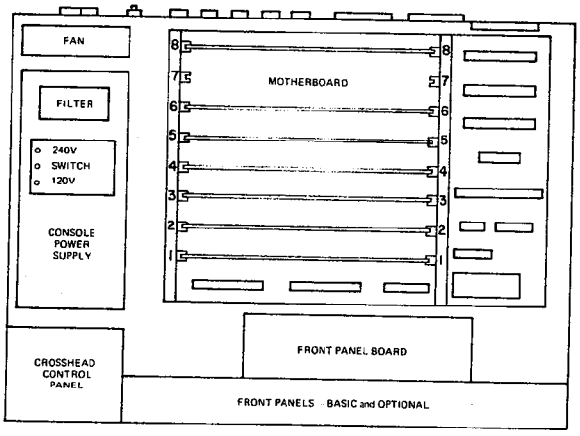

Figure 5-7. Control Console Components