EXHIBIT A

US005988078A

United States Patent [19]

Levine

[11] Patent Number: 5,988,078

[45] Date of Patent: Nov. 23, 1999

[54] **METHOD AND APPARATUS FOR RECEIVING CUSTOMIZED TELEVISION PROGRAMMING INFORMATION BY TRANSMITTING GEOGRAPHIC LOCATION TO A SERVICE PROVIDER THROUGH A WIDE-AREA NETWORK**

[75] Inventor: **Michael R. Levine**, Boca Raton, Fla.

[73] Assignee: **Gemstar Development Corp.**, Pasadena, Calif.

[21] Appl. No.: **08/947,950**

[22] Filed: **Oct. 9, 1997**

Related U.S. Application Data

[63] Continuation of application No. 08/287,343, Aug. 8, 1994, Pat. No. 5,692,214, which is a continuation-in-part of application No. 07/848,338, Mar. 9, 1992, abandoned, which is a continuation-in-part of application No. 07/802,249, Dec. 4, 1991, abandoned

[51] **Int. Cl.**[6] **G06F 13/14**; H04N 7/03

[52] **U.S. Cl.** **110/8**; 348/13; 348/460; 709/218

[58] **Field of Search** 395/200; 348/13, 348/460; 709/218; 710/8

[56] **References Cited**

U.S. PATENT DOCUMENTS

4,521,914	6/1985	Petrovic	455/158.5
4,630,108	12/1986	Gomersall	348/13
4,734,765	3/1988	Okada et al.	348/107
4,751,578	6/1988	Reiter et al.	348/564
5,223,924	6/1993	Strubbe	358/86
5,291,554	3/1994	Morales	380/5
5,382,983	1/1995	Kwoh et al.	348/716
5,404,505	4/1995	Levinson	707/10
5,485,219	1/1996	Woo	348/460
5,534,911	7/1996	Levitan	348/1
5,619,274	4/1997	Roop et al.	348/461
5,663,757	9/1997	Morales	348/13
5,703,795	12/1997	Mankovitz	345/327
5,781,246	7/1998	Alten et al.	348/569

Primary Examiner—Thomas C. Lee
Assistant Examiner—Albert Wang
Attorney, Agent, or Firm—Gifford, Krass, Groh, Sprinkle, Anderson & Citkowski, PC

[57] **ABSTRACT**

A personal computer is used to assist in the selection of television programs to be recorded at future times and to control a video tape recorder to implement the selected recordings. An application program allows the computer to receive data representing a schedule of future programs. The operator can perform data base operations on the data to obtain listings of programs of particular interest. A program to be recorded is selected by moving a cursor into position with the display of the program listing on the computer. An output device generates infrared signals to control the video tape recorder and a cable box to tune and record a selected program.

10 Claims, 3 Drawing Sheets

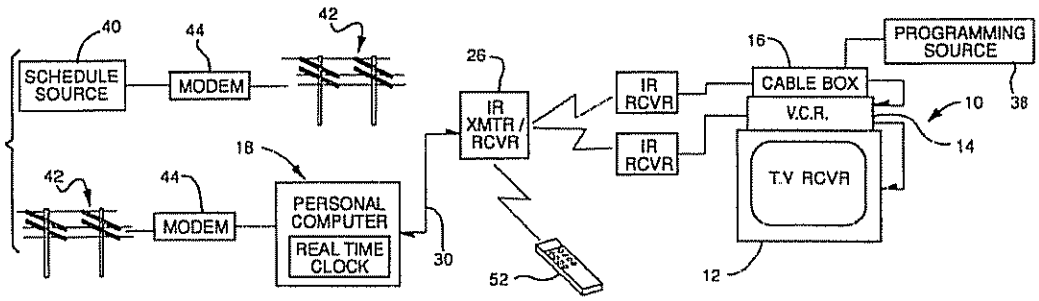

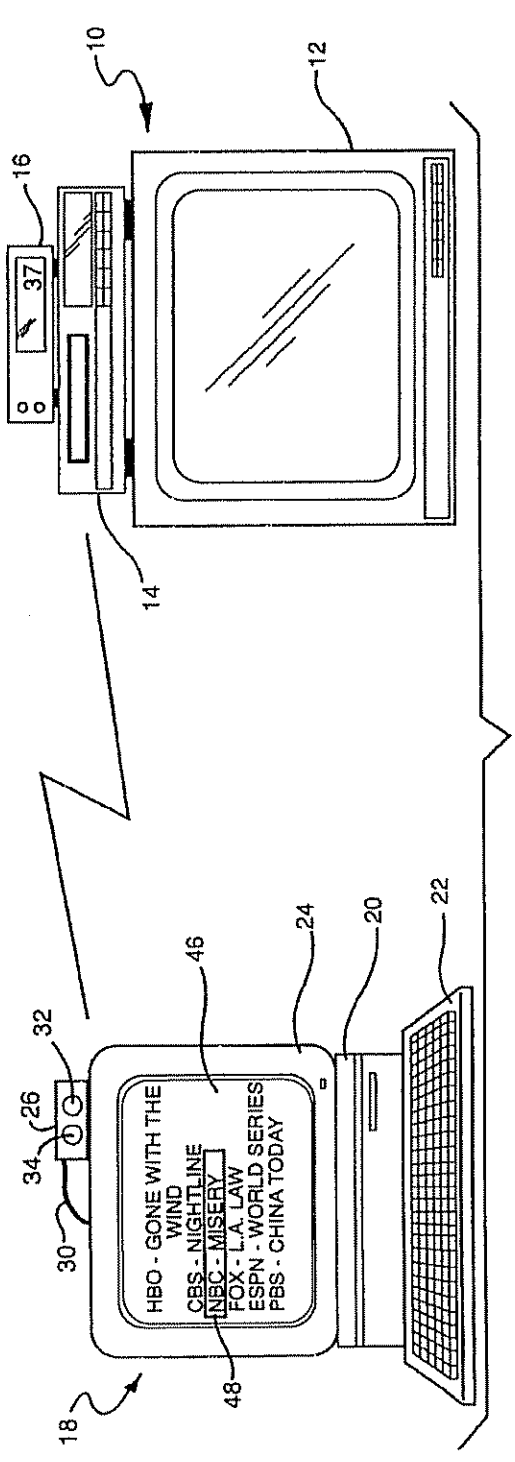
10
12
16
37
14
HBO - GONE WITH THE WIND
CBS - NIGHTLINE
NBC - MISERY
FOX - L.A. LAW
ESPN - WORLD SERIES
PBS - CHINA TODAY
46
24
20
22
32
26
34
30
48
18

FIG - 1

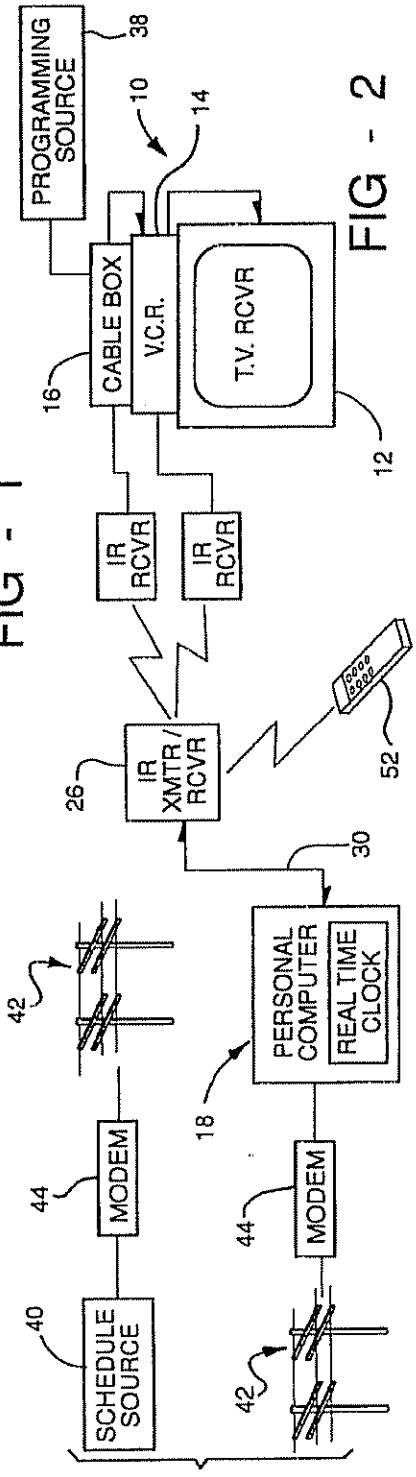
PROGRAMMING SOURCE
38
10
14
CABLE BOX
V.C.R.
T.V. RCVR
16
12
IR RCVR
IR RCVR
52
IR XMTR / RCVR
26
30
PERSONAL COMPUTER
REAL TIME CLOCK
18
42
MODEM
44
MODEM
44
SCHEDULE SOURCE
40
42

FIG - 2

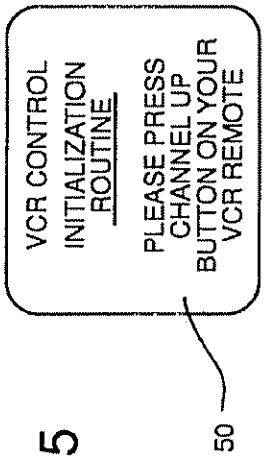

FIG - 5

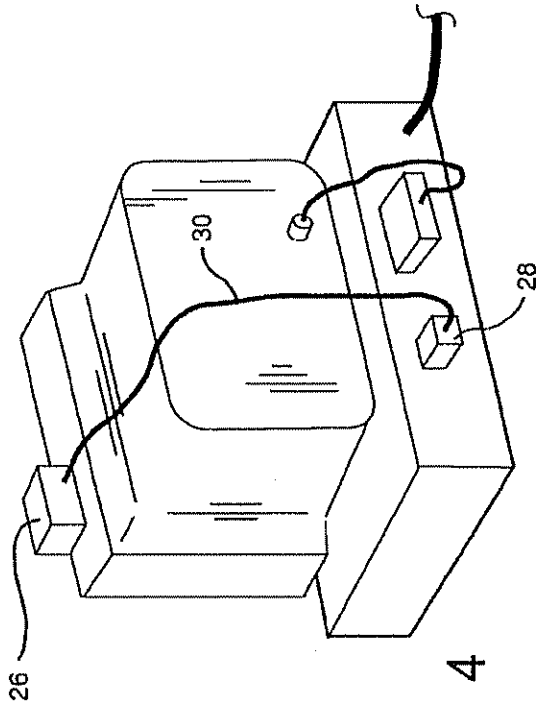

FIG - 4

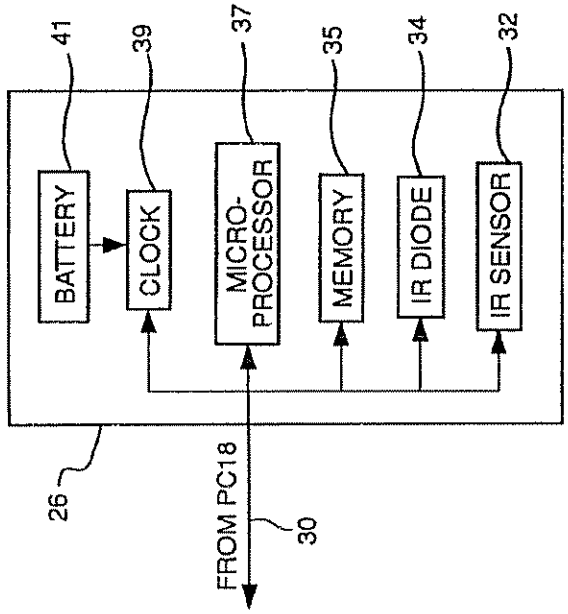

FIG - 3

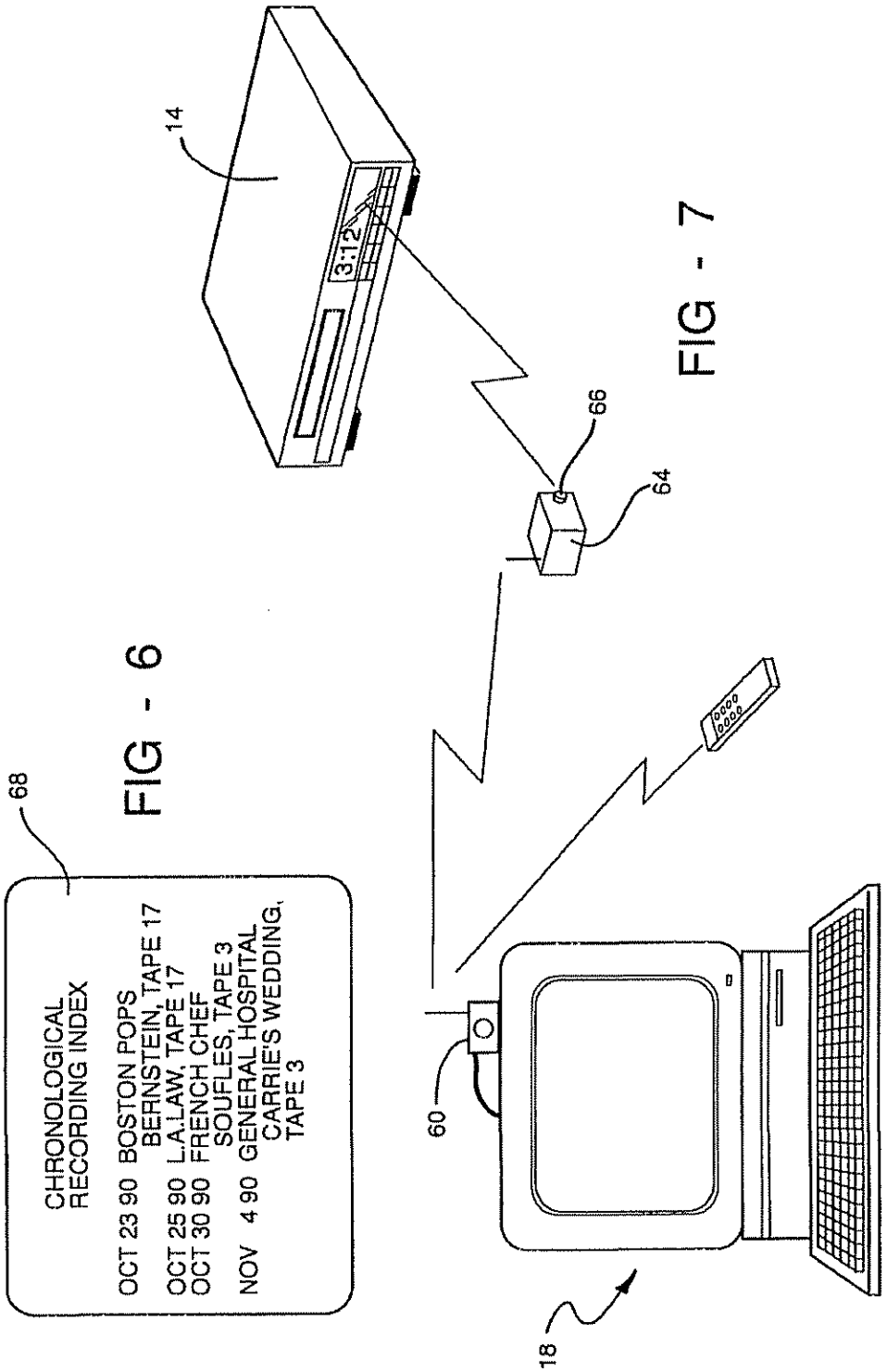
14
3:12
66
64
68
CHRONOLOGICAL
RECORDING INDEX
OCT 23 90 BOSTON POPS
BERNSTEIN, TAPE 17
OCT 25 90 L.A.LAW, TAPE 17
OCT 30 90 FRENCH CHEF
SOUFLES, TAPE 3
NOV 4 90 GENERAL HOSPITAL
CARRIE'S WEDDING,
TAPE 3
60
18

FIG - 6

FIG - 7

METHOD AND APPARATUS FOR RECEIVING CUSTOMIZED TELEVISION PROGRAMMING INFORMATION BY TRANSMITTING GEOGRAPHIC LOCATION TO A SERVICE PROVIDER THROUGH A WIDE-AREA NETWORK

RELATED APPLICATIONS

This is a continuation of application Ser. No. 08/287,343, filed Aug. 8, 1994, now U.S. Pat. No. 5,692,214 which is a continuation-in-part of Ser. No. 07/848,338, filed Mar. 9, 1992, now abandoned, which is a continuation-in-part of Ser. No. 802,249, filed Dec. 4, 1991 (now abandoned)

FIELD OF THE INVENTION

This invention relates to a method and apparatus for controlling a video recorder to allow the unattended recording of future occurring programs using a personal computer and more particularly to such a method and apparatus which provides a display of a schedule of future programming available to the recorder on the personal computer.

BACKGROUND OF THE INVENTION

My U.S. Pat. No. 4,908,713 discloses a system for providing a schedule of future video programming available to a video recorder to a database memory located at the recorder so that the operator may display selected sections of the future schedule as an aid in choosing programs for recording. The schedule may be provided to the memory and updated either by broadcasting schedule information or by delivering disposable memories to the system on a subscription basis. Other of my applications disclose such systems in which the video recorder is programmed for unattended recording of a future program by simply pointing a cursor at the listing of that program on the schedule display. Since the system already stores the data required to record the program, it is unnecessary for the operator to re-enter the same data. My application Ser. No. 802,249 further discloses such a system in which the local memory stores the identification of programs that have been recorded and allows their display in order to select previously recorded programs for viewing.

These systems greatly simplify the problems of selecting programs for recording, actually performing the recording process, and viewing recorded programs. They suffer from the disadvantage of adding hardware and software to existing video cassette recorders or cable boxes which do not contain a schedule memory and a database program for selecting particular entries on the memory for display.

SUMMARY OF THE INVENTION

The present invention allows the implementation of the electronic schedule memory and cursor-based programming on a conventional video recorder through use of an associated personal computer which communicates with the video recorder via infrared signals of the type used for remote control of the video recorder. The infrared signals are preferably generated by a transmitter connected to an output port of the personal computer and are driven by signals generated by an application program run by the personal computer. The same transmitter may control the tuner of an associated cable box.

Future programming schedule information may be provided to the personal computer from a remote database by telephonic communication, by broadcast, or by subscription provision of disposable memories. The schedule information may be displayed on the monitor of the personal computer under control of a database program allowing chronological, alphabetical or topical selection and the operator may move a cursor on the display screen to point to a particular program to select it for future recording. The remote transmitter connected to the personal computer output port can send signals to the video recorder at the time the selection is made, allowing the future unattended programming memory of the video recorder to initiate the recording of a specific channel at the proper time or the remote may exercise control over the video recorder at the time the recording is to be made.

The personal computer transmitter may be instructed as to the particular code systems used by the video recorder remote control either by information transmitted from a remote database provider based on the identification of the make of the video recorder by the computer use, or through use of an initialization program which displays commands to the computer operator on the monitor of the personal computer directing the operator to press selected buttons on the remote transmitter provided with the video recorder. The computer program thus learns and stores the required remote codes. In the same manner, the personal computer can control an associated cable tuner to ensure that the channel specified for recording is provided to the VCR. The personal computer program can also store and display an index of programming that has been recorded by the system.

Through use of the method and apparatus of the present invention the advantages of an electronic schedule guide and cursor-controlled programming of the video recorder may be achieved without the provision of a specialized form of cassette recorder or cable box.

Other objectives, advantages and applications of the present invention will be made apparent by the following detailed description of the preferred embodiment of the invention. The description makes reference to the accompanying drawings in which:

DETAILED DESCRIPTION OF THE DRAWINGS

FIG. 1 illustrates a personal computer and television viewing system including a TV receiver, a video recorder and a cable box, implementing the preferred embodiment of the present invention;

FIG. 2 is a schematic diagram of the preferred embodiment of the invention;

FIG. 3 is a schematic diagram of the IR transmitter/receiver;

FIG 4 is a perspective view of the rear of a personal computer illustrating the method of attachment of an infrared transmitter and receiver to an I/O port of the computer;

FIG 5 is an illustration of a screen displayed on the personal computer monitor during an initialization procedure; and

FIG 6 is an illustration of a personal computer screen displaying an index of recorded programs and the tape cassettes on which each is recorded; and

FIG 7 is an illustration of a second embodiment of the invention in which the personal computer and video recorder are located remotely from one another and the output signals from the personal computer are transmitted by radio to an infrared transmitter for control of the video recorder.

DETAILED DESCRIPTION OF THE PREFERRED EMBODIMENT

Referring to FIG. 1, the preferred embodiment of the invention employs a television recording and receiving

system, generally indicated at **10**, comprising a conventional television receiver **12**, a video cassette recorder **14** and a cable tuner and descrambler box **16**. A variety of known forms of interconnection can be made between the cable box **16**, the recorder **14** and the television receiver **12** to allow either the recording or viewing of programs tuned by the cable box **16** or the simultaneous viewing of one program and the recording of another. The present invention is equally applicable to broadcast receiver systems which do not employ a cable box and to satellite receivers.

The video recorder **14** will normally be of the type employing an infrared remote control (not shown) as will the tuner in the cable box **16**. The VCR **14** may, but need not necessarily, incorporate a future, unattended recording memory which includes a real time clock (not shown)

The method and apparatus of the present invention further utilizes a conventional personal computer, generally indicated at **18**, incorporating a main computer housing **20**, a keyboard **22** and a monitor **24**. The term "personal computer" is used broadly to incorporate work stations, minicomputers and portable units

The personal computer **18** is conventional but is provided with a special application program to implement the present invention. The organization of this application program is well within the skill of a programmer using the functional description of the program provided herein.

An infrared transmitter and receiver **26** is connected to an I/O port of the personal computer, preferably a parallel port, by a male connector **28** and a cable **30**. The infrared unit **26** incorporates a conventional infrared signal detector **32** and an infrared emitter **34**. In alternative embodiments the signals could represent other forms of electromagnetic or supersonic transmission, "infrared" is hereinafter used to define the generic form of signals.

The infrared signals emitted by the unit **26** are picked up by the infrared remote receiver of the video recorder **14** and may also be picked up by the infrared recorder of the cable box **16** to control its tuner.

The application program is loaded into the personal computer via a diskette or the like. The program requires as data the schedule of future programming available to the system **10** from a programming source **38**, such as a cable or the like, for a particular period of time such as a week or month.

In the preferred embodiment of the invention the schedule information is provided to the personal computer **18** from a remote database **40**, which may constitute a database provider such as "COMPUSERVE," "PRODIGY" or the like. This information may be customized for the cable service **38** available to the system through an initialization routine in which the computer operator keys in the postal ZIP code of his location and, if necessary, an identification of the cable service provider. The head end database uses this information to provide the computer **18** with the schedule of programming for that service. The operator of the personal computer system **18** may communicate with the schedule source over phone lines **42** using modems **44** at each end. Alternatively, the personal computer could employ a program in which the system automatically communicates with the schedule source **40** at predetermined periods, such as each morning at 4:00 a.m. or the like, to update the schedule stored in the personal computer **18**. As another alternative, diskettes could mailed out to the personal computer on a subscription basis or the schedule information could be provided to the personal computer via cablecast or broadcast.

Through use of a database program employing menus, submenus and the like, the operator may obtain a display of programming for a particular period of time, such as that illustrated at **46** in FIG. **1**. To select a listed program for future recording the operator may move a cursor **48** into super-position with the listing. Alternatively, two or three digit numbers could be associated with each listing and the operator could signal a programming selection by hitting an appropriate number on the keyboard **22**.

In the preferred embodiment of the invention this selection transfers information relating to the programming selection to a memory **35** within the IR unit **26** (FIG. **3**). The unit **26** also includes a microprocessor **37**, a real time clock **39** and a power supply battery **41**. The microprocessor **37** continually compares the present time signal from the clock **39** with the start time of the programs to be recorded as stored in the memory **35** and sends an appropriate infrared code to the VCR **14** (and, if appropriate, the cable box **16**) at the start time. A similar signal at the programmed conclusion time of the program terminates the recording. This arrangement eliminates the need for the computer to continually remain in the on state.

In alternative embodiments of the invention employing programmable cable tuners or programmable satellite receivers, the infrared transmissions could be used to program these units.

Alternatively, the control signals to the IR unit **26** may be provided in real time by the computer **18** under control of its internal clock. The IR unit might then simply consist of an IR diode connected to the personal computer **18** by a long wire so the diode may be placed near the receiver **10**. At the time the recording is to be initiated, the personal computer transmits signals from an I/O port through the cable **30** to the infrared transmitter/receiver **26**. The unit **26** then send signals to the video cassette recorder **14**, which tune the set to the required channel and initiates the recording. Signals might also be sent to the cable box **16** to cause it to tune to the appropriate channel. As a third alternative, when the operator makes a programming selection, the information relating to that selection, including channel and the start and stop time could be immediately sent from unit **26** to video cassette recorder **14** to program the recorder for the future unattended recording of the desired program.

Alternatively the unit **26** may be detachable from the computer **18** so that after it is loaded with data on programs to be recorded it may be detached and moved into proximity with the receiver system **10**, which may be located in another room.

To perform the transmission function, the personal computer **18** requires information as to the nature of the remote control codes used by the video recorder **14** and the cable box **16** if that is additionally to be controlled. Preferably, this information is provided from the remote database **40** during an initialization routine in which the operator keys in the identification of the make and model of the VCR and cable box. Alternatively, to acquire this information, the application program for the personal computer may go through an initialization routine using screens of the type illustrated at **50** in FIG. **5**. These screens advise the computer operator to press selected buttons on the remote control transmitter **52** for the VCR **14** or the transmitter for the cable box **16**. The personal computer application program- receives signals from the IR sensor **32** and stores these codes for use in transmitting control signals to the video recorder **14** and the cable box **16**. The application program may alternatively store a database of the control codes for popular video

recorders or cable boxes and thus allow the unit to be identified by only pressing one or two selected keys, or it may require the operator to go through all of the keys in order to develop the appropriate remote control schedule.

In another embodiment of the invention the unit **26** includes sound detection apparatus. This provides several advantages, including the ability to receive information in acoustic form either from the personal computer or over a telephone line, for example using an acoustic coupler. An increasing number of conventional personal computers are now provided in standard form with a sound generating capability, and even if not factory supplied, numerous sound-generating modules and add-on cards are widely available as options. With such a capability residing in the personal computer, information may be transmitted from the personal computer to the module **26** in acoustical form. For example, information pertaining to a program to be recorded may be delivered in this manner, as well as any control code information required for proper activation and/or tuning of other system components, including the video recorder or cable box, to ensure that the proper channel is tuned at the appropriate time.

The ability to accept an acoustical signal may further facilitate an entirely wireless implementation of module **26**, and may also enable module **26** to be partially or completely compatible with automated VCR programming techniques, including the VCRPlus™ system which is currently being marketed commercially. With VCRPlus™ program listings include a multi-digit numerical code which is entered by an operator to bring about the automatic, unattended recording of a particular program without the need for entering a more sophisticated sequence of information such as program start time, stop time, channel tuning, and so forth, as is presently entered through typical on-screen programming sequences. Certain of the VCRPlus™ modules contain acoustic couplers, enabling them to be programmed over a standard telephone line. Utilizing this capability, a customer dials a service telephone number and informs a representative or uses touch tone codes to enter information such as VCR make/manufacturer, cable tuner make/manufacturer, and geographic information, for example, in the form of a zip code. Given this information, the system then down-loads the appropriate control codes to be used by the VCRPlus™ module to ensure that the entry of a VCRPlus™ numerical code records the desired program for that user in their particular geographic area.

The present invention may take advantage of some or all of the VCRPlus™ features or similar features of any similar automated programming system. If the database received and stored in the personal computer by the present invention includes encoded program information such as VCRPlus™ codes, these may be delivered directly from the personal computer to the module **26** instead of more detailed program-related information. Although presently available VCRPlus™ control units typically only receive control code information in acoustic form, with the numerical code associated with a desired program entered via keypad, such units contain all of the hardware necessary to accept the numerical code in acoustic form as well. In such a case, then, with the present invention storing a large database of programs in the personal computer, the VCRPlus™ code alone may be delivered to the remote unit **26** to bring about the desired programming sequence. In the event that the unit **26** includes a sound detection capability, the numerical code may be transmitted by the personal computer to the module **26** in acoustic form, in addition to the remote-control codes, which may also be delivered in acoustic form, either from the personal computer or over a phone line as is currently the case with the VCRPlus™ system. In the event that the personal computer is used to transmit the control codes to the module **26**, regardless of the form in which such codes are delivered, a look-up table may be provided to the personal computer either in disk form or through a separate telephonic connection, and upon entry of equipment make/model and any required geographic information by the operator through the keyboard provided on the personal computer, a look-up may be carried out by the computer so that the appropriate control codes are used for all equipment involved.

The embodiment of the invention illustrated in FIG. **7** is utilized in systems where the cassette recorder **14** is located a large distance from the personal computer **18**, such as in another room of the house. In this system the remote I/R transmitter **26** is replaced by a radio transmitter **60**. The radio signals are received by a remote receiver **64** disposed physically in front of the video recorder **14**. Receiver **64** includes an infrared transmitter **66** and the received radio signals are transmitted into serial infrared commands which are transmitted by the unit **64** to the infrared receiver of the video recorder **14**.

The application program for the remote television receiver **18** may also maintain a database of the programs that have been recorded by the system and allow display of these programs on the monitor of the personal computer. The identifying information may include codes as to the nature of the program such as a tennis match, comedy, movie or the like to allow menu-driven database operations to be used in the selection of programming for viewing. The information may record storage location of the programming, in terms of video cassettes, which the operator may enter into the system via the keyboard. A typical screen of this index is illustrated at **68** in FIG. **6**.

Having thus described my invention, I claim:

1. In a television distribution arrangement wherein a plurality of geographically dispersed television viewing locations receive television programming from a source of such programming, a method of receiving information specific to the type of programming available to a particular one of the viewing locations, the method comprising the steps of:

providing a computerized unit at the particular viewing location, the unit including an operator input and a modem;

establishing a connection to a wide-area network through the modem;

transmitting, from the computerized unit, information to a service provider through the wide-area network regarding the geographical location of the particular viewing location; and

receiving, from the service provider, information specific to the type of programming available to the particular viewing location.

2. The method of claim **1**, wherein the information transmitted to the service provider includes the Zip Code associated with the particular viewing location.

3. The method of claim **1**, wherein the information received from the service provider includes a schedule of the television programming available to the particular viewing location.

4. The method of claim **1**, wherein the computerized unit is interfaced to a display, and wherein the method further includes the step of displaying the information specific to the type of programming available to the particular viewing location.

5. The method of claim 1, wherein the computerized unit further includes a memory for storing the information specific to the type of programming available to the particular viewing location.

6. A method of receiving customized television programming schedule information, comprising the steps of:

providing, at a television viewing location, a controller interfaced to a bidirectional modem and a display device;

establishing a connection to a wide-area network through the modem;

transmitting, from the television viewing location, information to a service provider through the wide-area network regarding the geographical area of the viewing location;

receiving, from the service provider, television programming schedule information specific to the viewing location; and

viewing the information on the display device

7. The method of claim 6, wherein the information transmitted to the service provider through the wide-area network regarding the geographical area of the viewing location is the Zip Code associated with the viewing location.

8. A system enabling a viewer of a television receiver to download information specific to the type of television programming available to the receiver, the system comprising:

an electronic terminal unit including an operator input, a bidirectional modem, and a controller in communication with the operator input and the modem, the controller being programmed to perform the following functions:

a) establish a connection to a service provider through the modem,

b) receive information through the operator input pertaining to the geographic location of the television receiver,

c) transmit the information pertaining to the geographic location of the television receiver to the service provider, and

d) receive, from the service provider, the information specific to the type of television programming available to the receiver.

9. The system of claim 8, further including an electronic television interface in communication with the controller, the controller being further programmed to affect the operation of the television receiver in accordance with the information specific to the type of television programming available to the receiver.

10. The system of claim 8, further including a memory in communication with the controller for storing and retrieving the information specific to the type of television programming available to the receiver.

* * * * *

EXHIBIT B

MAIL ROOM NOV 18 1993 PAT. & TRADEMARK OFF.

5/A

IN THE UNITED STATES PATENT AND TRADEMARK OFFICE

In re application of: Levine

Serial No.: 07/848,338 Group No.: 2317 11-28-93

Filed: March 9, 1992 Examiner: S. Kim

For: PERSONAL COMPUTER BASED SCHEDULE GUIDE AND CONTROLLER FOR VIDEO RECORDER

RECEIVED NOV 22 1993 GROUP 2300

AMENDMENT

Hon. Commissioner of Patents
and Trademarks
Washington, D.C. 20231

Sir:

In response to the Office Action dated August 13, 1993, please amend the above-identified application as follows.

With regard to the filing date, the present application contains new matter relative to its parent cases, and, for this reason, is being filed as a continuation-in-part in accordance with 35 U.S.C. § 120, MPEP § 201.08, as opposed to MPEP § 201.07. As disclosed in the Background of the Invention of the present application, parent application to which the present application relates discloses a system providing a schedule of future programming available to a video recorder including a database memory so that the operator may display selected portions of the future schedule as an aid in choosing programs for recording. The present application adds to this subject matter the placement of the database memory within a general-purpose personal computer including a remote-control transmitter connected to an I/O port of the personal computer. Given the relationship and continuity between the present application and the parent application to

LAW OFFICES KRASS & YOUNG, P.C., 3001 W. BIG BEAVER ROAD, SUITE 624, TROY, MICHIGAN 48084-3109 (313) 649-3333

which it relates, Applicant believes he is entitled to the benefit of priority date under 35 U.S.C. § 120.

IN THE CLAIMS

1. (Amended) A system for programming a video recorder [of the type] having an electromagnetic remote control, for the [future,] unattended recording of programming from a video programming source connected to the video recorder, comprising:

a personal computer;

means within said personal computer for storing a database of future programming schedules including information relating to program identification and start time;

an electromagnetic radiation transmitter connected to an I/O port of the personal computer; and

an application program for the personal computer operative to cause generation of signals by said electromagnetic transmitter operative to program the video recorder to record a particular video program in accordance with information contained within said database being selected by a user of said personal computer [available to the video recorder on said source of said video programming at a particular future time].

2. (Amended) The system for programming of claim 1 wherein said personal computer includes a real time clock, and said application program includes means for comparing [the output of the] a time value generated by said real time clock with

LAW OFFICES KRASS & YOUNG, P.C., 3001 W. BIG BEAVER ROAD, SUITE 624, TROY, MICHIGAN 48084-3109 (313) 649-3333

[stored information relating to the time of the occurrence of video programming adapted to be recorded by the video recorder and means] said start time of a video program for energizing the electromagnetic transmitter for providing appropriate control signals to the video recorder at such time as the output of the real time clock coincides with said stored time of recording.

3. (Amended) The programming system [of recording] of claim 1 wherein said [video recorder] electromagnetic radiation transmitter further includes a real time clock and means for storing data relative to a program to be recorded including the start time of such program and circuitry within said [video recorder] transmitter compares the output of the real time clock with the stored start times of programs to be recorded and energizes the video recorder at the time of the occurrence of the program to be recorded.

Cancel claim 4.

5. (Amended) The programming system [of recording] of claim [4] 1 further including means for updating the database of future programming scheduling.

Claim 6, line 1, after "The" insert --programming--, and delete "of recording".

LAW OFFICES KRASS & YOUNG, P.C., 3001 W. BIG BEAVER ROAD, SUITE 624, TROY, MICHIGAN 48084-3109 (313) 649-3313

7. (Amended) The programming system [of recording] of claim 6 wherein said current schedule information is transmitted from said remote source of current schedule information via a telephone line[s].

Claim 8, ~~line~~ 1, after "The" insert --programming--, and delete "of recording".

10. (Amended) The method of programming a video recorder having an electromagnetic remote receiver to record programming available to the video recorder at a particular future time comprising:

connecting an electromagnetic transmitter to an output port of a personal computer; [and]

storing in the personal computer a database of future programming schedules; and

providing the personal computer with an application program which causes the output port to generate signals to said electromagnetic transmitter causing said video recorder to record [said] a program [at said particular future time] selected from said database by a user of said personal computer.

11. (Amended) The method of programming of claim 10 wherein said personal computer includes a real time clock and said [application program] database of future programming schedules includes [means for storing] the start time of future programs to

LAW OFFICES KRASS & YOUNG, P.C., 3001 W. BIG BEAVER ROAD, SUITE 624, TROY, MICHIGAN 48084-3108 (313) 649-3333

be recorded and the electromagnetic transmitter generates a signal to the electromagnetic receiver associated with such video recorder at such time as the output of the real time clock coincides with the start time of the program to be recorded as stored in said application program to initiate operation of the video recorder at that time.

a3

12. (Amended) The method of recording of claim 10 wherein said electromagnetic transmitter [video recorder] includes a real time clock and means for storing the start time of a video program to be recorded and said [electromechanical] electromagnetic transmitter connected to an I/O port of the personal computer transmits signals relating to a future occurring program to be recorded at such time as the operator of the computer selects the program.

Claim 13, lines 5 and 6, replace "the" (second occurrence) with --an--, and delete "of this system".

Cancel claim 15.

a4

16. (Amended) The method of recording to claim 13 wherein said personal computer includes [a memory for storing said schedule of future programs and] a database program allowing the operator to display selected portions of said schedule of future programming on the monitor of the personal computer.

LAW OFFICES KRASS & YOUNG, P.C., 3001 W. BIG BEAVER ROAD, SUITE 624, TROY, MICHIGAN 48084-3108 (313) 649-3333

Remarks

By this amendment, claims 4 and 15 have been canceled, leaving claims 1-3, 5-14 and 16-19 remaining in the application, and are presented for reconsideration in light of the remarks which follow.

Claim 1-19 were rejected under 35 U.S.C. § 112, second paragraph as being indefinite for failing to particularly point out and distinctly claim the subject matter which Applicant regards as the invention. The terms listed on page 1 of the Office Action were either deleted or clarified by this amendment, and the Applicant believes that all remaining claims, as amended, now clearly define Applicant's invention.

Claims 1-9 and 17-19 stand rejected under 35 U.S.C. § 102(b) as being anticipated by Launey (U.S. Patent 5,086,385). Launey teaches a personal computer capable of controlling multiple appliances within the home. With respect to the control of a VCR, however, the Applicant respectfully disagrees that Launey teaches the limitations of Applicant's claim 1. Firstly, Launey does not disclose how a VCR is to be controlled. Hand-held remote unit 22 in Figure 1 of the Launey patent is used only to send control signals to receiver 20 within Launey's home automation system itself. This transmitter/receiver is not capable of communicating with an external device and, as such, does not meet the limitation in the present application concerning an electromagnetic radiation transmitter connected to an I/O port of the personal computer.

Secondly, Launey does not suggest where schedule

LAW OFFICES KRASS & YOUNG, P.C., 3001 W. BIG BEAVER ROAD, SUITE 624, TROY, MICHIGAN 48084-3109 (313) 649-3333

information concerning future programming available to the VCR is to be stored. It can only be inferred from the Launey patent that such schedule information might be kept in remote database 44 and downloaded through modem 42 to central processor 10 on an as-needed basis, or is simply entered via touch-screens 16 from a printed TV guide. In any case, programming a VCR in accordance with the Launey system is essentially manual, with an operator entering the information relating to a program to be recorded. The Applicant wishes to direct the Examiner's attention to column 16, lines 34-39 in the Launey patent, which reads

> "Using a touch screen 16 or other cursor control device such as a mouse or light pen, the user can dynamically select and/or move graphics elements to indicate a date and time to start and stop any action the home automation system is capable of performing."

Additionally, column 17, lines 24-39 explain that

> "All of the functions which can be remotely controlled on a VCR, in addition to scheduling the VCR, can be controlled from the VCR touch screen of Figure 3C, ... the user can schedule the VCR to operate and record at a predetermined time. By selecting the VCR scheduling function, the scheduling screen shown in Figures 10A-10D would appear on the touch screen for the user to schedule the VCR event."

In contrast, the present invention maintains a database including information relating to programming available to the VCR during a future period, including program identification, start time and so forth. This information may be derived from a remote database via telephonic communication, by broadcast, or by

LAW OFFICES KRASS & YOUNG, P.C., 3001 W. BIG BEAVER ROAD, SUITE 624, TROY, MICHIGAN 48084-3108 (313) 649-3333

subscription provision of disposable memories. In all cases, however, an entire block of schedule information for a given period of time is transferred to the personal computer in accordance with the present invention, thereby enabling an operator to perform database-type manipulations directly on this information, including its use to immediately schedule a particular video program for future recording.

Claims 1 and 10 have been amended to include means within the personal computer for storing a database of future programming schedules. These limitations were previously recited by claims 4 and 15, now canceled. The Applicant respectfully submits that this database, in combination with the electromagnetic radiation transmitter already recited, distinguish claims 1 and 10 over the prior art, including the Launey patent.

With regard to claims 2 and 11, Launey does not teach means necessary to send instructions to a remote controller in order to program a VCR. Column 8, lines 25-30 of the Launey patent, cited by the Examiner, read as follows:

> "A receiver for a hand-held remote control unit may also be connected to the serial interface 14 so that the user may be provided with a hand-held infrared, RF or other type of remote 20 for commanding the central processor to perform the various available tasks."

This simply means that Launey's expandable home automation system may be remote controlled; it doesn't mean that the Launey system can control an external piece of hardware, such as a VCR.

LAW OFFICES KRASS & YOUNG, P.C., 3001 W. BIG BEAVER ROAD, SUITE 624, TROY, MICHIGAN 48084-3109 (313) 649-3333

With regard to claims 3 and 12, a mistake was made in the original drafting of these claims. Instead, of the video recorder including the real-time clock and means for storing the start time of the video program to be recorded, it is the electromagnetic transmitter connected to the I/O port of the personal computer which contains the real-time clock and associated storage unit so that, once programmed, the main personal computer need not remain energized in order for a particular program to be recorded on an unattended basis. Support for this claim is contained in the original specification on page 8, lines 14-26.

With regard to claim 6, Launey does not teach the limitations of this claim. Although it is conceded that the Launey system includes a serial interface which may be connected to a remote database, no suggestion is made that this remote database contains program schedule information. The Launey patent only suggests the retrieval of weather reports, financial reports or sports reports. (See column 21, lines 22-24 of the Launey patent.) As mentioned previously, it can only be presumed that the Launey system is capable of accessing video program schedule information stored within a remote database. In actuality, an operator of the Launey system probably programs the VCR using the touch screen in conjunction with a printed TV guide, though, in any case, Launey does not disclose how a VCR would or could be programmed using the system described in the issued patent.

Claims 10-16 stand rejected under 35 U.S.C. § 103 as

LAW OFFICES KRASS & YOUNG, P.C., 3001 W. BIG BEAVER ROAD, SUITE 624, TROY, MICHIGAN 48084-3108 (313) 649-3333

being obvious over the teachings of Launey. According to the Examiner, it would have been obvious to a person of ordinary skill in the art at the time the invention was made to implement the method of claim 10-16. With regard to claim 10, it is stated on page 5 of the Office Action that "one would have been motivated to program the central processor for sending commands to the hand-held remote for sending commands to the programmable VCR to program a future event". The Applicant respectfully disagrees, first, because Launey does not teach a bidirectional hand-held remote unit capable of receiving commands from the central processor. Even if it included such a facility, if the Examiner is suggesting that the hand-held remote receive commands from the central processor then somehow re-broadcast these commands to program a VCR, this configuration bears no resemblance to the present application. Similarly, regarding claim 11, the Examiner states "One would have been motivated to use a value of a real-time clock for sending said value to the hand-held remote control before programming the VCR accordingly to said value of a real-time clock." Again, Launey does not teach the ability to transmit anything to an external device, including the hand-held remote unit associated with its system. For the same reason, with regard to claim 12, it would not have been obvious for Launey to send information or central processor 10 relating to the real-time data to the hand-held remote control.

In summary, Launey does not teach or in any way suggest the hardware necessary to execute the functions claimed in the

LAW OFFICES KRASS & YOUNG, P.C., 3001 W. BIG BEAVER ROAD, SUITE 624, TROY, MICHIGAN 48084-3109 (313) 649-3333

present application. With regard to the § 103 rejections, obviousness cannot be established by the teachings of the prior art to produce the claimed invention, absent some teaching, suggestion or incentive supporting the basis for a rejection. "Obvious to try" is not the standard under which a claim may be rejected under 35 U.S.C. § 103. As such, in light of the foregoing amendments and comments, the Applicant respectfully submits that all claims are now in condition for allowance, and requests timely notice thereof.

Respectfully submitted,

By: _____
John G. Posa
Reg. No. 37,424

Dated: Nov. 15, 1993

LAW OFFICES KRASS & YOUNG, P.C., 3001 W. BIG BEAVER ROAD, SUITE 624, TROY, MICHIGAN 48084-3108 (313) 649-3333