UNITED STATES DEPARTMENT OF COMMERCE
Patent and Trademark Office
Address: COMMISSIONER OF PATENTS AND TRADEMARKS
Washington, D.C. 20231

SERIAL NUMBER	FILING DATE	FIRST NAMED APPLICANT		ATTORNEY DOCKET NO.
07/848,339	03/09/92	LEVINE	M	LVN-017

B3M1/0929

ALLEN M. KRASS
KRASS AND YOUNG
3001 W. BIG BEAVER, STE. 624
TROY, MI 48084-3109

KIM, S EXAMINER	
ART UNIT	PAPER NUMBER
2317	11

DATE MAILED: 09/29/94

NOTICE OF ABANDONMENT

This application is abandoned in view of:

1. ☒ Applicant's failure to respond to the Office letter, mailed 5/23/94.
2. ☐ Applicant's letter of express abandonment which is in compliance with 37 C.F.R. 1.138.
3. ☐ Applicant's failure to timely file the response received _____ within the period set in the Office letter.
4. ☐ Applicant's failure to pay the required issue fee within the statutory period of 3 months from the mailing date of _____ of the Notice of Allowance.
   - ☐ The issue fee was received on _____.
   - ☐ The issue fee has not been received in Allowed Files Branch as of _____.

   In accordance with 35 U.S.C. 151, and under the provisions of 37 C.F.R. 1.316(b), applicant(s) may petition the Commissioner to accept the delayed payment of the issue fee if the delay in payment was unavoidable. The petition must be accompanied by the issue fee, unless it has been previously submitted, in the amount specified by 37 C.F.R. 1.17 (l), and a verified showing as to the causes of the delay.

   If applicant(s) never received the Notice of Allowance, a petition for a new Notice of Allowance and withdrawal of the holding of abandonment may be appropriate in view of Delgar Inc. v. Schuyler, 172 U.S.P.Q. 513.
5. ☐ Applicant's failure to timely correct the drawings and/or submit new or substitute formal drawings by _____ as required in the last Office action.
   - ☐ The corrected and/or substitute drawings were received on _____.
6. ☐ The reason(s) below.

THOMAS C. LEE
SUPERVISORY PATENT EXAMINER
GROUP 220

PTO-1432 (REV. 5-93)

UNITED STATES DEPARTMENT OF COMMERCE
Patent and Trademark Office
Address: COMMISSIONER OF PATENTS AND TRADEMARKS
Washington, D.C. 20231

APPLICATION NUMBER	FILING DATE	FIRST NAMED APPLICANT	ATTORNEY DOCKET NO.
08/287,343	08/08/94	LEVINE	M LVN067

B3M1/1202

BIFFORD, KRASS, GROH, SPRINKLE, PATMORE, ANDERSON & CITKOWSKI, P.C.
200 N. WOODWARD AVE., SUITE 400
BIRMINGHAM MI 48009

EXAMINER	
KIM, K	
ART UNIT	PAPER NUMBER
2317	8

DATE MAILED: 12/02/96

This is a communication from the examiner in charge of your application.
COMMISSIONER OF PATENTS AND TRADEMARKS

OFFICE ACTION SUMMARY

☒ Responsive to communication(s) filed on 9/6/96

☐ This action is FINAL.

☐ Since this application is in condition for allowance except for formal matters, prosecution as to the merits is closed in accordance with the practice under *Ex parte Quayle*, 1935 D.C. 11; 453 O.G. 213.

A shortened statutory period for response to this action is set to expire -3- month(s), or thirty days, whichever is longer, from the mailing date of this communication. Failure to respond within the period for response will cause the application to become abandoned. (35 U.S.C. § 133). Extensions of time may be obtained under the provisions of 37 CFR 1.136(a).

Disposition of Claims

☒ Claim(s) 1-18 is/are pending in the application.

Of the above, claim(s) _____ is/are withdrawn from consideration.

☐ Claim(s) _____ is/are allowed.

☒ Claim(s) 1-18 is/are rejected.

☐ Claim(s) _____ is/are objected to.

☐ Claims _____ are subject to restriction or election requirement.

Application Papers

☐ See the attached Notice of Draftsperson's Patent Drawing Review, PTO-948.

☐ The drawing(s) filed on _____ is/are objected to by the Examiner.

☐ The proposed drawing correction, filed on _____ is ☐ approved ☐ disapproved.

☐ The specification is objected to by the Examiner.

☐ The oath or declaration is objected to by the Examiner.

Priority under 35 U.S.C. § 119

☐ Acknowledgement is made of a claim for foreign priority under 35 U.S.C. § 119(a)-(d).

☐ All ☐ Some* ☒ None of the CERTIFIED copies of the priority documents have been

☐ received.

☐ received in Application No. (Series Code/Serial Number) _____.

☐ received in this national stage application from the International Bureau (PCT Rule 17.2(a)).

*Certified copies not received: _____

☐ Acknowledgement is made of a claim for domestic priority under 35 U.S.C. § 119(e).

Attachment(s)

☒ Notice of Reference Cited, PTO-892

☐ Information Disclosure Statement(s), PTO-1449, Paper No(s). _____

☐ Interview Summary, PTO-413

☐ Notice of Draftsperson's Patent Drawing Review, PTO-948

☐ Notice of Informal Patent Application, PTO-152

– SEE OFFICE ACTION ON THE FOLLOWING PAGES –

Part III. DETAILED ACTION

1. This Office Action is responsive to amendment filed on September 6, 1996.

2. Claims 1-18 are presented for examination.

Claim Objections

3. Claim 14 is objected to because of the following informalities:

The claim has a missing term after the phrase "the memory within the" on line 1.

Appropriate correction is required.

Response to Arguments

4. Applicant's arguments with respect to claims 1-18 have been considered but are moot in view of the new ground(s) of rejection.

Claim Rejections - 35 USC § 103

5. The text of those sections of Title 35, U.S. Code not included in this action can be found in a prior Office Action.

6. Claims 1-2 , 7-12 and 14-18 are rejected under 35 U.S.C. 103(a) as being unpatentable over Yuen et al., US Patent 5,307,173 in view of Kinghorn, US Patent 4,908,707.

As to claims 1 and 2, Yuen teaches a system for unattended recording of a video program by a remotely controlled video recorder connected to a video source, (Abstract, Fig. 19 and Fig. 21) comprising: a computer (Fig. 21,#380 or Fig. 30) having a display (Fig. 21, #384) and a memory (Fig. 21, ROM and RAM) to receive and store the schedule (Abstract and Col. 2, lines 26-53), an I/O port to which the electronic module is connected (Fig. 21), and an electronic module including: means for receiving and storing programming information (Fig. 12, specifically #76, Col. 19, lines 41-61), a memory for storing remote control codes (Fig. 4, #62, Col. 9, lines 7-34), and a wireless remote control transmitter (Fig. 31, #962, Fig. 4 and Col. 8, lines 7-25).

Yuen does not teach that the video programming schedule is received from the source, but teaches that the user manually enters the codes from a listings in a schedule guide publication, or that the user makes a selection from a listing displayed by a resident application program of the computer.

Kinghorn discloses a system for receiving the programming schedule from the source (Abstract). Kinghorn further teaches that the received programming schedule information packets are processed at the user location where user chooses particular program to record (Col. 2, lines 27-48). It should be noted that the system disclosed by Kinghorn can be easily incorporated into the teachings of Yuen to achieve a seamless system without requiring any inventive activities since the information packets in Kinghorn's system includes the

programming codes which required manual entry of in Yuen's system, and thus automate Yuen's system further.

As to claim 7 and 15-16, both Yuen and Kinghorn teaches that the programming information includes the numeric programming codes (Yuen, "G-Code", Fig. 8, Col. 16, lines 29-52, Kinghorn, Abstract, Fig. 2 and Col. 2, lines 21-26)

As to claims 8 and 14, Yuen teaches the "learn and store" function of the module (Col. 9, lines 7-34). Please note that the examiner interprets claim 14 to mean "the memory within the module" since the claim has an incomplete language.

As to claim 9, Yuen and Kinghorn in combination teaches the invention substantially as claimed as discussed above in discussing claim 1. Yuen further shows a remotely controllable cable box (Fig. 35, #966) which inherently has a multi-channel tuner as it is well known in the art. Yuen further teaches that the module stores the programming information and compares its clock with time specified in the information to activate the video recorder when the time matches (Fig. 25, Col. 6, line 67 - Col. 7, line 8).

As to claims 10-12 and 18, Yuen further teaches in Figure 35 that system can include a cable box and a VCR. It is well known in the art that both the cable box and the VCR include multi-channel tuners.

As to claim 17, all limitations cited in claim 17 were taught by the two references, Yuen and Kinghorn in combination, as discussed above.

It would have been obvious to one of ordinary skill in the art at the time the invention was made to combine the teachings of Yuen and Kinghorn as both references are directed to an analogous art, and as both references are in the same field of endeavor of automation of programming of recording of future TV or cable programming by a VCR and in the same problem solving area of simplifying programming of VCR, and to improve upon the system taught by Yuen by relieving the user from having to manually key in the programming codes (Kinghorn, Col. 1, lines 10-17).

7. Claims 3-6 and 13 are rejected under 35 U.S.C. 103(a) as being unpatentable over Yuen in view of Kinghorn of as applied to claims 1-2, 7-12 and 14-18 above, and further in view of Palazzi, III et al., US Patent 5,327,554.

Yuen and Kinghorn in combination teach the invention substantially as claimed as discussed in paragraph 6 of this action.

Yuen and Kinghorn, individually or in combination, fail to teach the use of sound detector or an acoustic coupler as a means of communication between the computer and the module.

Palazzi teaches a system where telephone line to computer interface is facilitated by a use of an acoustic coupler (Fig. 1, "wireless link" from the phone line #1, Col. 4, line 67 - Col. 5, line 1). Applicant has not particularly defined the sound detecting means other than the acoustic coupler either in the claim or in the specification. Examiner takes an official notice that the acoustic coupler is an well known form of sound detecting means, and it thus constitute a "sound

detecting means" as applied to claims 3-6. Further, applicant admits that the use of the acoustic coupler in programming VCRs via telephone is known in connection with discussion of VCRPlus[2] in his specification, page 13, lines 21-27).

It would have been obvious to one of ordinary skill in the art at the time the invention was made to facilitate the communication between the computer and the module as taught by Yuen and Kinghorn through acoustic coupler as taught by Palazzi to allow the user to program the VCR from a remote telephone Palazzi (Col. 1, lines 24-56). All of the references are in an analogous art of facilitating programming of recording of broadcast programming by a VCR. Inasmuch as the applicant's own motivation appears to be to facilitate remote communication via telephone (applicant's specification page 12, line 5 - page 13, line 27), that motivation is taught by Palazzi.

Conclusion

8. The prior art made of record and not relied upon is considered pertinent to applicant's disclosure.

U.S. Patent:	Issued:	Inventor:	Filed:
5,179,439	Jan 1993	Hashimoto	Aug 1990
4,540,851	Sep 1985	Hashimoto	Dec 1983
5,412,377	May 1995	Evans et al.	Feb 1994
4,825,200	Apr 1989	Evans et al.	Jun 1987
5,260,788	Nov 1993	Takano et al.	Nov 1991
5,390,027	Feb 1995	Henmi et al.	Jul 1993
5,353,121	Oct 1994	Young et al.	Mar 1993
5,151,789	Sep 1992	Young et al.	Oct 1991

	5,479,266	Dec 1995	Young et al.	Jun 1995
	5,479,268	Dec 1995	Young et al.	Feb 1994
	5,532,754	Jul 1996	Young et al.	Apr 1994
	5,412,720	May 1995	Hoarty	May 1992
	5,038,211	Aug 1991	Hallenbeck	Jul 1989
	4,807,052	Feb 1989	Amano	Oct 1987
	4,751,578	Jun 1988	Reiter et al.	May 1988
	4,598,288	Jul 1986	Yarbrough et al.	Dec 1983
	4,641,205	Feb 1987	Beyers, Jr.	Mar 1984
	5,400,246	Mar 1995	Wilson et al.	Aug 1992
	5,095,424	Mar 1992	Woffinden et al	Jul 1989

9. Any inquiry concerning this communication or earlier communications from the examiner should be directed to Ki Kim whose telephone number is (703) 305-3872. The examiner can be normally be reached Monday through Friday from 7:00 AM to 4:00 PM.

If attempts to reach the examiner by telephone are unsuccessful, the Examiner's supervisor, Thomas C. Lee, can be reached at (703) 305-9717. The fax number for this Group is (703) 308-5359.

Any inquiry of a general nature or relating to the status of this application should be directed to the Group receptionist whose telephone number is (703) 305-9600.

THOMAS C. LEE
SUPERVISORY PATENT EXAMINER
230

Ki Kim
November 22, 1996

Interview Summary

Application No.	Applicant(s)
08/287,343	Levine
Examiner	**Group Art Unit**
KI Kim	2317

All participants (applicant, applicant's representative, PTO personnel):

(1) *Ki Kim (PTO Examiner)*
(2) *Thomas C. Lee (PTO SPE 2317)*
(3) *John G. Posa (Attorney Of Record For Applicant)*
(4)

Date of Interview *Apr 15, 1997*

Type: ☐ Telephonic ☒ Personal (copy is given to ☐ applicant ☒ applicant's representative).

Exhibit shown or demonstration conducted: ☐ Yes ☒ No. If yes, brief description:

Agreement ☒ was reached. ☐ was not reached.

Claim(s) discussed: *Claims 1, 9 and 17.*

Identification of prior art discussed:
Yuen et al. (US 5,307,173), Young et al. (US 5,479,268), Mankovitz et al. (US 5,515,173) and Jacobs et al., (US 5,488,571)

Description of the general nature of what was agreed to if an agreement was reached, or any other comments:
Attorney for the Applicant argued, and both the Examiners agreed, that previously cited reference, Yuen et al., on which the previous rejection of the independant claims was based, fails to teach the downloading of the schedule information by the PC and further downloading the same to a separate module for controlling the VCR as recited by the claims.

(A fuller description, if necessary, and a copy of the amendments, if available, which the examiner agreed would render the claims allowable must be attached. Also, where no copy of the amendents which would render the claims allowable is available, a summary thereof must be attached.)

1. ☒ It is not necessary for applicant to provide a separate record of the substance of the interview.

Unless the paragraph above has been checked to indicate to the contrary, A FORMAL WRITTEN RESPONSE TO THE LAST OFFICE ACTION IS NOT WAIVED AND MUST INCLUDE THE SUBSTANCE OF THE INTERVIEW. (See MPEP Section 713.04). If a response to the last Office action has already been filed, APPLICANT IS GIVEN ONE MONTH FROM THIS INTERVIEW DATE TO FILE A STATEMENT OF THE SUBSTANCE OF THE INTERVIEW.

2. ☐ Since the Examiner's interview summary above (including any attachments) reflects a complete response to each of the objections, rejections and requirements that may be present in the last Office action, and since the claims are now allowable, this completed form is considered to fulfill the response requirements of the last Office action. Applicant is not relieved from providing a separate record of the interview unless box 1 above is also checked.

230

Examiner Note: You must sign and stamp this form unless it is an attachment to a signed Office action.

U.S. Patent and Trademark Office
PTO-413 (Rev. 10-95) Interview Summary Paper No. 9

US005692214A

United States Patent [19]

Levine

[11] Patent Number: 5,692,214

[45] Date of Patent: Nov. 25, 1997

[54] **SYSTEM FOR UNATTENDED RECORDING OF VIDEO PROGRAMS BY REMOTE CONTROL CODE TRANSMITTER MODULE WHICH RECEIVES USER SELECTIONS FROM A PERSONAL COMPUTER**

[76] Inventor: **Michael R. Levine**, 2122 NW. 60th Cir., Boca Raton, Fla. 33496

[21] Appl. No.: 287,343

[22] Filed: Aug. 8, 1994

Related U.S. Application Data

[63] Continuation-in-part of Ser. No. 848,338, Mar. 9, 1992, abandoned, which is a continuation-in-part of Ser. No. 802,249, Dec. 4, 1991, abandoned, which is a continuation-in-part of Ser. No. 796,702, Nov. 21, 1991, abandoned, which is a continuation-in-part of Ser. No. 595,393, Oct. 10, 1990, abandoned, which is a continuation of Ser. No. 484,175, Feb. 23, 1990, Pat. No. 4,963,994, which is a continuation of Ser. No. 213,162, Jun. 29, 1988, Pat. No. 4,908,713, which is a continuation of Ser. No. 634,179, Jul. 24, 1984, abandoned, which is a continuation of Ser. No. 330,111, Dec. 14, 1981, abandoned.

[51] Int. Cl.[6] G06F 13/00

[52] U.S. Cl. 395/833; 395/200.09; 395/327; 395/352; 395/557; 395/527; 395/610; 364/705.05; 348/906; 345/169; 358/335

[58] Field of Search 395/825, 826, 395/828, 600, 200.09, 327, 352, 557, 610, 883; 358/335, 142; 340/825; 364/705.05; 345/169; 348/906

[56] **References Cited**

U.S. PATENT DOCUMENTS

4,540,851	9/1985	Hashimoto	179/2 A
4,566,034	1/1986	Harger et al.	358/194.1
4,598,288	7/1986	Yarbrough et al.	340/825
4,641,205	2/1987	Beyers, Jr.	360/33.1
4,751,578	6/1988	Reiter et al.	358/183
4,807,052	2/1989	Amano	358/194.1
4,825,200	4/1989	Evans et al.	341/23
4,908,707	3/1990	Kinghorn	358/147
4,908,713	3/1990	Levine	358/335
5,038,211	8/1991	Hallenbeck	358/142
5,086,385	2/1992	Launey et al.	364/188
5,151,789	9/1992	Young	358/194.1
5,179,439	1/1993	Hashimoto	358/86
5,260,788	11/1993	Takano et al.	358/142
5,307,173	4/1994	Yuen et al.	358/335
5,327,554	7/1994	Palazzi, III et al.	395/600
5,353,121	10/1994	Young et al.	348/563
5,390,027	2/1995	Henmi et al.	358/335
5,400,246	3/1995	Wilson et al.	364/146
5,412,377	5/1995	Evans et al.	340/825
5,412,720	5/1995	Hoarty	380/15
5,479,266	12/1995	Young et al.	358/335
5,479,268	12/1995	Young et al.	358/335
5,532,754	7/1996	Young et al.	348/569

FOREIGN PATENT DOCUMENTS

0493099 1/1992 European Pat. Off. .

Primary Examiner—Thomas C. Lee
Assistant Examiner—Ki S. Kim
Attorney, Agent, or Firm—Gifford, Krass, Groh, Sprinkle, Patmore, Anderson & Citkowski, PC

[57] **ABSTRACT**

A personal computer is used to assist in the selection of television programs to be recorded at future times and to control a video tape recorder to implement the selected recordings. An application program allows the computer to receive data representing a schedule of future programs. The operator can perform data base operations on the data to obtain listings of programs of particular interest. A program to be recorded is selected by moving a cursor into position with the display of the program listing on the computer. An output device generates infrared signals to control the video tape recorder and a cable box to tune and record a selected program.

23 Claims, 3 Drawing Sheets

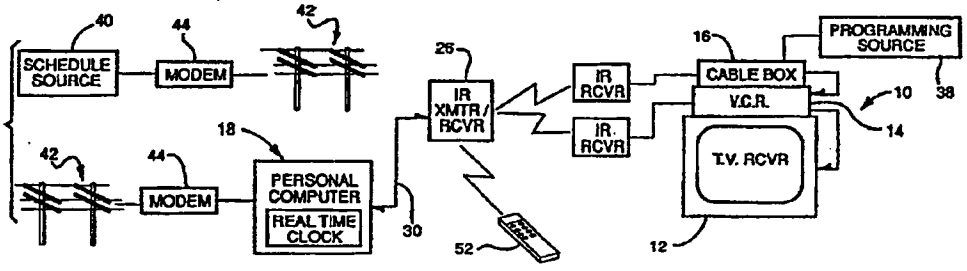

www.freepatentsonline.com

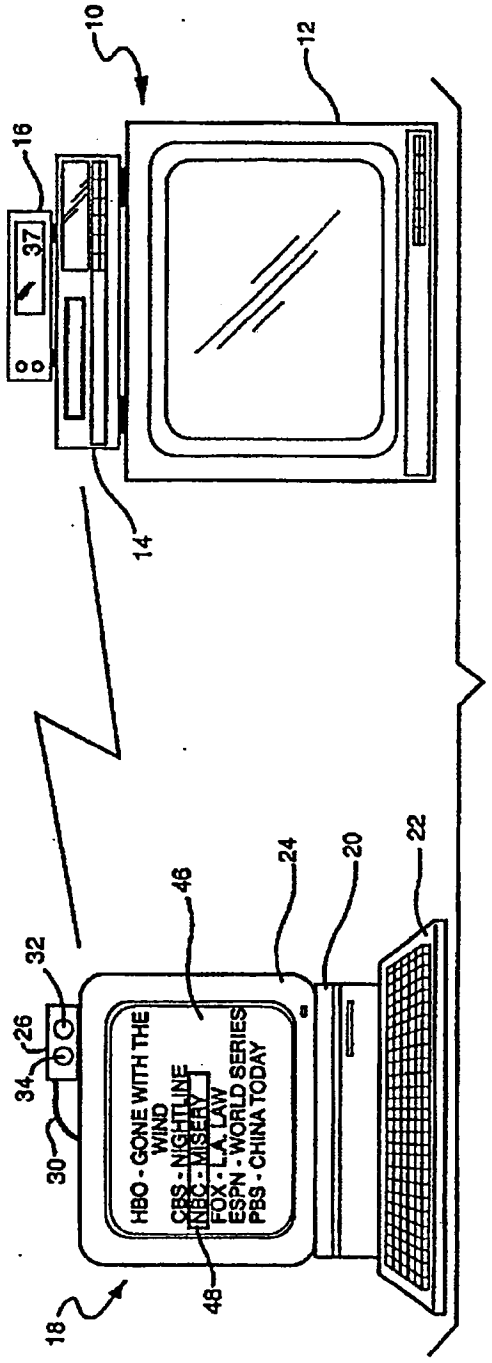

FIG - 1

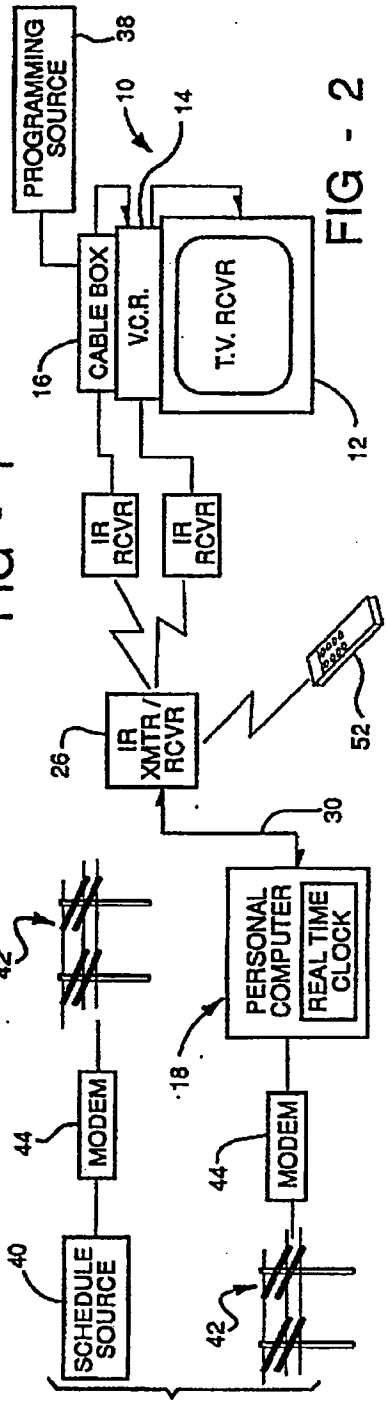

FIG - 2

www.freepatentsonline.com

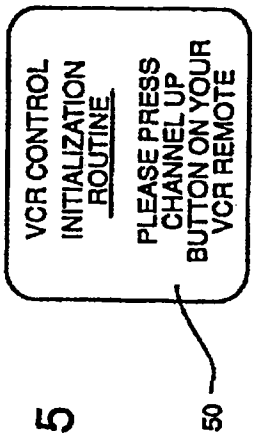

FIG - 5

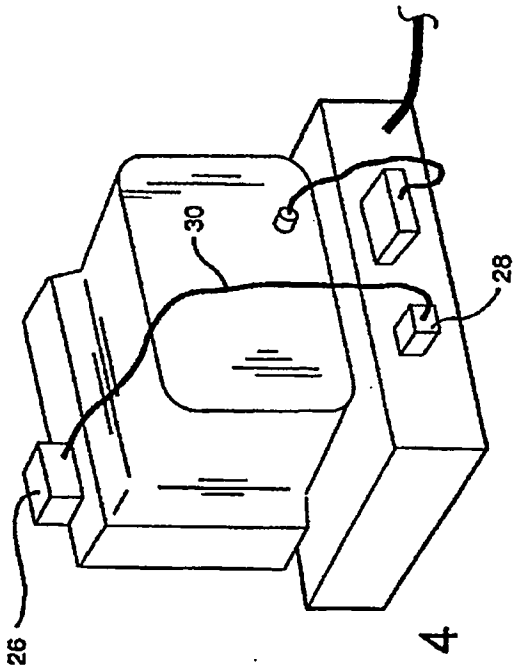

FIG - 4

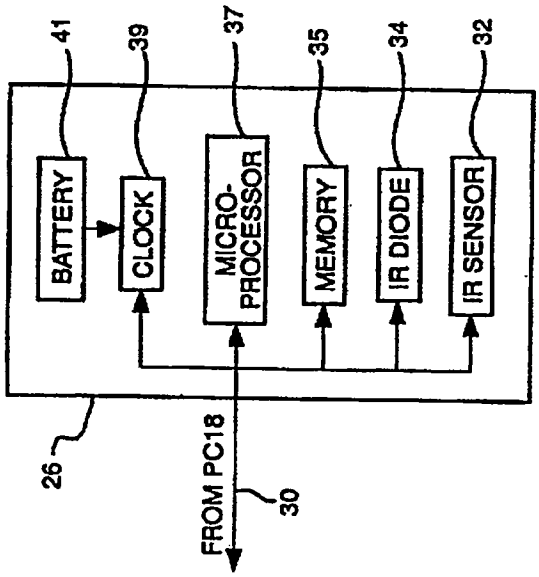

FIG - 3

www.freepatentsonline.com

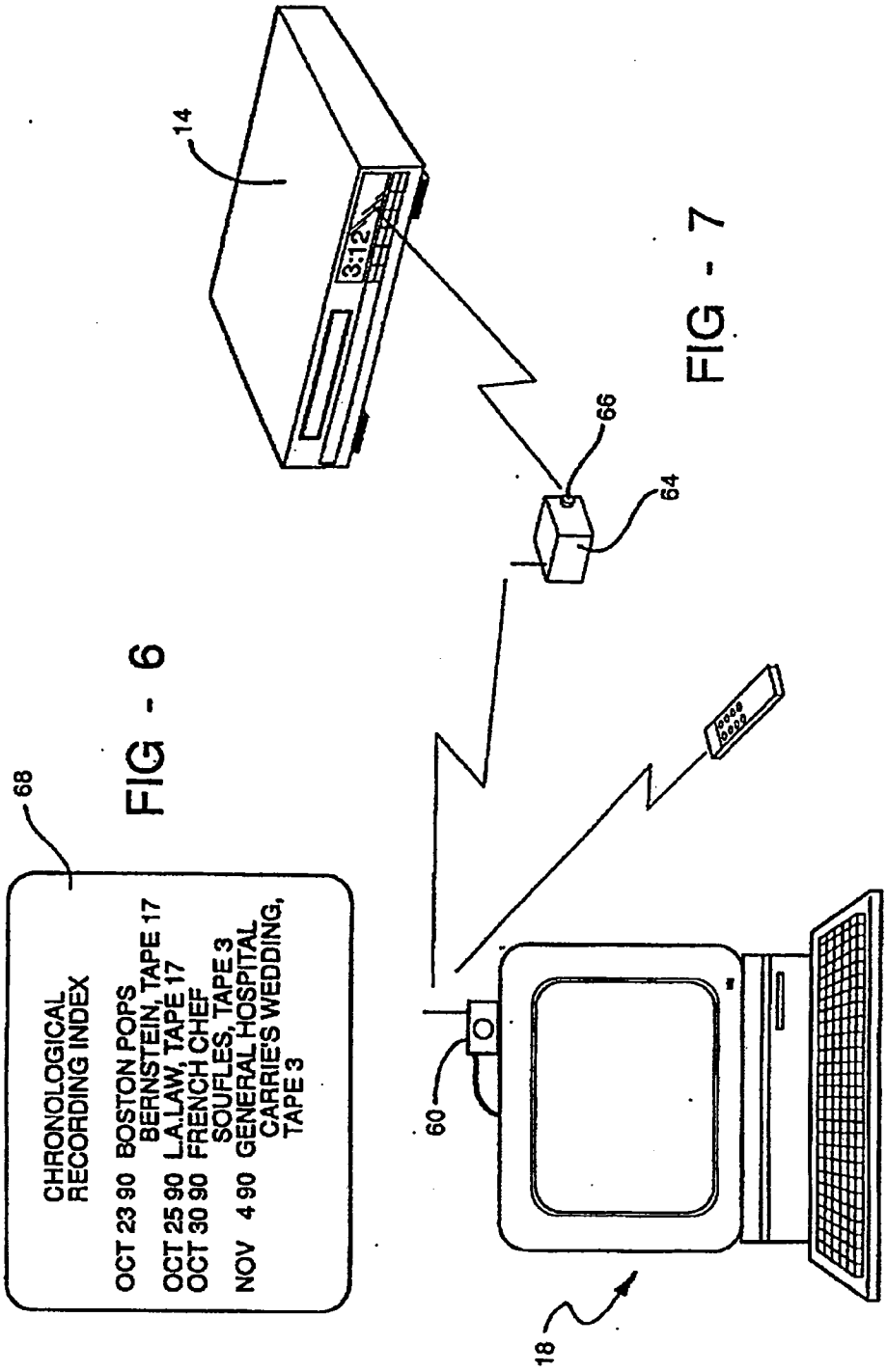

FIG - 7

FIG - 6

www.freepatentsonline.com

SYSTEM FOR UNATTENDED RECORDING OF VIDEO PROGRAMS BY REMOTE CONTROL CODE TRANSMITTER MODULE WHICH RECEIVES USER SELECTIONS FROM A PERSONAL COMPUTER

RELATED APPLICATIONS

This is a continuation-in-part of Ser. No. 07/848,338, filed Mar. 9, 1992 now abandoned, which is a continuation-in-part of Ser. No. 07/802,249, filed Dec. 4, 1991 (now abandoned), which is a continuation-in-part of Ser. No. 07/796,702, filed Nov. 21, 1991 now abandoned, which is a continuation-in-part of Ser. No. 07/595,393, filed Oct. 10, 1990 now abandoned, which is a continuation of Ser. No. 07/484,175, filed Feb. 23, 1990, (now U.S. Pat. No. 4,963,994), which is a continuation of Ser. No. 07/213,162, filed Jun. 29, 1988. (now U.S. Pat. No. 4,908,713) which is a continuation of Ser. No. 06/634,179 filed Jul. 4, 1984 (now abandoned), which is a continuation of Ser. No. 06/330,111, filed Dec. 14, 1981 (now abandoned).

FIELD OF THE INVENTION

This invention relates to a method and apparatus for controlling a video recorder to allow the unattended recording of future occurring programs using a personal computer and more particularly to such a method and apparatus which provides a display of a schedule of future programming available to the recorder on the personal computer.

BACKGROUND OF THE INVENTION

My U.S. Pat. No. 4,908,713 discloses a system for providing a schedule of future video programming available to a video recorder to a database memory located at the recorder so that the operator may display selected sections of the future schedule as an aid in choosing programs for recording. The schedule may be provided to the memory and updated either by broadcasting schedule information or by delivering disposable memories to the system on a subscription basis. Other of my applications disclose such systems in which the video recorder is programmed for unattended recording of a future program by simply pointing a cursor at the listing of that program on the schedule display. Since the system already stores the data required to record the program, it is unnecessary for the operator to re-enter the same data. My application Ser. No. 802,249 further discloses such a system in which the local memory stores the identification of programs that have been recorded and allows their display in order to select previously recorded programs for viewing.

These systems greatly simplify the problems of selecting programs for recording, actually performing the recording process, and viewing recorded programs. They suffer from the disadvantage of adding hardware and software to existing video cassette recorders or cable boxes which do not contain a schedule memory and a database program for selecting particular entries on the memory for display.

SUMMARY OF THE INVENTION

The present invention allows the implementation of the electronic schedule memory and cursor-based programming on a conventional video recorder through use of an associated personal computer which communicates with the video recorder via infrared signals of the type used for remote control of the video recorder. The infrared signals are preferably generated by a transmitter connected to an output port of the personal computer and are driven by signals generated by an application program run by the personal computer. The same transmitter may control the tuner of an associated cable box.

Future programming schedule information may be provided to the personal computer from a remote database by telephonic communication, by broadcast, or by subscription provision of disposable memories. The schedule information may be displayed on the monitor of the personal computer under control of a database program allowing chronological, alphabetical or topical selection and the operator may move a cursor on the display screen to point to a particular program to select it for future recording. The remote transmitter connected to the personal computer output port can send signals to the video recorder at the time the selection is made, allowing the future unattended programming memory of the video recorder to initiate the recording of a specific channel at the proper time or the remote may exercise control over the video recorder at the time the recording is to be made.

The personal computer transmitter may be instructed as to the particular code systems used by the video recorder remote control either by information transmitted from a remote database provider based on the identification of the make of the video recorder by the computer use, or through use of an initialization program which displays commands to the computer operator on the monitor of the personal computer directing the operator to press selected buttons on the remote transmitter provided with the video recorder. The computer program thus learns and stores the required remote codes. In the same manner, the personal computer can control an associated cable tuner to ensure that the channel specified for recording is provided to the VCR. The personal computer program can also store and display an index of programming that has been recorded by the system.

Through use of the method and apparatus of the present invention the advantages of an electronic schedule guide and cursor-controlled programming of the video recorder may be achieved without the provision of a specialized form of cassette recorder or cable box.

Other objectives, advantages and applications of the present invention will be made apparent by the following detailed description of the preferred embodiment of the invention. The description makes reference to the accompanying drawings in which:

DETAILED DESCRIPTION OF THE DRAWINGS

FIG. 1 illustrates a personal computer and television viewing system including a TV receiver, a video recorder and a cable box, implementing the preferred embodiment of the present invention;

FIG. 2 is a schematic diagram of the preferred embodiment of the invention;

FIG. 3 is a schematic diagram of the IR transmitter/receiver;

FIG. 4 is a perspective view of the rear of a personal computer illustrating the method of attachment of an infrared transmitter and receiver to an I/O port of the computer;

FIG. 5 is an illustration of a screen displayed on the personal computer monitor during an initialization procedure; and

FIG. 6 is an illustration of a personal computer screen displaying an index of recorded programs and the tape cassettes on which each is recorded; and

FIG. 7 is an illustration of a second embodiment of the invention in which the personal computer and video recorder

www.freepatentsonline.com

are located remotely from one another and the output signals from the personal computer are transmitted by radio to an infrared transmitter for control of the video recorder.

DETAILED DESCRIPTION OF THE PREFERRED EMBODIMENT

Referring to FIG. 1, the preferred embodiment of the invention employs a television recording and receiving system, generally indicated at 10, comprising a conventional television receiver 12, a video cassette recorder 14 and a cable tuner and descrambler box 16. A variety of known forms of interconnection can be made between the cable box 16, the recorder 14 and the television receiver 12 to allow either the recording or viewing of programs tuned by the cable box 16 or the simultaneous viewing of one program and the recording of another. The present invention is equally applicable to broadcast receiver systems which do not employ a cable box and to satellite receivers.

The video recorder 14 will normally be of the type employing an infrared remote control (not shown) as will the tuner in the cable box 16. The VCR 14 may, but need not necessarily, incorporate a future, unattended recording memory which includes a real time clock (not shown).

The method and apparatus of the present invention further utilizes a conventional personal computer, generally indicated at 18, incorporating a main computer housing 20, a keyboard 22 and a monitor 24. The term "personal computer" is used broadly to incorporate work stations, minicomputers and portable units.

The personal computer 18 is conventional but is provided with a special application program to implement the present invention. The organization of this application program is well within the skill of a programmer using the functional description of the program provided herein.

An infrared transmitter and receiver 26 is connected to an I/O port of the personal computer, preferably a parallel port, by a male connector 28 and a cable 30. The infrared unit 26 incorporates a conventional infrared signal detector 32 and an infrared emitter 34. In alternative embodiments the signals could represent other forms of electromagnetic or supersonic transmission, "infrared" is hereinafter used to define the generic form of signals.

The infrared signals emitted by the unit 26 are picked up by the infrared remote receiver of the video recorder 14 and may also be picked up by the infrared recorder of the cable box 16 to control its tuner.

The application program is loaded into the personal computer via a diskette or the like. The program requires as data the schedule of future programming available to the system 10 from a programming source 38, such as a cable or the like, for a particular period of time such as a week or month.

In the preferred embodiment of the invention the schedule information is provided to the personal computer 18 from a remote database 40, which may constitute a database provider such as "COMPUSERVE," "PRODIGY" or the like. This information may be customized for the cable service 38 available to the system through an initialization routine in which the computer operator keys in the postal ZIP code of his location and, if necessary, an identification of the cable service provider. The head end database uses this information to provide the computer 18 with the schedule of programming for that service. The operator of the personal computer system 18 may communicate with the schedule source over phone lines 42 using modems 44 at each end. Alternatively, the personal computer could employ a program in which the system automatically communicates with the schedule source 40 at predetermined periods, such as each morning at 4:00 a.m. or the like, to update the schedule stored in the personal computer 18. As another alternative, diskettes could mailed out to the personal computer on a subscription basis or the schedule information could be provided to the personal computer via cablecast or broadcast.

Through use of a database program employing menus, submenus and the like, the operator may obtain a display of programming for a particular period of time, such as that illustrated at 46 in FIG. 1. To select a listed program for future recording the operator may move a cursor 48 into super-position with the listing. Alternatively, two or three digit numbers could be associated with each listing and the operator could signal a programming selection by hitting an appropriate number on the keyboard 22.

In the preferred embodiment of the invention this selection transfers information relating to the programming selection to a memory 35 within the IR unit 26 (FIG. 3). The unit 26 also includes a microprocessor 37, a real time clock 39 and a power supply battery 41. The microprocessor 37 continually compares the present time signal from the clock 39 with the start time of the programs to be recorded as stored in the memory 35 and sends an appropriate infrared code to the VCR 14 (and, if appropriate, the cable box 16) at the start time. A similar signal at the programmed conclusion time of the program terminates the recording. This arrangement eliminates the need for the computer to continually remain in the on state.

In alternative embodiments of the invention employing programmable cable tuners or programmable satellite receivers, the infrared transmissions could be used to program these units.

Alternatively, the control signals to the IR unit 26 may be provided in real time by the computer 18 under control of its internal clock. The IR unit might then simply consist of an IR diode connected to the personal computer 18 by a long wire so the diode may be placed near the receiver 10. At the time the recording is to be initiated, the personal computer transmits signals from an I/O port through the cable 30 to the infrared transmitter/receiver 26. The unit 26 then send signals to the video cassette recorder 14, which tune the set to the required channel and initiates the recording. Signals might also be sent to the cable box 16 to cause it to tune to the appropriate channel. As a third alternative, when the operator makes a programming selection, the information relating to that selection, including channel and the start and stop time could be immediately sent from unit 26 to video cassette recorder 14 to program the recorder for the future unattended recording of the desired program.

Alternatively the unit 26 may be detachable from the computer 18 so that after it is loaded with data on programs to be recorded it may be detached and moved into proximity with the receiver system 10, which may be located in another room.

To perform the transmission function, the personal computer 18 requires information as to the nature of the remote control codes used by the video recorder 14 and the cable box 16 if that is additionally to be controlled. Preferably, this information is provided from the remote database 40 during an initialization routine in which the operator keys in the identification of the make and model of the VCR and cable box. Alternatively, to acquire this information, the application program for the personal computer may go through an initialization routine using screens of the type illustrated at

www.freepatentsonline.com

50 in FIG. 5. These screens advise the computer operator to press selected buttons on the remote control transmitter 52 for the VCR 14 or the transmitter for the cable box 16. The personal computer application program receives signals from the IR sensor 32 and stores these codes for use in transmitting control signals to the video recorder 14 and the cable box 16. The application program may alternatively store a database of the control codes for popular video recorders or cable boxes and thus allow the unit to be identified by only pressing one or two selected keys, or it may require the operator to go through all of the keys in order to develop the appropriate remote control schedule.

In another embodiment of the invention the unit 26 includes sound detection apparatus. This provides several advantages, including the ability to receive information in acoustic form either from the personal computer or over a telephone line, for example using an acoustic coupler. An increasing number of conventional personal computers are now provided in standard form with a sound generating capability, and even if not factory supplied, numerous sound-generating modules and add-on cards are widely available as options. With such a capability residing in the personal computer, information may be transmitted from the personal computer to the module 26 in acoustical form. For example, information pertaining to a program to be recorded may be delivered in this manner, as well as any control code information required for proper activation and/or tuning of other system components, including the video recorder or cable box, to ensure that the proper channel is tuned at the appropriate time.

The ability to accept an acoustical signal may further facilitate an entirely wireless implementation of module 26, and may also enable module 26 to be partially or completely compatible with automated VCR programming techniques, including the VCRPlus™ system which is currently being marketed commercially. With VCRPlus™ program listings include a multi-digit numerical code which is entered by an operator to bring about the automatic, unattended recording of a particular program without the need for entering a more sophisticated sequence of information such as program start time, stop time, channel tuning, and so forth, as is presently entered through typical on-screen programming sequences. Certain of the VCRPlus™ modules contain acoustic couplers, enabling them to be programmed over a standard telephone line. Utilizing this capability, a customer dials a service telephone number and informs a representative or uses touch tone codes to enter information such as VCR make/manufacturer, cable tuner make/manufacturer, and geographic information, for example, in the form of a zip code. Given this information, the system then down-loads the appropriate control codes to be used by the VCRPlus™ module to ensure that the entry of a VCRPlus™ numerical code records the desired program for that user in their particular geographic area.

The present invention may take advantage of some or all of the VCRPlus™ features or similar features of any similar automated programming system. If the database received and stored in the personal computer by the present invention includes encoded program information such as VCRPlus™ codes, these may be delivered directly from the personal computer to the module 26 instead of more detailed program-related information. Although presently available VCRPlus™ control units typically only receive control code information in acoustic form, with the numerical code associated with a desired program entered via keypad, such units contain all of the hardware necessary to accept the numerical code in acoustic form as well. In such a case, then, with the present invention storing a large database of programs in the personal computer, the VCRPlus™ code alone may be delivered to the remote unit 26 to bring about the desired programming sequence. In the event that the unit 26 includes a sound detection capability, the numerical code may be transmitted by the personal computer to the module 26 in acoustic form, in addition to the remote-control codes, which may also be delivered in acoustic form, either from the personal computer or over a phone line as is currently the case with the VCRPlus™ system. In the event that the personal computer is used to transmit the control codes to the module 26, regardless of the form in which such codes are delivered, a look-up table may be provided to the personal computer either in disk form or through a separate telephonic connection, and upon entry of equipment make/model and any required geographic information by the operator through the keyboard provided on the personal computer, a look-up may be carried out by the computer so that the appropriate control codes are used for all equipment involved.

The embodiment of the invention illustrated in FIG. 7 is utilized in systems where the cassette recorder 14 is located a large distance from the personal computer 18, such as in another room of the house. In this system the remote I/R transmitter 26 is replaced by a radio transmitter 60. The radio signals are received by a remote receiver 64 disposed physically in front of the video recorder 14. Receiver 64 includes an infrared transmitter 66 and the received radio signals are transmitted into serial infrared commands which are transmitted by the unit 64 to the infrared receiver of the video recorder 14.

The application program for the remote television receiver 18 may also maintain a database of the programs that have been recorded by the system and allow display of these programs on the monitor of the personal computer. The identifying information may include codes as to the nature of the program such as a tennis match, comedy, movie or the like to allow menu-driven database operations to be used in the selection of programming for viewing. The information may record storage location of the programming, in terms of video cassettes, which the operator may enter into the system via the keyboard. A typical screen of this index is illustrated at 68 in FIG. 6.

Having thus described my invention, I claim:

1. A system for an unattended recording of a video program by a remotely controlled video recorder connected to a video source, comprising:

a personal computer having a display and a first memory to receive and store a schedule of video programming available from the source, the schedule including program titles;

an application program resident on the personal computer enabling an operator to view portions of the schedule on the display and select one or more programs for recording by the video recorder; and

an electronic module in communication with the personal computer, including:

means for receiving and storing information from the personal computer relating to a program to be recorded,

a second memory for storing remote control codes associated with the operation of the video recorder, and

a wireless remote-control transmitter operative to activate the video recorder using a control code previously stored in the second memory to record the

www.freepatentsonline.com

program in accordance with the information received from the personal computer.

2. The system of claim 1, the personal computer including an output port to which the electronic module is connected to receive the information relating to a program to be recorded, the module being detachable therefrom to activate the video recorder.

3. The system of claim 1, the electronic module further including sound detection apparatus for receiving information in the form an acoustical signal.

4. The system of claim 3, the personal computer including sound-generation apparatus, the information received by the electronic module in the form an acoustical signal including the information from the personal computer relating to a program to be recorded.

5. The system of claim 3, the information received in the form an acoustical signal including the control codes associated with the operation of the video recorder.

6. The system of claim 3, the information received in the form an acoustical signal including the control codes associated with the operation of the video recorder.

7. The system of claim 1, the schedule of video programming including a numerical code associated with a program to be recorded, the information received by the electronic module from the personal computer including the numerical code.

8. The system of claim 1, the module further including a remote-control receiver to detect codes transmitted by the remote control unit supplied with the remotely controlled video recorder, enabling the module to ascertain and store the codes associated with the operation of the video recorder.

9. A system to bring about the unattended recording of a video program by a remotely controllable video recorder connected to a source of programs through a remotely controllable multi-channel tuner, the system comprising:

a personal computer of conventional design including a display and a mass storage facility to receive a database of video programs available from the video source, including program title, date of occurrence, start time and channel tuning information;

an application program to be executed by the personal computer which enables an operator to view portions of the database on the display and to select one or more of the video programs to be recorded; and

a transmitter module in an enclosure separate from that of the personal computer, the module including:

a data-input port,

a memory,

a time-keeping device;

a wireless remote-control transmitter, and

a central processing element connected to the data-input port, the memory, the time-keeping device, and the remote-control transmitter, the central processing element being pre-programmed to perform the following functions:

cause the data-input port receive information from the personal computer relating to a program to be recorded, and store the information in the memory.

compare the output of the time-keeping device with the information stored in the memory, and

cause the remote-control transmitter to activate the video recorder and multi-channel tuner to record the program.

10. The system of claim 9, the remotely controllable multi-channel tuner forming part of the remotely controllable video recorder.

11. The system of claim 9, the remotely controllable multi-channel tuner forming part of a cable tuner.

12. The system of claim 9, including two remotely controllable multi-channel tuners, one forming part of the remotely controllable video recorder and the other forming part of a cable tuner.

13. The system of claim 9, the data-input port including an acoustic coupler to receive information in the form of an acoustic signal.

14. The system of claim 9, the memory within the transmitter module further storing control codes used to control the remotely controllable video recorder and multi-channel tuner.

15. The system of claim 9, wherein the information received from the personal computer includes program information in encrypted form.

16. The system of claim 15, wherein a program is encrypted in the form of a multi-digit numerical code.

17. A system for programming a video recorder having a remote control receiver for the unattended recording of programming from a video programming source connected to the video recorder, comprising:

a personal computer;

means within the personal computer for storing a database of future programming schedules including information relating to program identification and start time;

a wireless remote control transmitter including a real-time clock, means for storing data received form the personal computer relative to a program to be recorded including the start time of such program, and circuitry within the transmitter operative to compare the output of the real time clock with the stored start time of a program to be recorded and operate the video recorder at the time of the occurrence of the program to be recorded; and

an application program for the personal computer to transfer the data to the remote control transmitter to record a particular video program in accordance with information contained within the database being selected by a user of the personal computer.

18. The system of claim 17, including a remotely controllable cable tuner connected between the video programming source and the video recorder, the transmitter being further operative to send a signal to the cable tuner to record a particular video program in accordance with information contained within the database being selected by a user of the personal computer.

19. A method of programming a remotely controlled video recorder connected to a video source, comprising the steps of:

providing a personal computer with a display device to which there is attached an electronic module having a wireless transmitter;

receiving and storing, at the personal computer, a schedule of video programming available from the source, including the titles of available programs;

reviewing by a user selected portions of the schedule on the display device;

selecting by said user one or more of the displayed programs for recording by the video recorder;

downloading and storing information relating to the program(s) selected for recording intothe electronic module; and

transmitting a wireless remote-control signal from the electronic module to activate the video recorder in

www.freepatentsonline.com

accordance with the information downloaded from the personal computer.

20. The method of claim 19, wherein the step of transmitting the wireless remote-control signal from the electronic module occurs immediately after the step of downloading information pertaining to that program into the module.

21. The method of claim 19, wherein the module includes a memory, and wherein the step of downloading information pertaining to the program(s) selected for recording into the electronic module includes downloading such information into the memory, and wherein the step of transmitting the wireless remote-control signal from the electronic module occurs at the time of occurrence of a program to be recorded by retrieving required information from the memory.

22. The method of claim 19, further including the step of physically detaching the electronic module from the personal computer prior to the step of transmitting the wireless remote-control signal to the video recorder.

23. The method of claim 19, further including the step of teaching the electronic module remote-control codes used in activating the video recorder.

* * * * *

www.freepatentsonline.com

UNITED STATES PATENT AND TRADEMARK OFFICE

CERTIFICATE OF CORRECTION

PATENT NO. : 5,692,214
DATED : November 25, 1997
INVENTOR(S) : Levine

It is certified that error appears in the above-indentified patent and that said Letters Patent is hereby corrected as shown below:

Title page, item
(63) Related U.S. Application Data

Lines 2-11: Delete from ", which is a continuation-in-part of Ser. No." to "330,111, Dec. 14, 1981, abandoned.".

Signed and Sealed this
Second Day of June, 1998

Attest:

BRUCE LEHMAN

Attesting Officer

Commissioner of Patents and Trademarks

www.freepatentsonline.com

ADDED PAGE TO COMBINED DECLARATION AND POWER OF ATTORNEY FOR DIVISIONAL, CONTINUATION OR CIP APPLICATION

(complete this part only if this is a divisional, continuation or CIP application)

CLAIM FOR BENEFIT OF EARLIER U.S./PCT APPLICATION(S) UNDER 35 U.S.C. 120

I hereby claim the benefit under Title 35, United States Code, § 120 of any United States application(s) or PCT international application(s) designating the United States of America that is/are listed below and, insofar as the subject matter of each of the claims of this application is not disclosed in that/those prior application(s) in the manner provided by the first paragraph of Title 35, United States Code, § 112, I acknowledge the duty to disclose material information as defined in Title 37, Code of Federal Regulations, § 1.56(a) which occurred between the filing date of the prior application(s) and the national or PCT international filing date of this application.

PRIOR U.S. APPLICATIONS OR PCT INTERNATIONAL APPLICATIONS DESIGNATING THE U.S. FOR BENEFIT UNDER 35 USC 120:

U.S. APPLICATIONS		Status (*Check one*)		
U.S. APPLICATIONS	U.S. FILING DATE	Patented	Pending	Abandoned
1. 07/848,338	March 9, 1992		xx	
2. 07/802,249	December 4, 1991			xx
3.				
PCT APPLICATIONS DESIGNATING THE U.S.				
PCT APPLICATION NO.	PCT FILING DATE	U.S. SERIAL NOS. ASSIGNED (if any)		
4.		—		
5.				
6.				

(Added Page to Combined Declaration and Power of Attorney for Divisional Continuation or CIP Application [1–21]—page 1 of 2)

GIFFORD, KRASS, SPRINKLE, PATMORE, ANDERSON & CITKOWSKI, P.C. 280 N. OLD WOODWARD AVENUE, STE 400, BIRMINGHAM, MI 48009-5394 (248) 647-6000

IN THE UNITED STATES PATENT AND TRADEMARK OFFICE

In continuation of:

LEVINE

Serial No.: 08/287,343 Group No.: 2317

Filed: August 8, 1994 Examiner: K. Kim

Date of Notice of Allowance: July 9, 1997 Batch No.: P15

For: PERSONAL COMPUTER-BASED SCHEDULE GUIDE AND CONTROLLER FOR VIDEO RECORDER

Continuation application:

LEVINE

Attorney Docket No.: LVN-06703/03

Title: METHOD AND APPARATUS FOR RECEIVING CUSTOMIZED TELEVISION PROGRAMMING INFORMATION (Amended title)

PRELIMINARY AMENDMENT

Assistant Commissioner for Patents
Washington, D.C. 20231

Dear Sir:

Prior to examination, please amend the above-referenced continuation application as follows:

IN THE TITLE

Please replace the originally-filed title with the following:

~~METHOD AND APPARATUS FOR RECEIVING CUSTOMIZED TELEVISION PROGRAMMING INFORMATION~~.

B

GIFFORD, KRASS, GROH, SPRINKLE, PATMORE, ANDERSON & CITKOWSKI
280 N. OLD WOODWARD AVENUE, STE 400, BIRMINGHAM, MI 48009-5394 (248) 647-6000

IN THE SPECIFICATION

Page 1, lines 5-14, delete from ", which is a continuation-in-part of Serial No." to "filed December 14, 1981 (now abandoned)".

IN THE CLAIMS

Cancel claim 1.

Please add new claims 19-28 as follows:

19. In a television distribution arrangement wherein a plurality of geographically dispersed television viewing locations receive television programming from a source of such programming, a method of receiving information specific to the type of programming available to a particular one of the viewing locations, the method comprising the steps of:

providing a computerized unit at the particular viewing location, the unit including an operator input and a modem;

establishing a connection to a wide-area network through the modem;

transmitting, from the computerized unit, information to a service provider through the wide-area network regarding the geographical location of the particular viewing location; and

receiving, from the service provider, information specific to the type of programming available to the particular viewing location.

20. The method of claim 19, wherein the information transmitted to the service provider includes the Zip Code associated with the particular viewing location.

18

21. The method of claim 19, wherein the information received from the service provider includes a schedule of the television programming available to the particular viewing location.

22. The method of claim 19, wherein the computerized unit is interfaced to a display, and wherein the method further includes the step of displaying the information specific to the type of programming available to the particular viewing location.

23. The method of claim 19, wherein the computerized unit further includes a memory for storing the information specific to the type of programming available to the particular viewing location.

24. A method of receiving customized television programming schedule information, comprising the steps of:

providing, at a television viewing location, a controller interfaced to a bidirectional modem and a display device;

establishing a connection to a wide-area network through the modem;

transmitting, from the television viewing location, information to a service provider through the wide-area network regarding the geographical area of the viewing location;

receiving, from the service provider, television programming schedule information specific to the viewing location; and

viewing the information on the display device.

25. The method of claim 24, wherein the information transmitted to the service provider through the wide-area network regarding the geographical area of the viewing location is the Zip Code associated with the viewing location.

19

GIFFORD, KRASS, GROH, SPRINKLE, PATMORE, ANDERSON & CITKOWSKI, P.C. 280 N. OLD WOODWARD AVENUE, STE 400, BIRMINGHAM, MI 48009-5394 (248) 647-6000

26. A system enabling a viewer of a television receiver to download information specific to the type of television programming available to the receiver, the system comprising:

an electronic terminal unit including an operator input, a bidirectional modem, and a controller in communication with the operator input and the modem, the controller being programmed to perform the following functions:

a) establish a connection to a service provider through the modem,

b) receive information through the operator input pertaining to the geographic location of the television receiver,

c) transmit the information pertaining to the geographic location of the television receiver to the service provider, and

d) receive, from the service provider, the information specific to the type of television programming available to the receiver.

27. The system of claim 26, further including an electronic television interface in communication with the controller, the controller being further programmed to affect the operation of the television receiver in accordance with the information specific to the type of television programming available to the receiver.

28. The system of claim 26, further including a memory in communication with the controller for storing and retrieving the information specific to the type of television programming available to the receiver.

GIFFORD, KRASS, GROH, SPRINKLE, PATMORE, ANDERSON & CITKOWSKI, P.C. 280 N. OLD WOODWARD AVENUE, STE 400, BIRMINGHAM, MI 48009-5394 (248) 647-6000

Respectfully submitted,

By: _____

John G. Posa
Reg. No. 37,424
Gifford, Krass, Groh, Sprinkle,
Patmore, Anderson & Citkowski
280 N. Old Woodward Ave.
Suite 400
Birmingham, MI 48009
(313) 913-9300
FAX (313) 913-6007

Date: October 9, 1997

GIFFORD, KRASS, GROH, SPRINKLE, PATMORE, ANDERSON & CITKOWSKI, P.C. 280 N. OLD WOODWARD AVENUE, STE 400, BIRMINGHAM, MI 48009-5394 (248) 647-6000

UNITED STATES DEPARTMENT OF COMMERCE
Patent and Trademark Office
Address: COMMISSIONER OF PATENTS AND TRADEMARKS
Washington, D.C. 20231

APPLICATION NUMBER	FILING DATE	FIRST NAMED APPLICANT	ATTN. DOCKET NO.
08/947,950	10/09/97	LEVINE M	LVN-[illegible]

LM02/0729

JOHN G POSA
BIFFORD KRASS GROH PATMORE
ANDERSON & CITKOWSKI
280 N OLD WOODWARD AVE SUITE 400
BIRMINGHAM MI 48009

EXAMINER: KIM, K

ART UNIT: 2782 PAPER NUMBER: 4

DATE MAILED: 07/29/98

This is a communication from the examiner in charge of your application.
COMMISSIONER OF PATENTS AND TRADEMARKS

OFFICE ACTION SUMMARY

☑ Responsive to communication(s) filed on 10/9/97

☐ This action is FINAL.

☐ Since this application is in condition for allowance except for formal matters, prosecution as to the merits is closed in accordance with the practice under *Ex parte Quayle*, 1935 D.C. 11; 453 O.G. 213.

A shortened statutory period for response to this action is set to expire 3 month(s), or thirty days, whichever is longer, from the mailing date of this communication. Failure to respond within the period for response will cause the application to become abandoned. (35 U.S.C. § 133). Extensions of time may be obtained under the provisions of 37 CFR 1.136(a).

Disposition of Claims

☑ Claim(s) 19-28 is/are pending in the application.
Of the above, claim(s) _____ is/are withdrawn from consideration.
☐ Claim(s) _____ is/are allowed.
☑ Claim(s) 19-28 is/are rejected.
☐ Claim(s) _____ is/are objected to.
☐ Claim(s) _____ are subject to restriction or election requirement.

Application Papers

☑ See the attached Notice of Draftsperson's Patent Drawing Review, PTO-948.
☐ The drawing(s) filed on _____ is/are objected to by the Examiner.
☐ The proposed drawing correction, filed on _____ is ☐ approved ☐ disapproved.
☐ The specification is objected to by the Examiner.
☐ The oath or declaration is objected to by the Examiner.

Priority under 35 U.S.C. § 119

☐ Acknowledgment is made of a claim for foreign priority under 35 U.S.C. § 119(a)-(d).

☐ All ☐ Some* ☐ None of the CERTIFIED copies of the priority documents have been

☐ received.
☐ received in Application No. (Series Code/Serial Number): _____
☐ received in this national stage application from the International Bureau (PCT Rule 17.2(a)).

*Certified copies not received: _____

☐ Acknowledgment is made of a claim for domestic priority under 35 U.S.C. § 119(e).

Attachment(s)

☑ Notice of Reference Cited, PTO-892
☐ Information Disclosure Statement(s), PTO-1449, Paper No(s). _____
☐ Interview Summary, PTO-413
☑ Notice of Draftperson's Patent Drawing Review, PTO-948
☐ Notice of Informal Patent Application, PTO-152

--SEE OFFICE ACTION ON THE FOLLOWING PAGES--

FOL-[illegible] (Rev. [illegible])

* U.S. GPO: [illegible]

DETAILED ACTION

1. This Office Action is responsive to the preliminary amendments A and B both filed on October 9, 1997. As requested by the amendments, claims 1-18 are canceled, and claims 19-28 are added. Thus, claims 19-28 are currently pending in the application which is a Rule 60 continuation application of prior application, serial number 08/287,343 (now abandoned).

Claim Rejections - 35 USC § 103

2. The following is a quotation of 35 U.S.C. 103(a) which forms the basis for all obviousness rejections set forth in this Office action:

> (a) A patent may not be obtained though the invention is not identically disclosed or described as set forth in section 102 of this title, if the differences between the subject matter sought to be patented and the prior art are such that the subject matter as a whole would have been obvious at the time the invention was made to a person having ordinary skill in the art to which said subject matter pertains. Patentability shall not be negatived by the manner in which the invention was made.

3. Claims 19, 21-23, 24, 26-28 are rejected under 35 U.S.C. 103(a) as being unpatentable over Alten et al., US Patent 5,781,246 in view of Mankovitz, US Patent 5,703,795.

As to claims 19, 24 and 26, Alten et al. teaches a system for and a method of, in a television distribution arrangement wherein a plurality of geographically dispersed television viewing location receive television programming from a source of such programming, receiving information specific to the type of programming available to a particular one of the viewing location (Col. 1, lines 9-17 and Col. 7, lines 31-52), comprising:

means for and step of providing a computerized unit at the particular viewing location, the unit including an operator input (Fig. 1, #29);

receiving from the service provider, information specific to the type of programming available to the particular viewing location (Col. 7, lines 44-63); and

displaying of the programming information (See for example, Fig. 43A).

Alten et al., while teaching that the schedule information may be transmitted through means other than the exemplar broadcasting (Col. 7, lines 53 - Col. 8, line 21), does not explicitly teach that the transmission is through a WAN via a modem.

Mankovitz, teaches an another television programming information provider server/client network in which the information is transmitted through a WAN (connected via a telephone network) via a modem (See Abstract, and Fig. 18). Mankovitz further teaches that the user inputs the desired geographical location, and the server transmits the programming information appropriate for the geographical location (Fig. 34, step #1454 and Col. 28, lines 13-26 and Col. 31, lines 12-16).

It would have been obvious to one of ordinary skill in the art at the time the invention was made to implement the transmission of TV programming information via modem in a client/server through a WAN as taught by Mankovitz in the system taught by Alten et al. since both systems are directed to the same field of endeavor of providing TV programming information, and since Alten et al. contemplates all known transmission methods (See Alten et al., Col. 7, lines 53-59 and

Col. 8, lines 16-21), and communication and retrieval of information in a client/server environment via a modem is notoriously well known in the art at the time of the invention.

As to claims 21-23, Alten et al. further teaches providing a schedule of the television programming (Figs. 25, 43A and 43B), a memory for storing the information (Fig. 1, #18, Col. 8, lines 3-21 and Col. 9, lines 14-16), and displaying of the information (See for example, Fig. 43A).

As to claims 27 and 28, Alten et al. further teaches a television interface in communication with the controller to affect the operation of the television receiver, and for storing and retrieving the schedule information to the television receiver (See Fig. 1 and Col. 7, line 30 - Col. 9, line 47).

4. Claims 20 and 25 are rejected under 35 U.S.C. 103(a) as being unpatentable over Alten et al. in view of Mankovitz as applied to claims 19 and 24 above, and further in view of Kwoh et al, US Patent 5,382,983.

Alten et al. in view of Mankovitz teaches the invention substantially as claimed and as explained above.

Although, Mankovitz contemplates using the viewer's city as the criteria for selecting the appropriate programming schedule for a particular geographical location (Fig. 34, step #1454 and Col. 28, lines 13-26 and Col. 31, lines 12-16), Alten et al. in view of Mankovitz does not explicitly teach the use of the ZIP code for the selection.

Kwoh et al. teaches an another TV schedule information server/client (Col. 1, line 54 - Col. 2, line 41) in which the ZIP code of the viewer is used for the selection (Col. 8, lines 47-68).

It would have been obvious to a person of ordinary skill in the art, at the time the invention was made, to utilize the ZIP code to determine the proper locality of the viewer as taught by Kwoh et al. as ab alternative means to the name of the city as contemplated by Mankovitz as the ZIP code information is already collected in the Mankovitz's system, and would be an available information.

Conclusion

5. The prior art made of record and not relied upon is considered pertinent to applicant's disclosure.

U.S. Patent:	Issued:	Inventor:	Filed:
4,751,578	Jun 88	Reiter et al.	May 85
5,619,274	Apr 97	Roop et al.	May 94
5,291,554	Mar 94	Morales	Aug 92
4,734,765	Mar 88	Okada et al.	Dec 78
4,630,108	Dec 86	Gomersall	Mar 84
4,521,914	Jun 85	Petrovic	Nov 81
5,663,757	Sep 97	Morales	Mar 91
5,485,219	Jan 96	Woo	Apr 94
5,404,505	Apr 95	Levinson	Nov 91

6. Any inquiry concerning this communication or earlier communications from the examiner should be directed to Ki Kim whose telephone number is (703) 305-3872, and whose E-mail Address is ki.kim@uspto.gov. The examiner can be normally be reached Monday through Friday from 7:00 AM to 4:00 PM EST.

If attempts to reach the examiner by telephone are unsuccessful, the Examiner's supervisor, Thomas C. Lee, can be reached at (703) 305-9717.

Any inquiry of a general nature or relating to the status of this application should be directed to the Group receptionist whose telephone number is (703) 305-9600.

Any response to this action should be mailed to:

Commissioner of Patents and Trademarks
Washington, D.C. 20231

or faxed to:

(703) 308-9051, (for formal communications intended for entry)

Or:

(703)308-5359, (for informal or draft communications, please label "PROPOSED" or "DRAFT")

Hand-delivered responses should be brought to Crystal Park II, 2121 Crystal Drive, Arlington. VA., Sixth Floor (Receptionist).

Ki Kim
July 24, 1998

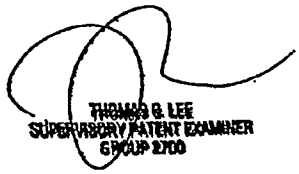

OIPE DEC 07 1998 JC51 PATENT & TRADEMARK OFFICE

RECEIVED
DEC 11 1998
Group 2700

IN THE UNITED STATES PATENT AND TRADEMARK OFFICE

In re application of: Levine

Serial No.: 08/947,950 Group No.: 2782

Filed: October 9, 1997 Examiner: K. Kim

For: METHOD AND APPARATUS FOR RECEIVING CUSTOMIZED TELEVISION PROGRAMMING INFORMATION

#6/C BH 12/14/98

AMENDMENT

Assistant Commissioner for Patents
Washington, D.C. 20231

Dear Sir:

In response to the Office Action dated July 29, 1998, please amend the above-referenced application as follows:

IN THE SPECIFICATION

Page 1, line 3, after "1992," insert --now U.S. Patent No. 5,692,214--.

Remarks

The claims of this application are being resubmitted in unamended form for reconsideration on several grounds. First, the Examiner will note that this application claims priority to earlier applications, certain of which predate the filing dates of the cited references. In particular, the priority date of the instant application predates the filing dates of the Alten et al, Mankovitz and Kwoh et al patents, though it is noted that all three provide related U.S. application data. However, in the case of Alten et al and Mankovitz, the earlier U.S. applications are continuations-in-part, such that a more comprehensive analysis as to when the prior

GIFFORD, KRASS, GROH, SPRINKLE, PATMORE, ANDERSON & CITKOWSKI, P.C. 280 N. WOODWARD AVENUE, STE. 400, BIRMINGHAM, MICH. 48009-5394 (248) 647-6000

GIFFORD, KRASS, GROH, SPRINKLE, PATMORE, ANDERSON & CITKOWSKI, P.C. 280 N. WOODWARD AVENUE, STE. 400, BIRMINGHAM, MICH. 48009-5394 (248) 647-6000

art introduced new matter may need to be undertaken relative to Applicant's own dates of invention and reduction to practice.

In addition to questions as to priority, it is Applicant's position that Alten et al does not disclose or suggest, even in combination with Mankovitz, U.S. Patent No. 5,703,795, Applicant's invention as claimed. In particular, all of Applicant's independent claims include the step or apparatus associated with transmitting, from a viewing location, information to a service provider through a wide-area network regarding the geographical location of the particular viewing location. Though the Examiner cites column 1, lines 9-17 and column 7, lines 31-52 of Alten et al, Applicant can find no support in either one of these passages which would form a reasonable grounds for rejection of Applicant's claims. Column 1, lines 9-17 of Alten et al states only that the invention of Alten et al relates to an improved electronic program guide "that provides the user with a more powerful and convenient operating environment" by making navigation more efficient. And although column 7, lines 31-52 state that the date a provider may contain information about programs or services available in a particular market, geographical or otherwise, the Alten patent is silent as to the transmission of geographical information from the viewer location to the service provider.

It is noted that the Examiner's analysis on page 3 of the Office Action is silent with regard these aspects of Applicant's invention. While conceding that Alten et al does not exclusively teach a transmission through a wide-area network via a modem, the Examiner seems to be disregarding the fact that, according to

GIFFORD, KRASS, GROH, SPRINKLE, PATMORE, ANDERSON & CITKOWSKI, P.C. 280 N. WOODWARD AVENUE, STE. 400, BIRMINGHAM, MICH. 48009-5394 (248) 647-6000

Applicant, such transmission also occurs according to Applicant's claims from the viewer location to the service provider in regards to geographical location. Thus, whether or not Alten et al discloses transmission through a WAN via a modem, which the Examiner admits it does not, it certain does not touch upon the receipt of information flowing from the opposite direction.

In rejecting claims under 35 U.S.C. §103, it is incumbent upon the Examiner to establish a factual basis to support the legal conclusion of obviousness. See In Re Fine, 837 F.2d 1071, 1073, 5 USPQ2d 1596, 1598 (Fed. Cir. 1988). In so doing, the Examiner is expected to make the factual determinations set forth in Graham v. John Deere Co., 383 U.S. 1, 17, 148 USPQ 5569, 467 (1966), and to provide a reason why one having ordinary skill in the pertinent art would have been led to modify the prior art or to combine prior art references to arrive at the claimed invention. Such reason must stem from some teaching, suggestion or implication in the prior art as a whole or knowledge generally available to one having ordinary skill in the art. Uniroyal Inc. v. Rudkin-Wiley Corp., 837 F.2d 1044, 1051, 5 USPQ2d 1434, 1438 (Fed. Cir.), cert. denied, 488 U.S. 825 (1988); Ashland Oil, Inc. v. Delta Resins & Refractories, Inc., 776 F.2d 281, 293, 227 USPQ 657,664 (Fed. Cir. 1985), cert. denied, 475 U.S. 1017 (1986); ACS Hospital Systems, Inc. v. Montefiore Hospital, 732 F.2d 1572, 1577, 221 USPQ 929, 933 (Fed. Cir. 1984). These showings by the Examiner are an essential part of complying with the burden of presenting a prima facie case of obviousness. Note In Re Oetiker, 977 F.2d 1443, 1445, 24 USPQ2d 1443, 1445 (Fed. Cir. 1992).

In this case, the Examiner has not provided any substantive

GIFFORD, KRASS, GROH, SPRINKLE, PATMORE, ANDERSON & CITKOWSKI, P.C. 280 N. WOODWARD AVENUE, STE. 400, BIRMINGHAM, MICH. 48009-5394 (248) 647-6000

reason why Mankovitz (or other patents used to reject other groups of claims) should be combined with Alten et al to arrive at Applicant's claimed invention, other than the Examiner's argument that "Alten et al contemplates all known transmission methods," citing Alten et al at column 7, lines 53-59 and column 8, lines 16-21. However, this argument, in and of itself, does not provide sufficient justification to reject Applicant's claims which include various other features in combination. Applicant takes issue with the combination of Alten and Mankovitz in view of Kwoh et al for similar reasons. The Examiner admits on page 4 of the Office Action that Alten et al in view of Mankovitz does not explicitly teach the use of the zip code for selection purposes, but on page 5 of the Office Action the Examiner states that since zip code information is "already collected in the Mankovitz system," it would be "available information" and, therefore, available for Applicant's purposes as claimed. However, there is no support, outside of Applicant's own disclosure, upon which to draw such a conclusion.

Based upon the foregoing, Applicant believes all pending claims remain in condition for allowance, and notice to that affect is solicited at this time. Questions regarding this application should be directed to the undersigned attorney at the telephone and facsimile numbers provided.

RECEIVED
DEC 11 1998
Group 2700

Respectfully submitted,

By: _____

John G. Posa
Reg. No. 37,424
Gifford, Krass, Groh, Sprinkle,
Patmore, Anderson & Citkowski
280 N. Old Woodward Ave.
Suite 400
Birmingham, MI 48009
(734) 913-9300

Date: Nov. 30, 1998

CERTIFICATE OF MAILING

I hereby certify that this paper (along with any paper referred to as being attached or enclosed) is being deposited with the United States Postal Service as first class mail in an envelope addressed to: Assistant Commissioner for Patents, Washington, D.C. 20231, on the date shown below.

Date: Nov. 30, 1998

Sheryl L. Hammer

GIFFORD, KRASS, GROH, SPRINKLE, PATMORE, ANDERSON & CITKOWSKI, P.C. 280 N. WOODWARD AVENUE, STE. 400, BIRMINGHAM, MICH. 48009-5394 (734) 647-6000

UNITED STATES DEPARTMENT OF COMMERCE
Patent and Trademark Office
Address: COMMISSIONER OF PATENTS AND TRADEMARKS
Washington, D.C. 20231

NC

APPLICATION NO.	FILING DATE	FIRST NAMED INVENTOR	ATTORNEY DOCKET NO.
08/947,950	10/09/97	LEVINE M	LVN-06703/03

LM12/0219

JOHN G POSA
GIFFORD KRASS GROH PATMORE
ANDERSON & CITKOWSKI
280 N OLD WOODWARD AVE SUITE 400
BIRMINGHAM MI 48009

EXAMINER	
WANG, A	
ART UNIT	PAPER NUMBER
2782	

DATE MAILED: 02/19/99

Please find below and/or attached an Office communication concerning this application or proceeding.

Commissioner of Patents and Trademarks

PTO-90C (Rev. 2/95)
U.S. GPO: 1998-437-636/60022

1- File Copy

Office Action Summary

Application No.	Applicant(s)
08/947,950	Levine
Examiner	**Group Art Unit**
Albert Wang	2782

☒ Responsive to communication(s) filed on *amdt C filed Dec 7, 1998*.

☐ This action is FINAL.

☐ Since this application is in condition for allowance except for formal matters, prosecution as to the merits is closed in accordance with the practice under *Ex parte Quayle*, 1935 C.D. 11; 453 O.G. 213.

A shortened statutory period for response to this action is set to expire 3 month(s), or thirty days, whichever is longer, from the mailing date of this communication. Failure to respond within the period for response will cause the application to become abandoned. (35 U.S.C. § 133). Extensions of time may be obtained under the provisions of 37 CFR 1.136(a).

Disposition of Claims

☒ Claim(s) *19-28* is/are pending in the application.

Of the above, claim(s) _____ is/are withdrawn from consideration.

☐ Claim(s) _____ is/are allowed.

☒ Claim(s) *19-28* is/are rejected.

☐ Claim(s) _____ is/are objected to.

☐ Claims _____ are subject to restriction or election requirement.

Application Papers

☐ See the attached Notice of Draftsperson's Patent Drawing Review, PTO-948.

☐ The drawing(s) filed on _____ is/are objected to by the Examiner.

☐ The proposed drawing correction, filed on _____ is ☐ approved ☐ disapproved.

☐ The specification is objected to by the Examiner.

☒ The oath or declaration is objected to by the Examiner.

Priority under 35 U.S.C. § 119

☐ Acknowledgement is made of a claim for foreign priority under 35 U.S.C. § 119(a)-(d).

☐ All ☐ Some* ☐ None of the CERTIFIED copies of the priority documents have been

☐ received.

☐ received in Application No. (Series Code/Serial Number) _____.

☐ received in this national stage application from the International Bureau (PCT Rule 17.2(a)).

*Certified copies not received: _____.

☐ Acknowledgement is made of a claim for domestic priority under 35 U.S.C. § 119(e).

Attachment(s)

☒ Notice of References Cited, PTO-892

☐ Information Disclosure Statement(s), PTO-1449, Paper No(s). _____

☐ Interview Summary, PTO-413

☐ Notice of Draftsperson's Patent Drawing Review, PTO-948

☐ Notice of Informal Patent Application, PTO-152

— SEE OFFICE ACTION ON THE FOLLOWING PAGES —

U.S. Patent and Trademark Office
PTO-326 (Rev. 9-95) Office Action Summary Part of Paper No. 7

DETAILED ACTION

1. This office action is responsive to amendment C, filed Dec. 7, 1998, in which claims 19-28 are resubmitted in unamended form for reconsideration. The application is a continuation of Ser. No. 08/287,343, filed Aug. 8, 1994, now Pat. No. 5,692,214, which is a continuation-in-part of Ser. No. 07/848,338, filed Mar. 9, 1992, now abandoned.

Amendment C claims that the application has a priority date that predates the references used in the non-final rejection of the previous office action, but does not give a specific date as a priority date. During a telephone conversation with John G. Posa on Feb. 11, 1999, a priority date of Mar. 9, 1992 was claimed.

Claim Rejections - 35 U.S.C. § 103

2. The following is a quotation of 35 U.S.C. 103(a) which forms the basis for all obviousness rejections set forth in this Office action:

> (a) A patent may not be obtained though the invention is not identically disclosed or described as set forth in section 102 of this title, if the differences between the subject matter sought to be patented and the prior art are such that the subject matter as a whole would have been obvious at the time the invention was made to a person having ordinary skill in the art to which said subject matter pertains. Patentability shall not be negatived by the manner in which the invention was made.

3. Claims 19-28 are rejected under 35 U.S.C. 103(a) as being unpatentable over Young, U.S. Patent Number 4,706,121.

As to claim 19, Young teaches in a television distribution arrangement, a method of receiving information specific to the type of programming available to a particular viewing location, the method comprising the steps of:

providing a computerized unit (personal computer-- col. 22 lines 1-9; system control unit 106 with CPU 110-- Fig. 3) at the particular viewing location, the unit including an operator input (inherent to personal computer, e.g. keyboard; remote control 116-- Fig. 3);

transmitting, from the computerized unit, information to a service provider (Compuserve or The Source-- col. 22 lines 1-9) regarding the geographic location (locality-- col. 22 lines 1-9) of the particular viewing location; and

receiving, from the service provider, information (schedule information-- col. 22 line 1-9) specific to the type of programming available to the particular viewing area.

While Young does not explicit teach establishing a connection to a wide-area network through a modem, such a step is inherent to accessing a service provider (Compuserve-- col. 22 lines 1-9). Moreover, the applicant's specification teaches establishing a connection to a wide-area network in a similar indirect manner (Compuserve-- page 8). Therefore Young teaches the invention as claimed in claim 19.

As to claim 20, though Young does not explicitly teach using zip codes to identify a location, such use would have been obvious to one skilled in the art.

As to claim 21, Young teaches that the information received from the service provider includes a schedule of the television programming available to the particular viewing area ("download program schedule information for his or her locality"-- col. 22 lines 1-9).

As to claim 22, Young teaches that the computerized unit is interfaced to a display (TV receiver 126-- Fig 3) that displays the information specific to viewing location.

As to claim 23, Young teaches that the computerized unit further includes a memory (memory 11-- Fig. 3) for storing the information specific to viewing location.

As to claims 24-28, since Young teaches the method of receiving information specific to viewing location in claims 19-23, Young teaches the method of receiving customized television programming schedule information in claims 24-25 and the system to download in claims 26-28.

Conclusion

4. The prior art below made of record and not relied upon is considered pertinent to applicant's disclosure.

U.S. Patent Number	*Date Issued*	*Inventor*	*Date Filed*
5,534,911	07/1996	Levitan	11/1994
5,223,924	06/1993	Strubbe	05/1992

5. Any inquiry concerning this communication should be directed to Albert Wang, whose telephone number is (703) 305-4080, and whose e-mail address is albert.wang@uspto.gov. The Examiner can normally be reached Monday through Friday from 8:30 AM to 5:00 PM.

If attempts to reach the Examiner by telephone are unsuccessful, the Examiner's supervisor, Thomas Lee, can be reached at (703) 305-9717. The fax phone number for this Group is (703) 305-3718.

Any inquiry of a general nature of relating to the status of this application should be directed to the Group receptionist whose telephone number is (703) 305-3900.

Mailed responses to this action should be sent to:
Commissioner of Patents and Trademarks
Washington, D.C. 20231.

Faxes for formal communications intended for entry should be sent to:
(703) 308-9051,
or, for informal or draft communications, to:
(703) 305-3718 (please label "PROPOSED" or "DRAFT").

Hand-delivered responses should be brought to:
Crystal Park II, 2121 Crystal Drive, Arlington, VA, Sixth Floor (Receptionist).

Albert Wang
February 12, 1999

THOMAS C. LEE
SUPERVISORY PATENT EXAMINER
GROUP 2700

GIFFORD, KRASS, GROH, SPRINKLE, ANDERSON & CITKOWSKI, P.C. 280 N. OLD WOODWARD AVENUE, STE. 400, BIRMINGHAM, MICHIGAN 48009-5394 (248) 647-6000

RECEIVED
99 MAY 24 PM 1:09
GROUP 2100

OIPE
MAY 20 1999
PATENT & TRADEMARK OFFICE

IN THE UNITED STATES PATENT AND TRADEMARK OFFICE

In re application of: Levine

Serial No.: 08/947,950 Group No.: 2782

Filed: Oct. 9, 1997 Examiner: 2782

For: PERSONAL COMPUTER-BASED SCHEDULE GUIDE AND CONTROLLER FOR VIDEO RECORDER

RESPONSE TO OFFICE ACTION

Assistant Commissioner for Patents
Washington, D.C. 20231

Dear Sir:

In response to the Office Action mailed February 19, 1999, the Examiner's attention is directed to the remarks below.

Remarks

All of the claims of this application are being resubmitted in unamended form in view of the following remarks.

Claims 19-28 stand rejected under 35 U.S.C. §103(a) as being unpatentable over Young ('121 of record). Applicant respectfully disagrees with the Examiner's interpretation of the Young patent, and submits that obviousness is precluded in this case.

All of Applicant's independent claims include the limitation, in one form or another, of transmitting, from a computerized unit situated at a viewing location, information regarding geographical location. The Young patent does not disclose or suggest such a limitation. The Examiner argues that the Young patent teaches "transmitt[al of], from the computerized unit, information to a service provider (Compuserve or The Source-- col. 22 lines 1-9) regarding the geographic location (locality-- col. 22

lines 1-9) of the particular viewing location." However, retrieval of information from a database does not, by definition, include or even suggest transmittal of a viewer's geographic location. The '121 patent describes the process of "download[ing] the program schedule information for his or her locality" (Young patent-- col. 22, ln. 5-7). This description does not imply transmitting particular geographical location information. Most database applications allow a user to passively select information from a list/menu, or to search a database without transmitting location-specific information. Such applications provide choices from which a user may select without transmitting a request.

In contrast, Applicant's claim 19 clearly sets forth the active transmittal of "geographical location of the particular viewing location." This language explicitly requires data transmission from the user "to a wide-area-network through [a] modem" before retrieval of the desired information can occur. The user of Applicant's device must transmit an affirmative indication of his viewing location before receiving programming data. Although the Young patent specification considers user inputs to a "utility's mainframe for running a selection program on the mainframe" (col. 22, ln. 3-4), and this may occur via a modem, it does not require a user's geographical input.

Since it Applicant's position that all of the independent claims distinguish over the Young patent, Applicant need not argue the dependent claims separately. Nevertheless, with specific reference to dependent claims 20 and 25, the Examiner concedes that

GIFFORD, KRASS, GROH, SPRINKLE, ANDERSON & CITKOWSKI, P.C. 280 N. OLD WOODWARD AVENUE, STE. 400, BIRMINGHAM, MICHIGAN 48009-5394 (248) 647-6000

Young does not teach using zip codes, but contends that such a teaching would be "obvious to one of skill in the art." Applicant disagrees and requests that the Examiner either find a reference addressing the limitations of claims 20 and 25, or withdraw the rejection. MPEP §2143, *et seq.*

Based upon the foregoing comments, Applicant believes all pending claims 19-28 continue to be in condition for allowance, and notice to that affect is solicited at this time. Questions regarding this application should be directed to the undersigned attorney at the telephone and facsimile numbers provided.

Respectfully submitted,

By: _____

John G. Posa
Reg. No. 37,424
Gifford, Krass, Groh, Sprinkle,
Anderson & Citkowski, PC
280 N. Old Woodward Ave., Ste 400
Birmingham, MI 48009
(734) 913-9300 FAX (734) 913-6007

Date: May 17, 1999

CERTIFICATE OF MAILING (37 CFR 1.8(a))

I hereby certify that this paper (along with any paper referred to as being attached or enclosed) is being deposited with the United States Postal Service on the date shown below with sufficient postage as first class mail in an envelope addressed to: Assistant Commissioner for Patents, Washington, D.C. 20231.

Date: 5/18/99

Sheryl L. Hammer

GIFFORD, KRASS, GROH, SPRINKLE, ANDERSON & CITKOWSKI, P.C. 280 N. OLD WOODWARD AVENUE, STE. 400, BIRMINGHAM, MICHIGAN 48009-5394 (248) 647-6000

UNITED STATES DEPARTMENT OF COMMERCE
Patent and Trademark Office
Address: COMMISSIONER OF PATENTS AND TRADEMARKS
Washington, D.C. 20231

APPLICATION NO.	FILING DATE	FIRST NAMED INVENTOR	ATTORNEY DOCKET NO.
08/[illegible]950	9/97	LEVI M	LVN-06703/03

LM21/0621

JOHN G POSA
GIFFORD KRASS GROH PATMORE
ANDERSON & CITKOWSKI
280 N OLD WOODWARD AVE SUITE 400
BIRMINGHAM MI 48009

EXAMINER	ART UNIT	PAPER NUMBER
WANG, A	2782	#9

DATE MAILED: 06/21/99

Please find below and/or attached an Office communication concerning this application or proceeding.

Commissioner of Patents and Trademarks

See attached.

PTO-90C (Rev. 2/95) 1- File Copy

Exc Copy #9/D

Notice of Allowability	Application No. 08/847,950	Applicant(s) Levine
	Examiner Albert Wang	Group Art Unit 2782

All claims being allowable, PROSECUTION ON THE MERITS IS (OR REMAINS) CLOSED in this application. If not included herewith (or previously mailed), a Notice of Allowance and Issue Fee Due or other appropriate communication will be mailed in due course.

☒ This communication is responsive to *communication filed May 24, 1999*.

☒ The allowed claim(s) is/are *19-28 renumbered as 1-10*.

☒ The drawings filed on *Oct 9, 1997* are acceptable.

☐ Acknowledgement is made of a claim for foreign priority under 35 U.S.C. § 119(a)-(d).

☐ All ☐ Some* ☐ None of the CERTIFIED copies of the priority documents have been

☐ received.

☐ received in Application No. (Series Code/Serial Number) _____.

☐ received in this national stage application from the International Bureau (PCT Rule 17.2(a)).

*Certified copies not received: _____.

☐ Acknowledgement is made of a claim for domestic priority under 35 U.S.C. § 119(e).

A SHORTENED STATUTORY PERIOD FOR RESPONSE to comply with the requirements noted below is set to EXPIRE THREE MONTHS FROM THE "DATE MAILED" of this Office action. Failure to timely comply will result in ABANDONMENT of this application. Extensions of time may be obtained under the provisions of 37 CFR 1.136(a).

☐ Note the attached EXAMINER'S AMENDMENT or NOTICE OF INFORMAL APPLICATION, PTO-152, which discloses that the oath or declaration is deficient. A SUBSTITUTE OATH OR DECLARATION IS REQUIRED.

☐ Applicant MUST submit NEW FORMAL DRAWINGS

☐ because the originally filed drawings were declared by applicant to be informal.

☐ including changes required by the Notice of Draftsperson's Patent Drawing Review, PTO-948, attached hereto or to Paper No. _____.

☐ including changes required by the proposed drawing correction filed on _____, which has been approved by the examiner.

☐ including changes required by the attached Examiner's Amendment/Comment.

Identifying indicia such as the application number (see 37 CFR 1.84(c)) should be written on the reverse side of the drawings. The drawings should be filed as a separate paper with a transmittal letter addressed to the Official Draftsperson.

☐ Note the attached Examiner's comment regarding REQUIREMENT FOR THE DEPOSIT OF BIOLOGICAL MATERIAL.

Any response to this letter should include, in the upper right hand corner, the APPLICATION NUMBER (SERIES CODE/SERIAL NUMBER). If applicant has received a Notice of Allowance and Issue Fee Due, the ISSUE BATCH NUMBER and DATE of the NOTICE OF ALLOWANCE should also be included.

Attachment(s)

☐ Notice of References Cited, PTO-892

☐ Information Disclosure Statement(s), PTO-1449, Paper No(s). _____

☐ Notice of Draftsperson's Patent Drawing Review, PTO-948

☐ Notice of Informal Patent Application, PTO-152

☐ Interview Summary, PTO-413

☒ Examiner's Amendment/Comment

☐ Examiner's Comment Regarding Requirement for Deposit of Biological Material

☐ Examiner's Statement of Reasons for Allowance

THOMAS C. LEE
SUPERVISORY PATENT EXAMINER
GROUP 2700

U.S. Patent and Trademark Office
PTO-37 (Rev. 9-95) Notice of Allowability Part of Paper No. 9

EXAMINER'S AMENDMENT

1. An Examiner's Amendment to the record appears below. Should the changes and/or additions be unacceptable to applicant, an amendment may be filed as provided by 37 C.F.R. § 1.312. To ensure consideration of such an amendment, it MUST be submitted no later than the payment of the Issue Fee.

2. Pursuant to MPEP 606.01, the title has been changed to read:

– METHOD AND APPARATUS FOR RECEIVING CUSTOMIZED TELEVISION PROGRAMMING INFORMATION BY TRANSMITTING GEOGRAPHIC LOCATION TO A SERVICE PROVIDER THROUGH A WIDE-AREA NETWORK –

Conclusion

3. Any inquiry concerning this communication should be directed to Albert Wang, whose telephone number is (703) 305-4080, and whose e-mail address is albert.wang@uspto.gov. The Examiner can normally be reached Monday through Friday from 8:30 AM to 5:00 PM.

If attempts to reach the Examiner by telephone are unsuccessful, the Examiner's supervisor, Thomas Lee, can be reached at (703) 305-9717. The fax phone number for this Group is (703) 306-5404.

Any inquiry of a general nature of relating to the status of this application should be directed to the Group receptionist whose telephone number is (703) 305-3900.

Mailed responses to this action should be sent to:
Commissioner of Patents and Trademarks
Washington, D.C. 20231.

Faxes for formal communications intended for entry should be sent to:
(703) 308-9051,
or, for informal or draft communications, to:
(703) 306-5404 (please label "PROPOSED" or "DRAFT").

Hand-delivered responses should be brought to:
Crystal Park II, 2121 Crystal Drive, Arlington, VA, Sixth Floor (Receptionist).

Albert Wang
June 8, 1999

THOMAS C. LEE
SUPERVISORY PATENT EXAMINER
GROUP 2700

FORM PTO-1595
Rev. 10/95

04-28-1998

100696970

Docket No. 32316/WWM/G207

SHEET

APR 13 1998

RECEIPT ACCTING DIV

Box Assignment
Commissioner of Patents and Tradem
Washington, D.C. 20231

Post Office Box 7068
Pasadena, CA 91109-7068

Commissioner of Patents and Trademarks: Please record the attached original documents or copy thereof:

1. Name of conveying party(ies):

Michael R. Levine
Smart VCR Limited Partnership 4-13-98

Additional name(s) of conveying party(ies) attached: None

2. Name and address of receiving party(ies):

Name: Index Systems, Inc.

Street Address:

Post Office Box 71
Craigmuir Chambers
Road Town, Tortola
British Virgin Islands

Additional name(s) & address(es) attached? No

3. Name of conveyance:

☒ Assignment ☐ Merger
☐ Security Agreement ☐ Change of Name
☐ Other:

Execution Date: January 6, 1998

4. Application number(s) or patent number(s):

If this document is being filed together with a new application, the execution date of the application is:

A. Patent Application No.(s)
08/947,950

B. Patent No.(s)

04/27/1998 DCOATES 00000128 08947950
01 FC:581 40.00 OP

Additional numbers attached? No

5. Please return the recorded document and address all correspondence to:

CHRISTIE, PARKER & HALE, LLP
P.O. Box 7068
Pasadena, CA 91109-7068

Attention: Wesley W. Monroe

6. Total number of applications and patents involved..... 1

7. ☒ Total fee enclosed (37 CFR 3.41): $ 40.00

8. ☒ Any deficiency or overpayment of fees should be charged or credited to Deposit Account No. 03-1728, except for payment of issue fees required under 37 CFR § 1.18. Please show our docket number with any credit or charge to our Deposit Account.

10. ☐ Explanatory letter is enclosed.

9. Statement and signature.
To the best of my knowledge and belief, the foregoing information is true and correct and any attached copy is a true copy of the original document.

Date: April 6, 1998

By [signature]

Name: Wesley W. Monroe
626/795-9900; 213/681-1800

I HEREBY CERTIFY THAT THIS CORRESPONDENCE IS BEING DEPOSITED WITH THE U.S. POSTAL SERVICE AS FIRST CLASS MAIL IN AN ENVELOPE ADDRESSED TO: ASSISTANT COMMISSIONER FOR PATENTS, WASHINGTON, D.C. 20231 ON

4/6/98 Elaine Johnson
DATE SIGNATURE

Total number of pages including cover sheet, attachments, and document: 3

WWM/ej
EJ PAS125731,1-*-4/6/98 10:38 am

TG 000448

A 124

Docket No. G207:30/WWM Joint

ASSIGNMENT

WHEREAS, I, Michael R. Levine, residing at 2122 Northwest 60th Circle, Boca Raton, Florida 33496, have invented certain new and useful improvements disclosed in an application for United States Letters Patent entitled METHOD AND APPARATUS FOR RECEIVING CUSTOMIZED TELEVISION PROGRAMMING INFORMATION, Application No. (unassigned) filed October 9, 1997 and Smart VCR Limited Partnership, having a place of business at 2122 Northwest 60th Circle, Boca Raton, Florida 33496, is the assignee of record of said application (hereafter, collectively, together with any successors, legal representatives or assigns thereof, called "ASSIGNOR")

AND WHEREAS Index Systems, Inc., a British Virgin Islands corporation, having a place of business at Post Office Box 71, Craigmuir Chambers, Road Town, Tortola, British Virgin Islands (hereafter, together with any successors, legal representatives or assigns thereof, called "ASSIGNEE") wants to acquire the entire right, title and interest in and to said improvements and application.

NOW, THEREFORE, in consideration of the sum of One Dollar ($1.00) in hand paid, and other good and valuable consideration, the receipt of which is hereby acknowledged, ASSIGNOR has sold, assigned, transferred and set over, and does hereby sell, assign, transfer and set over to ASSIGNEE the entire right, title and interest in and to said improvements, and said application and all divisions and continuations thereof, and all United States Letters Patents which may be granted thereon and all reissues, reexaminations and extensions thereof, and all priority rights under all available International Agreements, Treaties and Conventions for the protection of intellectual property in its various forms in every participating country, and all applications for patents (including related rights such as utility-model registrations, inventor's certificates, and the like) heretofore or hereafter filed for said improvements in any foreign countries, and all patents (including all continuations, divisions, extensions, renewals, substitutes, and reissues thereof) granted for said improvements in any foreign countries; and ASSIGNOR hereby authorizes and requests the United States Commissioner of Patents and Trademarks, and any officials of foreign countries whose duty it is to issue patents on applications as aforesaid, to issue all patents for said improvements to ASSIGNEE in accordance with the terms of this Assignment;

AND ASSIGNOR HEREBY covenants that it has full right to convey the entire interest herein assigned, and that ASSIGNOR has not executed, and will not execute, any agreement in conflict herewith;

AND ASSIGNOR HEREBY further covenants and agrees that it will communicate to ASSIGNEE any facts known to us respecting said improvements, and testify in any legal proceeding, sign all lawful papers, execute all divisional, continuation, substitute and reissue applications, make all rightful oaths and generally do everything possible to aid ASSIGNEE to obtain and enforce proper patent protection for said improvements in all countries.

ASSIGNMENT **Joint**
Docket No. G207:30/WWM

IN TESTIMONY WHEREOF, I hereunto set my hand this 6 day of January 6, 1998.

SMART VCR LIMITED PARTNERSHIP

By: Michael R Levine
Michael R. Levine
General Partner

STATE OF Florida)
COUNTY OF Palm Beach)

On January 6 1998, before me Elizabeth A Wilsman, CPA, Notary Public, personally appeared Michael R. Levine personally known to me (or proved to me on the basis of satisfactory evidence) to be the person whose name is subscribed to the within instrument and acknowledged to me that he executed the same in his authorized capacity, and that by his signature on the instrument the person, or the entity upon behalf of which the person acted, executed the instrument.

NOTARY PUBLIC STATE OF FLORIDA
ELIZABETH A WILSMAN
My Commission CC571198
Expires Jul. 21, 2000

WITNESS my hand and official seal.

Elizabeth A. Wilsman
Signature of Notary

****

IN TESTIMONY WHEREOF, I hereunto set my hand this 6 day of January, 1998.

Michael R Levine
MICHAEL R. LEVINE

STATE OF Florida)
COUNTY OF Palm Beach)

On January 6, 1998, before me Elizabeth A. Wilsman, CPA Notary Public, personally appeared Michael R. Levine personally known to me (or proved to me on the basis of satisfactory evidence) to be the person whose name is subscribed to the within instrument and acknowledged to me that he executed the same in his authorized capacity, and that by his signature on the instrument the person, or the entity upon behalf of which the person acted, executed the instrument.

NOTARY PUBLIC STATE OF FLORIDA
ELIZABETH A WILSMAN
My Commission CC571198
Expires Jul. 21, 2000

WITNESS my hand and official seal.

Elizabeth A. Wilsman
Signature of Notary

****

AMH PA511998.1-*-2/6/98 2:54 PM

A S S I G N M E N T

WHEREAS, Index Systems, Inc. ("Index Systems"), a corporation organized and existing under the laws of the British Virgin Islands and having an office and place of business at Post Office Box 71, Craigmuir Chambers, Road Town, Tortola, British Virgin Islands, is the sole and exclusive owner of U.S. Patent No. 5,988,078, issued November 23, 1999 ("the '078 patent"); and

WHEREAS, TV Guide Online, LLC ("TV Guide Online"), a limited liability company organized and existing under the laws of the State of Delaware and having an office and place of business at 6922 Hollywood Blvd., Los Angeles, CA 90028, is desirous of acquiring the '078 patent.

NOW, THEREFORE, be it known that in consideration of the payment of good and valuable consideration, the sufficiency and receipt of which is hereby acknowledged, Index Systems does hereby sell, assign, and transfer to TV Guide Online, its successors, assigns, and legal representatives, the '078 patent, together with all right, title and interest therein held by Index Systems, including, but not limited to, the right to sue and recover for past infringement thereof, and any and all causes of action and remedies, either legal and/or equitable, related thereto.

Index Systems, Inc.
a British Virgin Islands Corporation

Name: Samir Aengl
Title: Senior Vice President
Date: October 6, 2005

LexisNexis™

Delaware Secretary of State Gateway

This data is for information purposes only, certification can only be obtained through the Division of Corporations, or from a Delaware Registered Agent's office located within the State of Delaware.

Source Info

Detail Information

Date/Time of Results: at

File Number: 4038909 **Name Type:** Delaware Company **Stock Co Flag:**

Name: TV GUIDE ONLINE, LLC

Kind: Ltd. Liability Company General **Status:** Good Standing as of 09-28-2005 **Tax Type:** Annual L.L.C. Tax

Residency: Domestic **State of Incorp:** DE **Country:** US

Original Country: **Incorp/Qualify Date:** 09-28-2005 **Foreign Incorporation Date:**

Proclamation Date: **Renewal Date:** **Expiration Date:**

Bankruptcy Status: **Bankruptcy Date:** **State:**

Case Number: **Merged To:** **State:**

Federal ID: **Quarterly Filing?:** **Last Annual Report:**

Registered Agent: 9000010
THE CORPORATION TRUST COMPANY
CORPORATION TRUST CENTER
1209 ORANGE STREET
WILMINGTON , DE19801

Registered Agent County: New Castle

Phone: 302-658-7581

Fax: 302-655-5049

Stock Information:

Amendment Number: **Effective Date:** **Effective Time:**

Stock Seq Number	Description	Series	Class	Authorized	Par Value

Filing History:

Seq Number	Filing Year	Doc Code	Doc Code Desc	Doc Pages	Dom Pages	Doc Filing Date	Doc Filing Time	Doc Effective Date	Doc Filing Status	Co Prev Name	Merger Type
1	2005	0102Y	Register L.L.C.	1		09-28-2005	20:48	09-28-2005			

Tax Info:

As Of Date: 12-19-2005 **Tax Balance:** .00

Tax Year	Total Filing	Total Taxes	Total Penalty	Total Interest	Total Other	Total Paid	Total Balance

Go Back

Go Back to Search

TMS 0068738

About LexisNexis | Terms and Conditions | Change Password

Copyright © 2005 LexisNexis, a division of Reed Elsevier Inc. All rights reserved.
Delaware graphic courtesy of The General Libraries, The University of Texas at Austin.

United States Patent [19]
Young

[11] **Patent Number: 4,706,121**
[45] **Date of Patent: Nov. 10, 1987**

[54] **TV SCHEDULE SYSTEM AND PROCESS**

[76] Inventor: Patrick Young, 1496 Cherrywood Dr., San Mateo, Calif. 94403

[21] Appl. No.: 860,077

[22] Filed: May 6, 1986

Related U.S. Application Data

[63] Continuation-in-part of Ser. No. 754,630, Jul. 12, 1985, abandoned.

[51] Int. Cl.[4] H04N 7/093; H04N 7/08
[52] U.S. Cl. 358/142; 358/146; 358/147; 455/181; 455/186; 340/825.22
[58] Field of Search 358/142, 146, 147, 191.1, 358/189, 84, 85, 86; 455/181, 186; 340/825.22

[56] **References Cited**

U.S. PATENT DOCUMENTS

4,170,782 10/1979 Miller 358/84
4,488,179 12/1984 Krüger et al. 358/147

FOREIGN PATENT DOCUMENTS

2034995 6/1980 United Kingdom 455/186

Primary Examiner—James J. Groody
Assistant Examiner—Michael D. Parker
Attorney, Agent, or Firm—Flehr, Hohbach, Test, Albritton & Herbert

[57] **ABSTRACT**

A system (90) controls a television receiver (126) to allow user selection of broadcast programs from schedule information. A data processor (110) is connected to receive the schedule information from an FM receiver (94), decoder (98) and data demodulator (102). A user remote control transmitter 116-remote receiver (118) combination supplies user selection inputs to the data processor (110). The data processor (110) selects programs from the schedule information based on the user inputs. The schedule information for the selected programs is stored in a memory (111), and is used by the data processor (110) to control a programmable TV tuner (132) to provide the broadcast signals for the selected programs to the TV receiver (126) at the time of broadcast. The system (90) can also be used to control a VCR (150) for unattended recording of the selected programs.

56 Claims, 14 Drawing Figures

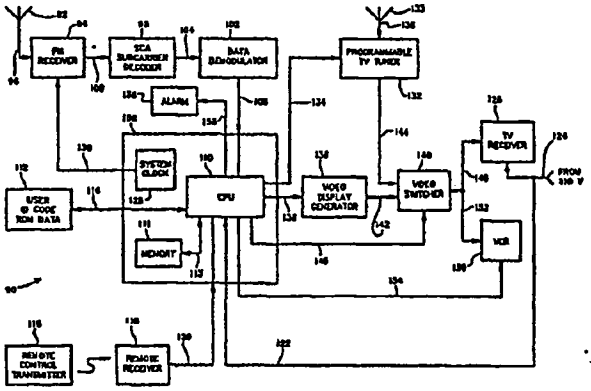

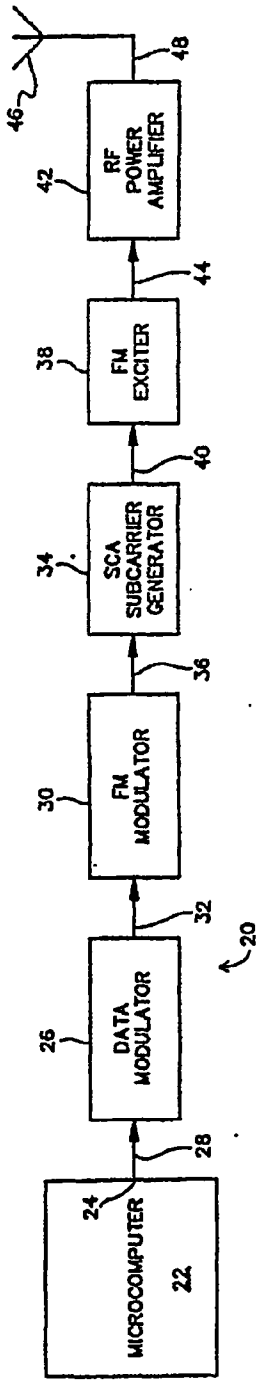

FIG. 1

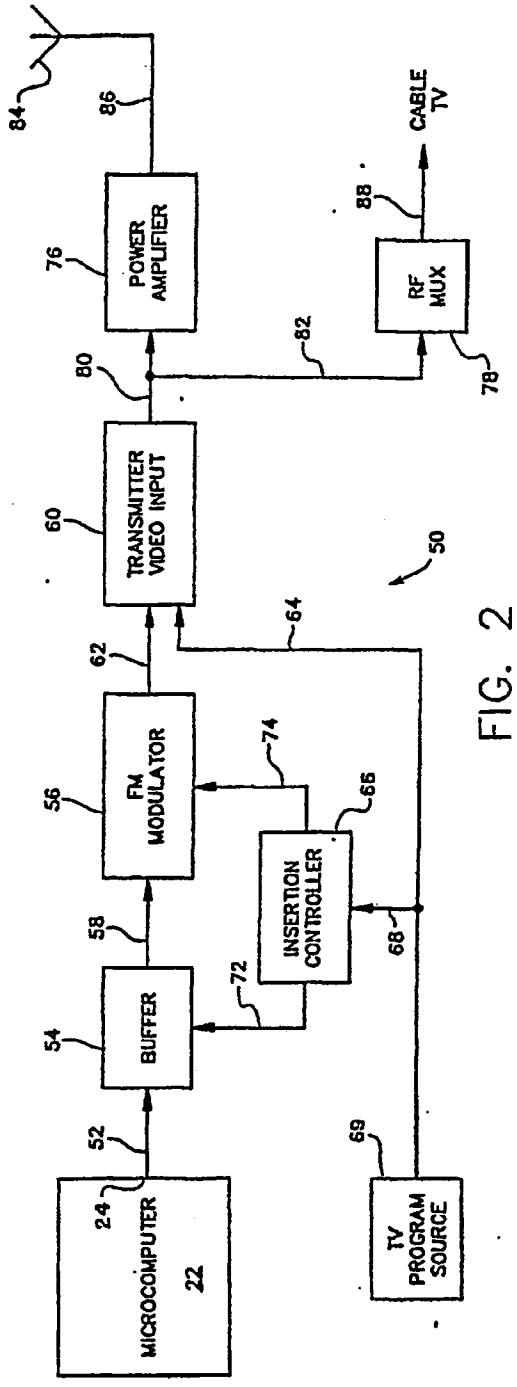

FIG. 2

TMS 0001292

A 131

FIG. 3

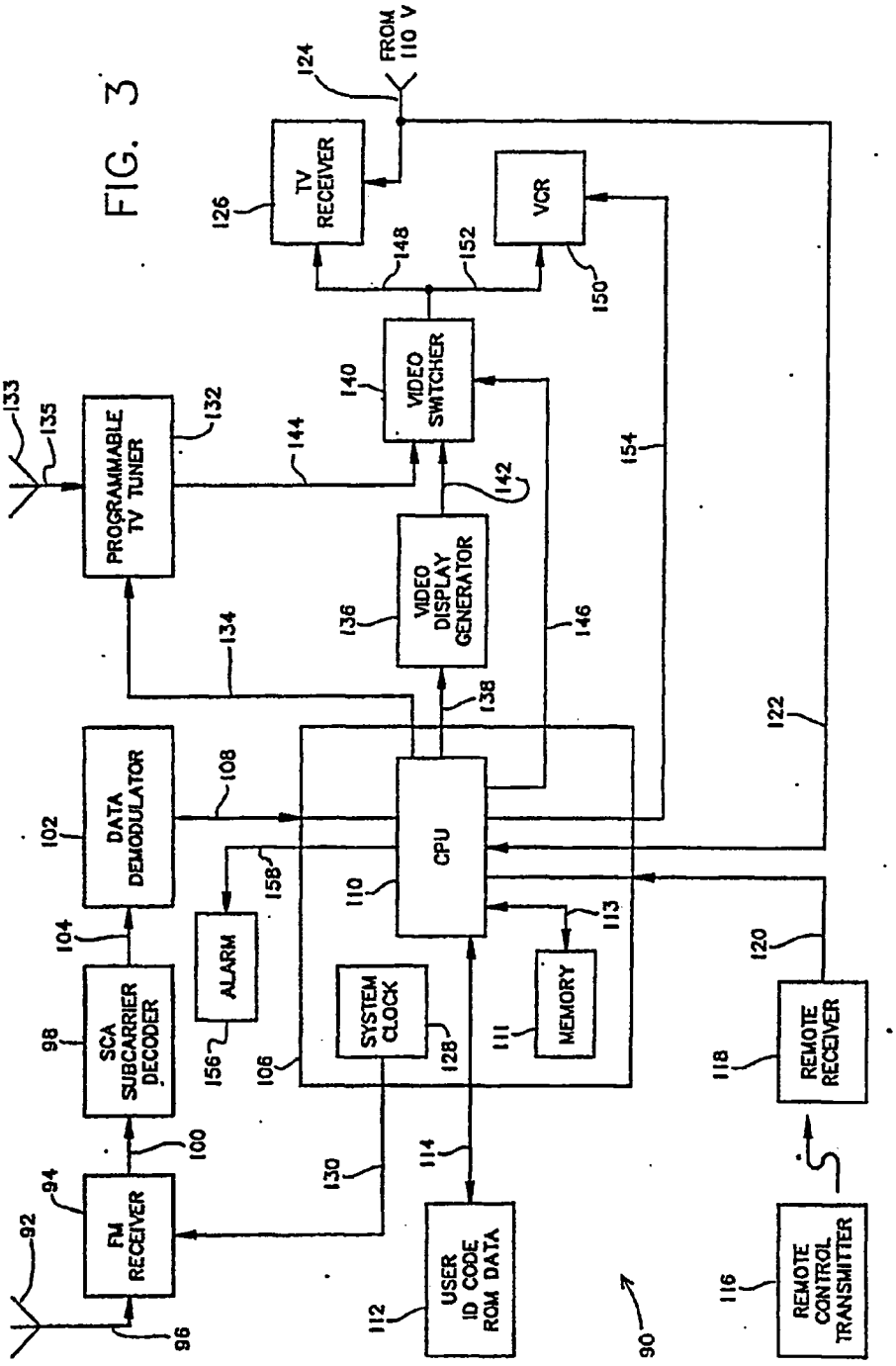

TMS 0001293

A 132

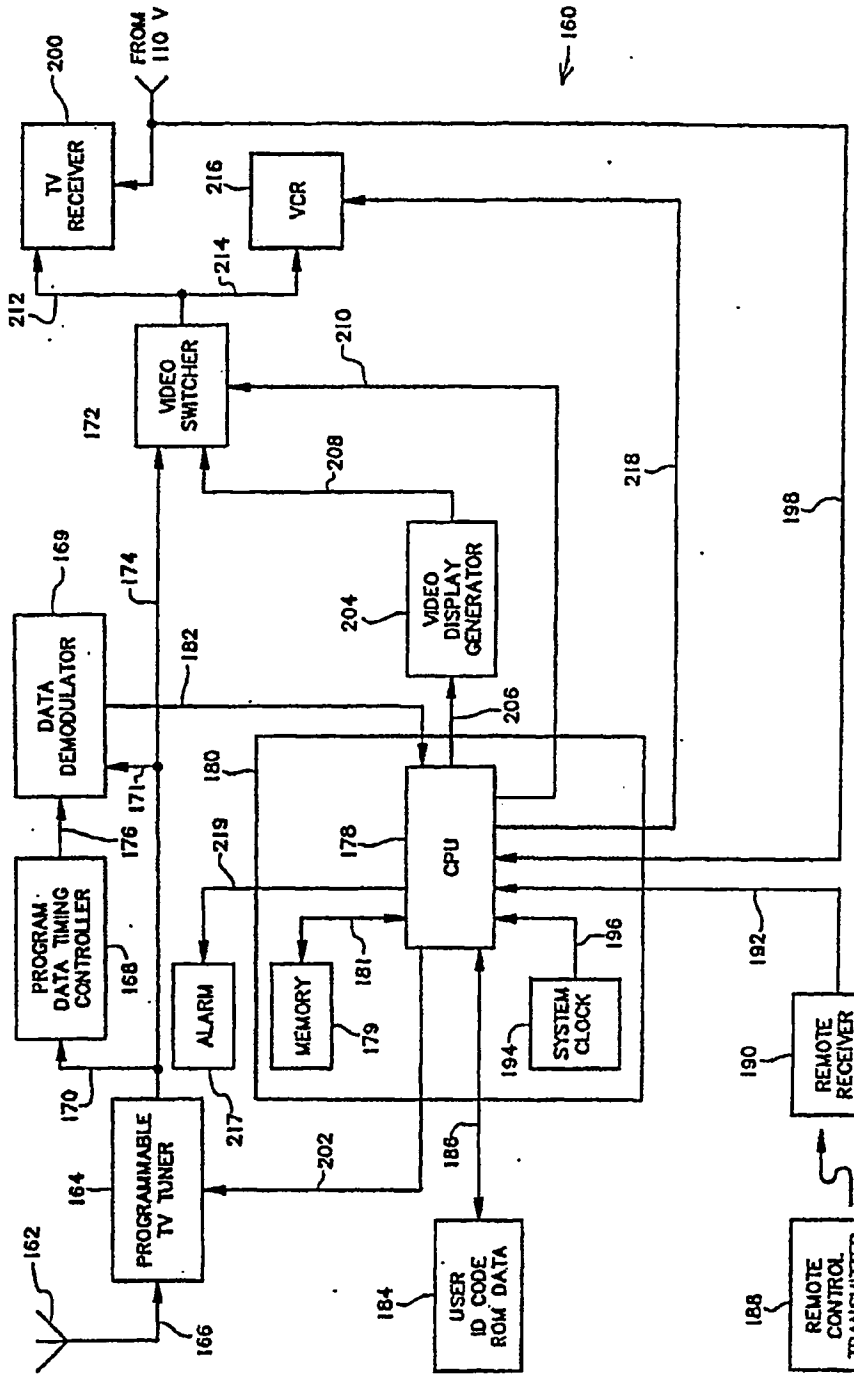
160
200
FROM 110 V
TV RECEIVER
216
VCR
214
212
VIDEO SWITCHER
210
172
208
218
198
169
174
DATA DEMODULATOR
204
VIDEO DISPLAY GENERATOR
182
206
180
171
176
219
178
CPU
PROGRAM DATA TIMING CONTROLLER
168
ALARM
MEMORY
181
179
196
SYSTEM CLOCK
194
192
190
REMOTE RECEIVER
170
217
202
186
164
PROGRAMMABLE TV TUNER
162
166
184
USER ID CODE ROM DATA
188
REMOTE CONTROL TRANSMITTER

FIG. 4

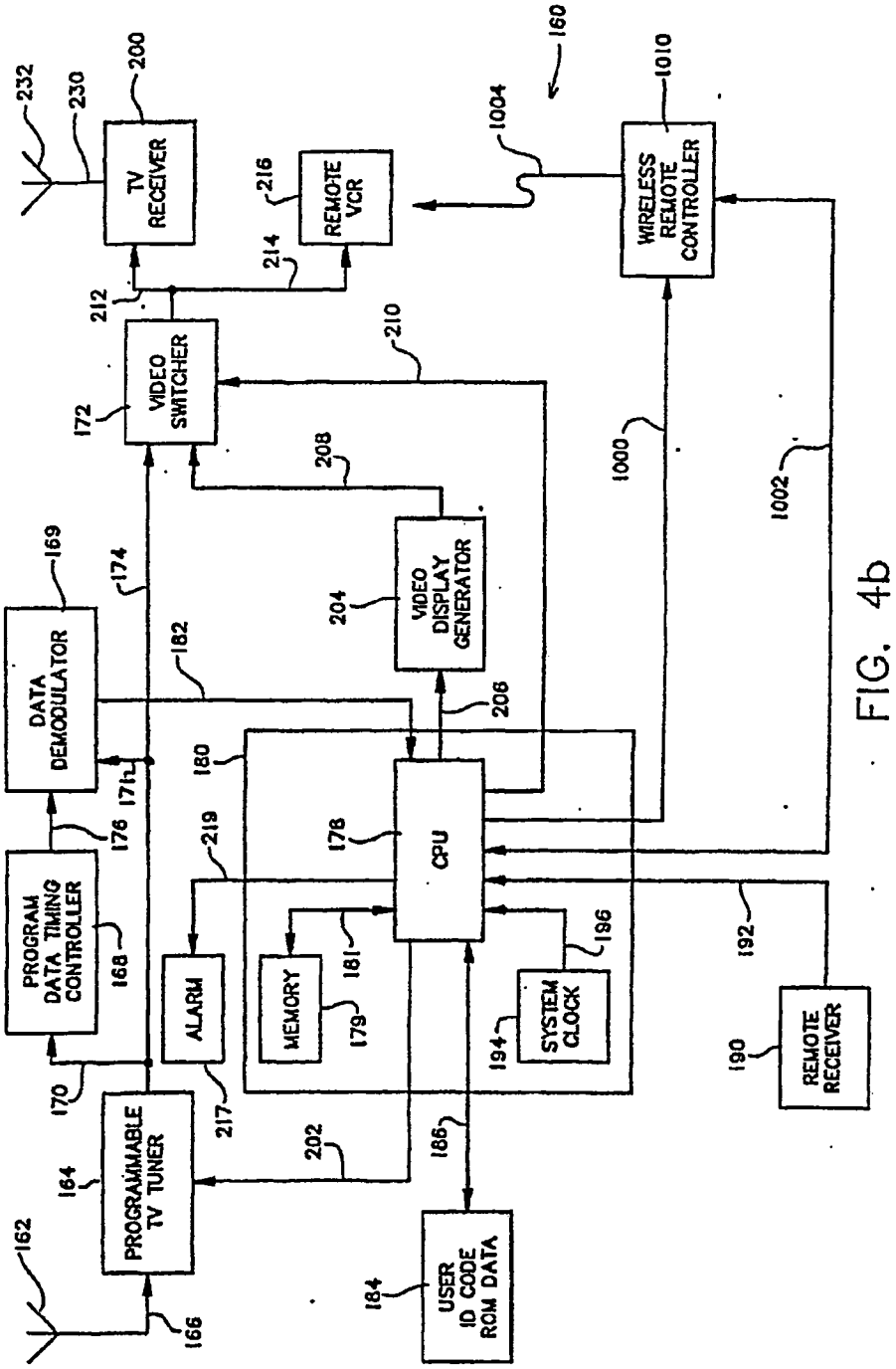

FIG. 4b

TMS 0001295

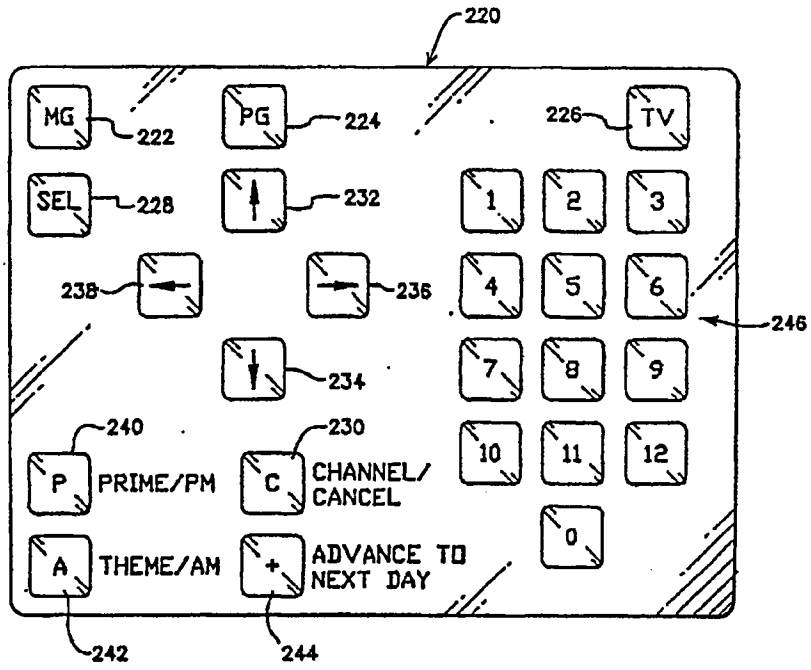
220
MG
222
PG
224
226
TV
SEL
228
232
1
2
3
238
236
4
5
6
246
234
7
8
9
240
230
10
11
12
P
PRIME/PM
C
CHANNEL/
CANCEL
0
A
THEME/AM
+
ADVANCE TO
NEXT DAY
242
244

FIG. 5

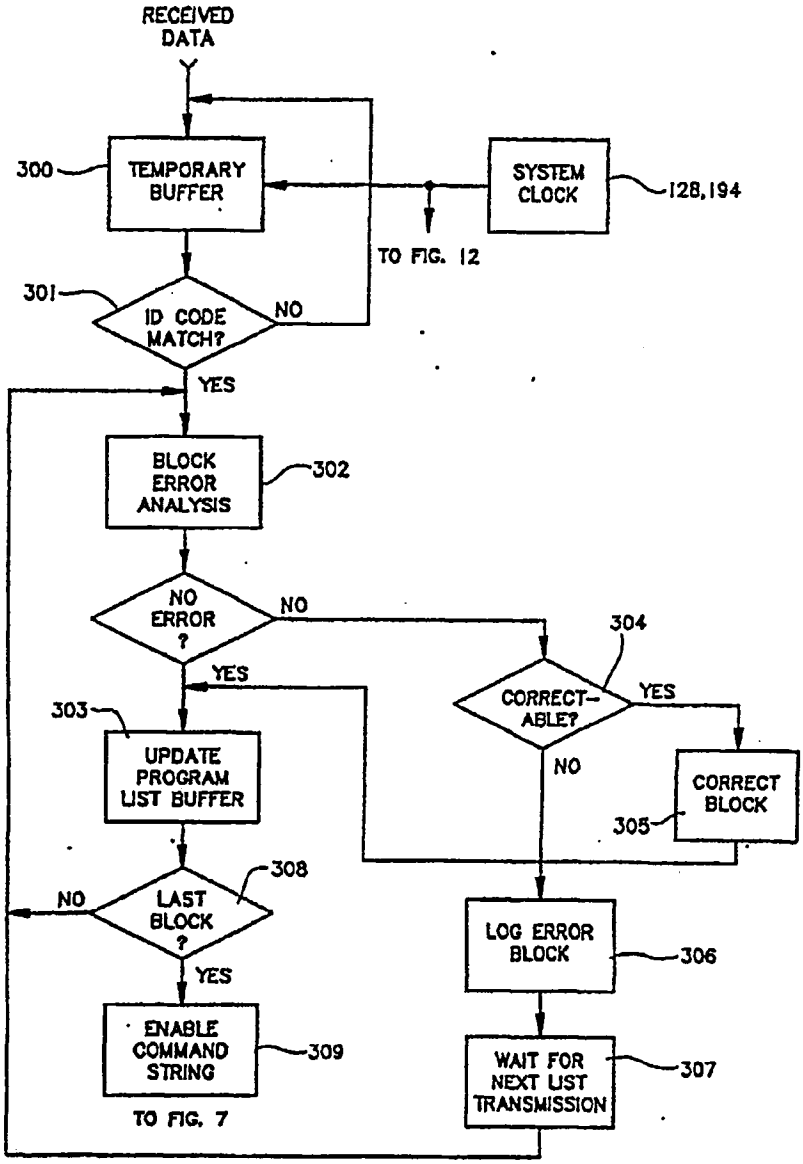

FIG. 6

TMS 0001297

A 136

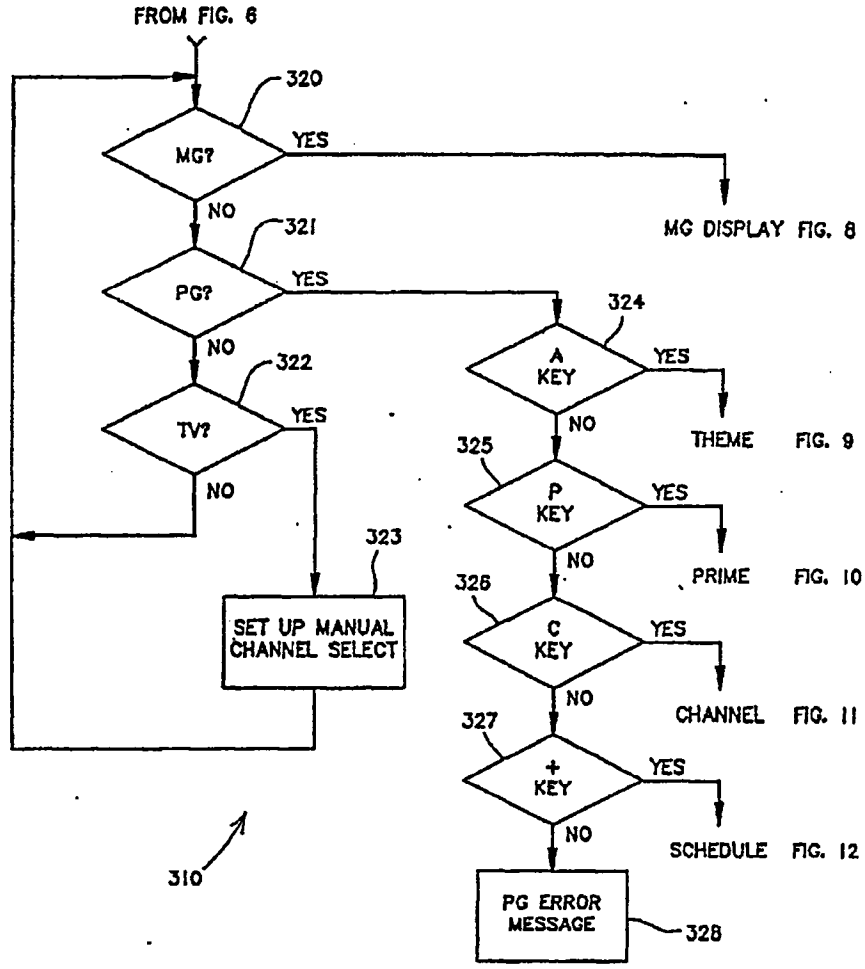
FROM FIG. 6
320
MG?
YES
NO
MG DISPLAY FIG. 8
321
PG?
YES
NO
324
A KEY
YES
NO
THEME FIG. 9
322
TV?
YES
NO
325
P KEY
YES
NO
PRIME FIG. 10
323
SET UP MANUAL CHANNEL SELECT
326
C KEY
YES
NO
CHANNEL FIG. 11
327
+ KEY
YES
NO
SCHEDULE FIG. 12
PG ERROR MESSAGE
328
310

FIG. 7

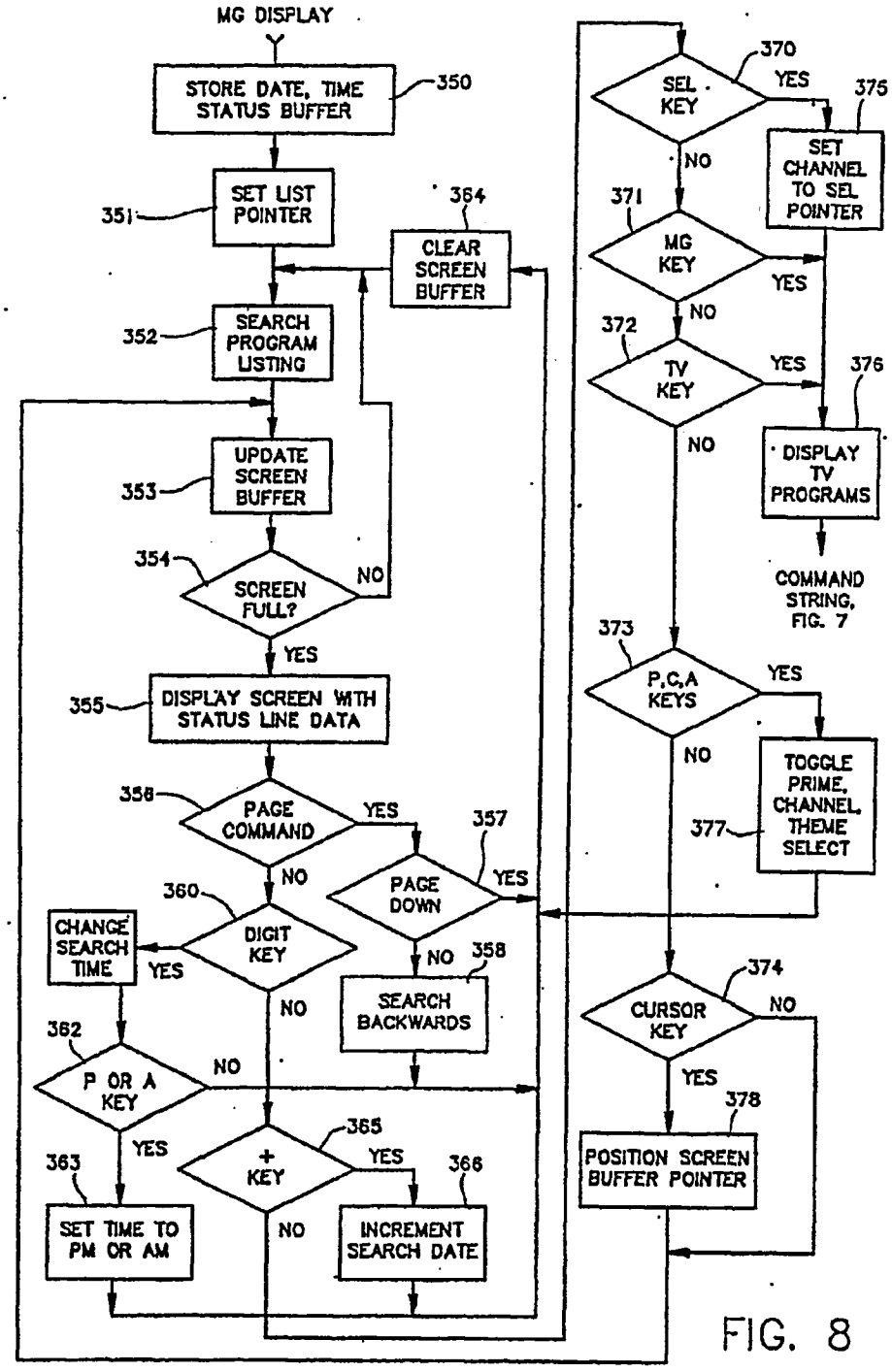

FIG. 8

TMS 0001299

A 138

FIG. 9

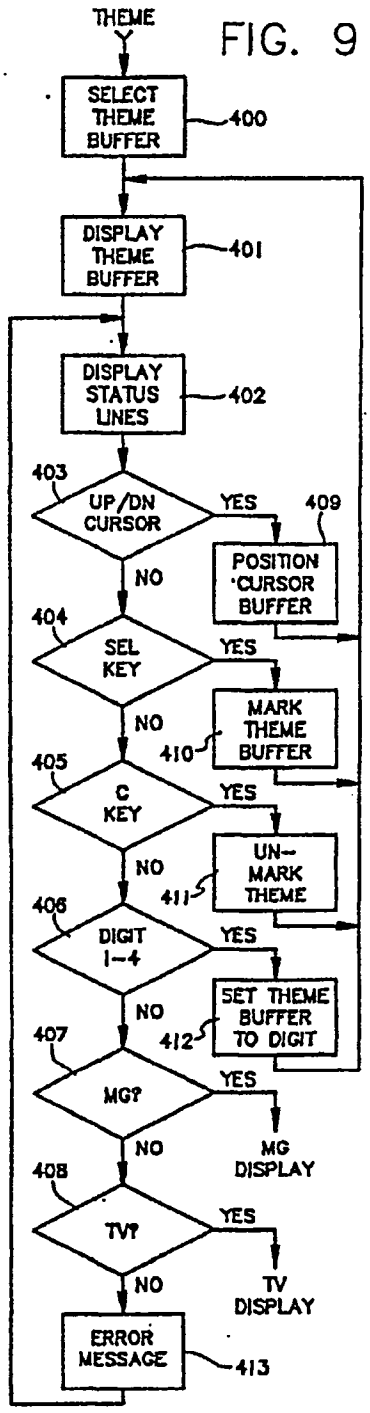

FIG. 10

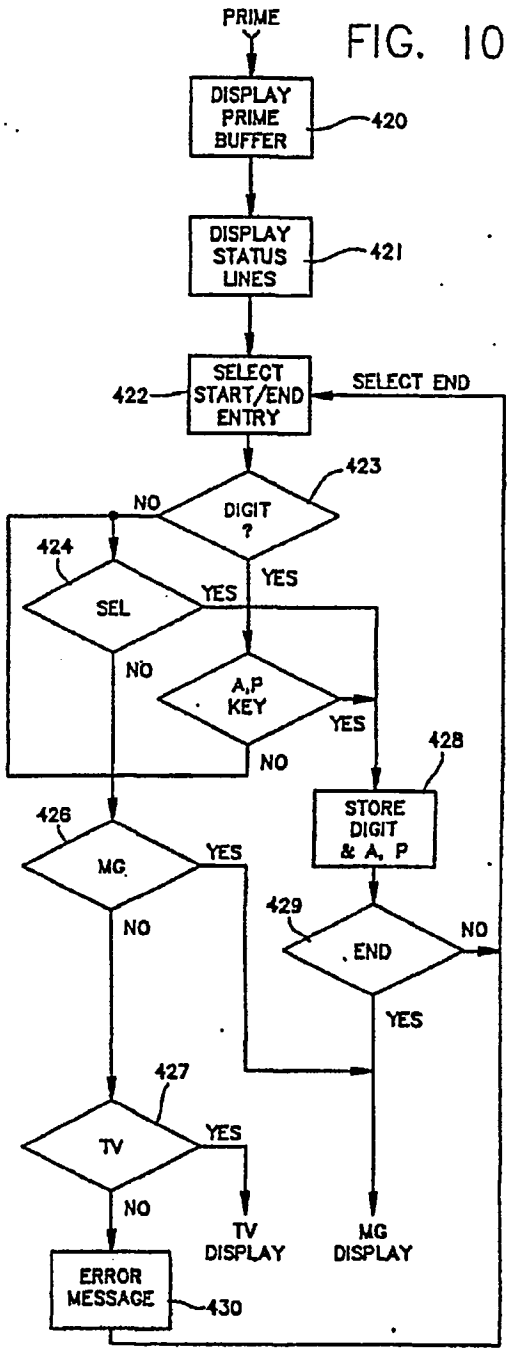

TMS 0001300

FIG. 11

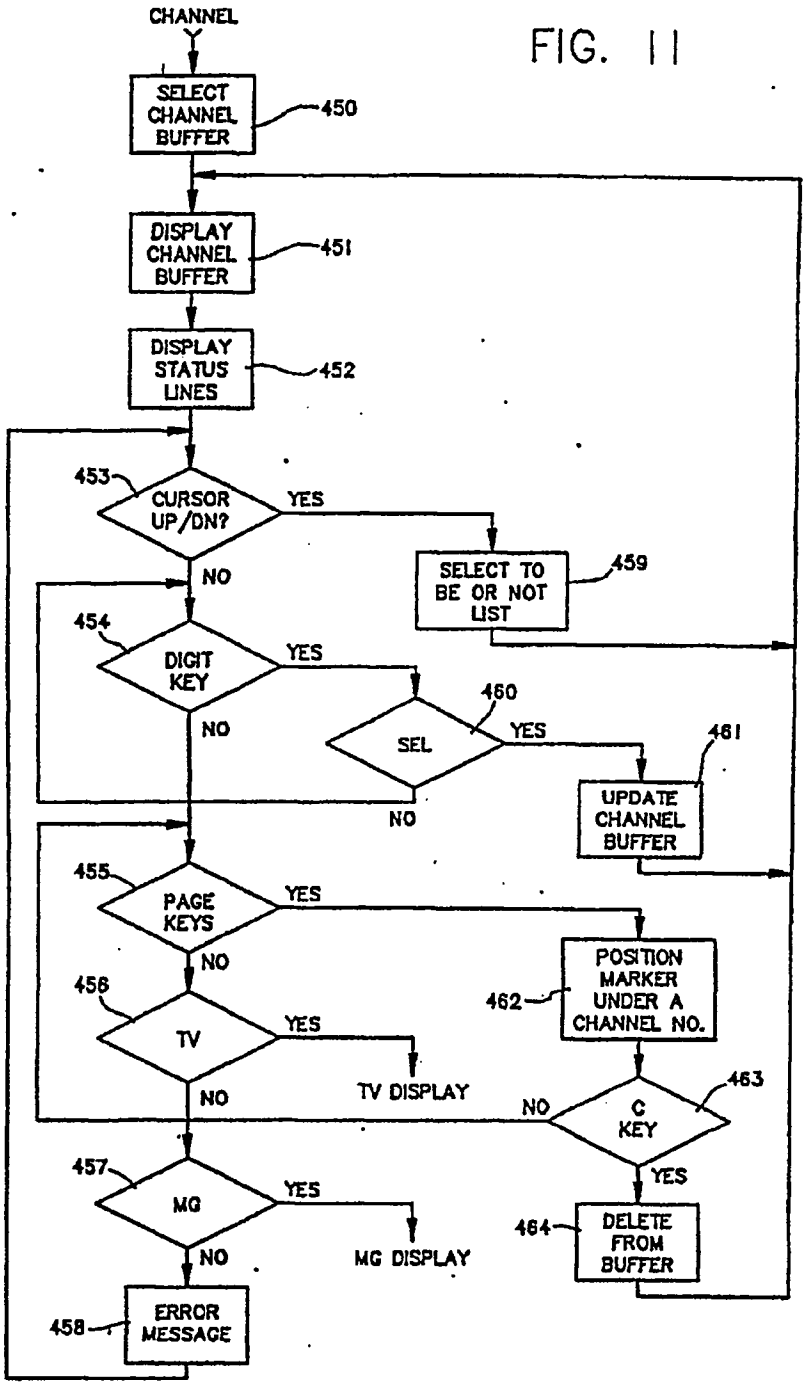

TMS 0001301

A 140

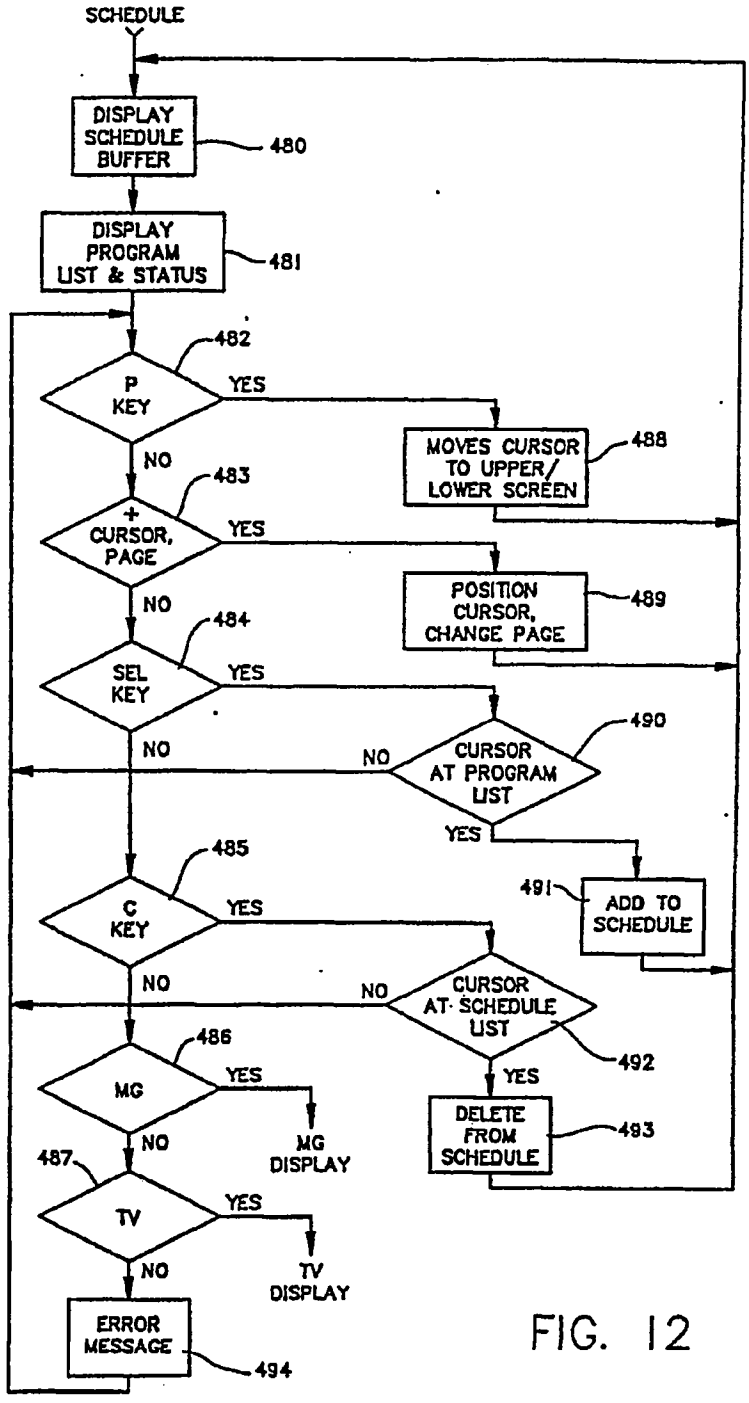
SCHEDULE
DISPLAY SCHEDULE BUFFER
480
DISPLAY PROGRAM LIST & STATUS
481
482
P KEY
YES
NO
MOVES CURSOR TO UPPER/ LOWER SCREEN
488
483
+ CURSOR, PAGE
YES
NO
POSITION CURSOR, CHANGE PAGE
489
484
SEL KEY
YES
NO
490
CURSOR AT PROGRAM LIST
NO
YES
485
C KEY
YES
NO
491
ADD TO SCHEDULE
CURSOR AT SCHEDULE LIST
NO
492
YES
486
MG
YES
NO
MG DISPLAY
DELETE FROM SCHEDULE
493
487
TV
YES
NO
TV DISPLAY
ERROR MESSAGE
494

FIG. 12

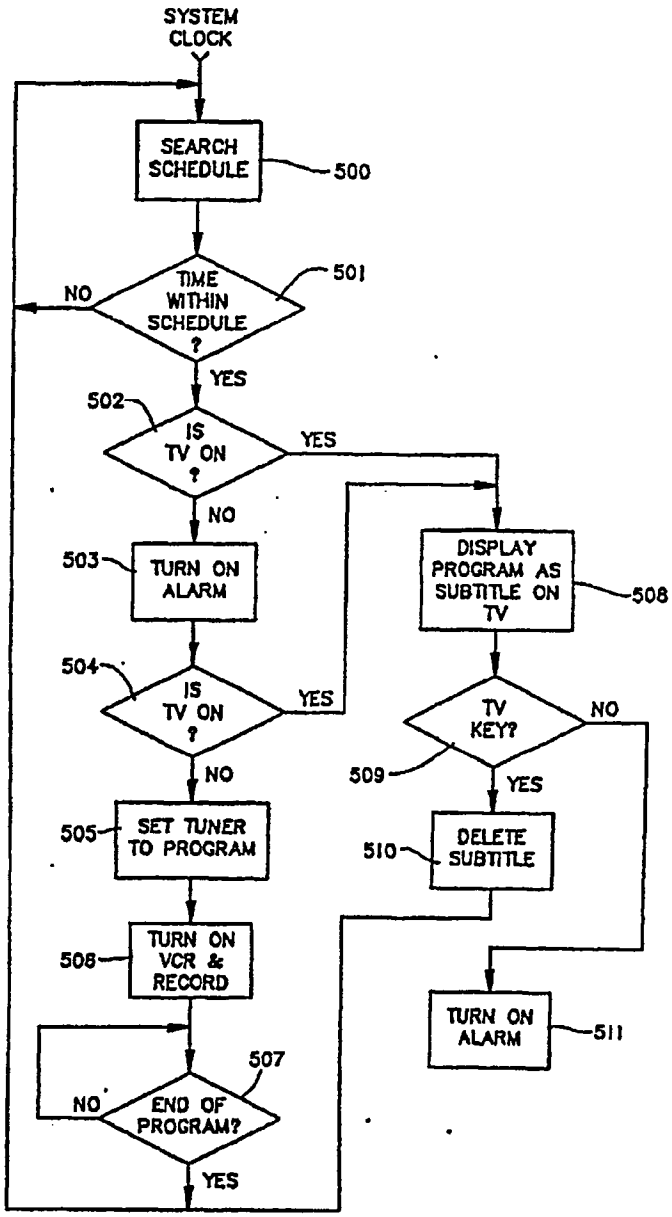

FIG. 13

TMS 0001303

A 142

TV SCHEDULE SYSTEM AND PROCESS

ORIGIN OF THE APPLICATION

This application is a continuation-in-part of my application Ser. No. 754,630, filed July 12, 1985, now abandoned.

BACKGROUND OF THE INVENTION

1. Field of the Invention

This invention relates to an electronic system and a process for controlling a television set to present programs selected in advance from a schedule by a user. More particularly, it relates to such an electronic system and process which allows the user to make the broadcast program selection using selection criteria that can be combined in different ways. Most especially, the invention relates to such an electronic system and process which receives the schedule information in broadcast form and then processes the schedule information to make the selections. The invention further relates to a system that will enable a user to program a video cassette recorder (VCR) for unattended operation by making a simple selection from a menu.

2. Description of the Prior Art

A variety of electronic systems which can be connected to a conventional television receiver to increase the functionality of the receiver are known in the art. For example, systems that will allow a user to select teletext messages broadcast as auxilliary information in otherwise unused portions of conventional television broadcasts are disclosed in U.S. Pat. No. 4,186,413, issued Jan. 29, 1980 to Mortimer; U.S. Pat. No. 4,288,809, issued Sept. 8, 1981 to Yabe, and U.S. Pat. No. 4,361,848, issued Nov. 30, 1982 to Poignet et al. A variety of other electronic systems for controlling television sets or other related applications are disclosed in the following additional issued patents: U.S. Pat. No. 4,205,343, issued May 27, 1980 to Barrett; U.S. Pat. No. 4,225,967, issued Sept. 30, 1980 to Miwa et al.; U.S. Pat. No. 4,290,062, issued Sept. 15, 1981 to Marti et al.; U.S. Pat. No. 4,430,669, issued Feb. 7, 1984 to Cheung; and U.S. Pat. No. 4,506,387, issued Mar. 19, 1985 to Walter.

As the number of television stations in a metropolitan area or on a cable network has increased, a larger number of programs of potential interest to a viewer is presented. With the use of dish antennas capable of receiving direct satellite signals, the multitude of programs available to the viewer is further increased. At the present time, the user must consult a published program guide, such as TV Guide Magazine or program listings published in newspapers, in order to select programs for viewing. Particularly if the viewer is interested in a special category of program broadcast at irregular intervals, such as tennis tournaments, being aware of programs of special interest and selecting them for viewing is often difficult. Should the viewer find a program of interest which is broadcast at a time when the viewer will be unable to view the program, the user must then set a VCR or other recording device to record the program for viewing at a more convenient time. Often, a viewer will notice a program of special interest in the program listing, but forget to select the appropriate channel for viewing at the time of broadcast or set the VCR to record the program, or the length of the program for proper operation of the VCR to record the program. If there is more than one program to be recorded, it is easy to select programs with

conflicting time schedules, with two or more programs overlapping each other. Conventionally published program listings are not capable of handling last minute schedule changes and additions. For these and other reasons, it would be advantageous if the viewer could select and view, or perform unattended recording of programs of interest in an easier and more dependable fashion.

Significant problems are encountered by users of VCRs as presently operated. Programming a VCR for unattended operation requires considerable skill and care. It is necessary to select the station, the day of the week, the time, including a.m. or p.m., and the length of the program for each program to be recorded. The process is even more complex if the user wishes to set the VCR for automatic recording of a program in the future at a given time while watching another program at the same time. Mary VCR owners are unable to master the complexities of setting the VCR for unattended operation, and simply do not use that feature of the equipment. Almost all users, at one time or another, have recorded the wrong program through an inadvertent incorrect setting of the VCR.

While a variety of systems incorporating VCRs and VCR control systems are known in the art, none deal with the complexity of setting a VCR for unattended recording. U.S. Pat. No. 4,523,295, issued June 11, 1985 to Zato discloses a VCR control system including a nonvolatile memory for storing user programmed system timing information in the event of a power outage. Other systems including VCRs are disclosed in the following issued U.S. Pat. Nos.: 4,272,791, issued June 9, 1981 to Rifken and U.S. Pat. No. 4,530,048, issued July 16, 1985 to Proper.

In most metropolitan areas, a large variety of cable programming is available. Since a cable channel will provide its signal on different numbered channels in different areas, depending on which channels are otherwise unused, programming for the cable channels is disseminated on a national or regional basis by the name of the channel, rather than the particular channel number on which the signal is supplied, while the television set must be tuned by the channel number. In the San Francisco metropolitan area, for example, there are presently 15 different cable channels that are listed by name, not channel number. A viewer will often not remember the channel number on which a given cable service is furnished, especially if that service is only watched occasionally. U.S. Pat. No. 4,405,946, issued Sept. 20, 1983 to Knight, discloses a system for providing an on-screen display of channel numbers or an indication that a signal is coming from a recording device, but with no teaching or suggestion of displaying a cable channel by name rather than number.

When satellite broadcasts are considered, the situation becomes even more complex. Satellite TV guides list all programs of satellites broadcast in the U.S. by the hour. Fifty or more programs may be listed under each hour or half hour heading. Depending on such factors as geographic location and equipment capability, many users will only be able to receive a small fraction of the listed programs. It would be desirable for a user to be able to reduce the number of such listings to be consulted in making a program selection. It would also be desirable for the viewer to be able to eliminate listings for encrypted programs for which the user is not a subscriber.

SUMMARY OF THE INVENTION

Accordingly, it is an object of this invention to provide a system and process which allows a user to control a television set by selecting broadcast programs for viewing from schedule information with user-supplied selection criteria.

It is another object of the invention to provide such a system and process which receives the schedule information as a broadcast.

It is another object of the invention to provide such a system and process which is capable of accommodating last minute schedule changes and additions.

It is a further object of the invention to provide such a system in which the user supplied selection criteria can be combined by the system to make program selection.

It is a still further object of the invention to provide such a system and process in which the selection criteria can be either criteria of inclusion or exclusion.

It is another object of the invention to provide such a system and process in which the need to make manual channel selection is eliminated and all programs are selected by pointing to menu items.

It is still another object of the invention to provide such a system and process which will determine if the television set is turned on at the time of the selected broadcast program and automatically supply the selected program to a VCR or other program recording device if the television set is not turned on.

Independently of the television set, it is another object of the invention to provide greatly simplified and reliable unattended recording of television programs.

It is a still further object of the invention to provide such a system and process which is capable of selecting a single program in a multiple program series and automatically including the rest of the programs in the series.

It is another object of the invention to provide such a system and process which will automatically terminate selection of a series of programs when the last program of the series has been completed.

It is yet another object of the invention to provide such a system and process which will automatically perform unattended recording of a program of uncertain length, such as a sporting event, and terminate the recording as soon as the program of uncertain length has been completed.

It is a further object of the invention to provide such a system and process which will allow certain programs and/or channels to be excluded from the selection unless the user enters a coded password.

It is still another object of the invention to provide such a system and process in which such user selections are used for unattended, automatic operation of a VCR or other recording device.

It is a still further object of the invention to provide such a system and process controlling a VCR in which the user selections are used for automatic, preselected recording of one program on a VCR while the user is viewing another program on a television set.

It is yet another object of the invention to provide such a system and process in which all parameters of a program for viewing and/or recording can be set with a single user selection.

It is a further object of the invention to provide such a system and process in which the user is not required to leave the VCR powered on for unattended recording.

It is a still further object of the invention to provide such a system and process in which the user is notified of conflicting time schedules for programs selected for viewing and/or recording.

It is another object of the invention to provide such a system and process in which a user identification system is employed to ensure pay subscription to the TV schedule system.

It is still another object of the invention to provide such a system and process in which special program linking and theme information is broadcast in order to allow easier program selection by the user.

It is a further object of the invention to provide such a system and process in which actual names of channel services, such as HBO, ESPN and the like, are displayed to the viewer and by which the viewer may select the channel service, in place of channel numbers on which such services are supplied.

It is still another object of the invention to provide such a system and process in which unique schedule data, such as linking, theme, satellite and channel name, satellite encryption, scrambled transmission, is supplied as a basis for the user to select listings for viewing and/or recording.

It is a still further object of the invention to provide such a system and process in which the length of time since a program being broadcast has started and how much time remains for the program is displayed to the user when the user turns on the program.

The attainment of these and related objects may be achieved through use of the novel electronic system and process for controlling a television receiver to allow user selection of broadcast programs herein disclosed. As used herein, the term "broadcast" refers not only to transmission by airwaves, but also to other forms of transmission, such as by cable. A system for controlling a television receiver to allow user selection of broadcast programs from schedule information in accordance with the invention includes a data processor. A first input means for the schedule information is connected to the data processor. A second user selection input means is also connected to the data processor. The data processor is configured to select programs from the schedule information based on user inputs. A storage means is connected to receive the schedule information for programs selected by the data processor. A programmable tuner is provided for connection to the television receiver. The programmable tuner is connected to receive control signals from the data processor for causing the programmable tuner to supply broadcast signals for the selected programs to the television receiver at the time of the selected program broadcasts.

The process of this invention includes the following steps. Program schedule information is supplied to a data processor. User program selection criteria are supplied to the data processor. The user selection criteria are used to select programs for viewing from the program schedule information in the data processor. The stored information is used to tune the television receiver to the selected programs.

In a preferred form of a system and process in accordance with the invention, the schedule information is also broadcast, either during an otherwise unused portion of a conventional television broadcast, such as during a horizontal or vertical flyback interval, or as a separate broadcast, such as a frequency modulation (FM) broadcast. The preferred system includes a video display generator connected to receive signals from the

data processor for generating a video display from the schedule information and the user selections on the television receiver. The video display generator is connected to supply video display signals to a video switcher. The programmable tuner is also connected to supply the broadcast program signals to the video switcher. The data processor is configured and connected to control the video switcher to supply the broadcast program signals and/or the video display signals as required in operation of the system to the television receiver. In its preferred form, the data processor of the system is further configured to provide signals to the video display generator for presenting a plurality of user selection menus on the television receiver. The second user selection input means includes a plurality of keys for making selections from the menus for use in choosing programs from the scheduled information.

Once the system has been used by a viewer to make program selections on the basis of the viewer selected criteria, the system operation can be purely automatic, so that programs of special interest are not missed through forgetfulness. Because the system will search through a volume of schedule information to find programs meeting the viewer's selection criteria, the program selection is much easier and more rapid with the system of this invention than with manual selection. By way of example, the system can be used to select satellite programs from a larger list of satellite programs by user selected satellite symbols, such as F1 or AB, to be displayed by the scheduler, eliminating most of the program listings that are of no value to the viewer. Similarly, for viewers without special decryption service, the system will remove from display those satellite listings which are of no value to the viewer because they are encrypted.

In another aspect of the invention, the system can be automatically linked to a VCR, so that menu selection of programs to record replaces the often confusing techniques required to the unattended operation features of the VCR. By selecting a desired program for recording from a menu display, the chance for error is practically eliminated. The viewer can verify the programs to be recorded by a display of the names of the programs. In the event of a schedule change at the station, the system will automatically update the schedule change and revise the time of the unattended recording. In one form of this aspect of the invention, the system is connected to the remote control facilities of a VCR to turn on its power, start the recording, and stop recording of programs on the VCR. The user is therefore not required to leave the VCR powered on for unattended recording. In this manner, a conventional remote control VCR is connected in the system without modification for unattended recording of scheduled programs.

The attainment of the foregoing and related objects, advantages and features of the invention should be more readily apparent to those skilled in the art after review of the following more detailed description of the invention, taken together with the drawings, in which:

BRIEF DESCRIPTION OF THE DRAWINGS

FIG. 1 is a block diagram of a transmitter for use with a system and process in accordance with the invention.

FIG. 2 is a block diagram of another transmitter for use with another embodiment of a system and process in accordance with the invention.

FIG. 3 is a block diagram of a system in accordance with the invention for use with the transmitter of FIG. 1.

FIG. 4 is a block diagram of another system in accordance with the invention for use with the transmitter of FIG. 2.

FIG. 4B is a block diagram of a modified form of the system in FIG. 4, which also is used with the transmitter of FIG. 2.

FIG. 5 is a plan view of a control panel used in the systems of FIGS. 3-4.

FIGS. 6-13 are flow charts of software used with the systems shown in FIGS. 3-4.

DETAILED DESCRIPTION OF THE INVENTION

1. General System and Process Description

Turning now to the drawings, more particularly to FIG. 1, there is shown a frequency modulation (FM) transmitter 20 for supplying TV schedule information as an FM broadcast. This form of a transmitter allows the necessary schedule information to be broadcast independently of the television broadcasts themselves. Other than making schedule information available to the provider of the FM broadcasts, this form of transmission does not require the cooperation of the television networks or stations. The transmitter 20 includes a microcomputer 22, connected by means of a serial input/output (I/O) port 24 to data modulator 26 by means of line 28. The microcomputer 22, which may be implemented with essentially any commerically available microcomputer, such as an IBM PC/AT or compatible, supplies the television schedule information as digital output signals to the data modulator 26. The data modulator 26 converts the digital outputs of the microcomputer 22 to a form in which they can be used to generate FM signals. The output of data modulator 26 is supplied to an FM modulator 30 on line 32. The FM modulator 30 generates a set of frequency modulated signals corresponding to the data, which are supplied to an SCA subcarrier generator 34 on line 36. The generator 34 produces the SCA subcarrier and applies the frequency modulated signals to the SCA subcarrier. The output of generator 34 is supplied to an FM exciter 38 on line 40. The exciter 38 generates the required FM broadcast signals, which are supplied to an RF power amplifier 42 on line 44. The power amplifier amplifies the FM broadcast signals and supplies them to transmitting antenna 46 on line 48. The data modulator 26, FM modulator 30, SCA subcarrier generator 34, FM exciter 38 and RF power amplifier 42 are all implemented with commercially available system components conventionally employed for broadcast of data processing information signals. Since the design and implementation of the system 20 is itself conventional, and the novelty resides in the particular data processing information signals broadcast with the system 20, the design and operation of the system 20 will not be described in further detail.

FIG. 2 is a block diagram of a similar system 50 that is used to broadcast the television schedule information as part of an otherwise conventional television broadcast, using a normally unused portion of the TV frame, such as the horizontal or vertical flyback. The I/O port 24 of the microcomputer 22 is connected by line 52 to a buffer 54, which converts the digital schedule information signals supplied by the microcomputer to a form suitable for FM modulation. The output of buffer 54 is

supplied to an FM modulator 56 on line 58. The frequency modulated schedule information signals are provided by the modulator 56 for incorporation in the unused portion of the television broadcast in a transmitter video input unit 60 on line 62. Signals for a TV program to be broadcast are also supplied to the video input unit 60 on line 64 and to an insertion controller 66 on line 68 by program source 69, consisting of TV guide data as well as identification codes, in the case of pay subscriber service. The identification code is a unique 6 or 7 digit code for every subscriber. By deleting the identification code, an unpaid subscriber is prevented from receiving the TV guide data. The insertion controller 66 utilizes the program signals to generate synchronizing signals for the unused portions of the TV frame, which are supplied to the buffer 54 and the modulator 56 on lines 72 and 74, respectively. The combined program and schedule information broadcast signals are supplied by the transmitter video input unit 60 to a power amplifier 76 and an RF multiplexer 78 on lines 80 and 82, respectively. The amplified broadcast signals are supplied by amplifier 76 to a transmitting antenna 84 on line 86. The broadcast signals are supplied by multiplexer 78 as cable television signals at output 88. As in the case of the system 20, the system 50 is implemented with conventional system components. The system 50 is of a type conventionally employed for the broadcast of teletext signals in unused portions of a television program broadcast signal, and the novelty resides in the particular teletext signals broadcast in this manner. The design and operation of the system 50 will therefore not be explained in further detail.

FIG. 3 is a block diagram of a receiver and television receiver control system 90 which is used in combination with the FM transmitter system 20 of FIG. 1. An FM antenna 92 receives the broadcast signals from the system 20, which are supplied to FM receiver 94 on line 96. FM receiver 94 supplies the FM broadcast signals to an SCA subcarrier decoder 98 on line 100. The decoder 98 strips the schedule information signals from the FM broadcast signals and supplies the schedule information signals to a data demodulator 102 on line 104. The data demodulator 102 converts the schedule information signals to digital form and supplies the digital schedule data signals to system control unit 106 on line 108, more particularly, to CPU 110 of the system control unit 106. A memory 111 is connected to the CPU 110 at 113. A control program for the system control unit 106 and a user identification code are stored in a read only memory (ROM) 112. ROM 112 communicates with the CPU 110 on line 114. Other inputs to the CPU 110 are supplied by a remote transmitter controller 116-remote receiver 118 combination on line 120, which supplies user selection and other user inputs to the CPU 110, and on line 122, connected to power input 124 of television receiver 126, which allows CPU 110 to determine if the receiver 126 is turned on. System clock 128 of the system control unit 106 is connected to the FM receiver 94 by line 130.

The CPU 110 supplies control outputs, based on user selections, to a programmable TV tuner 132 on line 134. Information identifying programs selected from the schedule information on the basis of the user selection criteria is stored in memory 111 by the CPU 110. The CPU retrieves the information at the appropriate time for generating the control outputs. The tuner receives conventional TV broadcast signals from antenna 133 on line 135. The CPU 110 supplies information signals from the program schedule data on line 108, control program inputs on line 114 and user inputs on line 120 to a video display generator 136 on line 138. Output video display signals from the generator 136 are supplied to a video switcher 140 on line 142. The video switcher also receives TV program signals from tuner 132 on line 144, and a control signal for switching between the tuner 132 and the generator 136 on line 146 from the CPU 110. The video switcher 140 supplies the signals from the tuner 132 or the generator 142 to the TV receiver 126 on line 148 and to a video cassette recorder (VCR) 150 on line 152. The CPU 110 is connected to the VCR 150 by line 154, for turning on the VCR. For most VCRs, the line 154 should be connected to the pause input of the VCR. The CPU is connected to an alarm 156 by line 158 for indicating to a user a short time (e.g., five minutes) before a selected program is to be broadcast that the TV receiver 126 should be turned on if it is off, so that the selected program can be viewed. The operation of the receiver system 90 will be explained further in the explanation of the construction and operation of the controller 116 in connection with Figure 5.

FIG. 4 is a block diagram of another receiver system 160, which may be used with the transmitter system 50 shown in FIG. 2. Antenna 162 receives the TV broadcast signal from the transmitter system 50 and supplies it to a programmable TV tuner 164 on line 166. The tuner 164 supplies the broadcast signal to a program data timing controller 168 on line 170, to data demodulator 169 on line 171 and to a video switcher 172 on line 174. The output of controller 168 is supplied to the demodulator 169 on line 176. The demodulator 169 supplies the program schedule information signals, which have been stripped from the TV broadcast signals and digitized, to CPU 178 of system control unit 180 on line 182. A memory 179 is connected to the CPU 178 at 181 to receive selected program information and to supply the selected program information at the appropriate time for the CPU 178 to generate control signals for the programmable tuner 164. User ID code and control program inputs to the CPU are provided by ROM 184 on line 186. User program selections and other user inputs are provided by a remote control transmitter 188-remote receiver 190 combination on line 192. Other inputs to the CPU 178 are supplied by system clock 194 on line 196, and on line 198, connected to the power supply for TV receiver 200, in order to allow CPU 178 to determine if the TV receiver 200 is turned on. From the user inputs on line 192 and the control program, the CPU generates control signals for the programmable TV tuner 164, which are supplied on line 202, and video display information signals, which are supplied to video display generator 204 on line 206. The generator 204 converts the video display information signals to video display signals, which are supplied to the video switcher 172 on line 208. The CPU 178 supplies control signals for the video switcher 172 on line 210 to switch the video signal outputs of the video switcher 172 on lines 212 and 214 to the TV receiver 200 and VCR 216 between the schedule information video signals from generator 204 and the program video signals from tuner 164. The CPU 178 provides a control signal for turning on the VCR on line 218 when a desired television program signal is being received by tuner 164 and CPU 178 determines from the input on line 198 that TV receiver 200 is not turned on. The CPU 178 is connected to alarm 217 by line 219 for providing an audible signal to a user shortly before broadcast of a selected program if

the TV receiver 200 is turned off, as a signal to turn it on. The operation of the cable TV or TV program receiver system 160 will be described further below in connection with FIGS. 5–13.

FIG. 4B is a block diagram of a modified form of the receiver 160, which may also be used with the transmitter system 50 shown in FIG. 2. In the FIG. 4B receiver 160, a remote VCR 216 and its wireless remote controller 1010, so that the remote VCR 216 need not be powered up in advance of unattended recording. The remote controller 1010 is connected by lines 1000 and 1002 to CPU 178. In response to the CPU 178, the remote controller 1010 transmits control signals to the remote VCR 216 in a conventional manner, as indicated at 1004. The remote controller 1010 can be either a unit designed for the VCR, but modified to be electrically operated from the TV scheduler, or it can be an equivalent design of the remote controller with direct connections to the CPU 178. Instead of enabling the VCR from the pause line 214, when the CPU 178 determines that a program is to be recorded (see, e.g., block 501 of FIG. 13) according to the selected programs, it issues a control signal to power up the VCR on control line 1000. This control signal generates a contact closure across the switch matrix of the remote controller 1010 power-on key. The contact closure may be obtained with a relay or an FET transistor switch. The control signal on line 1000 also generates a contact closure across the play key and the record key of the controller 1010 to initiate recording of the program. When the program ends, CPU 178 will issue a control signal on line 1002. Line 1002 generates a contact closure across the remote controller power-off key. When the CPU 178 determines another program is to be recorded, the above process is repeated.

In order to carry out background recording of a program while watching another program on the TV receiver 200, line 212 is connected to the AUX input of the TV set 200. To receive a normal broadcast while using the TV scheduler to record TV programs in the background, the I; AUX input switch is set to connect antenna 232 to the TV receiver 200. The VCR 216 can now record the scheduled programs without interfering with normal TV viewing.

2. Summary of Keyboard Operation

FIG. 5 shows the layout of keyboard 220 used in the remote control transmitters 116 and 188 of FIGS. 3 and 4. The keys 222–244 have the following significance:

MG 222: Master Guide for direct listing and immediate selection of program.

PG 224: Program Guide for setting up stored features and accessing help information.

TV 226: Selects conventional channel selection.

SEL 228: Selects program from menu to be displayed on TV

C 230: Cancels stored program in the PG mode; toggles channel restriction on and off in the MG mode.

↑ 232: Moves pointer to top of listing; auto scrolls to previous page if pressed when pointer is on top line.

↓ 234: Moves pointer to bottom of listing; auto scrolls to next page if pressed when pointer is on bottom line.

→236: Moves to next page; pointer location unchanged. Wraps to start of week listing when last page is displayed.

←238: Moves to previous page; pointer unchanged. Wraps to end of week if listing is already at start.

P 240: If not preceded by a numeric key, P will restrict listing to prime time only. If entered after a numeric key, P indicates PM.

A 242: If not preceded by a numeric key, A will restrict listing to selected themes only. If after a numeric key, A will indicate AM.

244: Advances to the next day, hour unchanged. Wraps around by days of the week.

MG Master Guide Mode

This mode allows direct selection of a program from the listing. For the average user, the Master Guide (MG) mode is the only mode used. To access the MG mode, press the MG key 222 once: to exit mode, press the MG key 222 a second time, or use the SEL key 228 if the pointer is positioned at the desired program.

The keyboard 220 may be used as a conventional TV selector by pressing the digit keys only, when the TV scheduler 160 is in the manual mode after the TV key is pressed. When used as a manual channel selector, each time that a new channel is selected, a channel number will appear on the bottom line of the screen. If a service name is associated with a signal received on a particular channel, the channel name will be displayed, rather than the channel number. Thus, if channel 3 is HBO, HBO will be displayed. Each time a channel is selected, a channel number or channel name, the name of the program, how long the program has been on, and how long remains for the program will appear on the bottom lines of the screen. For example, when the user scans the channel, it will show:

HBO	Prizzi's Honor	on for 55 minutes end in 35 minutes

Alternatively, the time that the show has been on and the time remaining could be shown graphically with, for example, a horizontal split bar graph. This approach can also be used when scanning program listings in the case of programs in progress at the time of the scanning.

The following is a typical screen when the MG key 222 is pressed. Listing always starts at the nearest previous half-hour. Note that the pointer always is positioned at the last selection made (Wall Street Week, in this example.)

9:00	Hotel series	Ch 7
	News	Ch 2
	Wall Street Week	Ch 17
	Movie	F2, Ch 20
9:15	Movie	HBO
9:30	Streets of SF	Ch 2

Wed. Jun 30, Prime: 6 pm 11 pm, theme 2 on
Time: 9:23 PM Channel group 2 on Time remaining: 7min., Wall Street Week

Note that screen will list 16 lines of program information not including the three status lines at the bottom of the screen. The time remaining could also be shown directly in the 16 lines of program information in the case of programs in progress. The designation "F2" is a satellite name. As shown, Prime indicates that the listing is restricted to hours between 6 pm and 11 pm. Theme 2 on indicates that theme group 2 is selected. Up to 4 groups of theme selection are available to accom-

modate 4 viewers. Channel group 2 restricts listing to channels defined under group 2. Four different channel groups are provided to accommodate different viewers. Up to 5 characters are available to indicate a program service by name.

Keys most commonly used in the MG mode. A complete detailed explanation follows:

UP 232, DOWN 234	moves pointer up or down
–> 236	moves one page forward
<– 238	moves one page backward
+ 244	moves one day forward, hour unchanged. Wraps around when last day of week is reached.
SEL 228	go to selected program (marked by pointer)
TV 226	go to conventional manual channel selection
Digits 246	used to set start time of search, else start of search will be at the nearest hour
Keys used by advanced users:	
C 230	Toggles channel listing restriction
P 240	Toggles prime time listing or sets PM
A 242	Toggles theme listing or sets AM

3. Detailed Operation in the MG mode When the MG key 222 is pressed, the TV screen will display a listing of programs starting at the nearest full hour. For example, if the time is 2:17, the display will start at 2:00. If desired, the user can enter the hour when the listing will start. For example, if 5 is entered, the listing will start at 5. Note that there is no need to enter an explicit AM or PM if the current AM or PM is same as the desired listing time. At the bottom of the screen is a two line status display, showing the actual time and date, and whether any of the search restrictions (prime, theme, and channel) are activated. If the prime is on, the prime time will limit the program listing to the prime time (specified by the user in the PG mode). If the start time is set to 6 pm, when the MG key 222 is pressed, the listing will start at 6 pm if the current time is 6 pm or earlier. If the current time is 9:05 pm, and the prime start time is 6 pm, then the listing will start at 9 pm, since a listing starting at 6 pm is not particularly useful.

Note that the user can override the prime time restriction by entering an hour digit at any time. The listing will immediately start at the override time. Also note that for the average user, the prime time need not be set. It is set to 6 pm to 11 pm by default when the Program Master is first used.

The cursor keys 232–236 can be used to select a different program. The up/down cursor keys 232–234 will move the cursor one line up or one line down at a time. When the top or the bottom of the listing is reached, the up key 234 will cause the screen to automatically display a previous one page, while the down key will cause the screen to display the next page.

To speed up listing, the left and right arrow page keys 238 and 236 may be used to go back or advance a page at a time, respectively. The cursor position is unchanged when the page keys 236–238 are used.

Once a desired program is indicated by the cursor, pressing the SEL key 228 will automatically cause the Program Master to return to the TV broadcast with the channel tuned to the selected program. The MG key 222 may also be used to return to the TV program, prior to selection in the MG mode. If the TV key 226 is pressed, the TV will return to the last manually selected program. By toggling between the MG and the TV modes, it is possible to review two programs without having to remember the channel numbers.

Example of MG Mode

To start listing at 2 pm, press the following keys:
MG 222, 2 digit key 246, P 240, SEL 228

The TV will immediately display the program next to the pointer when the SEL key 228 is pressed.

Pressing the P key 240 is optional; if omitted, the listing will be the same as the current PM or AM.

4. Program Guide (PG) Modes

For advanced users, the Program Master can be set up to list only the types of program (theme), only certain channels and only programs within a certain time, such as Prime Time. In addition, the Program Master can store weekly programs and special programs. The stored program can be used to trigger an alarm or enable a VCR without user intervention. The PG mode may be used for unattended recording of a series of programs by only menu selection, without the user having to set the VCR with channel, time, date, or length of program.

Note that the Program Master can be used without setting up any of these features. However, much of the power of the Program Master is contained in these features The PG modes are infrequently used by the average user. For advanced users, the PG modes may be re-programmed daily.

There are five sub-modes available when the PG key 224 is pressed. Each of these modes allows the user to customize the program listing. When the PG key 224 is first pressed, the following information is displayed at the bottom of the screen:

PG A	selects the theme setup mode
PG P	selects the prime time hours setup mode
PG C	selects the restrict channel listing setup mode
PG +	selects the weekly/special selection setup mode

PG A Theme Setup

When the A key 242 is pressed, a list of themes appears on the screen. The Up/Down keys 232–234 may be used to position the selection cursor next to the theme to be added to the list. The SEL key 228 is used to add to the list while the C key 230 can be used to cancel a selected theme. As each theme is selected, the cursor is enhanced by a marker identifying the themes selected. There can be up to 31 themes displayed on two pages.

Some themes, such as sports, have up to 15 sub-themes Whenever the cursor is placed alongside a theme with sub-categories, an expanded listing appears on the right of the screen. These sub-themes may be accessed using the two left/right arrow keys 238 and 236 (used for page selection in the MG mode). When the right arrow key 236 is pressed the cursor will reposition to the top of the sub-themes. One or more sub-themes can be selected using the SEL key 228 or eliminated using the C key 230. To return to the main themes, the left arrow key 238 is pressed. Alternatively, by pressing the MG key 222, the MG mode can be accessed directly. The selection made while in the PG A mode will be permanently stored.

The PG key 224 is generally ignored while in the PG mode. However, while in the sub-theme listing, the PG key 224 will return to the main theme listing. A typical theme listing is shown:

News	Football
Movies	Baseball
Sports (7) <	*Basketball
Childrens Show	Golf
Education and Science	Tennis
Financial News	Bowling
*Special Series (4)	*Racing
Travel	Boating
Foreign Language	Hunting
Game Show	Special Events
*Re-runs (ALL)	
Music	

Theme Group 2 Total no. of themes: 3
Total no of groups setup: 3

To accommodate several viewers with different theme interests, the Program Master has the facility to create up to four theme lists. To create a multiple list, after PG A is entered, enter a digit (from 1 to 4) immediately. To create another list, the user must exit the PG mode and re-enter PG A with a new digit. Note that when the user creates a numbered list, the Program Master still provides a default mode where all programs are listed (theme off mode). If no numbered list is created, the Program Master provides only two modes: theme off and theme on. Again, for the average user, this is the most common setup of the theme mode.

When the MG mode screen is displayed, the theme indicator at the bottom of the screen will list the current theme number if a numbered theme list exists. Each time the A key 242 is pressed, the theme number advances to the next theme number. For example, if there are two lists, theme 2 and theme 4, each time the A key 242 is pressed, the display shows theme 2, then theme 4, then no theme (theme off), and then back to theme 2.

The Program Master will remember the last theme setting when the Program Master is turned off, and will automatically be set to this mode when the MG key 222 is pressed.

Next to each main theme with selected sub-themes is a number indicating the number of sub-themes selected. If no sub-theme is selected, the Program Master assumes that all the sub-themes are to be displayed. In this case, the indicator will be ALL.

A sub-theme can be deleted using the C (cancel) key 230 with the cursor pointed at the sub-theme. It is possible to cancel all sub-themes by simply cancelling the main theme, using the same cursor key 232–234/C key 230 procedure.

The status lines give a summary of themes selected. Note that since the themes are listed on two pages, the summary gives the user some indication of activity of the second page.

PG P Prime Time Setup

This feature allows the user to set up the prime time schedule for restricting the listing to only programs falling within the prime time. When the MG mode is accessed, at the bottom of the screen is a status line indicating if the prime time only listing is on or off. By default, if the user does not set the prime time, the prime time is automatically set to 6 pm and 11 pm. There is only one prime time schedule for all viewers.

Enter start time: ___ (hour and A or P)
Enter end time: ___
Current Prime Time is set to: 7 pm - 1 am
Press MG, PG again, or TV to exit this mode
Only the MG key will cause the prime time to be modified

To enter the start and end time, the user keys in a digit key 246 followed by the A key 240 or the P key 242, indicating AM or PM. If no change is required of the start time, the user can skip to the end time by pressing the SEL key 228. Pressing the SEL key 228 twice will automatically exit the display back to the MG mode.

After a new time has been set, the current prime time on the status line will be changed the next time the user accesses the Prime Time mode. Pressing the TV key 226 or the PG key 224 will inhibit updating of the prime time. Only the MG key 222 will cause the prime time to be modified and stored.

Prime time, when activated, will restrict listing to the specified hours. In addition, if the current time is inside the prime time, the start of listing will be the nearest hour of the current time. For example, if the prime time is set from 7 pm to 11 pm, and the current time is 9:34, then the listing will start at 9:00 pm.

If the day command (+ key 244) is activated, the listing for the next day will always start at the beginning of prime time (7 pm in the above example) for the next day.

When the last hour specified by prime time is reached, the listing will wrap back to the start of prime time and will not advance to the next day.

PG C Channel Restriction List Setup This feature allows the user to restrict listing to the channels of interest, and also the satellite if it is a satellite broadcast. As in the case of themes, up to four different channel groups can be set up to accommodate different viewers. Alternatively, one of the list can be set up for just one or two channels of interest. To create a simple list, enter PG C. The following screen will appear;

A. Enter channels or satellite name/symbol to be listed: ____
B. Enter channels or satellite name/symbol not to be listed: ____
Note that only one of the above is allowed.
Changing from one to another will automatically delete channels of the other list.
Current channels listed: 2, 4, 5, 6, 7, 8, 9, 12, 22
Press MG, PG again, or TV to exit this mode.
Only MG will cause the changes to be updated.

To enter channels, press the digit keys 246 and enter using the SEL key 228. All single digit channels must be preceded by 0. A channel can be removed from the list by using the paging keys 236–238 to position a marker under the channel number to be deleted under the channel number or channel name to be deleted. Similarly, if satellite listing service is requested, satellite names will be listed. Satellites, as well as channels, can also be deleted from the listing using the C key 230. The C key 230 will activate the deletion. Each time a channel is deleted, the marker will advance to the next position to the right of the deleted channel.

When the channel selections are completed, the MG key 222 must be entered to store the changes. When the

PG C mode is accessed again, the current channel listing will reflect the new changes.

Note that in many cases, the channel not to be listed is a much shorter list and therefore preferred over the to be listed list. The status line will indicate either the channels listed or channels not listed as entered by the user.

To create multiple lists, follow the PG C entry with a number from 1 to 4. Any other number will display a help screen. When MG is entered, the status will show Channel Group n instead of simply Channel ON or OFF for a single restriction list. There is always a default channel mode where all channels are listed. While in the MG mode, each time the C key is pressed, the Channel Group number is changed. If there are no more Group numbers, then the default channel mode is displayed.

PG+Schedule Setup

This mode allows the user to create a weekly reminder calendar, typically for weekly series and special events of non-weekly programs. The reminder process will set an alarm if the TV is not on before a certain time before the start of the program. If the TV is not on when the program starts, the reminder process will turn on the VCR to start recording the program.

The schedule may be programmed to respond to either a single program of a series or all programs of a series. For example, a daily or weekly show may be scheduled for a particular day or for all occurrences in the program listing.

The Program Master will automatically link and schedule all programs of a series using a linking code assigned to all programs of a series by the broadcaster. For example, the NBA playoff series which occurs at an irregular time and interval may be completely scheduled just by selecting the NBA listing and assigning an ALL suffix to the listing. At the end of the series, the listing is automatically revised with the suffix, OLD. After one week, the listing will automatically be deleted, if the user has not already deleted it. If a program selection is not followed by the A key 242, the program is assumed to be one time only. The A key 242 can be pressed at any time to affect ALL responses.

When the schedule mode is entered, a split screen displays the scheduled program on the top eight lines and the program list on the bottom eight lines. This listing is identical to the MG listing, except that a shortened listing is displayed instead of 16. All other MG parameters, such as Prime, Channel, and Theme are in effect. The user should review the MG status before setting up the schedule. Up to 16 programs can be entered in the schedule listing using two pages of display. The page keys 232 and 234 are used to access the second page. Either the up or down keys 232 and 234 will toggle the schedule listing.

A typical schedule is shown below:

Hotel (ALL)		Fri 9 pm	ch 7
Dynasty (ALL)		Wed 8:30 pm	ch 4
Simon and Simon (ONLY)		Mon. 10 pm	ch 2
7:30	News		ch 2
	Evening		ch 4
	Movie: Prizzi's Honor		SHO
	Movie: 2001		AD, ch 19
8:00	Masterpiece Theater		

Wed Jun 30 5:34 pm Schedule Page 1 (status line)
Use A to enter ALL; press A again to toggle back to

-continued

ONLY

The cursor and page keys 232–238 operation is identical to the MG mode except the range is restricted to either the upper or lower half of the display. If the cursor points to the top of the program listing (line 9), the listing will scroll down a half page (eight lines). If the cursor points to the bottom of the schedule (line 8), the schedule will shift to the next page. To cross from schedule to program list, and vice versa, the P key is used. The cursor will reposition itself to the top of the new selection.

In the lower listing, the + key 244 operates as in the MG mode, advancing the listing by one day at a time. In the upper screen, the + key 244 has no effect.

To add a program to the schedule, use the P key 240 to toggle the cursor to the program listing (lower half of display). Use the cursor, page, or + keys 232–234, 236–238 or 244 to locate the desired program. Use the SEL key 228 to store the program in the schedule. The upper screen will immediately display the new addition. If the page is full, the Program Master will automatically switch to the next page. If both pages are full, the status line will show a FULL message.

To cancel a scheduled program, either to make a correction or make room for a new addition, use the P key 240 to switch to the upper display. Position the cursor to the program to be deleted, using the up/down or page keys 232–238. Press the C key 230 to cancel the program.

All changes to the schedule are effective upon pressing SEL or C, and do not require the MG key 222 to initiate update. To exit, use the MG or TV key 222 or 226.

During attended operation, when a scheduled program is activated, the name of the program will be superimposed onto the TV screen as a subtitle when the TV is first turned on. Pressing the TV key 226 will clear the subtitle. During an unattended operation, no name will be superimposed onto the screen, so that VCR recording will not be disturbed.

5. Flow Diagram Description

The following is a description of the program sequences for the CPU 110 in FIG. 3 or the CPU 178 in FIG. 4.

Received data from data demodulator 102, FIG. 3 or data demodulator 169, FIG. 4, is stored in temporary buffer 300 of FIG. 6. The buffer is enabled by the system clock 128, FIG. 3 or 194, FIG. 4 during down time of the broadcast. In another implementation, the buffer 300 is always enabled. The ID of the subscriber in ROM 112 of FIG. 3 or ROM 184 of FIG. 4 is compared with the received data, by decision block 301 of FIG. 6. If a match is found, the Program Master is ready to receive programming data. In another implementation, no ID match is required to receive the programming data.

As each block of data is received, the data integrity is verified by error checking logic at 302. If no error exists, the received data is stored in the program list buffer 303, replacing the previous program list data. If an error exists and is determined to be correctable at 304, the block is corrected at 305 and then stored in the program list buffer 303. The block error analysis 302 is based on cyclic redundancy coding to correct errors that affect short burst errors in a known manner.

If the error is determined to be uncorrectable, the number of the uncorrectable block is logged in an error log 306. The receiver is set by 307 in this case to wait for another complete transmission before terminating the program update. The microcomputer 22 of FIGS. 1 and 2 is programmed to repeat transmissions of the program list for a number of times to allow for correction of uncorrectable errors at the receiver 90 or 160 (FIGS. 3 and 4).

When the last decision block 308 detects a last block command in the transmission, update of the program listing is terminated. The CPU passes control at 309 to the command string processor 310, FIG. 7.

The command string 310 searches for closure of the MG key 222 (FIG. 5) at 320, the PG key 224 at 321, or the TV key 226 at 322. If any other keys are entered before one of these keys, the key is ignored. If the TV key 226 is entered, the manual TV channel select mode is set up at 323. The Program Guide then functions as a standard remote TV tuner.

When a channel is changed at 323, the channel number or name is inserted into the lower half of the screen for a few seconds. Video switcher 172 (FIG. 4) is controlled by line 210. When the TV frame reaches the bottom half of the screen, line 210 selects the video display generator 204 instead of the programmable TV tuner 164 as its input. The timing to actuate line 210 is derived from the program data timing controller 168 and is inputted to the CPU 178 by the data demodulator 169 output line 182. Other implementations are possible, such as insertion of the channel number or name into the video picture.

If the MG key 222 is entered, the MG mode is selected, FIG. 8. Upon entry, the system clock time and calendar is stored in the status line buffer 350. The set list pointer 351 is adjusted to the nearest hour based on the current time and date.

A search of the program listing 352 is made. The search is dependent on the status of the channel buffer, the theme buffer, the prime time buffer, and the direction of search. If the page 356 is up, the search direction is forward starting from the list pointer. If the page is down 357, the search direction will be backward 358 from the current list pointer. When the search satisfies the above criteria, the program listing is placed into the screen buffer 353. The search continues until the screen buffer is full 354 in which case the search is terminated. The status lines information is passed to the screen buffer and displayed 355 by the TV.

The CPU 110 (FIG. 3) or 178 (FIG. 5) selects the screen buffer to drive the video display generator 136 (FIG. 3) or 204 (FIG. 4), and also operates the video switcher 140 (FIG. 3) or 172 (FIG. 4) to switch the TV 126 (FIG. 3) or 200 (FIG. 4) from the programmable TV tuner 132 (FIG. 3) or 164 (FIG. 4) to the generator 136 or 204.

If a digit key 246 (FIG. 5) is detected at 360, the search time is changed to agree with the digit entered at 363. If the P or A key is detected at 362, the PM or AM of the time will be changed accordingly. The screen buffer is cleared at 364 and a new search is started with the list pointer set to the new search time.

If a + key 244 entry is detected at 365, the search date is incremented at 366, the screen buffer is cleared 364 and a new search is started with the list pointer set to the next day. The increment search date at 366 will return the start of listing date if incrementing will go beyond the last date of the programming listing.

If an SEL key entry is detected at 370, the channel of the programmable tuner 132 or 164 will be set to the channel listed at 375 at the current cursor position of the MG display. The MG mode is terminated at 376 and the TV 126 or 200 is switched by the video switcher 140 or 172 to the tuner 132 or 164.

If an MG key 222 entry is detected at 371, the MG mode is terminated at 176 and the TV 126 or 200 is switched to the channel that was set in the programmable tuner 132 or 164 before the MG mode was activated.

If a P, C or A key 240, 230 or 242 closure is detected at 373, the prime buffer, channel buffer and theme buffer are toggled off or on at 377. The screen buffer is cleared at 364, and a new search is commenced with one of the search criteria changed.

If a cursor key 232 or 234 closure is detected at 374, the screen cursor will be positioned up or down at 378 corresponding to the up or down cursor. The screen buffer is updated at 353 to reflect the new cursor position.

Referring to the flow diagram of FIG. 7, if closure of the PG key 224 is detected at 321, followed by closure of the A key 242 at 324, the theme mode is selected. Referring to FIG. 9, the theme buffer 400 is selected by the CPU 110 or 178 to output to the video generator 136 or 204 and displayed on the TV 126 or 200, as indicated at 401. The theme buffer data originates from the received program list data. The themes may change over time as new themes are presented. The status line information is also displayed on the TV 126 or 200, as indicated at 402. The status line indicates the current PG mode, theme, time, date and also shows the number of selected themes.

If a cursor key 232–234 closure is detected at 403, the cursor position is moved up or down one listing at 409 and the display is updated at 401. If an SEL key 228 closure is detected at 404, the listing pointed by the cursor is annotated at 410 and displayed as an asterisk next to the listing.

If a C key 230 closure is detected at 405, any annotated theme pointed to by the cursor is deleted at 411. If the theme is not annotated, the C key 230 is ignored.

Each time a theme is selected or deleted, the number of themes selected is determined and the status line updated at 402 to reflect the current status.

If entry of the digits 1, 2, 3 or 4 keys 246 is detected at 406, a new theme buffer is selected at 412 and displayed at 401.

If an MG key 222 closure is detected at 407, the screen is cleared and replaced by the MG mode, FIG. 7. If a TV key 226 closure is detected at 408, the display is replaced by the TV program selected by the programmable tuner 132 or 164 prior to the theme mode.

If a key is detected other than any of the above, an error message is placed in the status line field at 413 indicating the keys allowed.

Prime

Referring to FIG. 7, if a P key closure is detected at 325, the prime time mode is selected. Referring to the prime time flow chart, FIG. 10, the prime time buffer is selected and displayed at 420. The status information for the prime mode is also displayed at 421.

The prime time entry mode is set up to input the start time at 422. If a digit key 246 is detected at 423, followed by either the A or P key 242 or 240, indicating AM or PM respectively, the digit and am or pm is stored at 428 in the prime screen buffer. If neither A or

P is detected, the SEL decision block 424 determines whether the SEL key 228 has been entered. If the SEL key 228 is detected, the prime screen buffer will accept the digit and store it at 428 with an implied am or pm based on the previous am or pm selection.

When an input is accepted, the entry mode changes from the start time to the end time at 429. The end entry sequence is the same as the start, except when the screen is updated, the prime mode exits to the MG display. The new prime time is now displayed on the MG status line.

If none of SEL, A or P 228, 242, 240 are detected at 424, and the key closure is not MG 222 or TV 226, as detected at 426 and 427, then a prime mode error message is displayed at 430. The message is inserted into the status line indicating the valid keys that can be entered.

If the MG or TV key 222 or 226 is detected, the result is the same as for the theme mode.

Channel

Referring to the command string flow diagram, FIG. 7, the channel mode is selected if the C key 230 is detected at 326. Referring to the channel flow diagram, FIG. 11, the channel screen buffer 450 is selected by the CPU 110 or 178 to be displayed at 451 on the TV 126 or 200.

Status information for the channel mode is displayed at 452 with the channel information. If the cursor keys 232–234 are detected at 453, the entry list switches from channels to be displayed to channels not to be displayed at 459.

If a digit key 246 is detected at 454, the CPU 110 or 178 waits for an SEL key 228 entry at 460 to enter the data into the channel screen buffer at 461.

If a page key 236–238 is detected at 455, an underline marker will be positioned under the first channel number entry at 462. If the following key is a C (cancel) key 230, detected at 463, the underlined channel will be deleted from the channel screen buffer at 464. If it is not a C key 230, the CPU 110 or 178 will wait for another key at 455. If another page key 236–238 is entered, the underline will move to the next channel number listed at 462. Thus the page keys 236–238 may be used to point at a channel to be deleted.

If an invalid key is entered (none of the above keys, MG 222 or TV 226, tested at 456 and 457 respectively), an error message for the channel mode will be displayed on the status line at 458 indicating the required valid keys.

Referring again to the command string flow diagram, FIG. 7, if the + key 244 is detected at 327, the schedule mode is selected. Referring to the schedule flow diagram, FIG. 12, the CPU 110 or 178 selects the schedule screen buffer to be displayed on TV 126 or 200 when the schedule mode is enabled. The schedule is presented on the upper half of the screen at 480.

The program listing is presented on the lower half of the screen at 481. The remaining time for each listed program is computed by referencing against the current time and the length of program time. If the P key 240 is detected at 482, the cursor moves from the listing section to the schedule section of the screen. The P key 240 is used to toggle the cursor between the two sections at 488.

If a cursor key 232–234 is detected at 483, the cursor will be positioned at 489 a line at a time as in the MG display. However, instead of causing the screen to scroll when the cursor reaches the bottom of the screen, scrolling starts when the cursor attempts to cross the middle of the screen, that is, cross into the other section of the display.

If a page key 236–238 is detected at 483, the section with the cursor will scroll at 489 forward or backward depending on the page direction.

If the SEL key 228 is detected at 484, and if the cursor is located in the program list section at 490, the listing pointed to by the cursor will be computed for non-conflict with existing listing. If the desired new listing schedule overlaps or conflicts with the existing listing, a warning message will appear in the status line field. The user is required to enter the SEL key 228 a second time to update the schedule. If the warning message is ignored, the latter entry will not be supported for purposes of unattended VCR operation. Thus, the user is informed of a possible error before unattended recording is started.

When the SEL key 228 is entered, the selected list is copied to the end of the schedule section at 491. If the schedule section is full, the status line will indicate that a schedule listing must be deleted to make room for the new listing. When a list is changed, the display is updated at 480.

If the C key 230 is detected at 485, and if the cursor is located in the schedule list section, determined at 492, the listing pointed to by the cursor will be removed at 493 and the remaining listings will be shifted forward by one listing to fill the gap left by the deleted listing.

If the key is MG 222 or TV 226, as determined at 486 and 487 the result is the same as for the theme mode discussed above.

If an invalid key is entered, a schedule error message will appear in the status line at 494.

Finally in the command string flow diagram, FIG. 7, if a key closure other than the above keys described for steps 324–327 is detected, a PG error message will be generated at 328.

Alarm and Unattended Recording

Referring to the alarm flow chart, FIG. 13, a schedule search is made once a minute at 500. If the system clock time is within the schedule time at 501, the TV set 126 or 200 is tested to see if it is on or off at 502. If the TV 126 or 200 is on, a sub-title showing the name of the scheduled list that produced the alarm will be displayed at 508. If the TV key 226 is detected at 509, the sub-title will be deleted at 510. If the TV key 226 is not detected when the scheduled program is active, the alarm 156 or 217 will be sounded at 511.

If the TV 126 or 200 is not on at 502, the alarm 156 or 217 will be sounded five minutes before the start of the scheduled program at 503. If the TV is still not on at 504, the programmable tuner 132 of FIG. 3 or 164 of FIG. 4 will be set to the scheduled program at 505. The VCR 150 or 216 will be turned on by a signal on line 154 or line 218, respectively, to record the program at 506. At the end of the program at 507, a new search is commenced at 500.

For unattended recording with the TV scheduler 160 of FIG. 4B, turn on of the remote VCR 216 is accomplished by means of the remote controller 1010 connected to the TV scheduler 160. Turn-on, record and turn-off are all actuated remotely as described above in connection with FIG. 4B.

Broadcast Format

Each program listing is framed with the following information;

Start time	hour, minute
Duration of program	hour, minutes
Channel number	two digits
Theme classification number	two digits
Theme subclassification number	two digits
Linking number (only for serial shows)	three digits
Optional expanded listing	text up to 300 characters
End of Program	single character
Satellite symbol	two characters
Satellite name	five characters
Encrypted and any special broadcast indicators	one character

Program listings are contained within a variable length data block of about 1,000 bytes. Each block includes CRC codes to allow correction of short burst errors of up to six characters.

The systems shown in FIGS. 1-4 are preferably implemented with the commercially available subsystems shown in the following table.

Reference Nos.	Subsystem	Source
22	IBM PC/AT	IBM Corporation, Boka Raton, Florida
26, 102, 169	Hayes Smartmodem 1200	Hayes Microcomputer Products, Norcross Georgia
106, 180	Little Board/186 Microcomputer	Ampro Computers, Inc. Mountain View, California
116, 188	Remote Control Transmitter Model SDA 2208-2	Siemens Iselin, N.J.
118, 190	Remote Control Receiver Model SAB 4209	Siemens
126, 200	Sony KV-2670R with auxiliary input	Sony Corp. New York, N.Y.
132, 164	Programmable Tuner SA 210	Siemens
98	Quotrex FM/SCA Receiver	Data Spead, San Mateo, California
136, 204	Motorola CRT Controller MC6845	Motorola, Inc. Austin, Texas
1010, 1020	JVC Model RM-P67U Wireless Remote Control	JVC Co. of America Elmwood Park, N.J.

It should now be readily apparent to those skilled in the art that a novel electronic system and process for controlling a television receiver to allow user selection of broadcast programs from schedule information capable of achieving the stated objects of the invention has been provided. The system and process of this invention allows the user to supply selection criteria to the system and in the process that can be combined to search a substantial quantity of schedule information received as a broadcast or otherwise supplied to the system to choose programs meeting the selection criteria. The system and process of this invention will determine if the viewer's television set is turned on at the time of a selected broadcast program, and will automatically record the selected program on a VCR or other program recording device if the television set is not turned on.

It should further be apparent to those skilled in the art that various changes in form and details of the invention as shown and described may be made. For example, the schedule information could be accessible with a personal computer through an information utility, such as Compuserve or The Source, and the user could either make the selection inputs to the utility's mainframe for running a selection program on the mainframe and then download the selected program information, or download the program schedule information for his or her locality, then run the selection program with the downloaded program schedule information on the personal computer. The television set and VCR could then be controlled as peripherals of the personal computer. Alternatively, the user could employ the selected program information from the personal computer to control the television receiver or VCR manually in the process of this invention. A diskette containing broadcast information could be used instead of a direct broadcast as an input to the TV scheduler. The diskette can be read by a computer that controls a programmable TV tuner. The TV scheduler can be used to control a satellite programmable tuner as well as a TV programmable tuner. If the user selects a listing of a program that is broadcast by satellite, the scheduler will automatically set the satellite tuner, as well as the TV tuner, to correspond to the selected listing. It is intended that such changes be included within the spirit and scope of the claims appended hereto.

What is claimed is:

1. A system for controlling a television receiver to allow user selection of broadcast programs from schedule information, which comprises a data processor, a first input means for the schedule information connected to said data processor, a second user selection input means connected to said data processor, said data processor being configured to select programs from the schedule information based on user inputs, storage means connected to receive the schedule information for programs selected by said data processor, and a programmable tuner for connection to the television receiver, said programmable tuner being connected to receive control signals from said data processor at a time of a selected broadcast for causing said programmable tuner to supply broadcast signals for the selected program to the television receiver, said data processor being configured to supply an actuating signal to a program recorder at the time of a broadcast program selected by said data processor and to supply the broadcast signal for the selected program to said program recorder, said system being configured to allow said television receiver to receive a different program than the broadcast signal for the selected program supplied to said program recorder.

2. The system of claim 1 additionally comprising a video display generator connected to receive signals from said data processor for generating a video display from the schedule information and the user selections on the television receiver, and a video switcher connected to receive video display signals from said video display generator, broadcast program signals from said programmable tuner and control signals from said data processor for selecting between the video display signals and the broadcast program signals for supplying to the television receiver.

3. The system of claim 2 in which said data processor and said video display generator are further configured to display names of program services in the schedule information.

4. The system of claim 2 in which said data processor and said video display generator are further configured

to present a preselected portion of the schedule information for the user selection.

5. The system of claim 1 in which the schedule information is also broadcast and said first input means comprises a broadcast signal receiver connected to supply the broadcast schedule information to said data processor.

6. The system of claim 5 in which said broadcast signal receiver is a frequency modulation receiver configured to receive the broadcast schedule information independently of the broadcast programs, said first input means includes a data demodulator connected to supply the schedule information to said data processor, said frequency modulation receiver being connected to supply the broadcast schedule information to said data demodulator.

7. The system of claim 5 in which the schedule information is broadcast in an otherwise unused portion of a television program broadcast, said programmable tuner includes said broadcast signal receiver, said first input means includes a data demodulator connected to supply the schedule information to said data processor, and said programmable tuner is connected to supply the schedule information portion of the television program broadcast to said data demodulator.

8. The system of claim 1 in which said data processor is further configured to supply an actuating signal to a program recorder at the time of a broadcast program selected by said data processor and to supply the broadcast signal for the selected program to said program recorder.

9. The system of claim 1 additionally comprising a video display generator connected to receive signals from said data processor for generating a video display from the schedule information and the user selections on the television receiver, and a video switcher connected to receive video display signals from said video display generator, broadcast program signals from said programmable tuner and control signals from said data processor for selecting between the video display signals and the broadcast program signals for supplying to the television receiver, and in which the schedule information is also broadcast and said first input means comprises a broadcast signal receiver connected to supply the broadcast schedule information to said data processor.

10. The system of claim 9 in which said data processor is further configured to provide signals to said video display generator for presenting a plurality of user selection menus on the television receiver, and said second user selection input means includes a plurality of keys for making selections from the menus for choosing programs from the schedule information.

11. The system of claim 1 in which said programmable tuner receives both the schedule information and the broadcast signals for the selected programs, said programmable tuner being connected as part of said first input means.

12. A system for controlling a television receiver to allow user selection of broadcast programs from schedule information, which comprises a data processor, a first input means for the schedule information connected to said data processor, a second user selection input means connected to said data processor, said data processor being configured to select programs from the schedule information based on user inputs, storage means connected to receive the schedule information for programs selected by said data processor, and a programmable tuner for connection to the television receiver, said programmable tuner being connected to receive control signals from said data processor at a time of a selected broadcast for causing said programmable tuner to supply broadcast signals for the selected programs to the television receiver, said data processor being configured to provide signals to said video display generator for presenting a plurality of user selection menus on the television receiver, and said second user selection input means includes a plurality of keys for making selections from the menus for choosing programs from the schedule information, said data processor being configured to allow combinations of the menu selections for choosing programs from the schedule information.

13. A system for controlling a television receiver to allow user selection of broadcast programs from schedule information, which comprises a data processor, a first input means for the schedule information connected to said data processor, a second user selection input means connected to said data processor, said data processor being configured to select programs from the schedule information based on user inputs, storage means connected to receive the schedule information for programs selected by said data processor, and a programmable tuner for connection to the television receiver, said programmable tuner being connected to receive control signals from said data processor at a time of a selected broadcast for causing said programmable tuner to supply broadcast signals for the selected programs to the television receiver, said data processor being configured to supply an actuating signal to a program recorder at the time of a broadcast program selected by said data processor and to supply the broadcast signal for the selected program to said program recorder, said data processor being configured to receive an input signal for determining whether the television receiver is operating at the time of the broadcast program selected by said data processor and to supply the actuating signal to said program recorder unless the television receiver is operating.

14. A system for controlling a television receiver to allow user selection of broadcast programs from schedule information, which comprises a data processor, a first input means for the schedule information connected to said data processor, a second user selection input means connected to said data processor, said data processor being configured to select programs from the schedule information based on user inputs, storage means connected to receive the schedule information for programs selected by said data processor, and a programmable tuner for connection to the television receiver, said programmable tuner being connected to receive control signals from said data processor at a time of a selected broadcast for causing said programmable tuner to supply broadcast signals for the selected programs to the television receiver, said data processor being configured to supply an actuating signal to a program recorder at the time of a broadcast program selected by said data processor, said data processor being connected to a remote controller for said program recorder to supply control signals to said remote controller for recording of the selected program.

15. A system for controlling a television receiver to allow user selection of broadcast programs from schedule information, which comprises a data processor, a first input means for the schedule information connected to said data processor, a second user selection

input means connected to said data processor, said data processor being configured to select programs from the schedule information based on user inputs, storage means connected to receive the schedule information for programs selected by said data processor, and a programmable tuner for connection to the television receiver, said programmable tuner being connected to receive control signals from said data processor at a time of a selected broadcast for causing said programmable tuner to supply broadcast signals for the selected programs to the television receiver, said data processor being configured to supply an actuating signal to a program recorder at the time of a broadcast program selected by said data processor and to supply the broadcast signal for the selected program to said program recorder, the broadcast signals including end of program information for at least programs of uncertain duration, and said data processor being configured to terminate recording by the program recorder in response to the end of program information.

16. A system for controlling a television receiver to allow user selection of broadcast programs from schedule information, which comprises a data processor, a first input means for the schedule information connected to said data processor, a second user selection input means connected to said data processor, said data processor being configured to select programs from the schedule information based on user inputs, storage means connected to receive the schedule information for programs selected by said data processor, and a programmable tuner for connection to the television receiver, said programmable tuner being connected to receive control signals from said data processor at a time of a selected broadcast for causing said programmable tuner to supply broadcast signals for the selected programs to the television receiver, the schedule information including linking information to identify multiple programs of a single series and said data processor being configured to select the multiple programs of the single series on the basis of the linking information in response to user selection of one of the programs in the single series.

17. A system for controlling a television receiver to allow user selection of broadcast programs from schedule information, which comprises a data processor, a first input means for the schedule information connected to said data processor, a second user selection input means connected to said data processor, said data processor being configured to select programs from the schedule information based on user inputs, storage means connected to receive the schedule information for programs selected by said data processor, and a programmable tuner for connection to the television receiver, said programmable tuner being connected to receive control signals from said data processor at a time of a selected broadcast for causing said programmable tuner to supply broadcast signals for the selected programs to the television receiver, said data processor being configured to receive an input signal for determining whether the television receiver is operating prior to the time of a broadcast program selected by said data processor, said system further comprising an alarm connected to receive an actuating signal from said data processor, and said data processor being configured to provide the actuating signal to said alarm unless the television receiver is operating when said data processor checks the television receiver for operation.

18. A process for controlling the presentation of broadcast programs to a television receiver, which comprises supplying program schedule information to a data processor, supplying user program selection criteria to the data processor, combining user selection criteria, selecting those programs meeting the combined user selection criteria for viewing from the program schedule information in the data processor, storing information identifying the selected programs, and using the stored information to tune the television receiver to the selected programs.

19. The process of claim 18 in which the television receiver is used as a display by the data processor for presenting messages to the user during the process.

20. The process of claim 19 in which names of program services are displayed in the schedule information.

21. The process of claim 19 in which only a preselected portion of the schedule information is presented for the user selection.

22. The process of claim 18 in which at least some of the user selection criteria are supplied to the data processor by presenting a menu from the data processor on a display and allowing the user to select an item from the menu.

23. The process of claim 18 further comprising the steps of checking for a conflict between a selected program and a previously selected program and providing an indication to the user of such conflict.

24. The process of claim 18 in which the program schedule information is supplied to the data processor by broadcast.

25. The process of claim 24 in which the program schedule information is supplied as a separate broadcast from the program broadcasts.

26. The process of claim 24 in which the television receiver is used as a display by the data processor for presenting messages to the user during the process.

27. The process of claim 26 in which at least some of the user selection criteria are supplied to the data processor by presenting a menu from the data processor on a display and allowing the user to select an item from the menu.

28. The process of claim 27 further comprising the steps of checking for a conflict between a selected program and a previously selected program and providing an indication to the user of such conflict.

29. The process of claim 28 further including the steps of providing linking information to identify multiple programs of a single series and selecting the multiple programs of the single series on the basis of the linking information in response to user selection of one of the programs in the single series.

30. The process of claim 29 additionally comprising the steps of using the data processor to turn on a broadcast program recording device for a selected broadcast program and recording the selected broadcast program on the program recording device.

31. The process of claim 24 in which the program schedule information and the programs are broadcast together, the process additionally comprising the step of separating the program schedule information from the programs for supplying the program schedule information to the data processor.

32. A process for controlling the presentation of broadcast programs to a television receiver, which comprises supplying program schedule information to a data processor, supplying user program selection criteria to the data processor, using the user selection criteria

to select programs for viewing from the program schedule information in the data processor, storing information identifying the selected programs, using the stored information to tune the television receiver to the selected programs, using the television receiver as a display by the data processor for presenting messages to the user during the process, including time remaining for a program being broadcast.

33. A process for controlling the presentation of broadcast programs to a television receiver, which comprises supplying program schedule information to a data processor, supplying user program selection criteria to the data processor, using the user selection criteria to select programs for viewing from the program schedule information in the data processor, storing information identifying the selected programs, using the stored information to tune the television receiver to the selected programs, turning on a broadcast program recording device for a selected broadcast program, recording the selected broadcast program, and supplying a different program broadcast signal to the television receiver than the broadcast signal for the selected program supplied to the program recording device.

34. A process for controlling the presentation of broadcast programs to a television receiver, which comprises supplying program schedule information to a data processor, supplying user program selection criteria to the data processor, using the user selection criteria to select programs for viewing from the program schedule information in the data processor, storing information identifying the selected programs, using the stored information to tune the television receiver to the selected programs, turning on a broadcast program recording device for a selected broadcast program, recording the selected broadcast program, broadcasting end of program information for at least programs of uncertain duration, and terminating recording by the program recording device in response to the end of program information.

35. A process for controlling the presentation of broadcast programs to a television receiver, which comprises supplying program schedule information to a data processor, supplying user program selection criteria to the data processor, using the user selection criteria to select programs for viewing from the program schedule information in the data processor, storing information identifying the selected programs, using the stored information to tune the television receiver to the selected programs, turning on a broadcast program recording device for a selected broadcast program, recording the selected broadcast program, determining whether the television receiver is operating at the time of the selected broadcast program and turning on the recording device and recording the selected broadcast program unless the television receiver is operating.

36. A process for controlling the presentation of broadcast programs to a television receiver, which comprises supplying program schedule information to a data processor, supplying user program selection criteria to the data processor, using the user selection criteria to select programs for viewing from the program schedule information in the data processor, storing information identifying the selected programs, using the stored information to tune the television receiver to the selected programs, turning on the program recording device, and recording the selected program by supplying control signals to a remote controller for the program recording device.

37. A process for controlling the presentation of broadcast programs to a television receiver, which comprises supplying program schedule information to a data processor, supplying user program selection criteria to the data processor, using the user selection criteria to select programs for viewing from the program schedule information in the data processor, storing information identifying the selected programs, using the stored information to tune the television receiver to the selected programs, providing linking information to identify multiple programs of a single series and selecting the multiple programs of the single series on the basis of the linking information in response to user selection of one of the programs in the single series.

38. A process for controlling the presentation of broadcast programs to a television receiver, which comprises supplying program schedule information to a data processor, supplying user program selection criteria to the data processor, using the user selection criteria to select programs for viewing from the program schedule information in the data processor, storing information identifying the selected programs, using the stored information to tune the television receiver to the selected programs, determining whether the television receiver is operating prior to the time of a broadcast program selected by the process and providing an alarm signal to the user unless the television receiver is operating when the television receiver is checked for operation.

39. A system for controlling a television receiver to allow user selection of broadcast programs from schedule information, which comprises a data processor, a first input means for the schedule information connected to said data processor, a second user selection input means connected to said data processor, said data processor being configured to select programs from the schedule information based on user inputs, storage means connected to receive the schedule information for programs selected by said data processor, and a programmable tuner for connection to the television receiver, said programmable tuner being connected to receive control signals from said data processor at a time of a selected broadcast for causing said programmable tuner to supply broadcast signals for the selected programs to the television receiver, a video display generator connected to receive signals from said data processor for generating a video display from the schedule information and the user selections on the television receiver, and a video switcher connected to receive video display signals from said video display generator, broadcast program signals from said programmable tuner and control signals from said data processor for selecting between the video display signals and the broadcast program signals for supplying to the television receiver, the schedule information also being broadcast, said first input means comprising a broadcast signal receiver connected to supply the broadcast schedule information to said data processor, said data processor being configured to provide signals to said video display generator for presenting a plurality of user selection menus on the television receiver, said second user selection input means including a plurality of keys for making selections from the menus for choosing programs from the schedule information, said data processor being configured to allow combinations of the menu selections for choosing programs from the schedule information.

40. The system of claim 39 in which the schedule information includes linking information to identify multiple programs of a single series and said data processor is further configured to select the multiple programs of the single series on the basis of the linking information in response to user selection of one of the programs in the single series.

41. The system of claim 40 in which said data processor is further configured to supply an actuating signal to a program recorder at the time of a broadcast program selected by said data processor.

42. A system for controlling a recording device to allow user selection of broadcast programs from schedule information, which comprises a data processor, a first input means for the schedule information connected to said data processor, a second user selection input means connected to said data processor, said data processor being configured to select programs from the schedule information based on user inputs, storage means connected to receive the schedule information for programs selected by said data processor, a programmable tuner for connection to the recording device, said programmable tuner being connected to receive control signals from said data processor at a time of a selected broadcast for causing said programmable tuner to supply broadcast signals for the selected programs to the recording device, and a television receiver, said system being configured to allow said television receiver to receive a different program than the broadcast signal for the selected program supplied to said recording device.

43. The system of claim 42 additionally comprising a display means connected to receive signals from said data processor for generating a display from the schedule information and the user selections on said display means.

44. The system of claim 43 in which said data processor and said display means are further configured to present a preselected portion of the schedule information for the user selection.

45. The system of claim 43 in which the schedule information is broadcast and said first input means comprises a broadcast signal receiver connected to supply the broadcast schedule information to said data processor.

46. The system of claim 45 in which said broadcast signal receiver is a frequency modulation receiver configured to receive the broadcast schedule information independently of the broadcast programs, said first input means includes a data demodulator connected to supply the schedule information to said data processor, said frequency modulation receiver being connected to supply the broadcast schedule information to said data demodulator.

47. The system of claim 45 additionally comprising a television receiver, and in which the schedule information is broadcast in an otherwise unused portion of a television program broadcast, said programmable tuner includes said broadcast signal receiver, said first input means includes a data demodulator connected to supply the schedule information to said data processor, and said programmable tuner is connected to supply the schedule information portion of the television program broadcast to said data demodulator.

48. The system of claim 43 in which said data processor is further configured to provide signals to said display means for presenting a plurality of user selection menus on said display means and said second user selection input means includes a plurality of keys for making selections from the menus for choosing programs from the schedule information.

49. The system of claim 48 in which said data processor is further configured to allow combinations of the menu selections for choosing programs from the schedule information.

50. The system of claim 42 in which said programmable tuner receives both the schedule information and the broadcast signals for the selected programs, said programmable tuner being connected as part of said first input means.

51. A system for controlling a recording device to allow user selection of broadcast programs from schedule information, which comprises a data processor, a first input means for the schedule information connected to said data processor, a second user selection input means connected to said data processor, said data processor being configured to select programs from the schedule information based on user inputs, storage means connected to receive the schedule information for programs selected by said data processor, a programmable tuner for connection to the recording device, said programmable tuner being connected to receive control signals from said data processor at a time of a selected broadcast for causing said programmable tuner to supply broadcast signals for the selected programs to the recording device, said data processor being connected to a remote controller for said recording device to supply control signals to said remote controller for powering on said recording device, starting and stopping recording of the selected program and powering off said recording device.

52. A system for controlling a recording device to allow user selection of broadcast programs from schedule information, which comprises a data processor, a first input means for the schedule information connected to said data processor, a second user selection input means connected to said data processor, said data processor being configured to select programs from the schedule information based on user inputs, storage means connected to receive the schedule information for programs selected by said data processor, a programmable tuner for connection to the recording device, said programmable tuner being connected to receive control signals from said data processor at a time of a selected broadcast for causing said programmable tuner to supply broadcast signals for the selected programs to the recording device, the broadcast signals including end of program information for at least programs of uncertain duration, and said data processor being configured to terminate recording by the recording device in response to the end of program information.

53. A system for controlling a recording device to allow user selection of broadcast programs from schedule information, which comprises a data processor, a first input means for the schedule information connected to said data processor, a second user selection input means connected to said data processor, said data processor being configured to select programs from the schedule information based on user inputs, storage means connected to receive the schedule information for programs selected by said data processor, a programmable tuner for connection to the recording device, said programmable tuner being connected to receive control signals from said data processor at a time of a selected broadcast for causing said programmable

tuner to supply broadcast signals for the selected programs to the recording device, the schedule information including linking information to identify multiple programs of a single series and said data processor being configured to select the multiple programs of the single series on the basis of the linking information in response to user selection of one of the programs in the single series.

54. A system for controlling receipt of broadcast television programs to allow user selection of broadcast programs from broadcast schedule information, which comprises a data processor, a programmable tuner configured to receive both the broadcast programs and the broadcast schedule information connected to said data processor, means connected between said programmable tuner and said data processor for separating the broadcast schedule information from the broadcast programs and supplying the broadcast schedule information to said data processor, a user selection input means connected to said data processor, said data processor being configured to select programs from the schedule information based on user inputs, storage means connected to receive the schedule information for programs selected by said data processor, said programmable tuner being connected to receive control signals from said data processor at a time of a selected broadcast for causing said programmable tuner to supply signals for the selected broadcast programs to at least one signal receiver for the selected broadcast programs.

55. The system for controlling receipt of broadcast television programs of claim 54 in which said at least one signal receiver comprises a recording device.

56. The system for controlling receipt of broadcast television signals of claim 55 in which said at least one signal receiver additionally comprises a television, and said system additionally comprises a means for switching between said recording device and said television for receiving the signals for the selected broadcast programs.

* * * * *