EXHIBIT A,

PART 1



U.S.S.N. 09/874931

UNITED STATES PATENT AND TRADEMARK OFFICE

COMMISSIONER FOR PATENTS
UNITED STATES PATENT AND TRADEMARK OFFICE
WASHINGTON, D.C. 20231
www.uspto.gov

Data Sheet

CONFIRMATION NO. 3517

SERIAL NUMBER	FILING DATE	CLASS	GROUP ART UNIT	ATTORNEY DOCKET NO.
09/874,931	06/05/2001 RULE	416	3745	3600.100-Cont.

APPLICANTS

David A. Spear, Manchester, CT, Deceased;
Dennis N. Kantor, East Hartford, CT, Legal Representative;
Bruce P. Biederman, West Hartford, CT;
John A. Orosa, Palm Beach Gardens, FL;

CONTINUING DATA **********

THIS APPLICATION IS A CON OF 09/343,736 06/30/1999 ABN. ~~ABN.~~ Verified checked w
WHICH IS A REI OF 08/559,965 11/17/1995 PAT 5,642,985 checked w

FOREIGN APPLICATIONS **********

REQUIRED, FOREIGN FILING LICENSE GRANTED
07/16/2001

		STATE OR COUNTRY	SHEETS DRAWING	TOTAL CLAIMS	INDEPENDENT CLAIMS
Sign Priority claimed	☐ yes ☒ no				
USC 119 (a-d) conditions	☐ yes ☒ no ☐ Met after Allowance				
Verified and Acknowledged	Examiner's Signature Initials	CT	7	22	9

ADDRESS

David M. Quinlan PC
Nassau Street
Princeton ,NJ 08542

TITLE

Swept turbomachinery blade

FILING FEE RECEIVED	FEES: Authority has been given in Paper	
1578	No _____ to charge/credit DEPOSIT ACCOUNT No _____ for following:	☐ All Fees ☐ 1.16 Fees (Filing) ☐ 1.17 Fees (Processing Ext. of time) ☐ 1.18 Fees (Issue) ☐ Other _____ ☐ Credit

06-06-01

A/RG

Express Mail Mailing Label No. EI593095157US

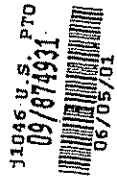

Attorney Docket No. 3600.100 Cont.

IN THE UNITED STATES PATENT AND TRADEMARK OFFICE

In re Reissue Application of	)	Examiner: C. Verdier
DAVID A. SPEAR ET AL.	)	Group Art Unit: 3745
Appln. No.: Not yet assigned	)	
Filed: Herewith	)	
For: SWEPT TURBOMACHINERY BLADE	)	Date: June 5, 2001

Commissioner for Patents
Washington, D.C. 20231

LETTER ACCOMPANYING REISSUE APPLICATION

Sir:

Pursuant to the practice under 37 C.F.R. §§ 1.53 and 1.171 et seq., enclosed herewith for filing are the following papers constituting an application for reissue of United States Letters Patent No. 5,642,985, issued July 1, 1997, to David A. Spear, Bruce P. Biederman and John A. Orosa for SWEPT TURBOMACHINERY BLADE:

1. Mounted soft copy of the specification and new claims.

2. A copy of the patent drawings.

3. A soft copy of the original patent.

4. Preliminary Amendment and Notice Under 37 C.F.R. § 1.607(c).

All correspondence should be directed to the following address:

David M. Quinlan, P.C.
40 Nassau Street
Princeton, NJ 08542
Tel: 609-921-8660
Fax: 609-921-8651

Respectfully submitted,

Attorney for Applicants

Registration No. 26,641

DAVID M. QUINLAN, P.C.
40 Nassau Street
Princeton, NJ 08542
Facsimile: (609) 921-8651

ss Mail Mailing Label No. EI593095157US

SWEPT TURBOMACHINERY BLADE

TECHNICAL FIELD

This invention relates to turbomachinery blades, and particularly to blades whose airfoils are swept to minimize the adverse effects of supersonic flow of a working medium over the airfoil surfaces.

BACKGROUND OF THE INVENTION

Gas turbine engines employ cascades of blades to exchange energy with a compressible working medium gas that flows axially through the engine. Each blade in the cascade has an attachment which engages a slot in a rotatable hub so that the blades extend radially outward from the hub. Each blade has a radially extending airfoil, and each airfoil cooperates with the airfoils of the neighboring blades to define a series of interblade flow passages through the cascade. The radially outer boundary of the flow passages is formed by a case which circumscribes the airfoil tips. The radially inner boundary of the passages is formed by abutting platforms which extend circumferentially from each blade.

During engine operation the hub, and therefore the blades attached thereto, rotate about a longitudinally extending rotational axis. The velocity of the working medium relative to the blades increases with increasing radius. Accordingly, it is not uncommon for the airfoil leading edges to be swept forward or swept back to mitigate the adverse aerodynamic effects associated with the compressibility of the working medium at high velocities.

One disadvantage of a swept blade results from pressure waves which extend along the span of each airfoil suction surface and reflect off the surrounding case. Because the airfoil is swept, both the incident waves and the reflected waves are oblique to the case. The reflected waves interact with the incident waves and coalesce into a planar aerodynamic shock which extends across the interblade flow channel between neighboring airfoils. These "endwall shocks" extend radially inward a limited distance from the case. In addition, the compressibility of the working medium causes a passage shock, which is unrelated to the above described endwall shock, to extend across the passage from the leading edge of each blade to the suction surface of the adjacent blade. As a result, the working medium gas flowing into the channels encounters multiple shocks and experiences unrecoverable losses in velocity and total pressure, both of which degrade the engine's efficiency. What is needed is a turbomachinery blade whose airfoil is swept to mitigate the effects of working medium compressibility while also avoiding the adverse influences of multiple shocks.

DISCLOSURE OF THE INVENTION

It is therefore an object of the invention to minimize the aerodynamic losses and efficiency degradation associated with endwall shocks by limiting the number of shocks in each interblade passage.

According to the invention, a blade for a blade cascade has an airfoil which is swept over at least a portion of its span, and the section of the airfoil radially coextensive with the endwall shock intercepts the endwall shock extending from the neighboring airfoil so that the endwall shock and the passage shock are coincident.

In one embodiment the axially forwardmost extremity of the airfoil's leading edge defines an inner transition point located at an inner transition radius radially inward of the airfoil tip. An outer transition point is located at an outer transition radius radially intermediate the inner transition radius and the airfoil tip. The outer transition radius and the tip bound a blade tip region while the inner and outer transition radii bound an intermediate region. The leading edge is swept at a first sweep angle in the intermediate region and is swept at a second sweep angle over at least a portion of the tip region. The first sweep angle is generally nondecreasing with increasing radius and the second sweep angle is generally non-increasing with increasing radius.

The invention has the advantage of limiting the number of shocks in each interblade passage so that engine efficiency is maximized.

BRIEF DESCRIPTION OF THE DRAWINGS

FIG. 1 is a cross sectional side elevation of the fan section of a gas turbine engine showing a swept back fan blade according to the present invention.

FIG. 2 is an enlarged view of the blade of FIG. 1 including an alternative leading edge profile shown by dotted lines and a prior art blade shown in phantom.

FIG. 3 is a developed view taken along the line 3—3 of FIG. 2 illustrating the tips of four blades of the present invention along with four prior art blades shown in phantom.

FIG. 4 is a schematic perspective view of an airfoil fragment illustrating the definition of sweep angle.

FIG. 5 is a developed view similar to FIG. 3 illustrating an alternative embodiment of the invention and showing prior art blades in phantom.

FIG. 6 is a cross sectional side elevation of the fan section of a gas turbine engine showing a forward swept fan blade according to the present invention and showing a prior art fan blade in phantom.

FIG. 7 is a developed view taken along the line 7—7 of FIG. 6 illustrating the tips of four blades of the present invention along with four prior art blades shown in phantom.

BEST MODE FOR CARRYING OUT THE INVENTION

Referring to FIGS. 1–3, the forward end of a gas turbine engine includes a fan section 10 having a cascade of fan blades 12. Each blade has an attachment 14 for attaching the blade to a disk or hub 16 which is rotatable about a longitudinally extending rotational axis 18. Each blade also has a circumferentially extending platform 20 radially outward of the attachment. When installed in an engine, the platforms of neighboring blades in the cascade abut each other to form the cascade's inner flowpath boundary. An airfoil 22 extending radially outward from each platform has a root 24, a tip 26, a leading edge 28, a trailing edge 30, a pressure surface 32 and a suction surface 34. The axially forwardmost extremity of the leading edge defines an inner transition point 40 at an inner transition radius r_i-inner, radially inward of the tip. The blade cascade is circumscribed by a case 42 which forms the cascade's outer flowpath boundary. The case includes a rubstrip 46 which partially abrades away in the event that a rotating blade contacts the case during engine operation. A working medium fluid such as air 48 is pressurized as it flows axially through interblade passages 50 between neighboring airfoils.

The hub 16 is attached to a shaft 52. During engine operation, a turbine (not shown) rotates the shaft, and therefore the hub and the blades, about the axis 18 in direction R. Each blade, therefore, has a leading neighbor

which precedes it and a trailing neighbor which follows it during rotation of the blades about the rotational axis.

The axial velocity V_a (FIG. 3) of the working medium is substantially constant across the radius of the flowpath. However the linear velocity U of a rotating airfoil increases with increasing radius. Accordingly, the relative velocity V_r of the working medium at the airfoil leading edge increases with increasing radius, and at high enough rotational speeds, the airfoil experiences supersonic working medium flow velocities in the vicinity of its tip. Supersonic flow over an airfoil, while beneficial for maximizing the pressurization of the working medium, has the undesirable effect of reducing fan efficiency by introducing losses in the working medium's velocity and total pressure. Therefore, it is typical to sweep the airfoil's leading edge over at least a portion of the blade span so that the working medium velocity component in the chordwise direction (perpendicular to the leading edge) is subsonic. Since the relative velocity V_r increases with increasing radius, the sweep angle typically increases with increasing radius as well. As shown in FIG. 4, the sweep angle σ at any arbitrary radius is the acute angle between a line 54 tangent to the leading edge 28 of the airfoil 22 and a plane 56 perpendicular to the relative velocity vector V_r. The sweep angle is measured in plane 58 which contains both the relative velocity vector and the tangent line and is perpendicular to plane 56. In conformance with this definition sweep angles σ_1 and σ_2, referred to hereinafter and illustrated in FIGS. 2, 3 and 6 are shown as projections of the actual sweep angle onto the plane of the illustrations.

Sweeping the blade leading edge, while useful for minimizing the adverse effects of supersonic working medium velocity, has the undesirable side effect of creating an endwall reflection shock. The flow of the working medium over the blade suction surface generates pressure waves 60 (shown only in FIG. 1) which extend along the span of the blade and reflect off the case. The reflected waves 62 and the incident waves 60 coalesce in the vicinity of the case to form an endwall shock 64 across each interblade passage. The endwall shock extends radially inward a limited distance, d, from the case. As best seen in the prior art (phantom) illustration of FIG. 3, each endwall shock is also oblique to a plane 67 perpendicular to the rotational axis so that the shock extends axially and circumferentially. In principle, an endwall shock can extend across multiple interblade passages and affect the working medium entering those passages. In practice, expansion waves (as illustrated by the representative waves 68) propagate axially forward from each airfoil and weaken the endwall shock from the airfoil's leading neighbor so that each endwall shock usually affects only the passage where the endwall shock originated. In addition, the supersonic character of the flow causes passage shocks 66 to extend across the passages. The passage shocks, which are unrelated to endwall reflections, extend from the leading edge of each blade to the suction surface of the blade's leading neighbor. Thus, the working medium is subjected to the aerodynamic losses of multiple shocks with a corresponding degradation of engine efficiency.

The endwall shock can be eliminated by making the case wall perpendicular to the incident expansion waves so that the incident waves coincide with their reflections. However other design considerations, such as constraints on the flowpath area and limitations on the case construction, may make this option unattractive or unavailable. In circumstances where the endwall shock cannot be eliminated, it is desirable for the endwall shock to coincide with the passage shock since the aerodynamic penalty of coincident shocks is less than that of multiple individual shocks.

According to the present invention, coincidence of the endwall shock and the passage shock is achieved by uniquely shaping the airfoil so that the airfoil intercepts the endwall shock extending from the airfoil's leading neighbor and results in coincidence between the endwall shock and the passage shock.

A swept back airfoil according to the present invention has a leading edge 28, a trailing edge 30, a root 24 and a tip 26 located at a tip radius r_{tip}. An inner transition point 40 located at an inner transition radius r_i-inner is the axially forwardmost point on the leading edge. The leading edge of the airfoil is swept back by a radially varying first sweep angle σ_1 in an intermediate region 70 of the airfoil (in FIG. 2 plane 56 appears as the line defined by the plane's intersection with the plane of the illustration and in FIG. 3 the tangent line 54 appears as the point where the tangent line penetrates the plane of the Figure). The intermediate region 70 is the region radially bounded by the inner transition radius r_i-inner and the outer transition radius r_i-outer. The first sweep angle, as is customary in the art, is nondecreasing with increasing radius, i.e. the sweep angle increases, or at least does not decrease, with increasing radius.

The leading edge 28 of the airfoil is also swept back by a radially varying second sweep angle σ_2 in a tip region 74 of the airfoil. The tip region is radially bounded by the outer transition radius r_i-outer and a tip radius r_{tip}. The second sweep angle is nonincreasing (decreases, or at least does not increase) with increasing radius. This is in sharp contrast to the prior art airfoil 22' whose sweep angle increases with increasing radius radially outward of the inner transition radius.

The beneficial effect of the invention is appreciated primarily by reference to FIG. 3 which compares the invention (and the associated endwall and passage shocks) to a prior art blade (and its associated shocks) shown in phantom. Referring first to the prior art illustration in phantom, the endwall shock 64 originates as a result of the pressure waves 60 (FIG. 1) extending along the suction surface of each blade. Each endwall shock is oblique to a plane 67 perpendicular to the rotational axis, and extends across the interblade passage of origin. The passage shock 66 also extends across the flow passage from the leading edge of a blade to the suction surface of the blade's leading neighbor. The working medium entering the passages is therefore adversely influenced by multiple shocks. By contrast, the nonincreasing character of the second sweep angle of a swept back airfoil 22 according to the invention causes a portion of the airfoil leading edge to be far enough forward (upstream) in the working medium flow that the section of the airfoil radially coextensive with the endwall shock extending from the airfoil's leading neighbor intercepts the endwall shock 64 (the unique sweep of the airfoil does not appreciably affect the location or orientation of the endwall shock; the phantom endwall shock associated with the prior art blade is illustrated slightly upstream of the endwall shock for the airfoil of the invention for illustrative clarity). In addition, the passage shock 66 (which remains attached to the airfoil leading edge and therefore is translated forward along with the leading edge) is brought into coincidence with the endwall shock so that the working medium does not encounter multiple shocks.

The embodiment of FIGS. 2 and 3 illustrates a blade whose leading edge, in comparison to the leading edge of a conventional blade, has been translated axially forward parallel to the rotational axis (the corresponding translation of the trailing edge is an illustrative convenience—the

location of the trailing edge is not embraced by the invention). However the invention contemplates any blade whose airfoil intercepts the endwall shock to bring the passage shock into coincidence with the endwall shock. For example, FIG. 5 illustrates an embodiment where a section of the tip region is displaced circumferentially (relative to the prior art blade) so that the blade intercepts the endwall shock 64 and brings it into coincidence with the passage shock 66. As with the embodiment of FIG. 3, the displaced section extends radially inward far enough to intercept the endwall shock over its entire radial extent and brings it into coincidence with the passage shock 66. This embodiment functions as effectively as the embodiment of FIG. 3 in terms of bringing the passage shock into coincidence with the endwall shock. However it suffers from the disadvantage that the airfoil tip is curled in the direction of rotation R. In the event that the blade tip contacts the rubstrip 46 during engine operation, the curled blade tip will gouge rather than abrade the rubstrip necessitating its replacement. Other alternative embodiments may also suffer from this or other disadvantages.

The invention's beneficial effects also apply to a blade having a forward swept airfoil. Referring to FIG. 6 and 7, a forward swept airfoil 122 according to the present invention has a leading edge 128, a trailing edge 130, a root 124 and a tip 126 located at a tip radius r_{tip}. An inner transition point 140 located at an inner transition radius r_i-inner is the axially aftmost point on the leading edge. The leading edge of the airfoil is swept forward by a radially varying first sweep angle σ_1 in an intermediate region 70 of the airfoil. The intermediate region is radially bounded by the inner transition radius r_i-inner and the outer transition radius r_i-outer. The first sweep angle $|r_i|\ \sigma_i$ is nondecreasing with increasing radius, i.e. the sweep angle increases, or at least does not decrease, with increasing radius.

The leading edge 128 of the airfoil is also swept forward by a radially varying second sweep angle σ_2 in a tip region 74 of the airfoil. The tip region is radially bounded by the outer transition radius r_i-outer and the tip radius r_{tip}. The second sweep angle is nonincreasing (decreases, or at least does not increase) with increasing radius. This is in sharp contrast to the prior art airfoil 122' whose sweep angle increases with increasing radius radially outward of the inner transition radius.

In the forward swept embodiment of the invention, as in the swept back embodiment, the nonincreasing sweep angle σ_2 in the tip region 74 causes the endwall shock 64 to be coincident with the passage shock 66 for reducing the aerodynamic losses as discussed previously. This is in contrast to the prior art blade, shown in phantom where the endwall shock and the passage shock are distinct and therefore impose multiple aerodynamic losses on the working medium.

In the swept back embodiment of FIG. 2, the inner transition point is the axially forwardmost point on the leading edge. The leading edge is swept back at radii greater than the inner transition radius. The character of the leading edge sweep inward of the inner transition radius is not embraced by the invention. In the forward swept embodiment of FIG. 6, the inner transition point is the axially aftmost point on the leading edge. The leading edge is swept forward at radii greater than the inner transition radius. As with the swept back embodiment, the character of the leading edge sweep inward of the inner transition radius,is not embraced by the invention. In both the forward swept

and back swept embodiments, the inner transition point is illustrated as being radially outward of the airfoil root. However the invention also comprehends a blade whose inner transition point (axially forwardmost point for the swept back embodiment and axially aftmost point for the forward swept embodiment) is radially coincident with the leading edge of the root. This is shown, for example, by the dotted leading edge 28" of FIG. 2.

The invention has been presented in the context of a fan blade for a gas turbine engine, however, the invention's applicability extends to any turbomachinery airfoil wherein flow passages between neighboring airfoils are subjected to multiple shocks.

We claim:

[1. A turbomachinery blade for a turbine engine having a cascade of blades rotatable about a rotational axis so that each blade in the cascade has a leading neighbor and a trailing neighbor, and each blade cooperates with its neighbors to define flow passages for a working medium gas, the blade cascade being circumscribed by a case and under some operational conditions an endwall shock extends a limited distance radially inward from the case and also extends axially and circumferentially across the flow passages, and a passage shock also extends across the flow passages, the turbomachinery blade including an airfoil having a leading edge, a trailing edge, a root, a tip and an inner transition point located at an inner transition radius radially inward of the tip, the blade characterized in that at least a portion of the leading edge radially outward of the inner transition point is swept and a section of the airfoil radially coextensive with the endwall shock extending from the leading neighbor intercepts the endwall shock so that the endwall shock and the passage shock are coincident.

2. A turbomachinery blade for a turbine engine having a cascade of blades rotatable about a rotational axis so that each blade in the cascade has a leading neighbor and a trailing neighbor, and each blade cooperates with its neighbors to define flow passages for a working medium gas, the blade cascade being circumscribed by a case and under some operational conditions an endwall shock extends a limited distance radially inward from the case and also extends axially and circumferentially across the flow passages and a passage shock also extends across the flow passages, the turbomachinery blade including an airfoil having a leading edge, a trailing edge, a root, a tip located at a tip radius, an inner transition point located at an inner transition radius radially inward of the tip, and an outer transition point at an outer transition radius radially intermediate the inner transition radius and the tip radius, the blade having a tip region bounded by the outer transition radius and the tip radius, and an intermediate region bounded by the inner transition radius and the outer transition radius, the blade characterized in that the leading edge is swept in the intermediate region at a first sweep angle which is generally nondecreasing with increasing radius, and the leading edge is swept over at least a portion of the tip region at a second sweep angle which is generally nonincreasing with increasing radius so that the section of the airfoil radially coextensive with the endwall shock extending from the leading neighbor intercepts the endwall shock so that the endwall shock and the passage shock are coincident.

3. The turbomachinery blade of claim 1 or 2 characterized in that the inner transition radius is coincident with the root at the leading edge of the blade.]

13947[illegible]
09874931

J1046 U.S. PT
09/874931
06/05/01

INITIALS _____

CONTENTS

	Date Received (Incl. C. of M.) or Date Mailed			Date Received (Incl. C. of M.) or Date Mailed
Application papers.		42.		
[illegible] Fee Dec	7-16-01	43.		
Dec, Assignee, Fee	1/17/02	44.		
Corrected Receipt	1/17/02	45.		
Amdt A / IDS	7/23/02	46.		
Interview Summary	9-4-02	47.		
Terminal Disclaimer (ok)	9-19-02	48.		
Supplemental Declaration	10-11-02	49.		
Amdt B	6/5/01	50.		
[illegible] (3)	11-19-02	51.		
Interview Summary	5-14-03	52.		
Interview Summary	5-15-03	53.		
Amdt C	5/19/03	54.		
Declaration (by inventors)	5-19-03	55.		
Declaration (by Breugelmans)	5-19-03	56.		
Misc letter	5-19-03	57.		
IDS	5-19-03	58.		
Rejection	7/21/03	59.		
INTERVIEW SUMMARY	10/23/03	60.		
Ext Time	10/27/03	61.		
Response	10/27/03	62.		
Supp Declartion	10/29/03	63.		
		64.		
		65.		
		66.		
		67.		
		68.		
		69.		
		70.		
		71.		
		72.		
		73.		
		74.		
		75.		
		76.		
		77.		
		78.		
		79.		
		80.		
		81.		
		82.		

(LEFT OUTSIDE)

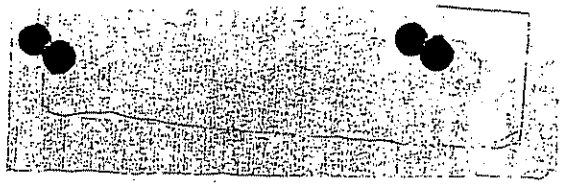

SEARCHED

Class	Sub.	Date	Exmr.
415 416	181 220 238 242 243 228	10/18/02	C.V.
updated	search	7/7/03	C.V.
415	~~220~~ 222 173.1 173.5	7/7/03	C.V.
updated	search	11/3/03	C.V.

INTERFERENCE SEARCHED

Class	Sub.	Date	Exmr.
All of the	above	11/3/03	C.V.

SEARCH NOTES
(INCLUDING SEARCH STRATEGY)

	Date	Exmr.
Search from Parented file 5,642,985	10/18/02	C.V.
1st [illegible]		

(RIGHT OUTSIDE)

SLIP STAPLE AREA (for additional references)

POSITION	INITIALS	ID NO.	DATE
FEE DETERMINATION			
O.I.P.E. CLASSIFIER			
FORMALITY REVIEW			
RESPONSE FORMALITY REVIEW	RR	70029	4/8/02

INDEX OF CLAIMS

✓	Rejected	N	Non-elected
=	Allowed	I	Interference
—	(Through numeral) Canceled	A	Appeal
÷	Restricted	O	Objected

Claim	Date																			
Original	10	1	11																	
	10	11	3																	
	02	03	03																	
1																				
2																				
3																				
4																				
5																				
6																				
7																				
8																				
9	✓																			
10	✓																			
11																				
12	✓																			
13	✓																			
14	✓																			
15	✓																			
16	✓																			
17	✓																			
18	✓	✓	=																	
19	✓	✓	=																	
20	✓																			
21																				
22	✓	✓	=																	
23	✓	✓	=																	
24																				
25																				
26																				
27																				
28																				
29																				
30																				
31																				
32																				
33																				
34																				
35																				
36																				
37																				
38																				
39																				
40																				
41																				
42																				
43																				
44																				
45																				
46																				
47																				
48																				
49																				
50																				

Claim	Date																			
Final / Original																				
51																				
52																				
53																				
54																				
55																				
56																				
57																				
58																				
59																				
60																				
61																				
62																				
63																				
64																				
65																				
66																				
67																				
68																				
69																				
70																				
71																				
72																				
73																				
74																				
75																				
76																				
77																				
78																				
79																				
80																				
81																				
82																				
83																				
84																				
85																				
86																				
87																				
88																				
89																				
90																				
91																				
92																				
93																				
94																				
95																				
96																				
97																				
98																				
99																				
100																				

Claim	Date																			
Final / Original																				
101																				
102																				
103																				
104																				
105																				
106																				
107																				
108																				
109																				
110																				
111																				
112																				
113																				
114																				
115																				
116																				
117																				
118																				
119																				
120																				
121																				
122																				
123																				
124																				
125																				
126																				
127																				
128																				
129																				
130																				
131																				
132																				
133																				
134																				
135																				
136																				
137																				
138																				
139																				
140																				
141																				
142																				
143																				
144																				
145																				
146																				
147																				
148																				
149																				
150																				

If more than 150 claims or 10 actions staple additional sheet here

4. A fan stage of a ducted gas turbine engine that is at least in part rotatable about an axis of rotation, comprising:

a fan casing that defines an inner duct wall having a fan rotor region, the inner duct wall of the fan casing at the fan rotor region being convergent;

a hub disposed concentrically relative to the fan casing;

a fan rotor that includes multiple swept fan blades, the swept fan blades being spaced apart around the hub, each of the multiple swept fan blades having:

a tip profile that substantially corresponds to the convergent inner duct wall of the fan casing;

a leading edge that defines a variable sweep angle in a direction perpendicular to the axis of rotation, the leading edge including:

an inner region adjacent the hub, the inner region defining a forward sweep angle;

an intermediate region between the inner region and the fan casing, the intermediate region defining a rearward sweep angle; and

an outer region between the intermediate region and the fan casing, the outer region being translated forward.

5. A fan stage of a ducted gas turbine engine that is at least in part rotatable about an axis of rotation, comprising:

a fan casing that defines an inner duct wall having a fan rotor region, the inner duct wall of the fan casing at the fan rotor region being convergent;

a hub disposed concentrically relative to the fan casing;

a fan rotor that includes multiple swept fan blades, the swept fan blades being spaced apart around the hub, each of the multiple swept fan blades having:

a tip profile that is convergent so as to substantially correspond to the convergent inner duct wall of the fan casing;

a leading edge that defines a variable sweep angle in a direction perpendicular to the axis of rotation, the leading edge including:

an inner region adjacent the hub, the inner region defining a forward sweep angle;

an intermediate region between the inner region and the fan casing, the intermediate region defining a rearward sweep angle; and

an outer region between the intermediate region and the fan casing, the outer region being translated forward.

6. A fan stage of a ducted gas turbine engine that is at least in part rotatable about an axis of rotation, comprising:

a fan casing that defines an inner duct wall having a fan rotor region, the inner duct wall of the fan casing at the fan rotor region being convergent;

a hub disposed concentrically relative to the fan casing;

a fan rotor that includes multiple swept fan blades, the swept fan blades being spaced apart around the hub, each of the multiple swept fan blades having:

a tip profile that substantially corresponds to the convergent inner duct wall of the fan casing;

a leading edge that defines a variable sweep angle in a direction perpendicular to the axis of rotation, the leading edge including:

an inner region adjacent the hub, the inner region defining a forward sweep angle;

an intermediate region between the inner region and the fan casing, the intermediate region defining a rearward sweep angle; and

an outer region between the intermediate region and the fan casing, the outer region defining a forward sweep angle.

7. A fan stage of a ducted fan gas turbine engine, comprising:

a fan casing having an inner duct wall which in a fan rotor region is convergent in the downstream direction; and

a fan rotor including a multiplicity of swept fan blades spaced apart around a hub mounted concentrically with respect to the fan duct, each of said swept fan blades having (i) a tip profile which in revolution substantially corresponds to the convergent duct wall, (ii) a leading edge of variable sweep angle which varies with increasing blade height or distance from the axis of rotation, said sweep angle having a forward sweep angle in a first height region between the root and a first intermediate radius, a rearward sweep angle in an intermediate height region between the first intermediate radius and a second intermediate radius, and a sweep angle in a third height region between the second intermediate radius and the tip of the blade such that said third height region is translated forward, and (iii) a stagger angle which increases progressively with blade height.

8. A fan stage of a ducted fan gas turbine engine, comprising:

a fan casing having an inner duct wall which in a fan rotor region is convergent in the downstream direction; and

a fan rotor including a multiplicity of swept fan blades spaced apart around a hub mounted concentrically with respect to the fan duct, each of said swept fan blades having (i) a tip profile which in revolution is convergent so as to substantially correspond to the convergent duct wall, (ii) a leading edge of variable sweep angle which varies with increasing blade height or distance from the axis of rotation, said sweep angle having a forward sweep angle in a first height region between the root and a first intermediate radius, a rearward sweep angle in an intermediate height region between the first intermediate radius and a second intermediate radius, and a sweep angle in a third height region between the second intermediate radius and the tip of the blade such that said third height region is translated forward, and (iii) a stagger angle which increases progressively with blade height.

9. A fan stage of a ducted fan gas turbine engine, comprising:

a fan casing having an inner duct wall which in a fan rotor region is convergent in the downstream direction; and

a fan rotor including a multiplicity of swept fan blades spaced apart around a hub mounted concentrically with respect to the fan duct, each of said swept fan blades having (i) a tip profile which in revolution substantially corresponds to the convergent duct wall, (ii) a leading edge of variable sweep angle which varies with increasing blade height or distance from the axis of rotation, said sweep angle having a forward sweep angle in a first height region between the root and a first intermediate radius, a rearward sweep angle in an intermediate height region between the first intermediate radius and a second intermediate radius, and a forward sweep angle in a third height region between the second intermediate radius and the tip of the blade, and (iii) a stagger angle which increases progressively with blade height.

10. A fan stage of a ducted fan gas turbine engine, comprising

a fan casing having an inner duct wall which in a fan rotor region is convergent in the downstream direction; and

a fan rotor including a multiplicity of swept fan blades spaced apart around a hub mounted concentrically with respect to the fan duct, each of said swept fan blades having a tip profile which in revolution is convergent so as to substantially

correspond to the convergent duct wall, a leading edge of variable sweep angle which varies with increasing blade height or distance from the axis of rotation, said sweep angle having a forward sweep angle in a first height region between the root and a first intermediate radius, a rearward sweep angle in an intermediate height region between the first intermediate radius and a second intermediate radius, a forward sweep angle in a third height region between the second intermediate radius and the tip of the blade, a stagger angle which increases progressively with blade height.

11. A fan stage of a ducted fan gas turbine engine as claimed in claim 10 wherein the blade has a tip region of about 24% of blade height characterized in that the stagger angle increases to less than 90° at the tip relative to the airflow direction.

12. A fan stage of a ducted fan gas turbine engine as claimed in claim 11 wherein in a blade tip region of about 24% of the height of the blade the sweep of the leading edge changes from rearward sweep to forward sweep.

13. A fan stage of a ducted fan gas turbine engine as claimed in claim 11 wherein in a blade tip region of about 24% of the height of the blade the sweep of the leading edge decreases.

14. A fan stage of a ducted fan gas turbine engine as claimed in claim 13 wherein the blade is further characterized in that the stagger angle of the mid-height region of the blade is a predetermined fraction of the stagger angle at the tip region.

15. A fan stage of a ducted fan gas turbine engine as claimed in claim 10 wherein the sweep angle of the leading edge of a swept fan blade at a point on the leading edge is less than the complement of the angle of a Mach cone at any other point on the leading edge of the blade at greater radius from the root.

16. A fan stage of a ducted fan gas turbine engine as claimed in claim 10 wherein the shape of the pressure surface of a swept fan blade and the suction surface thereof creates, in use, a line of minimum static pressure points on the suction surface of the blade, said line of minimum static pressure points is inclined with respect to the axial direction at a sweep angle which varies with span height of the blade, and has a negative value in a region of subsonic flow over the leading edge.

17. A fan stage of a ducted fan gas turbine engine as claimed in claim 16 wherein the sweep angle of the line of minimum pressure points at a point on the line is less than the complement of the angle of a Mach cone at any other point on the line.

18. A fan stage of a ducted gas turbine engine that is at least in part rotatable about an axis of rotation and defines a downstream direction along the axis of rotation, comprising:

a fan casing that defines an inner duct wall having a fan rotor region, the inner duct wall of the fan casing at the fan rotor region being convergent;

a hub disposed concentrically relative to the fan casing;

a fan rotor that includes multiple swept fan blades, the swept fan blades being spaced apart around the hub, each of the multiple swept fan blades having:

a tip profile that is convergent so as to substantially correspond to the convergent inner duct wall of the fan casing;

a leading edge that defines a variable sweep angle in a direction perpendicular to the axis of rotation, the leading edge including:

an inner region adjacent the hub, the inner region defining a forward sweep angle;

an intermediate region between the inner region and the fan casing, the intermediate region defining a rearward sweep angle; and

an outer region between the intermediate region and the fan casing, the outer region defining a forward sweep angle.

19. The fan stage according to claim 18, wherein the intermediate region extends further than the inner region along the axis of rotation.

20. The fan stage according to claim 18, wherein the inner duct wall of the fan casing at the fan rotor region is substantially convergent in the downstream direction.

21. The fan stage according to claim 18, wherein the tip profile of the multiple swept fan blades are substantially convergent in the downstream direction.

22. The fan stage according to claim 18, wherein each of the multiple swept fan blades includes a hub contacting surface that extends further than the tip profile along the axis of rotation.

ABSTRACT

A swept turbomachinery blade for use in a cascade of such blades is disclosed. The blade (12) has an airfoil (22) uniquely swept so that an endwall shock (64) of limited radial extent and a passage shock (66) are coincident and a working medium (48) flowing through interblade passages (56) is subjected to a single coincident shock rather than the individual shocks. In one embodiment of the invention the forwardmost extremity of the airfoil defines an inner transition point (40) located at an inner transition radius $r_{f\text{-inner}}$. The sweep angle of the airfoil is nondecreasing with increasing radius from the inner transition radius to an outer transition radius $r_{f\text{-outer}}$ radially inward of the airfoil tip (26), and is nonincreasing with increasing radius between the outer transition radius and the airfoil tip.

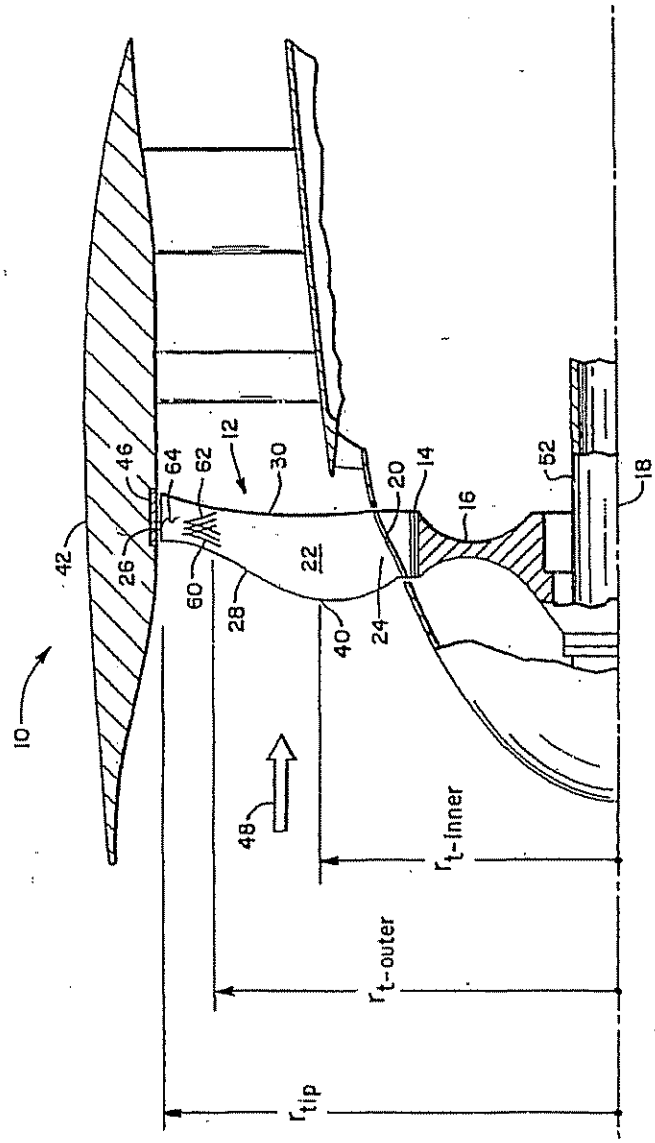
10
12
14
16
18
20
22
24
26
28
30
40
42
46
48
52
60
62
64
$r_{t\text{-}inner}$
$r_{t\text{-}outer}$
r_{tip}

FIG. 1

FIG. 2

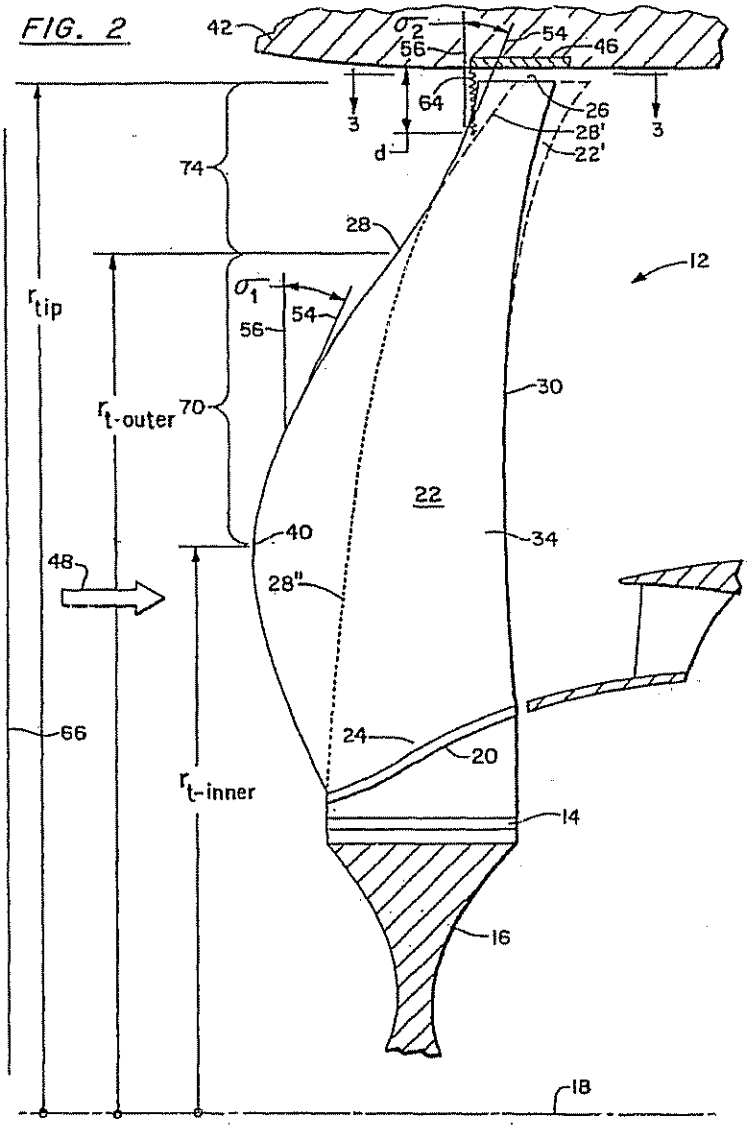
42
σ_2
56
54
46
3
64
26
28'
22'
3
d
74
28
12
σ_1
54
56
r_{tip}
$r_{t\text{-}outer}$
70
30
22
40
34
48
28"
66
24
20
$r_{t\text{-}inner}$
14
16
18

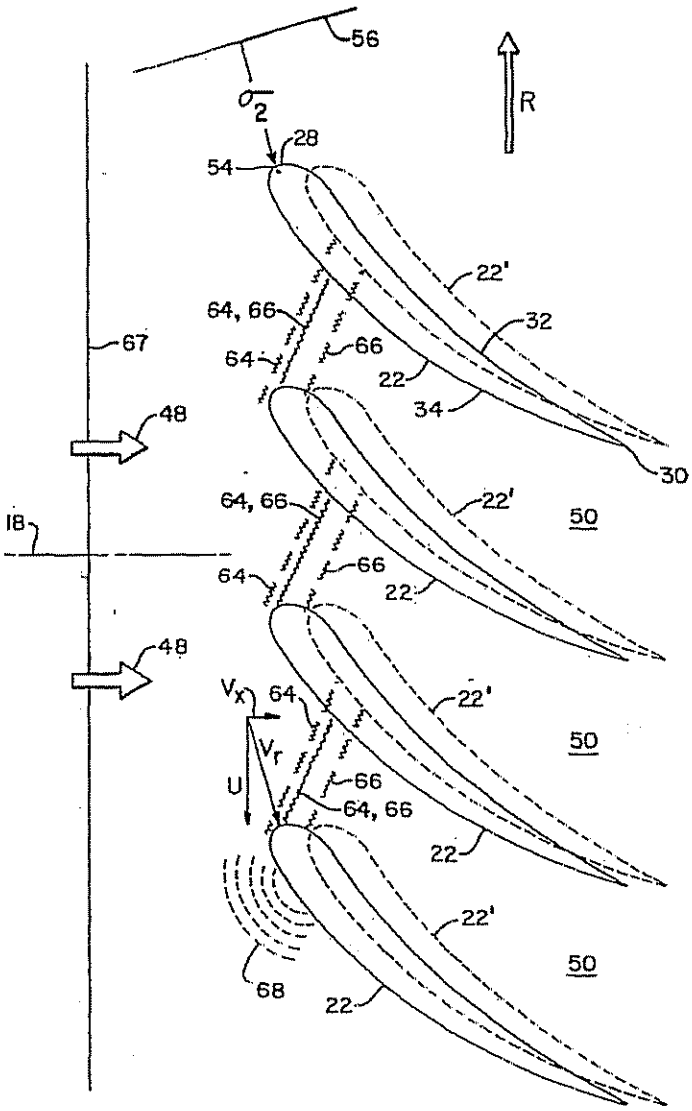
56
σ_2
R
28
54
22'
64, 66
32
67
64
66
22
34
30
48
64, 66
22'
50
18
64
66
22
48
V_x
64
22'
V_r
50
U
66
64, 66
22
22'
50
68
22

FIG. 3

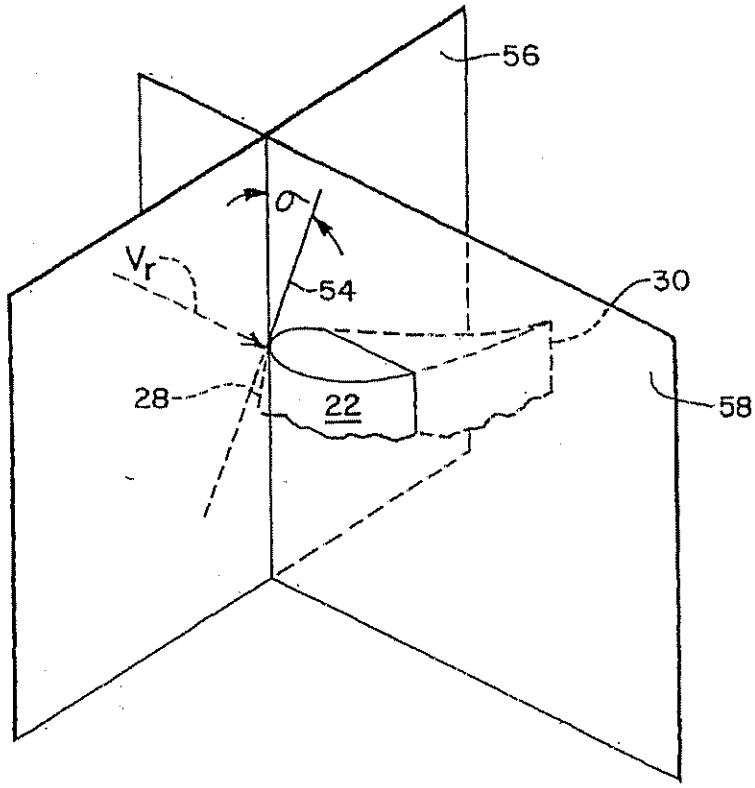

FIG. 4

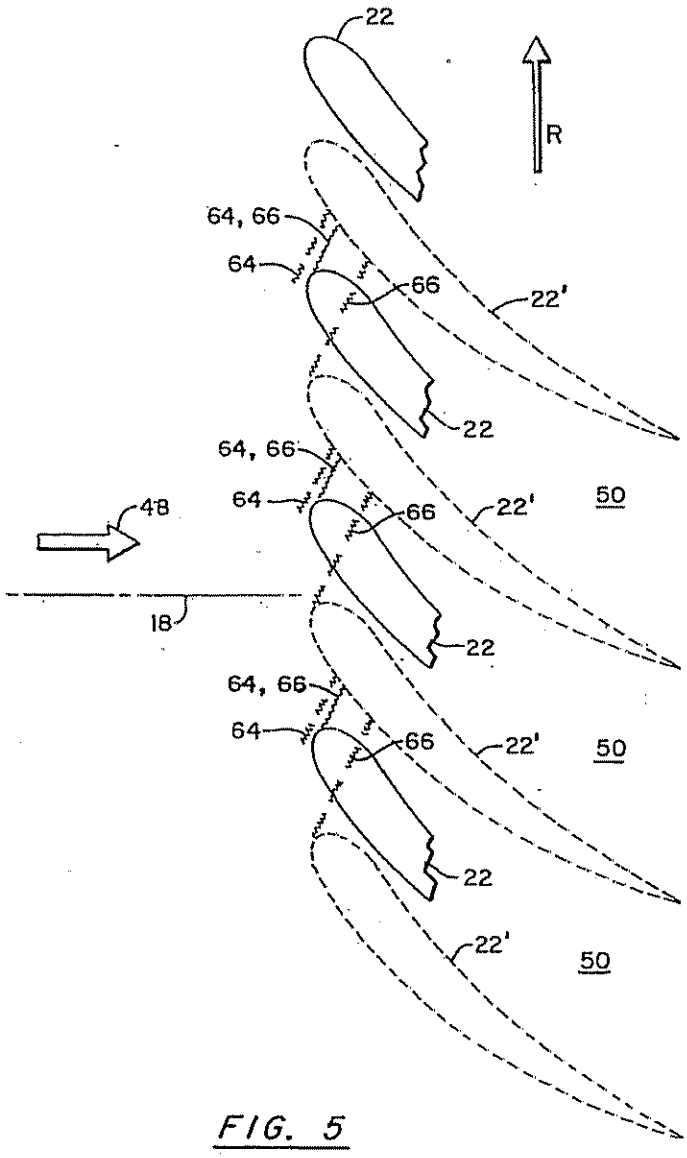
22
R
64, 66
64
66
22'
22
64, 66
64
66
22'
50
48
18
22
64, 66
64
66
22'
50
22
22'
50

FIG. 5

FIG. 6

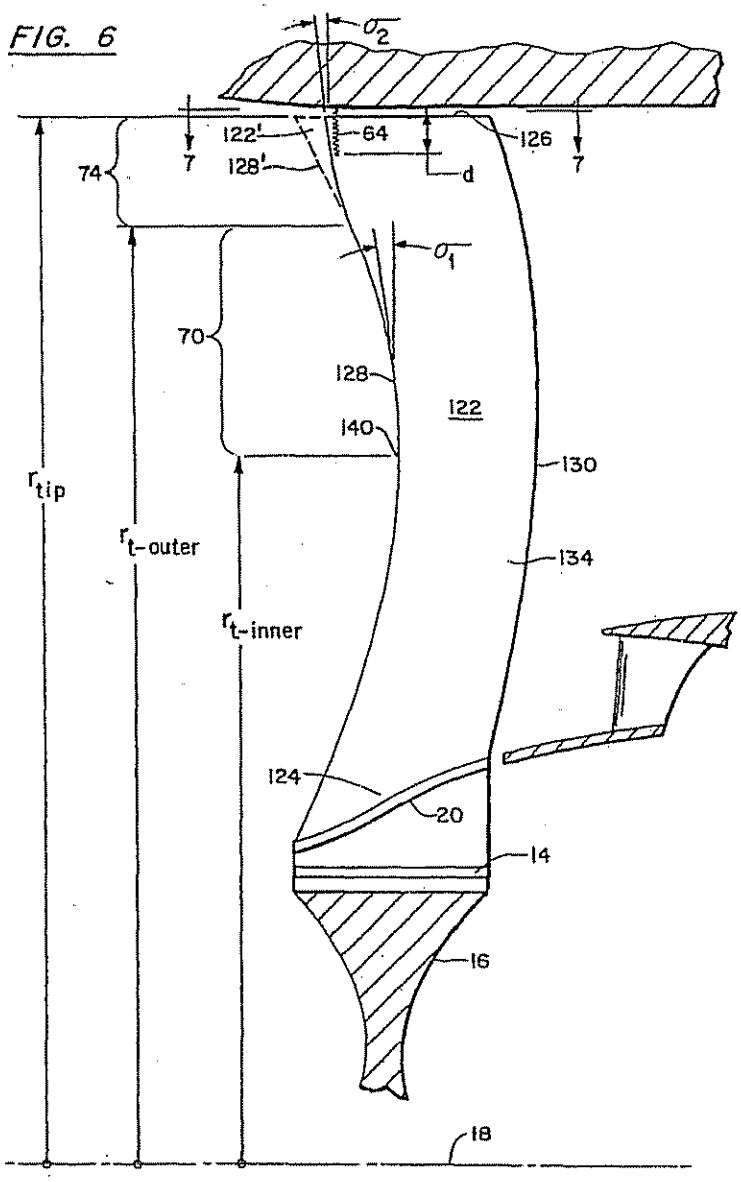
σ_2
122'
64
126
7
7
74
128'
d
σ_1
70
128
122
140
130
r_{tip}
$r_{t-outer}$
134
$r_{t-inner}$
124
20
14
16
18

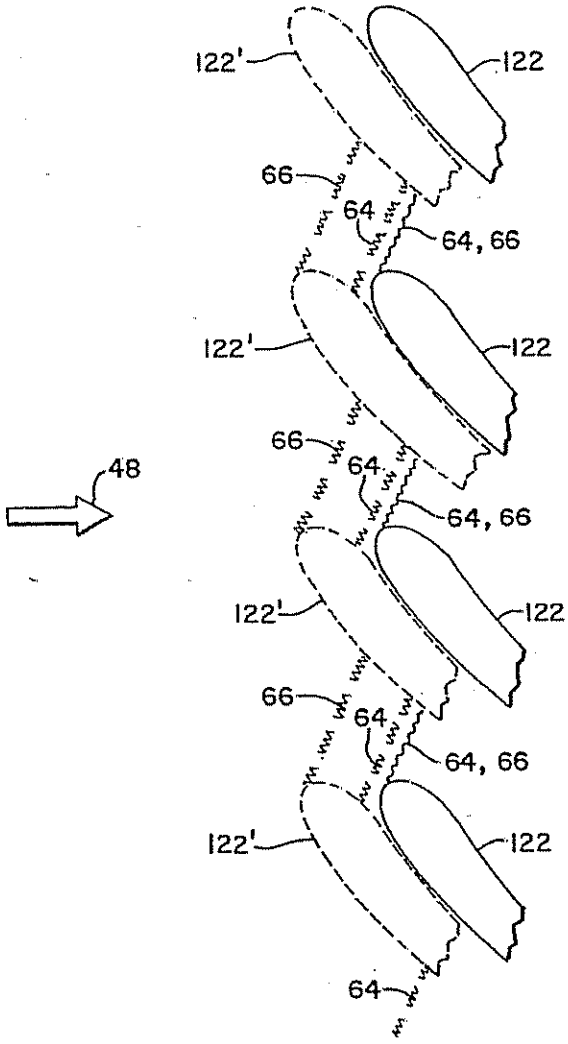
122'
122
66
64
64, 66
122'
122
66
64
64, 66
48
122'
122
66
64
64, 66
122'
122
64

FIG. 7

PRINT OF DRAWINGS
AS ORIGINALLY FILED

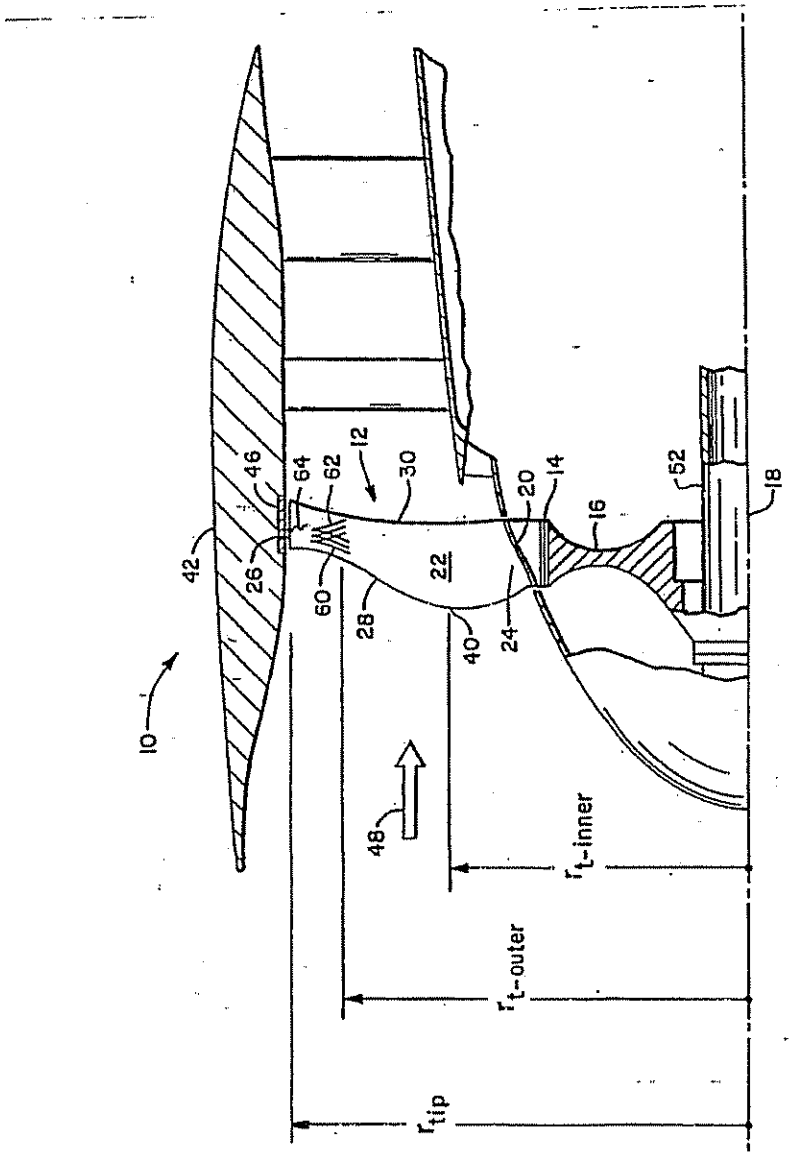

FIG. 1

PRINT OF DRAWINGS
AS ORIGINALLY FILED

FIG. 2

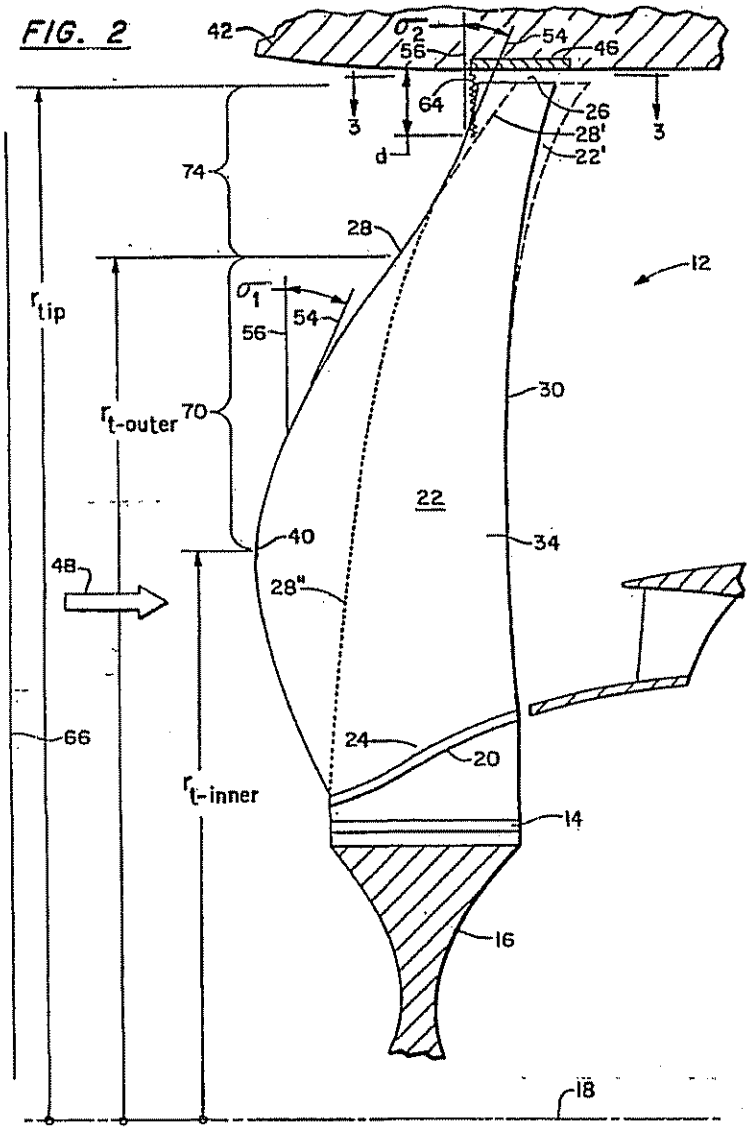

PRINT OF DRAWINGS
AS ORIGINALLY FILED

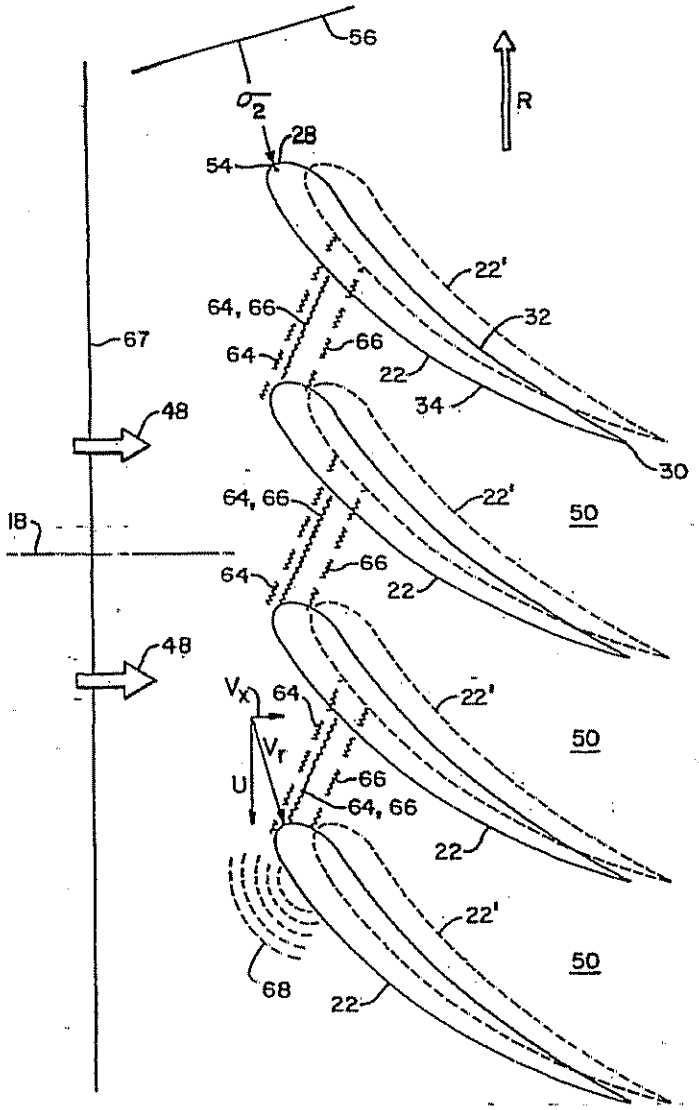

FIG. 3

PRINT OF DRAWINGS
AS ORIGINALLY FILED

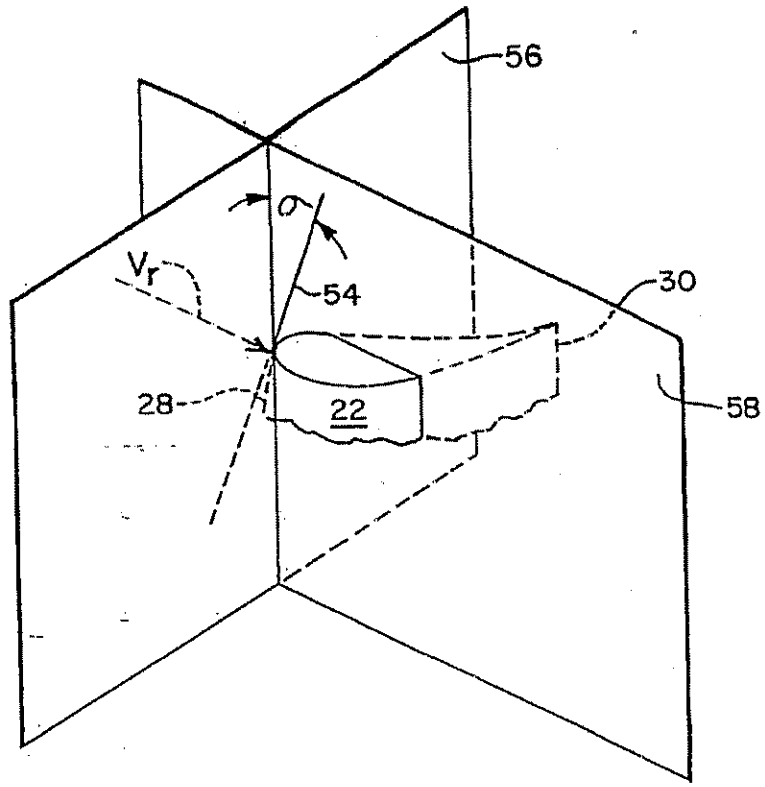

FIG. 4

PRINT OF DRAW S
AS ORIGINALLY ED

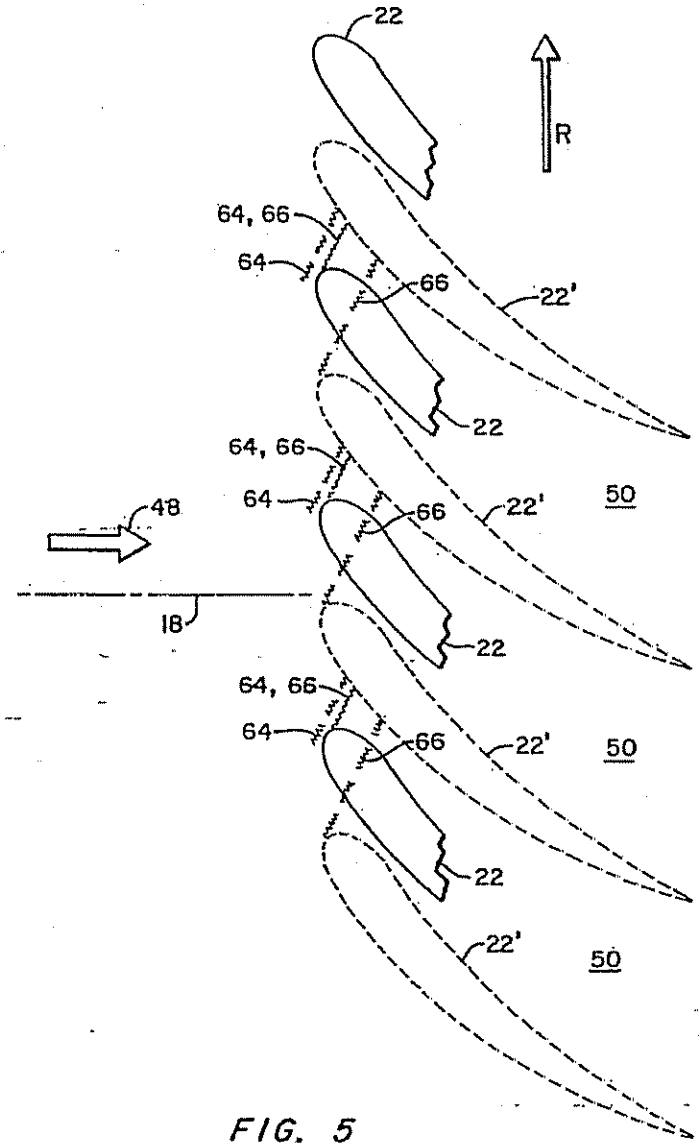

FIG. 5

PRINT OF DRAWINGS
AS ORIGINALLY FILED

FIG. 6

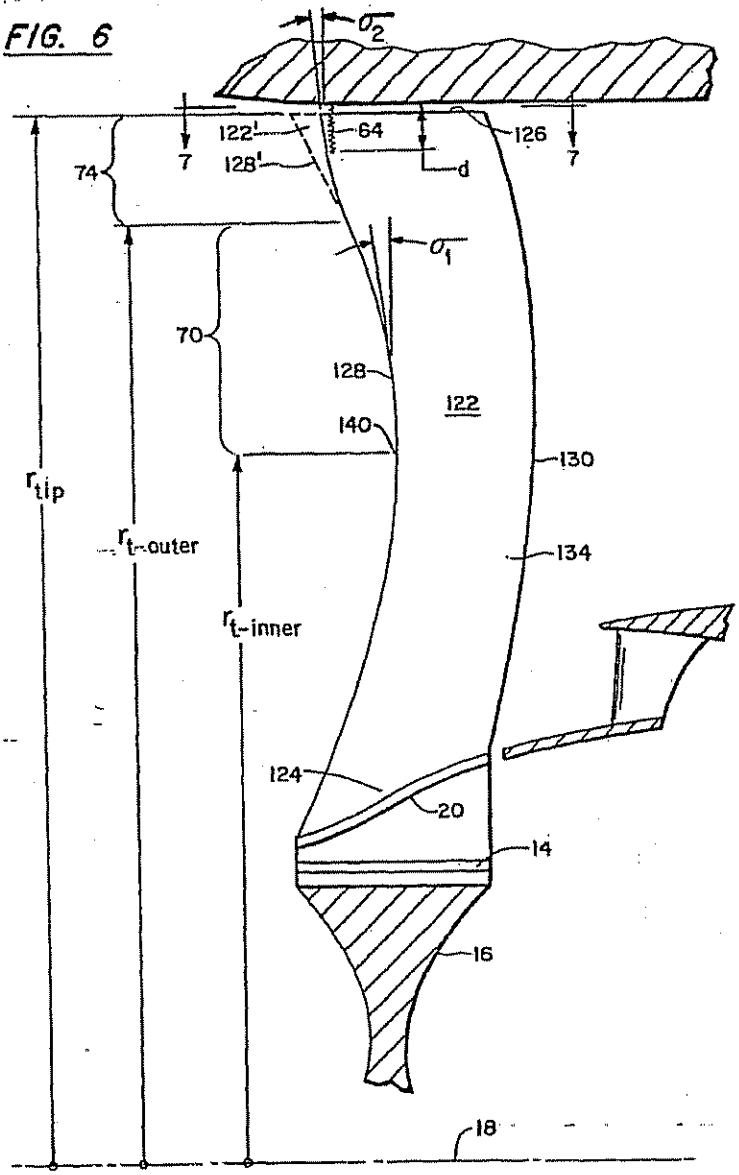

PRINT OF DRAWINGS
AS ORIGINALLY FILED

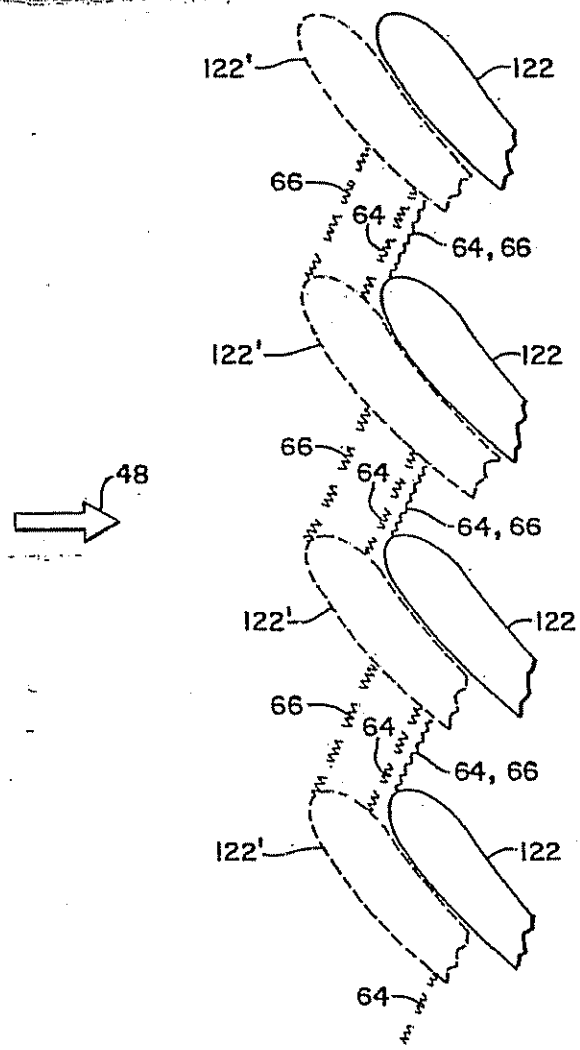

FIG. 7

PRINT OF DRAWINGS
AS ORIGINALLY FILED

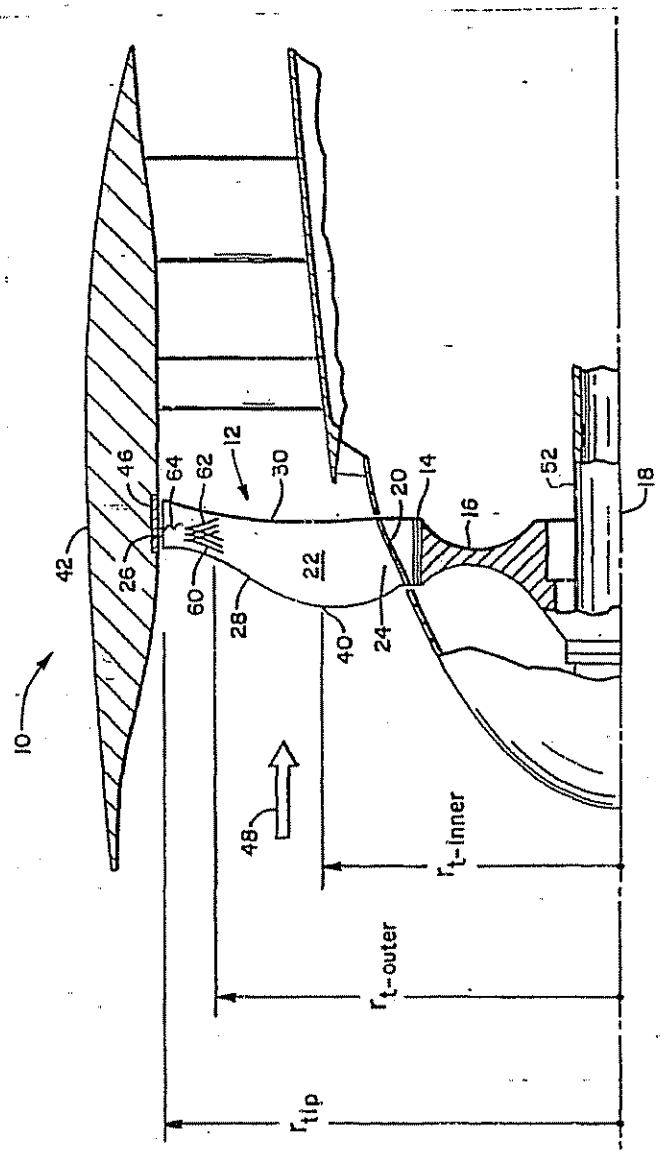

FIG. 1

PRINT OF DRAWINGS
AS ORIGINALLY FILED

FIG. 2

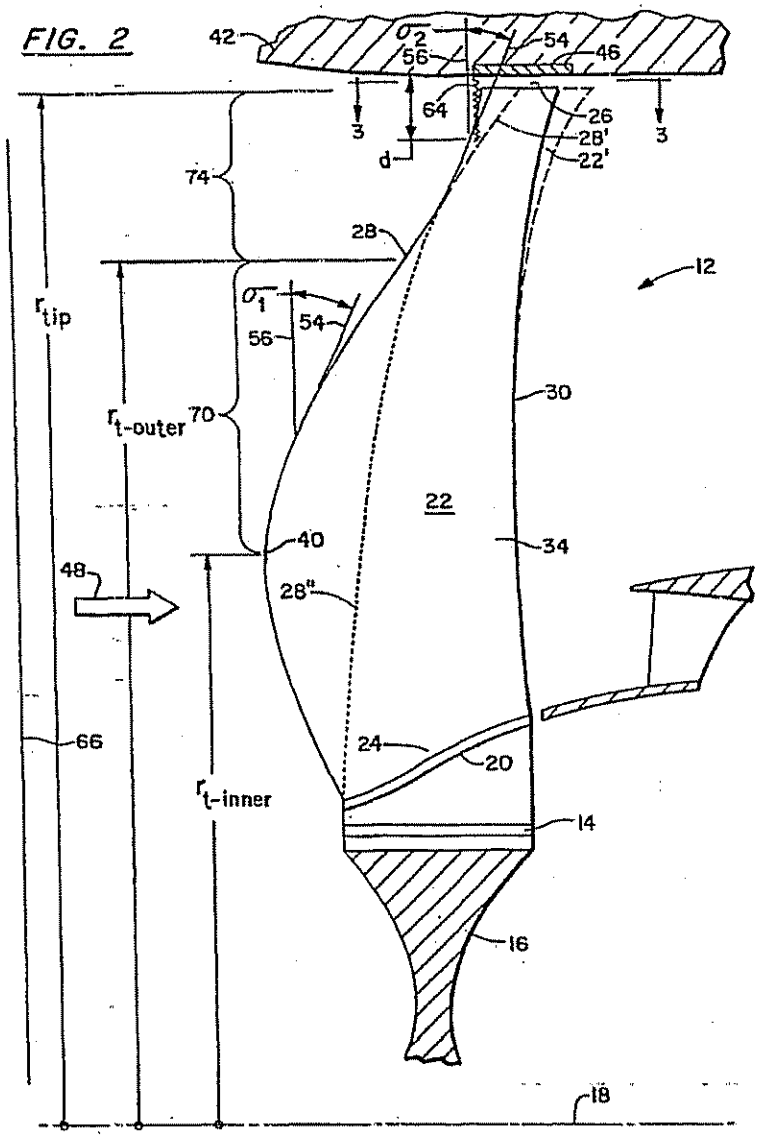

PRINT OF DRAWINGS
AS ORIGINALLY FILED

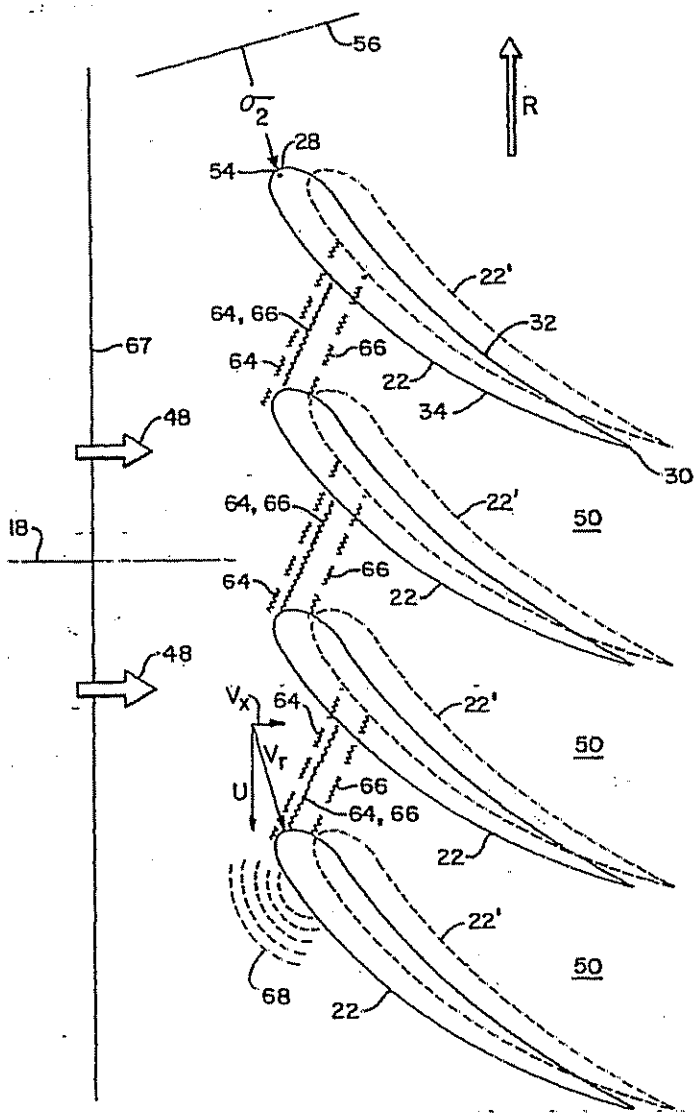

FIG. 3

PRINT OF DRAWINGS
AS ORIGINALLY FILED

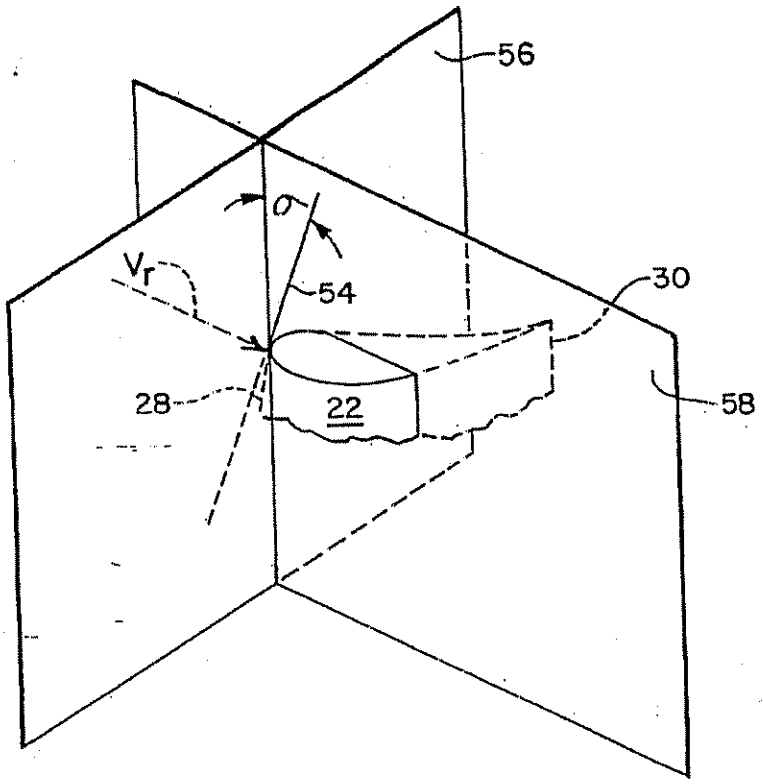

FIG. 4

PRINT OF DRAWINGS
AS ORIGINALLY FILED

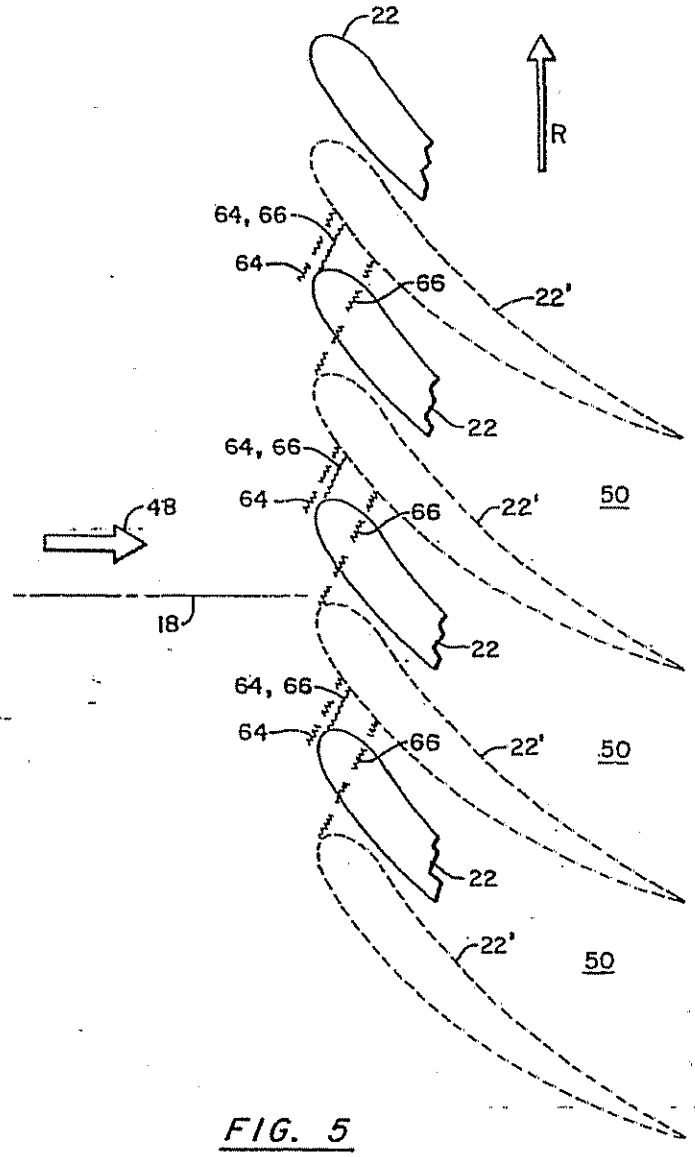

FIG. 5

PRINT OF DRAWINGS
AS ORIGINALLY FILED

FIG. 6

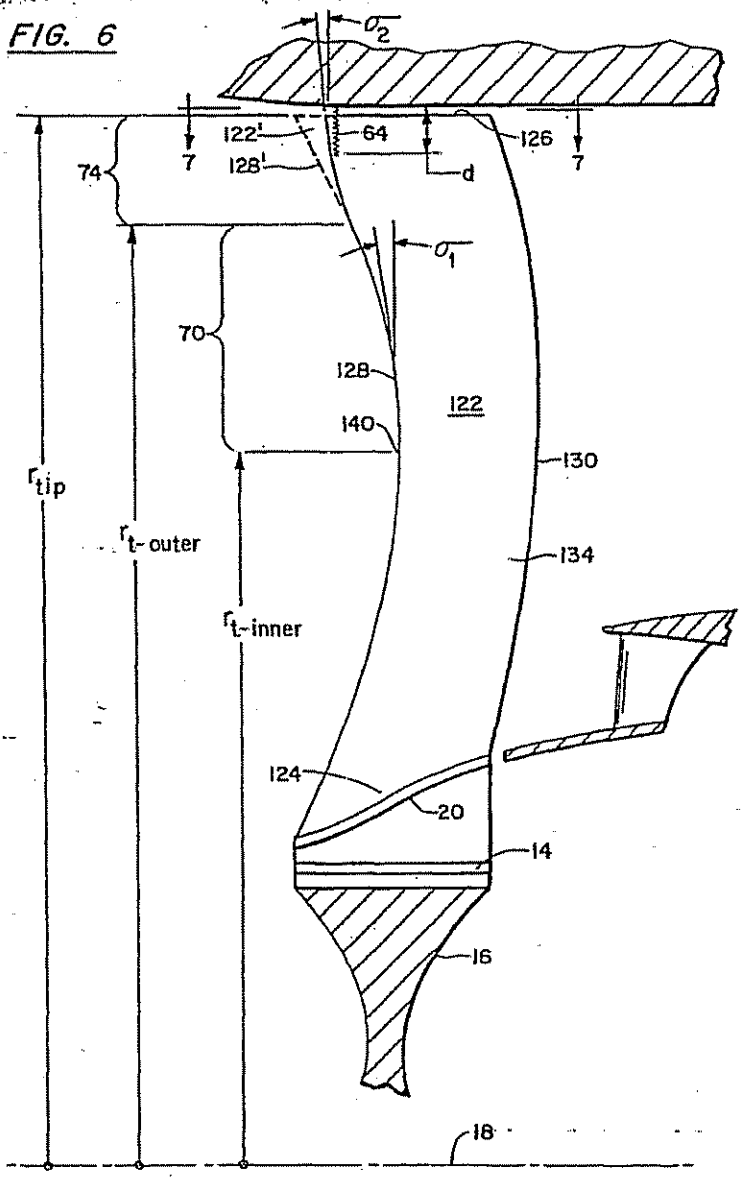

PRINT OF DRAWINGS
AS ORIGINALLY FILED

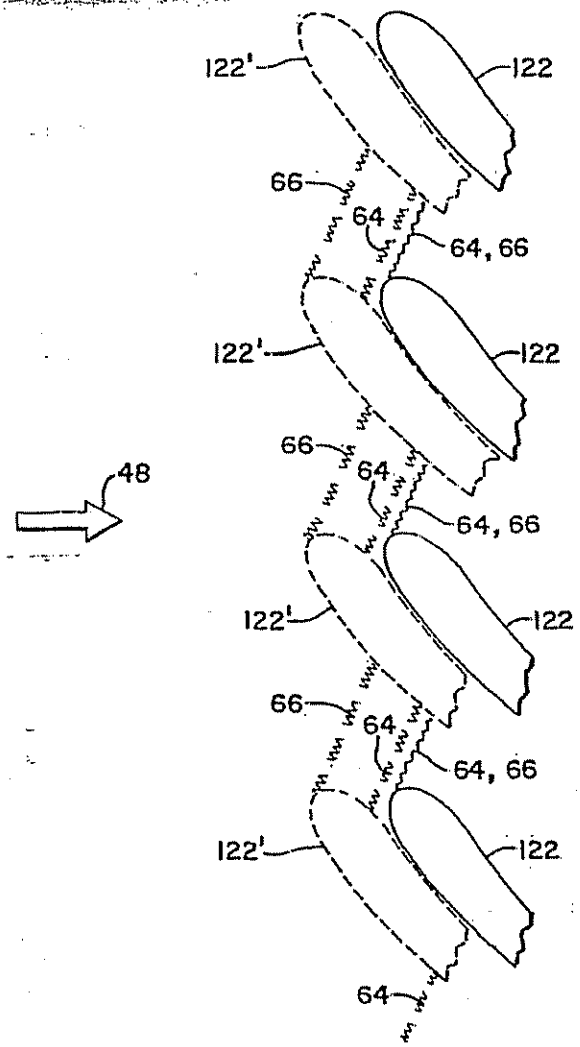

FIG. 7

US005642985A

United States Patent [19]

Spear et al.

[11] Patent Number: 5,642,985

[45] Date of Patent: Jul. 1, 1997

11046 U.S. PTO
09/871931
06/05/01

[54] SWEPT TURBOMACHINERY BLADE

[75] Inventors: David A. Spear, Manchester; Bruce P. Biederman, Meriden, both of Conn.; John A. Orosa, Palm Beach Gardens, Fla.

[73] Assignee: United Technologies Corporation, Hartford, Conn.

[21] Appl. No.: 559,965

[22] Filed: Nov. 17, 1995

[51] Int. Cl.[6] F01D 5/14

[52] U.S. Cl. 416/238; 415/181; 416/242

[58] Field of Search 415/181, 220; 416/238, 242, 243

[56] References Cited

U.S. PATENT DOCUMENTS

1,964,525	6/1934	McMahan	170/159
2,154,313	4/1939	McMahan	230/274
2,915,238	12/1959	Szydlowski	230/134
2,934,259	4/1960	Hausmann	415/181
2,935,246	5/1960	Roy	415/181
3,416,725	12/1968	Bobenon	230/259
3,444,817	5/1969	Caldwell	103/88
3,692,425	9/1972	Erwin	415/181
3,989,406	11/1976	Bliss	415/1
4,012,172	3/1977	Schwaar et al.	416/228
4,358,246	11/1982	Hanson et al.	416/223 R
4,408,957	10/1983	Kurzrock et al.	415/181
4,726,737	2/1988	Weingold et al.	416/223 A
4,737,077	4/1988	Vera	416/242
4,784,575	11/1988	Nelson et al.	416/226
5,112,192	5/1992	Weetman	416/201 A
5,167,489	12/1992	Wadia et al.	415/182.1

FOREIGN PATENT DOCUMENTS

1528965	12/1989	U.S.S.R.	416/242

Primary Examiner—Edward K. Look
Assistant Examiner—Mark Sgantzos
Attorney, Agent, or Firm—Kenneth C. Baran

[57] ABSTRACT

A swept turbomachinery blade for use in a cascade of such blades is disclosed. The blade (12) has an airfoil (22) uniquely swept so that an endwall shock (64) of limited radial extent and a passage shock (66) are coincident and a working medium (48) flowing through interblade passages (50) is subjected to a single coincident shock rather than the individual shocks. In one embodiment of the invention the forwardmost extremity of the airfoil defines an inner transition point (40) located at an inner transition radius $r_{t\text{-}inner}$. The sweep angle of the airfoil is nondecreasing with increasing radius from the inner transition radius to an outer transition radius $r_{t\text{-}outer}$, radially inward of the airfoil tip (26), and is nonincreasing with increasing radius between the outer transition radius and the airfoil tip.

3 Claims, 7 Drawing Sheets

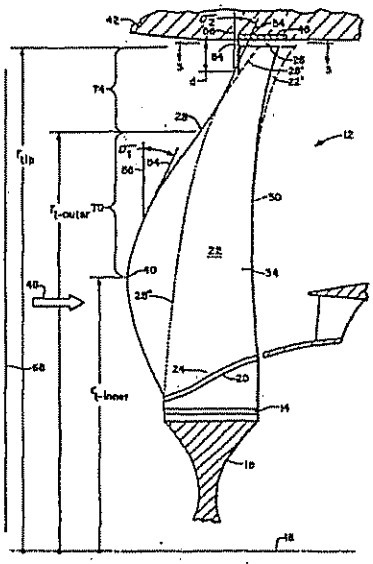

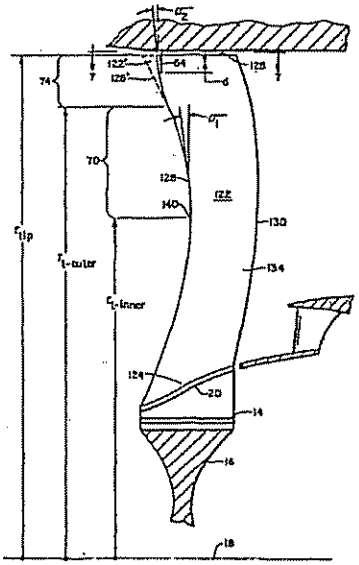

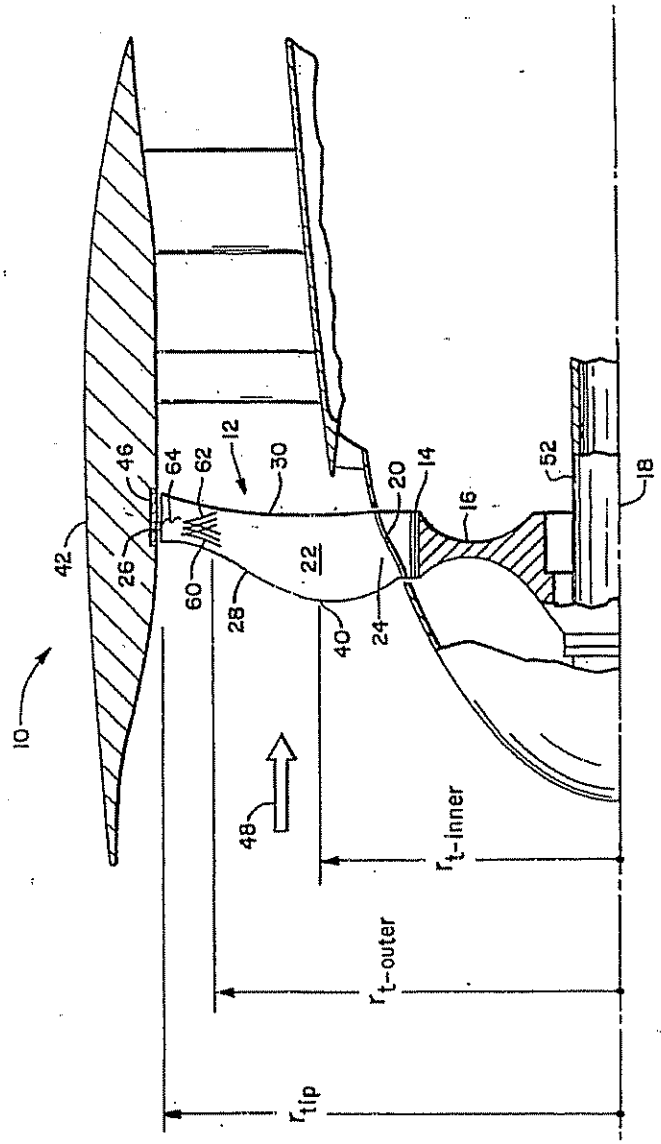
10
42
46
64
62
12
30
20
14
16
52
18
26
60
28
22
40
24
48
$r_{t\text{-inner}}$
$r_{t\text{-outer}}$
r_{tip}

FIG. 1

FIG. 2

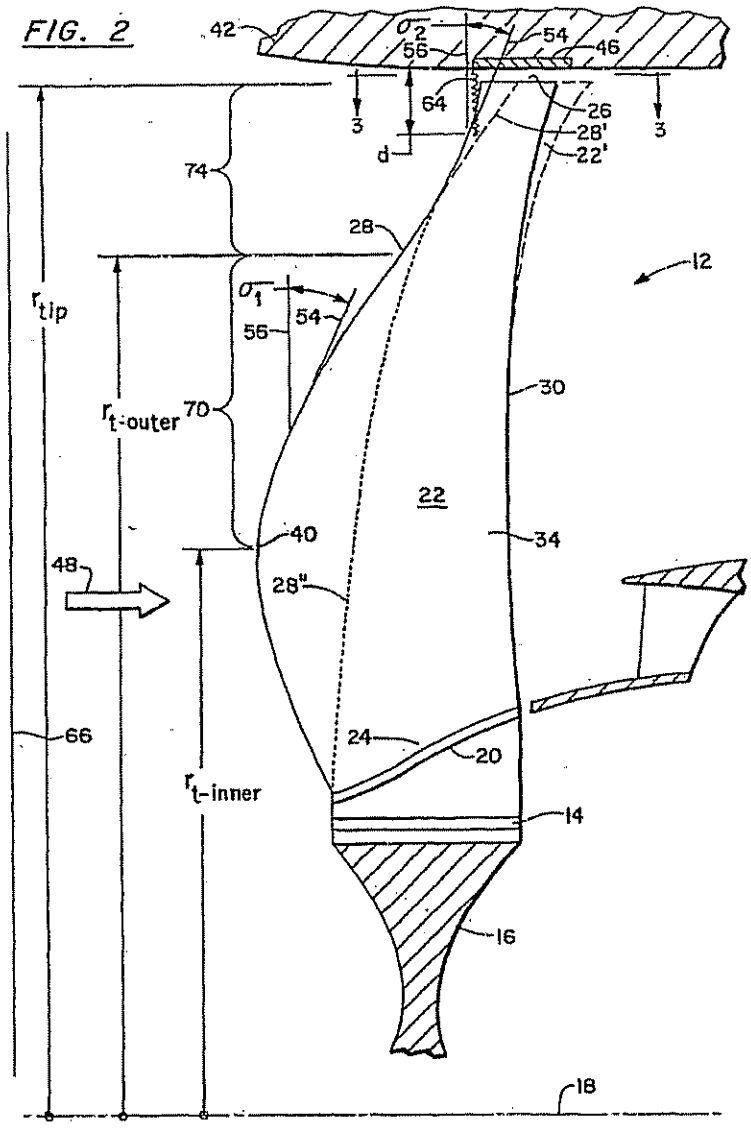
42
σ_2
56
54
46
64
3
3
d
26
28'
22'
74
28
12
σ_1
54
56
r_{tip}
$r_{t-outer}$
70
30
22
40
34
48
28"
66
24
20
$r_{t-inner}$
14
16
18

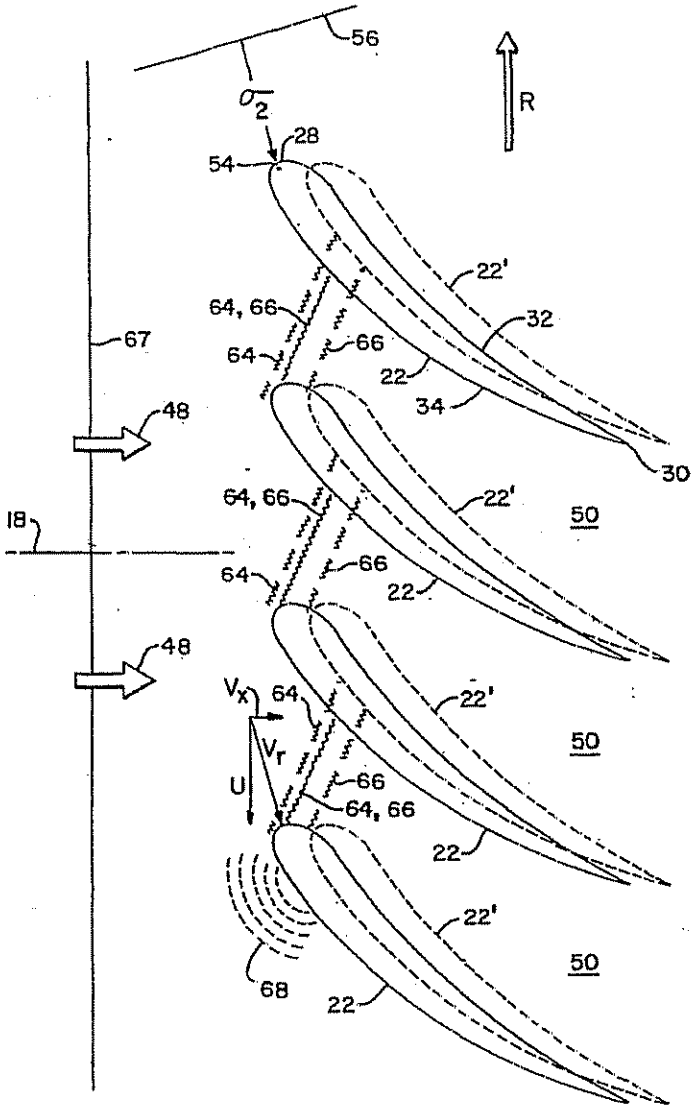
56
O_2
R
28
54
22'
64, 66
32
67
64
66
22
34
30
48
64, 66
22'
50
18
64
66
22
48
V_x
64
22'
V_r
50
U
66
64, 66
22
22'
50
68
22

FIG. 3

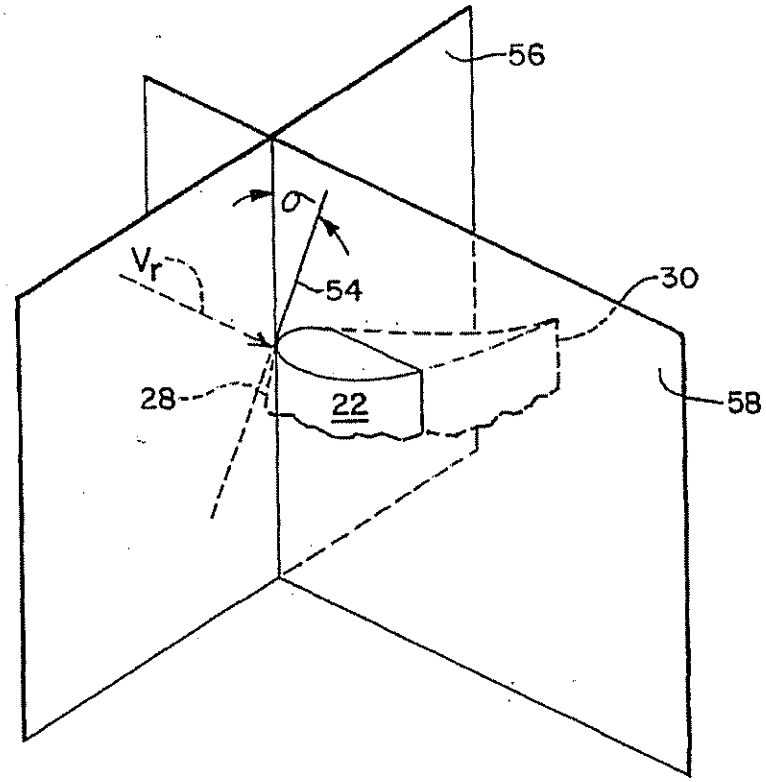

FIG. 4

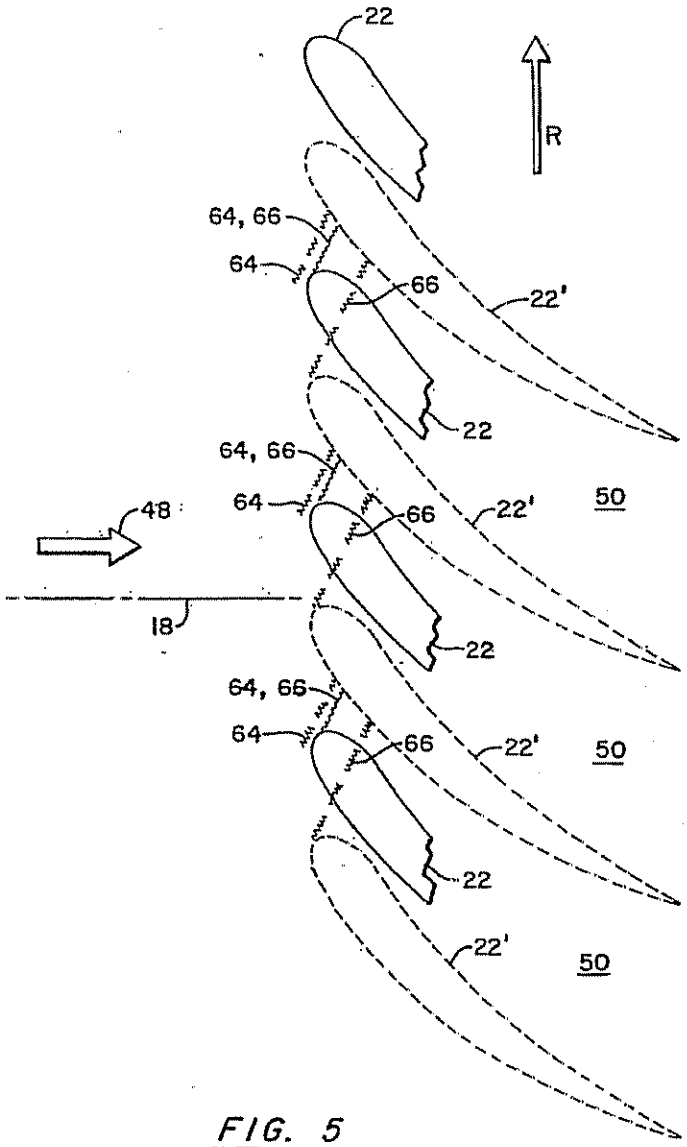
22
R
64, 66
64
66
22'
22
64, 66
64
66
22'
50
48
18
22
64, 66
64
66
22'
50
22
22'
50

FIG. 5

FIG. 6

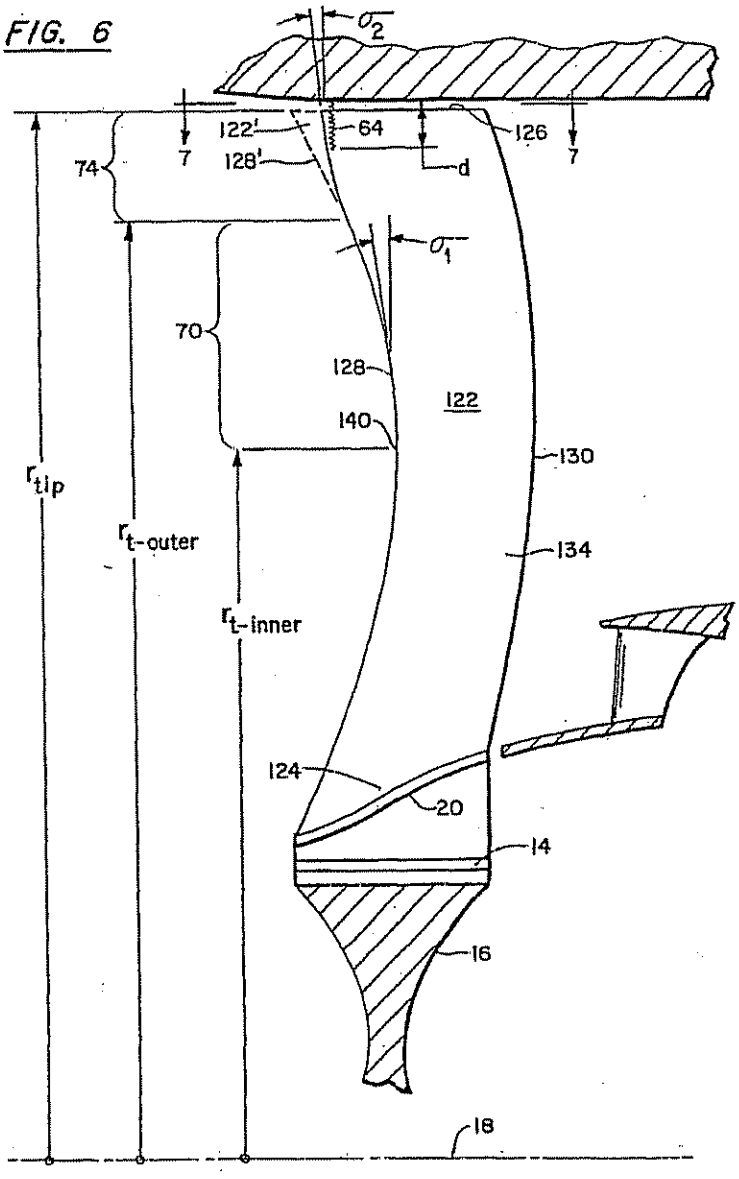
σ2
122'
64
126
7
128'
d
7
74
σ1
70
128
122
140
130
r tip
r t-outer
134
r t-inner
124
20
14
16
18

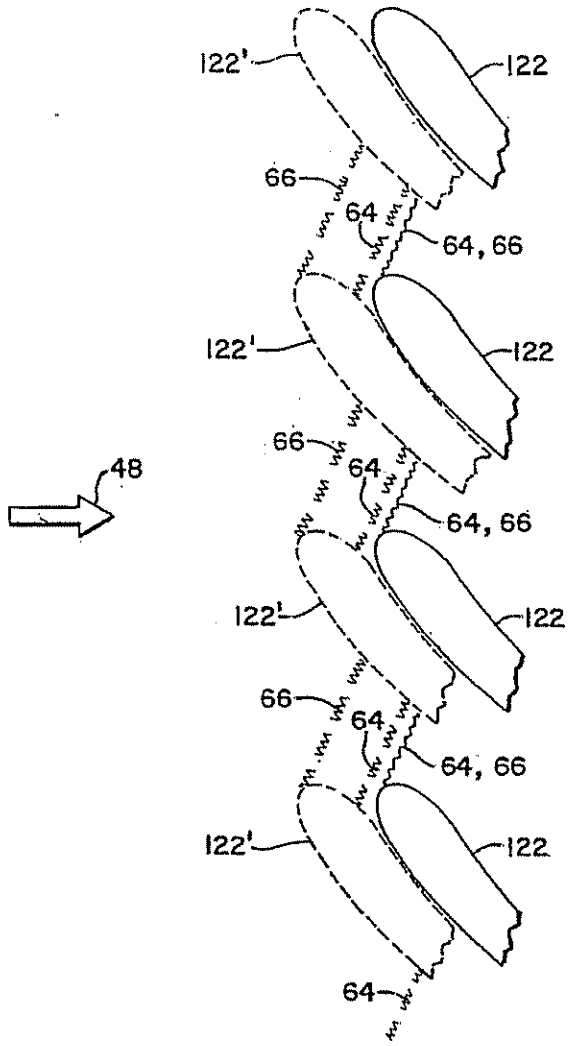
122'
122
66
64
64, 66
122'
122
66
64
64, 66
48
122'
122
66
64
64, 66
122'
122
64

FIG. 7

SWEPT TURBOMACHINERY BLADE

TECHNICAL FIELD

This invention relates to turbomachinery blades, and particularly to blades whose airfoils are swept to minimize the adverse effects of supersonic flow of a working medium over the airfoil surfaces.

BACKGROUND OF THE INVENTION

Gas turbine engines employ cascades of blades to exchange energy with a compressible working medium gas that flows axially through the engine. Each blade in the cascade has an attachment which engages a slot in a rotatable hub so that the blades extend radially outward from the hub. Each blade has a radially extending airfoil, and each airfoil cooperates with the airfoils of the neighboring blades to define a series of interblade flow passages through the cascade. The radially outer boundary of the flow passages is formed by a case which circumscribes the airfoil tips. The radially inner boundary of the passages is formed by abutting platforms which extend circumferentially from each blade.

During engine operation the hub, and therefore the blades attached thereto, rotate about a longitudinally extending rotational axis. The velocity of the working medium relative to the blades increases with increasing radius. Accordingly, it is not uncommon for the airfoil leading edges to be swept forward or swept back to mitigate the adverse aerodynamic effects associated with the compressibility of the working medium at high velocities.

One disadvantage of a swept blade results from pressure waves which extend along the span of each airfoil suction surface and reflect off the surrounding case. Because the airfoil is swept, both the incident waves and the reflected waves are oblique to the case. The reflected waves interact with the incident waves and coalesce into a planar aerodynamic shock which extends across the interblade flow channel between neighboring airfoils. These "endwall shocks" extend radially inward a limited distance from the case. In addition, the compressibility of the working medium causes a passage shock, which is unrelated to the above described endwall shock, to extend across the passage from the leading edge of each blade to the suction surface of the adjacent blade. As a result, the working medium gas flowing into the channels encounters multiple shocks and experiences unrecoverable losses in velocity and total pressure, both of which degrade the engine's efficiency. What is needed is a turbomachinery blade whose airfoil is swept to mitigate the effects of working medium compressibility while also avoiding the adverse influences of multiple shocks.

DISCLOSURE OF THE INVENTION

It is therefore an object of the invention to minimize the aerodynamic losses and efficiency degradation associated with endwall shocks by limiting the number of shocks in each interblade passage.

According to the invention, a blade for a blade cascade has an airfoil which is swept over at least a portion of its span, and the section of the airfoil radially coextensive with the endwall shock intercepts the endwall shock extending from the neighboring airfoil so that the endwall shock and the passage shock are coincident.

In one embodiment the axially forwardmost extremity of the airfoil's leading edge defines an inner transition point located at an inner transition radius radially inward of the airfoil tip. An outer transition point is located at an outer transition radius radially intermediate the inner transition radius and the airfoil tip. The outer transition radius and the tip bound a blade tip region while the inner and outer transition radii bound an intermediate region. The leading edge is swept at a first sweep angle in the intermediate region and is swept at a second sweep angle over at least a portion of the tip region. The first sweep angle is generally nondecreasing with increasing radius and the second sweep angle is generally non-increasing with increasing radius.

The invention has the advantage of limiting the number of shocks in each interblade passage so that engine efficiency is maximized.

BRIEF DESCRIPTION OF THE DRAWINGS

FIG. 1 is a cross sectional side elevation of the fan section of a gas turbine engine showing a swept back fan blade according to the present invention.

FIG. 2 is an enlarged view of the blade of FIG. 1 including an alternative leading edge profile shown by dotted lines and a prior art blade shown in phantom.

FIG. 3 is a developed view taken along the line 3—3 of FIG. 2 illustrating the tips of four blades of the present invention along with four prior art blades shown in phantom.

FIG. 4 is a schematic perspective view of an airfoil fragment illustrating the definition of sweep angle.

FIG. 5 is a developed view similar to FIG. 3 illustrating an alternative embodiment of the invention and showing prior art blades in phantom.

FIG. 6 is a cross sectional side elevation of the fan section of a gas turbine engine showing a forward swept fan blade according to the present invention and showing a prior art fan blade in phantom.

FIG. 7 is a developed view taken along the line 7—7 of FIG. 6 illustrating the tips of four blades of the present invention along with four prior art blades shown in phantom.

BEST MODE FOR CARRYING OUT THE INVENTION

Referring to FIGS. 1–3, the forward end of a gas turbine engine includes a fan section 10 having a cascade of fan blades 12. Each blade has an attachment 14 for attaching the blade to a disk or hub 16 which is rotatable about a longitudinally extending rotational axis 18. Each blade also has a circumferentially extending platform 20 radially outward of the attachment. When installed in an engine, the platforms of neighboring blades in the cascade abut each other to form the cascade's inner flowpath boundary. An airfoil 22 extending radially outward from each platform has a root 24, a tip 26, a leading edge 28, a trailing edge 30, a pressure surface 32 and a suction surface 34. The axially forwardmost extremity of the leading edge defines an inner transition point 40 at an inner transition radius r_{inner}, radially inward of the tip. The blade cascade is circumscribed by a case 42 which forms the cascade's outer flowpath boundary. The case includes a rubstrip 46 which partially abrades away in the event that a rotating blade contacts the case during engine operation. A working medium fluid such as air 48 is pressurized as it flows axially through interblade passages 50 between neighboring airfoils.

The hub 16 is attached to a shaft 52. During engine operation, a turbine (not shown) rotates the shaft, and therefore the hub and the blades, about the axis 18 in direction R. Each blade, therefore, has a leading neighbor

which precedes it and a trailing neighbor which follows it during rotation of the blades about the rotational axis.

The axial velocity V_a (FIG. 3) of the working medium is substantially constant across the radius of the flowpath. However the linear velocity U of a rotating airfoil increases with increasing radius. Accordingly, the relative velocity V_r of the working medium at the airfoil leading edge increases with increasing radius, and at high enough rotational speeds, the airfoil experiences supersonic working medium flow velocities in the vicinity of its tip. Supersonic flow over an airfoil, while beneficial for maximizing the pressurization of the working medium, has the undesirable effect of reducing fan efficiency by introducing losses in the working medium's velocity and total pressure. Therefore, it is typical to sweep the airfoil's leading edge over at least a portion of the blade span so that the working medium velocity component in the chordwise direction (perpendicular to the leading edge) is subsonic. Since the relative velocity V_r increases with increasing radius, the sweep angle typically increases with increasing radius as well. As shown in FIG. 4, the sweep angle σ at any arbitrary radius is the acute angle between a line 54 tangent to the leading edge 28 of the airfoil 22 and a plane 56 perpendicular to the relative velocity vector V_r. The sweep angle is measured in plane 58 which contains both the relative velocity vector and the tangent line and is perpendicular to plane 56. In conformance with this definition sweep angles σ_1 and σ_2, referred to hereinafter and illustrated in FIGS. 2, 3 and 6 are shown as projections of the actual sweep angle onto the plane of the illustrations.

Sweeping the blade leading edge, while useful for minimizing the adverse effects of supersonic working medium velocity, has the undesirable side effect of creating an endwall reflection shock. The flow of the working medium over the blade suction surface generates pressure waves 60 (shown only in FIG. 1) which extend along the span of the blade and reflect off the case. The reflected waves 62 and the incident waves 60 coalesce in the vicinity of the case to form an endwall shock 64 across each interblade passage. The endwall shock extends radially inward a limited distance, d, from the case. As best seen in the prior art (phantom) illustration of FIG. 3, each endwall shock is also oblique to a plane 67 perpendicular to the rotational axis so that the shock extends axially and circumferentially. In principle, an endwall shock can extend across multiple interblade passages and affect the working medium entering those passages. In practice, expansion waves (as illustrated by the representative waves 68) propagate axially forward from each airfoil and weaken the endwall shock from the airfoil's leading neighbor so that each endwall shock usually affects only the passage where the endwall shock originated. In addition, the supersonic character of the flow causes passage shocks 66 to extend across the passages. The passage shocks, which are unrelated to endwall reflections, extend from the leading edge of each blade to the suction surface of the blade's leading neighbor. Thus, the working medium is subjected to the aerodynamic losses of multiple shocks with a corresponding degradation of engine efficiency.

The endwall shock can be eliminated by making the case wall perpendicular to the incident expansion waves so that the incident waves coincide with their reflections. However other design considerations, such as constraints on the flowpath area and limitations on the case construction, may make this option unattractive or unavailable. In circumstances where the endwall shock cannot be eliminated, it is desirable for the endwall shock to coincide with the passage shock since the aerodynamic penalty of coincident shocks is less than that of multiple individual shocks.

According to the present invention, coincidence of the endwall shock and the passage shock is achieved by uniquely shaping the airfoil so that the airfoil intercepts the endwall shock extending from the airfoil's leading neighbor and results in coincidence between the endwall shock and the passage shock.

A swept back airfoil according to the present invention has a leading edge 28, a trailing edge 30, a root 24 and a tip 26 located at a tip radius r_{tip}. An inner transition point 40 located at an inner transition radius r_i-inner is the axially forwardmost point on the leading edge. The leading edge of the airfoil is swept back by a radially varying first sweep angle σ_1 in an intermediate region 70 of the airfoil (in FIG. 2 plane 56 appears as the line defined by the plane's intersection with the plane of the illustration and in FIG. 3 the tangent line 54 appears as the point where the tangent line penetrates the plane of the Figure). The intermediate region 70 is the region radially bounded by the inner transition radius r_i-inner and the outer transition radius r_i-outer. The first sweep angle, as is customary in the art, is nondecreasing with increasing radius, i.e. the sweep angle increases, or at least does not decrease, with increasing radius.

The leading edge 28 of the airfoil is also swept back by a radially varying second sweep angle σ_2 in a tip region 74 of the airfoil. The tip region is radially bounded by the outer transition radius r_i-outer and a tip radius r_{tip}. The second sweep angle is nonincreasing (decreases, or at least does not increase) with increasing radius. This is in sharp contrast to the prior art airfoil 22' whose sweep angle increases with increasing radius radially outward of the inner transition radius.

The beneficial effect of the invention is appreciated primarily by reference to FIG. 3 which compares the invention (and the associated endwall and passage shocks) to a prior art blade (and its associated shocks) shown in phantom. Referring first to the prior art illustration in phantom, the endwall shock 64 originates as a result of the pressure waves 60 (FIG. 1) extending along the suction surface of each blade. Each endwall shock is oblique to a plane 67 perpendicular to the rotational axis, and extends across the interblade passage of origin. The passage shock 66 also extends across the flow passage from the leading edge of a blade to the suction surface of the blade's leading neighbor. The working medium entering the passages is therefore adversely influenced by multiple shocks. By contrast, the nonincreasing character of the second sweep angle of a swept back airfoil 22 according to the invention causes a portion of the airfoil leading edge to be far enough forward (upstream) in the working medium flow that the section of the airfoil radially coextensive with the endwall shock extending from the airfoil's leading neighbor intercepts the endwall shock 64 (the unique sweep of the airfoil does not appreciably affect the location or orientation of the endwall shock; the phantom endwall shock associated with the prior art blade is illustrated slightly upstream of the endwall shock for the airfoil of the invention for illustrative clarity). In addition, the passage shock 66 (which remains attached to the airfoil leading edge and therefore is translated forward along with the leading edge) is brought into coincidence with the endwall shock so that the working medium does not encounter multiple shocks.

The embodiment of FIGS. 2 and 3 illustrates a blade whose leading edge, in comparison to the leading edge of a conventional blade, has been translated axially forward parallel to the rotational axis (the corresponding translation of the trailing edge is an illustrative convenience—the

location of the trailing edge is not embraced by the invention). However the invention contemplates any blade whose airfoil intercepts the endwall shock to bring the passage shock into coincidence with the endwall shock. For example, FIG. 5 illustrates an embodiment where a section of the tip region is displaced circumferentially (relative to the prior art blade) so that the blade intercepts the endwall shock 64 and brings it into coincidence with the passage shock 66. As with the embodiment of FIG. 3, the displaced section extends radially inward far enough to intercept the endwall shock over its entire radial extent and brings it into coincidence with the passage shock 66. This embodiment functions as effectively as the embodiment of FIG. 3 in terms of bringing the passage shock into coincidence with the endwall shock. However it suffers from the disadvantage that the airfoil tip is curled in the direction of rotation R. In the event that the blade tip contacts the rubstrip 46 during engine operation, the curled blade tip will gouge rather than abrade the rubstrip necessitating its replacement. Other alternative embodiments may also suffer from this or other disadvantages.

The invention's beneficial effects also apply to a blade having a forward swept airfoil. Referring to FIG. 6 and 7, a forward swept airfoil 122 according to the present invention has a leading edge 128, a trailing edge 130, a root 124 and a tip 126 located at a tip radius r_{tip}. An inner transition point 140 located at an inner transition radius r_t-inner is the axially aftmost point on the leading edge. The leading edge of the airfoil is swept forward by a radially varying first sweep angle σ_1 in an intermediate region 70 of the airfoil. The intermediate region is radially bounded by the inner transition radius r_t-inner and the outer transition radius r_t-outer. The first sweep angle σ_1 is nondecreasing with increasing radius, i.e. the sweep angle increases, or at least does not decrease, with increasing radius.

The leading edge 128 of the airfoil is also swept forward by a radially varying second sweep angle σ_2 in a tip region 74 of the airfoil. The tip region is radially bounded by the outer transition radius r_t-outer and the tip radius r_{tip}. The second sweep angle is nonincreasing (decreases, or at least does not increase) with increasing radius. This is in sharp contrast to the prior art airfoil 122' whose sweep angle increases with increasing radius radially outward of the inner transition radius.

In the forward swept embodiment of the invention, as in the swept back embodiment, the nonincreasing sweep angle σ_2 in the tip region 74 causes the endwall shock 64 to be coincident with the passage shock 66 for reducing the aerodynamic losses as discussed previously. This is in contrast to the prior art blade, shown in phantom where the endwall shock and the passage shock are distinct and therefore impose multiple aerodynamic losses on the working medium.

In the swept back embodiment of FIG. 2, the inner transition point is the axially forwardmost point on the leading edge. The leading edge is swept back at radii greater than the inner transition radius. The character of the leading edge sweep inward of the inner transition radius is not embraced by the invention. In the forward swept embodiment of FIG. 6, the inner transition point is the axially aftmost point on the leading edge. The leading edge is swept forward at radii greater than the inner transition radius. As with the swept back embodiment, the character of the leading edge sweep inward of the inner transition radius is not embraced by the invention. In both the forward swept and back swept embodiments, the inner transition point is illustrated as being radially outward of the airfoil root. However the invention also comprehends a blade whose inner transition point (axially forwardmost point for the swept back embodiment and axially aftmost point for the forward swept embodiment) is radially coincident with the leading edge of the root. This is shown, for example, by the dotted leading edge 28" of FIG. 2.

The invention has been presented in the context of a fan blade for a gas turbine engine, however, the invention's applicability extends to any turbomachinery airfoil wherein flow passages between neighboring airfoils are subjected to multiple shocks.

We claim:

1. A turbomachinery blade for a turbine engine having a cascade of blades rotatable about a rotational axis so that each blade in the cascade has a leading neighbor and a trailing neighbor, and each blade cooperates with its neighbors to define flow passages for a working medium gas, the blade cascade being circumscribed by a case and under some operational conditions an endwall shock extends a limited distance radially inward from the case and also extends axially and circumferentially across the flow passages, and a passage shock also extends across the flow passages, the turbomachinery blade including an airfoil having a leading edge, a trailing edge, a root, a tip and an inner transition point located at an inner transition radius radially inward of the tip, the blade characterized in that at least a portion of the leading edge radially outward of the inner transition point is swept and a section of the airfoil radially coextensive with the endwall shock extending from the leading neighbor intercepts the endwall shock so that the endwall shock and the passage shock are coincident.

2. A turbomachinery blade for a turbine engine having a cascade of blades rotatable about a rotational axis so that each blade in the cascade has a leading neighbor and a trailing neighbor, and each blade cooperates with its neighbors to define flow passages for a working medium gas, the blade cascade being circumscribed by a case and under some operational conditions an endwall shock extends a limited distance radially inward from the case and also extends axially and circumferentially across the flow passages and a passage shock also extends across the flow passages, the turbomachinery blade including an airfoil having a leading edge, a trailing edge, a root, a tip located at a tip radius, an inner transition point located at an inner transition radius radially inward of the tip, and an outer transition point at an outer transition radius radially intermediate the inner transition radius and the tip radius, the blade having a tip region bounded by the outer transition radius and the tip radius, and an intermediate region bounded by the inner transition radius and the outer transition radius, the blade characterized in that the leading edge is swept in the intermediate region at a first sweep angle which is generally nondecreasing with increasing radius, and the leading edge is swept over at least a portion of the tip region at a second sweep angle which is generally nonincreasing with increasing radius so that the section of the airfoil radially coextensive with the endwall shock extending from the leading neighbor intercepts the endwall shock so that the endwall shock and the passage shock are coincident.

3. The turbomachinery blade of claim 1 or 2 characterized in that the inner transition radius is coincident with the root at the leading edge of the blade.

* * * * *

Express Mail Mailing Label No. EI593095157US

Attorney Docket No. 3600.100 Cont.

IN THE UNITED STATES PATENT AND TRADEMARK OFFICE

In re Reissue Application of	)	Examiner: C. Verdier
DAVID A. SPEAR ET AL.	)	Group Art Unit: 3745
Appln. No.: Not yet assigned	)	
Filed: Herewith	)	
For: SWEPT TURBOMACHINERY BLADE	)	Date: June 5, 2001

Commissioner for Patents
Washington, D.C. 20231

PRELIMINARY AMENDMENT AND
NOTICE UNDER 37 C.F.R. § 1.607(c)

Sir:

Prior to examination, please amend the above-identified application as follows:

IN THE SPECIFICATION:

Before the first line, add the following:

--CROSS-REFERENCE TO RELATED APPLICATIONS

This is a continuation of Application No. 09/343,736, filed June 30, 1999, seeking reissue of U.S. Patent No. 5,642,985, issued July 1, 1997.--

REMARKS

The specification has been amended to provide the information required by 37 C.F.R. § 1.177(a).

The present application presents new claims 4-22. Original patent claims 1-3 have been canceled. They are retained in co-pending Application No. 09/343,736 to reissue U.S. Patent No. 5,642,985.

Pursuant to 37 C.F.R. § 1.607(c), this will serve as notice that new claims 4-22 variously correspond exactly or substantially to claims 1-13 in U.S. Patent No. 6,071,077, issued June 6, 2000.

The applicants' undersigned attorney may be reached by telephone at (609) 921-8660. All correspondence should be directed to the below listed address.

Respectfully submitted,

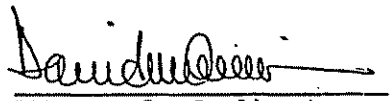

Attorney for Applicants

Registration No. 26,641

DAVID M. QUINLAN, P.C.
40 Nassau Street
Princeton, NJ 08542
Facsimile: (609) 921-8651

Express Mail Mailing Label No. EI593095157US

9/B
10/18/02
C-V.

Attorney Docket No. 3600.100 Cont.

IN THE UNITED STATES PATENT AND TRADEMARK OFFICE

In re Reissue Application of	)	Examiner: C. Verdier
DAVID A. SPEAR ET AL.	)	Group Art Unit: 3745
Appln. No.: Not yet assigned	)	
Filed: Herewith	)	
For: SWEPT TURBOMACHINERY BLADE	)	Date: June 5, 2001

Commissioner for Patents
Washington, D.C. 20231

PRELIMINARY AMENDMENT AND
NOTICE UNDER 37 C.F.R. § 1.607(c)

Sir:

Prior to examination, please amend the above-identified application as follows:

IN THE SPECIFICATION:

Before the first line, add the following:

--CROSS-REFERENCE TO RELATED APPLICATIONS

This is a continuation of Application No. 09/343,736, filed June 30, 1999, seeking reissue of U.S. Patent No. 5,642,985, issued July 1, 1997.--

B1

REMARKS

The specification has been amended to provide the information required by 37 C.F.R. § 1.177(a).

The present application presents new claims 4-22. Original patent claims 1-3 have been canceled. They are retained in co-pending Application No. 09/343,736 to reissue U.S. Patent No. 5,642,985.

Pursuant to 37 C.F.R. § 1.607(c), this will serve as notice that new claims 4-22 variously correspond exactly or substantially to claims 1-13 in U.S. Patent No. 6,071,077, issued June 6, 2000.

The applicants' undersigned attorney may be reached by telephone at (609) 921-8660. All correspondence should be directed to the below listed address.

Respectfully submitted,

Attorney for Applicants

Registration No. 26,641

DAVID M. QUINLAN, P.C.
40 Nassau Street
Princeton, NJ 08542
Facsimile: (609) 921-8651