UNITED STATES DISTRICT COURT
DISTRICT OF COLORADO

SHENZHEN KEENRAY INNOVATIONS LIMITED.,

Plaintiff/Counter-Defendant,

v.

GLOBAL PROTON LLC,

Defendant/Counter-Plaintiff.

Case No. 1:23-cv-01855-STV

JURY TRIAL DEMANDED

DEFENDANT'S MOTION FOR PRELIMINARY INJUNCTION

Defendant Global Proton LLC hereby moves this Court to preliminarily enjoin Shenzhen Keenray Innovations Limited from infringing Proton's U.S. Patent No. 8,481,895 entitled "Portable warming device and method for warming an article."

TABLE OF CONTENTS

TABLE OF AUTHORITIES ii

I. INTRODUCTION 1

II. FACTUAL BACKGROUND 1

A. Global Proton LLC 1

B. The Asserted Patent 3

C. The Infringing Device 5

D. Proton's Amazon Complaint 6

III. LEGAL STANDARD 6

IV. ARGUMENT 7

A. Proton is Likely to Succeed on the Merits 7

1. The claim language has its common and ordinary meaning 8

2. Keenray Infringes at Least One Claim of The '895 Patent 8

3. The '895 Patent Is Valid 14

B. Proton Will Suffer Irreparable Harm Absent Injunctive Relief 15

1. Proton's will be irreparably harmed if Keenray is able to offer to customers the same unique and patented features 16

2. There is a nexus between Keenray's infringement and Proton's harm. 19

C. The Balance of Equities Favors Entry of a Preliminary Injunction 19

D. The Public Interest Favors Entry of a Preliminary Injunction 21

V. CONCLUSION 21

CERTIFICATE PURSUANT TO D.C.COLO.LCivR 7.1 23

CERTIFICATE OF SERVICE 23

TABLE OF AUTHORITIES

Cases

Abbott Laboratories v. Andrx Pharmaceuticals, Inc.,
473 F.3d 1196 (Fed. Cir. 2007) 7

Abbott Labs. v. Sandoz, Inc.,
544 F.3d 1341 (Fed. Cir. 2008) 7, 20

Amhil Enters., Ltd. v. Wawa, Inc.,
81 F.3d 1554 (Fed. Cir. 1996) 9

Anderson v. TOL, Inc.,
927 F.Supp.2d 475 (M.D. Tenn. 2013)..... 20, 21

Apple, Inc. v. Samsung Elecs. Co.,
678 F.3d 1314 (Fed. Cir. 2012) 19, 21

AstraZeneca LP v. Apotex,
633 F.3d 1042 (Fed. Cir. 2010) 6

Biagro W. Sales, Inc. v. Grow More, Inc.,
423 F.3d 1296 (Fed. Cir. 2005) 8

Caught Fish Enterprises, LLC v. Action Mfg., LLC,
Case No. 1:10-cv-00656-REB, 2010 WL 2508397 (D. Colo. June 17, 2010) 6

Celsis In Vitro, Inc. v. CellzDirect, Inc.,
664 F.3d 922 (Fed. Cir. 2012) 16

Computer Sys., Inc. v. Nu-Kote Int'l, Inc.,
134 F.3d 1085 (Fed. Cir. 1998) 15

Dominion Video Satellite, Inc. v. Echostar Satellite Corp.,
356 F.3d 1256 (10th Cir. 2004) 16

Douglas Dynamics, LLC v. Buyers Prods. Co.,
717 F.3d 1336 (Fed. Cir. 2013) 16

eBay Inc. v. MercExchange, L.L.C.,
547 U.S. 388 (2006)..... 6

Eko Brands, LLC v. Adrian Rivera Maynez Enters., Inc.,
946 F.3d 1367 (Fed. Cir. 2020) 14

Enercon GmbH v. Int'l Trade Comm'n,
151 F.3d 1376 (Fed. Cir. 1998) 8

H.H. Robertson, Co. v. United Steel Deck, Inc.,
820 F.2d 384 (Fed. Cir. 1987) 7

Hybritech Inc. v. Abbott Labs.,
849 F.2d 1446, 1457 (Fed. Cir. 1988) 20

i4i Ltd. P'ship, v. Microsoft Corp.,
598 F.3d 831 (Fed. Cir. 2010) 14, 20

Markman v. Westview Instruments, Inc.,
52 F.3d 967 (Fed. Cir. 1995) 7

Microsoft Corp. v. i4i Ltd. P'ship,
131 S. Ct. 2238 (2011) 14

Monsanto Co. v. McFarling,
302 F.3d 1291 (Fed. Cir. 2002). 6

Phillips v. AWH Corp.,
415 F.3d 1303 (Fed. Cir. 2015) 8

Polymer Techs., Inc. v. Bridwell,
103 F.3d 970 (Fed. Cir. 1996) 16

Ralston Purina Co. v. Far-Mar-Co., Inc.,
772 F.2d 1570 (Fed. Cir. 1985) 15

Reebok Int'l, Ltd. v. J. Baker, Inc.,
32 F.3d 1552 (Fed. Cir. 1994) 7

Revision Military, Inc. v. Balboa Mfg. Co.,
700 F.3d 524 (Fed. Cir. 2012) 20

Robert Bosch v. Pylon Mfg. Corp.,
659 F.3d 1142 (Fed. Cir. 2011) 16, 21

Sanofi-Synthelabo v. Apotex, Inc.,
470 F.3d 1368 (Fed. Cir. 2006) 7

Smith Int'l, Inc. v. Hughes Tool Co.,
718 F.2d 1573 (Fed. Cir. 1983) 21

Southwall Techs. v. Cardinal IG Co.,
54 F.3d 1570 (Fed. Cir. 1995) 9

SRI Int'l, Inc. v. Cisco Sys., Inc.,
14 F.4th 1323 (Fed. Cir. 2021) 14

Teleflex, Inc. v. Ficosa N. Am. Corp.,
299 F.3d 1313 (Fed. Cir. 2002) 8

Titan Tire Corp. v. Case New Holland, Inc.,
566 F.3d 1372 (Fed. Cir. 2009) 15

Tuf-Tite, Inc. v. Fed. Package Networks, Inc.,
2014 U.S. Dist. LEXIS 163352 (N.D. Ill. Nov. 21, 2014) 20

Winter v. Natural Res. Def. Council, Inc.,
129 S. Ct. 365 (2009) 6

Statutes

35 U.S.C. § 271(a) 8

35 U.S.C. § 283 6

"It's important to remember that people can go off the deep end; it doesn't mean they have to stay there. And when they come back, it's nice to have a friend waiting with a warm towel." - Julie Klam

I. INTRODUCTION

Pursuant to Federal Rule of Civil Procedure 65, Defendant Global Proton LLC ("Proton") respectfully moves the Court to grant a preliminary injunction to enjoin Plaintiff Shenzhen Keenray ("Keenray") Innovations Limited from using, manufacturing, selling, offering for sale, or importing the accused products within the United States. As set forth in Proton's Answer and Counterclaim (and exhibits thereto), Keenray has committed acts of infringement by making, using, selling, and/or offering to sell the accused products to the same customers as Proton. *See* Dkt. 22 ("*Counterclaim*") at ¶¶ 7-26, Ex. C. Absent relief, Proton will suffer imminent and irreparable harm from the infringement of its valuable utility patent: U.S. Pat. No. 8,481,895 (the "'895 Patent") entitled "Portable warming device and method for warming an article." *Counterclaim*, Ex. A ("'895 Patent"). Accordingly, for the reasons set forth herein, a preliminary injunction is both justified and in the interest of justice.

II. FACTUAL BACKGROUND

A. Global Proton LLC

Proton is a producer and distributor of, among other products, towel warmers. At the moment, Proton offers two towel warmers for sale in the United States, a 35L model and a 20L model. *See* Declaration of Armin Ghiam in Support of the Motion for Preliminary Injunction ("*Ghiam Decl.*") Ex. A; *see also* Declaration of Curtis Taylor in Support of the Motion for

Preliminary Injunction ("*Taylor Decl.*"), ¶¶ 46-48. These devices include the features of claim 1 of the '895 Patent.



GLOBAL PROTON 35L Towel Warmer



TOWEL SPA 20L Towel Warmer

See Ghiam Decl., Ex. A.

The 35L model was introduced in August of 2023 and accommodates three towels, which can be treated for 30, 60, 120, or 180 minutes. *Id.*; *Taylor Decl.*, ¶ 46. The unit disinfects the towels using an ultraviolet radiation and a pasteurization technique. *Ghiam Decl.*, Ex. A. Additionally, the unit removes orders and smoothens the fabric with the placement of aromatherapy tablets or essential oils in the unit. *Id.*



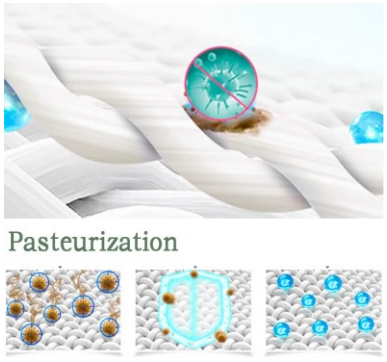



See id.

The 20L model, *i.e.*, TOWEL SPA, offers a new, flexible design and an exquisite appearance to elevate the user experience. *Id.* This product will be offered for sale over the next two months. *Taylor Decl.*, ¶ 46. It has a visual display with light strips to inform the user about the temperature of the device. *Ghiam Decl.*, Ex. A. The lid of this model can be locked and would automatically open when unlocked. *Id.* Like the 35L model, this device also has a diffuser disk for essential oils. *Id.* This product is the only non-infringing product in the market that is able to maintain consistency of temperature by using a mix of time and temperature parameters. *Taylor Decl.*, ¶¶ 50-51.





See id.

B. The Asserted Patent

The ’895 Patent relates to a portable warming device designed to dry heat a piece textile such as a towel. *See generally* the ’895 Patent. In some embodiments, the ’895 Patent provides for a heating arrangement that heats a surface of the device. *Id*. claims. The device further includes a controller to control the heating functionality of the of the heating arrangement, *e.g.*, shut off the heating arrangement after a predetermined period of time or after a predetermined temperature is

reached. *Id*. The combination of the features disclosed in the '895 Patent provide for a device that can heat the textile uniformly. *Id*.

Prior to the '895 Patent, a variety of towel warming devices were commercially developed and offered to the public. *Id*. at 2:4-16. These towel heating devices, however, has numerous flaws. *Id*. For example, many of these devices required invasive structural modifications, leading to undesired expense and cosmetic alteration of a bathroom. *Id*. In addition, many of these devices were very expensive, thus only used commercially or by a small portion of the population. *Id*. Furthermore, many of these devices were not portable, took a significant amount of time to proper heat the towel or used a lot of energy to heat the towel. *Id*. The claims of the '895 Patent are directed to a portable warming device for warming one or more towels, which address many deficiencies of the prior art. *Id*.

The '895 Patent was one of the first, if not, the first patent for electric box towel warmers in the United States. *Taylor Decl.*, ¶¶ 5-13. The design and development of the device subject of the '895 Patent was a lengthy and expensive process. *Id*. Given the new and novel approach taken by the '895 Patent, Proton's predecessor was able to license the patent for many years, recovering royalty payments in excess of half a million dollars. *Id*. These licensees included Brookstone, Sharper Image, Conair, and Homedics. *Id*. The product was one of the best sellers on Sharper Image's product line. *Id*. This alone is an indication of the novelty and utility of the '895 Patent. *Id*.

Proton is the current lawful owner of the '895 Patent. *Ghiam Decl.*, Ex. B. The '895 Patent was filed on April 25, 2006 as U.S. Pat. App. No. 11/410,764 and is continuation-in-part of U.S. Pat. App. Nos. 11/020,183 and 11/020,231, which were both filed on December 27, 2004. *See* '895

Patent. The '895 Patent, entitled "Portable warming device and method for warming an article," was duly and legally issued by the U.S. Patent and Trademark Office ("PTO") on July 9, 2013. *Id*. The named inventors of the '895 Patent are Curtis Taylor, Douglas E. Whitner, and Marc Louis Vitantonio. *Id*.

C. The Infringing Device

Keenray sells a KEENRAY towel warmer (the "infringing device") through its Amazon store. *Ghiam Decl.*, Ex. C. Keenray claims that the infringing device, just like Proton's towel warmer, has 20L capacity, which can accommodate "oversized bath towels, bathrobes, blankets, PJ's and more." *Id*. The infringing device is advertised to have multiple heating modes, including: i) "The towel heater can warm the towel for 15/30/45/60 minutes"; and ii) "The towel bucket can warm your towel into 75℃ (167℉), 80℃ (176℉) or 85℃ (185℉)." Moreover, the infringing device provides a "[r]eal time temperature check."



See id.; *see also* Ex. D (shwoing Keenray's product manual).

D. Proton's Amazon Complaint

In July 2023, Proton filed a complaint with Amazon concerning Keenray's sale of the infringing device. While Amazon notified Keenray about the complaint, Keenray's listing is still active on Amazon, and Keenray continues to sell the infringing devices.

III. LEGAL STANDARD

The Patent Act authorizes district courts to grant preliminary injunctive relief "in accordance with principles of equity to prevent the violation of any right secured by patent, on such terms as the court deems reasonable." 35 U.S.C. § 283. A preliminary injunction should be granted when: (1) the movant is likely to succeed on the merits; (2) the movant is likely to suffer irreparable injury; (3) the balance of equities tips in movant's favor; and (4) an injunction is in the public interest. *Winter v. Natural Res. Def. Council, Inc.,* 129 S. Ct. 365, 374 (2009); *AstraZeneca LP v. Apotex*, 633 F.3d 1042, 1049 (Fed. Cir. 2010) (affirming grant of preliminary injunction in patent case); *see also, eBay Inc. v. MercExchange, L.L.C.*, 547 U.S. 388, 391-92 (2006) (holding that traditional principles of equity "apply with equal force to disputes arising under the Patent Act"). Courts should balance these four factors based on their relative weights. *Monsanto Co. v. McFarling*, 302 F.3d 1291, 1297 (Fed. Cir. 2002).

However, "[t]he determination of a motion for a preliminary injunction and a decision on the merits are different and, thus, [it] is not necessary that [movant] show positively that [it] will prevail on the merits before a preliminary injunction may be granted. Rather, [movant] need[s] only establish a reasonable probability of success, . . . not an overwhelming likelihood of success[.]" *Caught Fish Enterprises, LLC v. Action Mfg., LLC*, Case No. 1:10-cv-00656-REB, 2010 WL 2508397, at *2 (D. Colo. June 17, 2010) (internal quotations and citations omitted).

IV. ARGUMENT

Proton seeks preliminary injunction to enjoin Keenray's infringing conduct, for which there is no adequate remedy at law. *See Reebok Int'l, Ltd. v. J. Baker, Inc.*, 32 F.3d 1552, 1557 (Fed. Cir. 1994). As explained below, all four factors weigh in favor of granting this relief.

A. Proton is Likely to Succeed on the Merits

Proton is likely to succeed in establishing Keenray's infringement and in rebutting any potential challenges to the validity of the claims of the '895 Patent. To demonstrate a likelihood of success on the merits, Proton must show it will likely prove infringement of at least one claim of the '895 Patent, and that at least one of those claims is likely to withstand an invalidity challenge, if made. *Sanofi-Synthelabo v. Apotex, Inc.*, 470 F.3d 1368, 1374 (Fed. Cir. 2006); *Abbott Laboratories v. Andrx Pharmaceuticals, Inc.*, 473 F.3d 1196, 1201 (Fed. Cir. 2007). "This likelihood is based on the underlying facts as found at this stage of the proceedings, recognizing that 'the burdens at the preliminary injunction stage track the burdens at trial.'" *Abbott Labs. v. Sandoz, Inc.*, 544 F.3d 1341, 1358 (Fed. Cir. 2008) (affirming preliminary injunction); *H.H. Robertson, Co. v. United Steel Deck, Inc.*, 820 F.2d 384, 390 (Fed. Cir. 1987) ("The grant of a preliminary injunction does not require that infringement be proved beyond all question, or that there be no evidence supporting the viewpoint of the accused infringer;" rather, movant only needs to show a "reasonable probability" of prevailing on its claim for patent infringement to warrant a preliminary injunction), overruled on other grounds, *Markman v. Westview Instruments, Inc*., 52 F.3d 967, 1019 (Fed. Cir. 1995).

1. The claim language has its common and ordinary meaning

"An infringement analysis proceeds first to claim construction to determine the scope and meaning of the asserted claims, and second to a comparison of the properly construed claims with the allegedly infringing product to determine whether the product embodies every limitation of the claims." *Biagro W. Sales, Inc. v. Grow More, Inc.*, 423 F.3d 1296, 1301 (Fed. Cir. 2005).

Claim construction begins with the words of the claims, which "are generally given their ordinary and customary meaning." *Phillips v. AWH Corp.*, 415 F.3d 1303, 1312-14 (Fed. Cir. 2015). Indeed, there is "a 'heavy presumption' that a claim term carries its ordinary and customary meaning." *Teleflex, Inc. v. Ficosa N. Am. Corp.*, 299 F.3d 1313, 1325 (Fed. Cir. 2002). "[T]he ordinary and customary meaning of a claim is the meaning that the term would have to a person of ordinary skill in the art in question at the time of the invention." *Phillips*, 415 F.3d at 1313.

Here, none of the asserted claims contain any language that requires special construction. The ordinary meaning of each claim term is "readily apparent," and thus claim construction in this matter "involves little more than the application of the widely accepted meaning of commonly understood words." *Id*. at 1314. As such, a claim construction hearing is not necessary to decide this motion and Keenray's infringement of the asserted claims is clear.

2. Keenray Infringes at Least One Claim of The '895 Patent

Direct infringement consists of making, using, offering to sell, or selling a patented invention in the United States, or importing a patented invention into the United States, without consent of the patent owner. 35 U.S.C. § 271(a). A patentee bears the burden of proving infringement at trial of the asserted patent claims by a "preponderance of the evidence." *See, e.g.*, *Enercon GmbH v. Int'l Trade Comm'n,* 151 F.3d 1376, 1384 (Fed. Cir. 1998). Literal infringement

of a claim occurs when every limitation recited in the claim appears in the accused device, *i.e.*, when the properly construed claim reads on the accused device exactly. *Amhil Enters., Ltd. v. Wawa, Inc.*, 81 F.3d 1554, 1562 (Fed. Cir. 1996); *Southwall Techs. v. Cardinal IG Co.*, 54 F.3d 1570, 1575 (Fed. Cir. 1995).

Keenray has and continues to make, use, sell, and/or offer to sell towel warmers that infringe at least claim 1 of the '895 Patent. The following claim chart demonstrates in detail how each and every element of claim 1 is met by the infringing device:

Claim 1	**Keenray's Infringing Device**
1. A portable textile warmer designed to dry heat warm a textile comprising:	The infringing device is a portable textile warmer, which claims to be able to warm up a towel. *See* Ex. C ("The towel heater can warm the towel for 15/30/45/60 minutes . . . . The towel bucket can warm your towel into 75℃ (167℉), 80℃ (176℉) or 85℃ (185℉).")
a housing body having a bottom portion, a top portion, an inner shell, and a lid; said inner shell having an inner surface that at least partially forms a warming cavity; said warming cavity having a base wall and a side wall;	The infringing device includes a housing body with a bottom portion, a top portion, an inner shell, and a lid. The inner shell of the infringing device has an inner surface. The inner surface qualifies as the a warming cavity. The warming cavity of the infringing device has a base wall and a side wall. *See* Ex. C. 

Claim 1	Keenray's Infringing Device
said warming cavity having a volume to hold at least one standard bath towel;	The warming cavity of the accused device can hold a bath towel. *See* Ex. C. 
said lid positionable on said top portion of said housing;	The lid of the accused device can be placed on the top portion of the housing. *See* Ex. C 
said lid movable between an open and a closed position wherein said lid in the closed position causing said one or more textiles in said warming cavity to be substantially encapsulated by said warming cavity;	The lid of the accused device can be in a closed position, *i.e.*, placed on the top portion of the housing, or can be in an open position, i.e., removed from the top of the housing. When closed, the lid can encapsulate the towel in the warming cavity. *See* Ex. C 

Claim 1	Keenray's Infringing Device
said lid in the open position enabling one or more textiles to be inserted or removed from said warming cavity;	When the lid is open, a user can insert or remove the towel. *See* Ex. C. 
a heating arrangement designed to dry heat one or more textiles positioned in said warming cavity;	The accused device has a heating arrangement to heat the towel. *See Counterclaim*, Ex. 3. 

Claim 1	Keenray's Infringing Device
said heating arrangement including a resistive heating element, a heating controller, a current connector, and an activation switch;	The accused device includes a resistive heating element, a heating controller, a current connector, and an activation switch. *See* Ex. D; *Counterclaim*, Ex. 3.  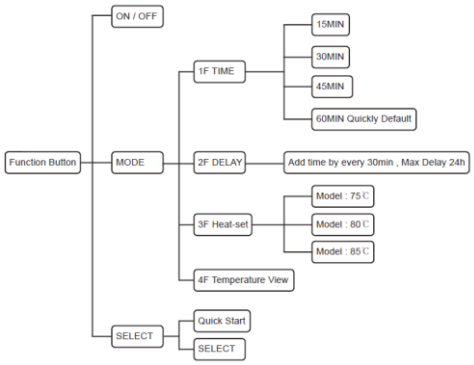
said resistive heating element positioned on an outer surface of said inner shell and about said side wall of said warming cavity, in close proximity to said outer surface of said inner shell and about said side wall of said warming cavity, or combinations thereof;	The resistive heating element is positioned on an outer surface of the inner shell on the side wall of the warming cavity. The heating element is attached to the outer surface of the inner shell. *See Counterclaim*, Ex. 3. 

Claim 1	Keenray's Infringing Device
said resistive heating element designed to heat said inner surface of said inner shell;	The resistive heating element heats the inner surface of the inner shell. *See* Ex. C. 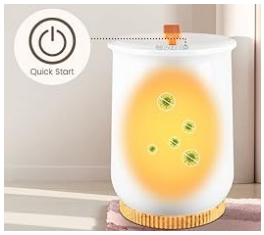
said current connector designed to connect to a current source to provide current to said resistive heating element;	The current connector connects to a current source to provide current to said resistive heating element. *See* Ex. D. 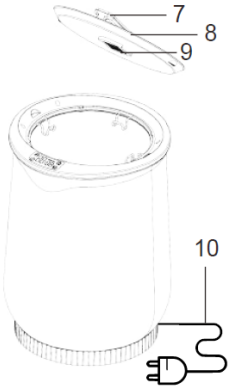
said heating controller terminating a flow of current to said resistive heating element once a predetermined period of time has passed since said activation switch has been actuated by a user, after a temperature sensor senses a predetermined temperature after a user has actuated said activation switch, or combinations thereof.	The heating controller of the accused device terminates the flow of current to the resistive heating after a pre-determined period of time and after a certain temperature has reached. *See* Ex. C. 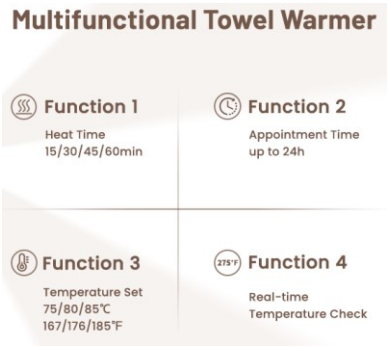

See Ghiam Decl., Exs. C and D.

Keenray's literal infringement is clear from even a simple visual inspection. Expert testimony is not necessary to establish infringement at the preliminary injunction stage.

Moreover, Keenray's infringement is willful. Keenray has had notice of the '895 Patent since as early as July 9, 2023, when it admits to have received a notification from Amazon. *See* Dkt. 1 at ¶¶ 23-26. Moreover, Keenray is the assignee of U.S. Patent Nos. D954,236, D952,810, and 11,602,015. All three patents reference the '895 Patent as one of the few the prior art publications that the examiner considered during the prosecution of each patent. *Ghiam Decl.*, Ex. E. As such, Plaintiff knew about the '895 Patent as early as November 10, 2020—the first issue date of the patents—if not earlier. Therefore, Keenray's conduct has the tell-tale signs of intentional wanton patent infringement. *SRI Int'l, Inc. v. Cisco Sys., Inc.*, 14 F.4th 1323, 1330 (Fed. Cir. 2021) ("As we said in Eko Brands, [u]nder Halo, the concept of willfulness requires a jury to find no more than deliberate or intentional infringement." (internal quotations omitted) (quoting *Eko Brands, LLC v. Adrian Rivera Maynez Enters., Inc.*, 946 F.3d 1367, 1378 (Fed. Cir. 2020)). Indeed, given Keenray's knowledge of the '895 Patent and the precise accusation of infringement prior to filing this lawsuit, there is little question that Keenray's infringement of the patent is likely to be found willful and deliberate.

3. The '895 Patent Is Valid

Keenray is unlikely to be able to prove by "clear and convincing evidence" that the '895 Patent is invalid or unenforceable. *See Microsoft Corp. v. i4i Ltd. P'ship*, 131 S. Ct. 2238, 2242 (2011). A patent is presumed valid, and "the burden of persuasion to the contrary is and remains on the party asserting invalidity." *Ralston Purina Co. v. Far-Mar-Co., Inc.*, 772 F.2d 1570, 1573

(Fed. Cir. 1985); *Titan Tire Corp. v. Case New Holland, Inc.*, 566 F.3d 1372, 1377 (Fed. Cir. 2009). Indeed, a "patent enjoys the same presumption of validity during preliminary injunction proceedings as at other stages of litigation." *Titan Tire Corp. v. Case New Holland, Inc.*, 566 F.3d 1372, 1377 (Fed. Cir. 2009). This presumption may be rebutted only by "clear and convincing evidence" of invalidity. *Microsoft Corp.*, 131 S. Ct. at 2242. Absent a persuasive showing of invalidity by Keenray, the statutory presumption alone establishes a likelihood of success on the issue of validity. *See Canon Computer Sys., Inc. v. Nu-Kote Int'1, Inc.*, 134 F.3d 1085, 1088 (Fed. Cir. 1998).

The '895 Patent lists well over sixty prior art references. *See* '895 Patent. These references were before the Patent Office Examiner during prosecution of Proton's patent application, and the Examiner concluded after seven years of scrutiny that the inventions claimed in the '895 patent were patentable over that art. It is highly unlikely that Keenray will identify prior art references that are more relevant than those already considered and rejected by the USPTO. Moreover, Keenray's argument in the Complaint that the '895 Patent was intentionally abandoned (for late payment of the maintenance fee) lacks evidentiary support. *Taylor Decl.*, ¶¶ 14-18. The assignee of the '895 Patent already declared the delay was unintentional. *Ghiam Decl.*, Ex. F.

Accordingly, Keenray will not likely be able to demonstrate that the '895 Patent is invalid or unenforceable.

B. Proton Will Suffer Irreparable Harm Absent Injunctive Relief

If Keenray is permitted to market its infringing device, Proton will suffer irreparable harm in the form of: the loss of a unique product; harm to Proton's patent rights; price erosion; reduced market share; inability to collect judgment against infringers; and loss of future profits. These types

of irreparable harm justify preliminary injunctive relief. *See, e.g.*, *Dominion Video Satellite, Inc. v. Echostar Satellite Corp.*, 356 F.3d 1256, 1264 (10th Cir. 2004) ("irreparable harm findings are based on such factors as the difficulty in calculating damages, the loss of a unique product, and existence of intangible harms such as loss of goodwill or competitive market position"); *Celsis In Vitro, Inc. v. CellzDirect, Inc.*, 664 F.3d 922, 930 (Fed. Cir. 2012) (affirming grant of preliminary injunction and holding: "Price erosion, loss of goodwill, damage to reputation, and loss of business opportunities are all valid grounds for finding irreparable harm").

1. Proton's will be irreparably harmed if Keenray is able to offer to customers the same unique and patented features

Proton and Keenray are direct competitors—they both sell towel warmers online—and in fact, Keenray holds the dominant position in the market. As the Federal Circuit has often noted, "[w]here two companies are in competition against one another, the patentee suffers the harm – often irreparable – of being forced to compete against products that incorporate and infringe its own patented inventions." *Douglas Dynamics, LLC v. Buyers Prods. Co.*, 717 F.3d 1336, 1345 (Fed. Cir. 2013); *Robert Bosch v. Pylon Mfg. Corp.*, 659 F.3d 1142, 1151 (Fed. Cir. 2011) (clear error of judgment to fail to find irreparable harm when the parties are direct competitors and there is loss of market share); *Polymer Techs., Inc. v. Bridwell*, 103 F.3d 970, 975-76 (Fed. Cir. 1996) (after infringement has begun, "it may be impossible to restore a patentee's . . . exclusive position by an award of damages and a permanent injunction").

Moreover, the towel warmer market presents a competitive structure, which is uniquely harmful to Proton. *Taylor Decl.*, ¶ 24. In particular, because these towel warmers are offered in online marketplaces such as Amazon, there is practically no cost or barrier for competitors to enter the market. *Id.*, ¶ 25. Prior to Keenray's infringing activity, there were very few participants in the

towel warmer market. *Id.*, ¶ 26. However, since Keenray has started distributing the infringing devices, multiple third-parties have joined the market. *Id.*, ¶ 28. Almost all of these participants, including Keenray, are based in foreign countries with minimal assets in the U.S., which means that they are practically judgment proof. *Id.*, ¶ 29. Keenray's continued and blatant infringement will encourage further infringement and entry by foreign entities. *Id.*, ¶ 30. Afterall, opening a new account is all that is needed to for an infringers to enter the market. *Id.*, ¶ 31.

Proton has already filed complaints against these third-parties on Amazon, but none of these third-parties have been removed from the market. *Id.*, ¶ 32. Keenray's ongoing infringement activity coupled with the fact there is no deterrent for the would-be infringers to join the market vitiates the value of Proton's patent such that Proton cannot enjoy exclusivity for its patented technology. *Id.*, ¶ 33. If an injunction is issued, however, online marketplaces such as Amazon will immediately remove the infringing products in response to filing a complaint (on Amazon), and Proton would be able to effectively combat the ongoing infringement activity, *i.e.*, no district court litigation would be required for each infringing product. *Id.*, ¶ 34.

On the other hand, if Keenray is not enjoyed, this flux of would-be infringers will continue into the market during the pendency of this case, which could last two years or longer. *Id.*, ¶ 36. The '895 Patent will expire in 2029. This will leave Proton with only 4 years to reap the benefits of its patent, which reduces Proton's ability to monetize the remaining life of the patent. And if towel warmers fall out of fashion in the meantime, Proton will never recover its lost sales or market share. *Id.*, ¶¶ 38-39. During this period, due to the fierce competition between infringers, there will be inevitable price erosion. *Id.*, ¶ 40. A permanent price erosion will take away Proton's ability to recover its lost profits. *Id.*, ¶ 41. Moreover, even if Proton prevails in the case against each one of

the infringers including Keenray, there are no assets to be recovered in the United Stated. *Id.*, ¶ 42. Proton will never be able to actually recover its damages, market exclusivity, and attorneys' fees. *Id.*, ¶ 43. In other words, Proton will have to continuously play a game of whac-a-mole against nameless and assetless defendants—all based in foreign countries. *Id.*, ¶ 44. This will permanently damage the investment by Proton in its product and manufacturing facility. *Id.*, ¶ 45.

Furthermore, Proton's TOWEL SPA is a unique product in the U.S. market because, among others, it is the ***only*** towel warmer to offer consistent heating by using a combination of time and temperature parameters. *Id.*, ¶ 48.

Proton differentiates its product from other towel warmers by touting the benefits of the consistent heating of the fabrics using a combination time and temperature. *Id.*, ¶ 49. These features, among others, combine to offer customers a unique towel warmer. *Id.*, ¶ 50. While there are other types of towel warmers, none has this combination of features, among others, in a non-infringing product, which provide unmatched benefits. *Id.*, ¶ 51. Many potential customers are interested in these unique features and benefits, and Proton enjoys considerable customer opportunities as a result. *Id.*, ¶ 52. Proton will lose its uniqueness and its association with these features if there are other infringing products that offer the same features. *Id.*, ¶ 53. Permitting Keenray to sell infringing devices in the U.S. will undermine and incalculably reduce these intangible benefits. *Id.*, ¶ 54.

These unique features also give Proton a price advantage in the market, to either offer more features for a given price, or receive a higher price for the additional features. *Id.*, ¶ 55. These competitive benefits and market advantages disappear or are significantly reduced if Keenray is allowed to continue to offer the same features. *Id.*, ¶ 56. Customer opportunities will decline

because customers can obtain these patented features elsewhere. *Id.*, ¶ 57. And, of course, Proton will lose sales to those customers, and its market share will drop (or will never pick up to begin with), if Keenray can also offer these patented features. *Id.*, ¶ 58. Allowing Keenray to infringe and offer the same patented technology and benefits to potential customers will force Proton to lower its price to compete. *Id.*, ¶ 59. This will further contribute to the price erosion from this unfair competition. *Id.*, ¶ 60. Given that the '895 Patent has a limited life, Proton may never recover its lost profits. *Id.*, ¶ 61.

2. There is a nexus between Keenray's infringement and Proton's harm.

There is a causal nexus between the infringement and the irreparable harm discussed above. *Apple, Inc. v. Samsung Elecs. Co.*, 678 F.3d 1314, 1323 (Fed. Cir. 2012) (a nexus is required between the infringing conduct and the alleged harm at the preliminary injunction stage). As established in the above claim chart, the infringing device embodies the inventions of the '895 Patent, including the feature of consistent heating using a combination of heat and temperature. These features are both incorporated in the TOWEL SPA device. *Taylor Decl.*, ¶¶ 48-49. Some customers purchase the Proton TOWEL SPA because of these patented features and, because of its infringement of the Proton patent, the KEENRAY towel warmer is essentially a knock-off of the Proton TOWEL SPA. *Id*. at ¶ X. Because the patented features are in both competing products and drive at least some purchasing decisions, there is a causal nexus between Keenray's infringement and the irreparable harm to Proton.

C. The Balance of Equities Favors Entry of a Preliminary Injunction

In balancing the parties' harms, "a district court 'must balance the harm that will occur to the moving party from the denial of the preliminary injunction with the harm that the nonmoving

party will incur if the injunction is granted.'" *Anderson v. TOL, Inc.*, 927 F.Supp.2d 475, 488 (M.D. Tenn. 2013) (quoting *Hybritech Inc. v. Abbott Labs.*, 849 F.2d 1446, 1457 (Fed. Cir. 1988)). The factor heavily favors a preliminary injunction.

First, as demonstrated, the likelihood of success on Proton's infringement case is very high. This is an "equitable factor" that favors Proton "in the ultimate balance of the equities." *Id*. (quoting *Revision Military, Inc. v. Balboa Mfg. Co.*, 700 F.3d 524, 526 (Fed. Cir. 2012)). Second, Proton has shown it has much to lose if preliminary injunctive relief is not granted due to the head-to-head competition with their own technology embodied in Keenray's towel warmers. Third, any harm Keenray may claim from entry of an injunction would be self-inflicted by the calculated risk they undertook in entering the marketplace with a copycat concept with full knowledge of the '895 patent. This "natural consequence of infringing activity … does not weigh against issuance of an injunction." *Anderson*, 927 F.Supp.2d at 488; *see also Celsis*, 664 F.3d at 931 (injunction warranted where potential harm to infringing party was "the result of its own calculated risk in selling a product with knowledge of [the plaintiff's] patent"); *i4i Ltd. P'ship, v. Microsoft Corp.*, 598 F.3d 831, 863 (Fed. Cir. 2010) ("[N]either commercial success, nor sunk development costs, shield an infringer from injunctive relief . . . . [The infringer] is not entitled to continue infringing simply because it successfully exploited its infringement."). Moreover, the Keenray towel warmers became available in May of this year (*Ghiam Decl.*, Ex. G (first review was left in May 2023)), so any harm to Keenray would be minimal. *See Tuf-Tite, Inc. v. Fed. Package Networks, Inc.*, 2014 U.S. Dist. LEXIS 163352, at *26 (N.D. Ill. Nov. 21, 2014) (balance of harms favor patentee where infringer "has only recently entered the market" with infringing product).

D. The Public Interest Favors Entry of a Preliminary Injunction

The Federal Circuit has indicated that courts should be more likely to grant an injunction "in traditional cases, such as this, where the patentee and adjudged infringer both practice the patented technology." *Robert Bosch*, 659 F.3d at 1150. Further, the Patent Act "reflects a strong public policy interest in 'promot[ing] the progress of the useful arts.'" *Anderson*, 927 F.Supp.2d at 489 (quoting *Smith Int'l, Inc. v. Hughes Tool Co.*, 718 F.2d 1573, 1577 (Fed. Cir. 1983)). Thus, although "the public often benefits from healthy competition . . . the public generally does not benefit when that competition comes at the expense of a patentee's investment-backed property right." *Apple*, 809 F.3d at 647. This factor favors entry of a preliminary injunction.

V. CONCLUSION

For the foregoing reasons, Proton respectfully requests that this Court grant this motion and enter a preliminary injunction against Keenray that (a) prohibits Keenray from any further direct or indirect infringement of the '895 Patent and specifically from making, using, offering to sell, selling, or importing the KEENRAY towel warmers and any other product that infringes the '895 Patent, and (b) orders Keenray to give written notice and a copy of the injunction to its distribution and retail partners that sell the KEENRAY towel warmers.

Dated: October 9, 2023

Respectfully Submitted,

/s/ *Armin Ghiam*

Armin Ghiam
Jeremy S. Boczko
Gary Abelev
Jeremy C. King

HUNTON ANDREWS KURTH LLP
200 Park Avenue
New York, NY 10166
Tel.: (212) 309-1000
Fax: (212) 309-1100
Email: AGhiam@HuntonAK.com
JBoczko@HuntonAK.com
GaryAbelev@HuntonAK.com
JKing@HuntonAK.com

Counsel for Defendant/Counter-Plaintiff Global Proton LLC

CERTIFICATE PURSUANT TO D.C.COLO.LCivR 7.1

On October 4, 2023, Proton's counsel communicated with Keenray's counsel concerning the relief requested in this motion. Keenray's counsel indicated his clint intends to oppose such relief.

CERTIFICATE OF SERVICE

I hereby certify that, on October 9, 2023, I filed a true and correct copy of the foregoing document via the Court's electronic-filing system, which will send electronic notification of such filing to all counsel-of-record in this action.

/s/ *Armin Ghiam*
Armin Ghiam
Hunton Andrews Kurth LLP