Exhibit C

Claim Chart for U.S. Patent 9,237,935 and ViVitro ADC Heart Valve Durability Tester

Claim Limitation for '935 Patent	Presence of Limitation in ADC Heart Valve Durability Tester System
1. A device for accelerated cyclic testing of a valved prosthetic device comprising	The ADC Heart Valve Durability Tester product is advertised by ViVitro as a "Heart Valve Durability Tester." Ex. B at 1. A prosthetic heart valve is a valved prosthetic device. The ADC Heart Valve Durability Tester product is also touted by ViVitro as a device for "*[a]ccelerated* wear testing for replacement heart valves." Ex. D (Sept. 16, 2022 ViVitro website) (emphasis added). One touted "feature" is that its "[a]utomatic control system maintains optimum valve loading conditions *during accelerated wear or real time testing*." Ex. B at 2 (emphasis added). The ViVitro website states that the ADC Heart Valve Durability Tester "meets ISO 5840 AWT, DFM test requirements for all valve types and designs…." Ex. D at 2; Ex. B at 2. This standard requires cyclic testing. Therefore, the ADC Heart Valve Durability Tester is a system for "accelerated cyclic testing of a valved prosthetic device."

Claim Limitation for '935 Patent	**Presence of Limitation in ADC Heart Valve Durability Tester System**
a pressure source configured to drive a test system fluid cyclically within the device above a normal physiological rate, at an accelerated pulsed rate of greater than 200 beats per minute within the device; and	Feature A (Ex. B at 3): 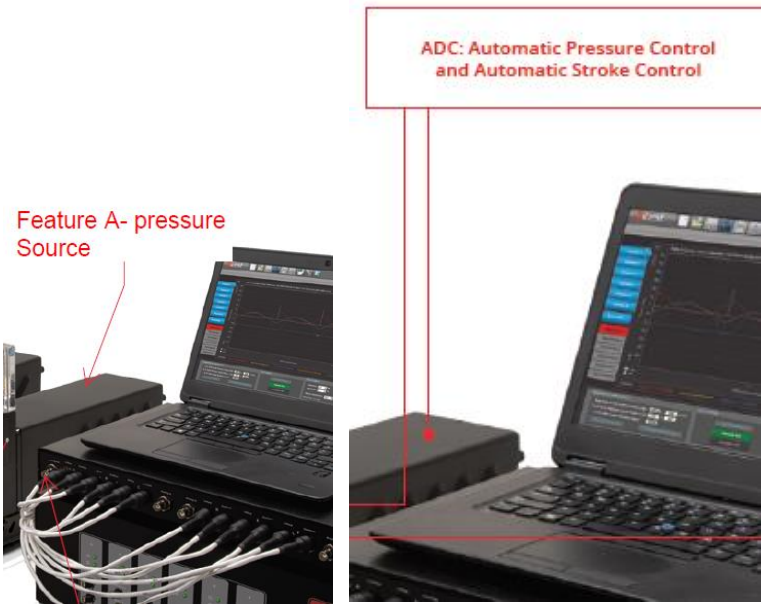 The ADC Heart Valve Durability Tester includes a pressure source (contained in the base in the above image). The device operates at a frequency of 1-70 Hz. Ex. B at 4. Hertz (Hz) is a unit of measurement for cycles per second in which 1 Hz corresponds to a rate of 60 beats per minute. Per ISO 5840, accelerated testing is performed at speeds higher than 200 beats per minute (3.33 Hz). Therefore, the ADC Heart Valve Durability Tester is configured to drive a test system fluid at an accelerated pulsed rate.
a pressurizable test chamber for containing the test system fluid and further comprising	 Feature B (Ex. B at 3): This picture shows a pressurizable test chamber. The pressurizable test chamber is also clearly noted by the location of the test sample and the inflow and outflow pressure measurement locations shown in Ex. B at 3. The ADC Heart Valve Durability Tester has "[l]arge, customizable chamber[s]" and "[i]nflow and outflow chamber annular compliance rings optimize differential pressure waveforms." Ex. B at 2.

Claim Limitation for '935 Patent	Presence of Limitation in ADC Heart Valve Durability Tester System
a fluid distribution chamber positioned on a first side of the valved prosthetic device and in fluid communication with the pressure source	  Feature C (*see* Ex. B at 3): This picture shows a fluid distribution chamber positioned underneath (in-flow side) the prosthetic valve being tested. The pressure source (Feature A) is in fluid communication with the fluid distribution chamber at the point indicated by the note above, referencing a leakage sensor. *See* Ex. B.
a fluid return chamber positioned on a second side of the valved prosthetic device;	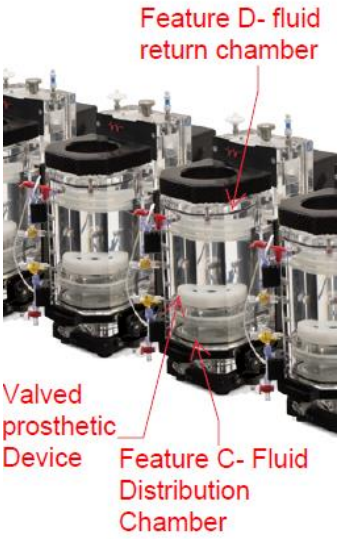 Feature D (Ex. B at 3): On the other side of the prosthetic heart valve (out-flow side - the side opposite the fluid distribution chamber), is a fluid return chamber, shown with the red arrow.

Claim Limitation for '935 Patent	**Presence of Limitation in ADC Heart Valve Durability Tester System**	
a fluid return conduit both structurally and fluidly connecting the fluid distribution chamber to the fluid return chamber; and		Feature E (Ex. B at 3): The conduits "both structurally and fluidly" connect the fluid distribution chamber and the fluid return chamber.
an excess volume area capable of operating at the accelerated pulsed rate, wherein the excess volume area is in fluid communication with the fluid return chamber providing a volume for storing a volume of a test system fluid when the test system fluid is under compression.		Feature F (Ex. B at 3): The excess volume area is shown by a red arrow, *i.e.*, the volume adjacent to the annular compliance ring. As discussed above, the device operates at an accelerated rate. Therefore, the excess volume area is "capable of operating at the accelerated pulsed rate." Moreover, when the test fluid in this closed system is under compression, it moves from the fluid return chamber to the excess volume area. The two are "in fluid communication," and a portion of this fluid is stored in the excess volume area.
2. The device in claim 1 further comprising a drive motor; and		Feature A (Ex. B at 3). The sales brochure states that the "dedicated linear electromagnetic motor utilizes position feedback for consistent heart valve opening." Ex. B at 1. Thus, the ADC Heart Valve Durability Tester is driving fluid with linear drive motor.

Claim Limitation for '935 Patent	**Presence of Limitation in ADC Heart Valve Durability Tester System**
a fluid displacement member connected with and driven by the drive motor to provide the pressure source that increases and decreases a pressure on the test system fluid in the test chamber.	Feature H (Ex. B at 3):   The ADC Heart Valve Durability Tester indicates that this feature has a "[f]luid sensor for bellows leakage detection" and "ADC: Automatic Pressure Control and Automatic Stroke Control." Ex. B at 3. A person of ordinary skill in the art would understand that this discloses fluid displacement using a bellows system to convert the linear drive motor movements into fluid pressures. The pressure control system would use a pressure source that increases and decreases of pressure that is transmitted to the test chamber (Feature B).

Claim Limitation for '935 Patent	Presence of Limitation in ADC Heart Valve Durability Tester System
3. The device of claim 2, wherein the drive motor is configured to operate cyclically, acyclically, or a combination of both, to provide cyclic and acyclic fluid pressures within the test chamber.	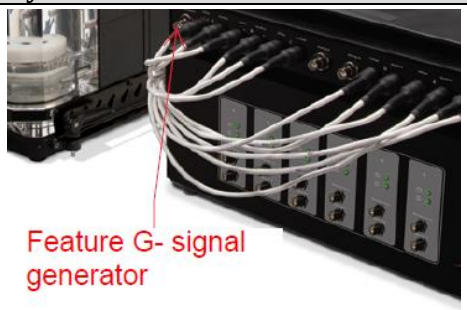  Feature G (Ex. B at 3): The linear electromagnetic motor drive system of the ADC tester is driven by the signal generator (Feature G). Typically the linear motor would be driven by a programmed cyclical waveform. However, the system has the option for driving the signal by an "External Waveform In." Ex. B at 3. This indicates that the waveform could not just be cyclical, but acyclical or a combination of both.
4. The device of claim 2, wherein the drive motor comprises a linear motor.	 Feature A (Ex. B at 3). The sales brochure states that the "dedicated linear electromagnetic motor utilizes position feedback for consistent heart valve opening." Ex. B at 1. Thus, the ADC Heart Valve Durability Tester is driving fluid with linear drive motor.

Claim Limitation for '935 Patent	**Presence of Limitation in ADC Heart Valve Durability Tester System**
8. The device of claim 1, wherein the excess volume area further contains a volume of a compressible gas that is compressed by the volume of the test system fluid to provide a spring force when the volume of the test system fluid is stored in the excess volume area.	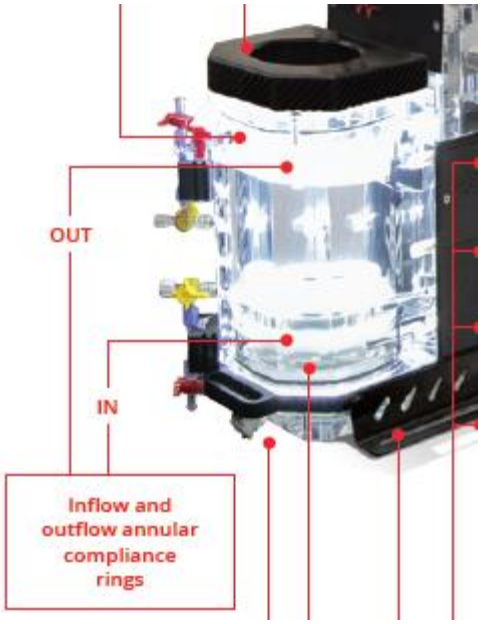 The ADC Heart Valve Durability Tester has "[l]arge, customizable [test] chamber[s]" and "[i]nflow and outflow chamber annular compliance rings optimize differential pressure waveforms." Ex. B at 2. The annular compliance rings optimize differential pressure by allowing gas adjacent to the membrane compress when under pressure. *See* Ex. B at 3. That compressed gas provides a spring force against the fluid that moves into the excess volume formerly occupied by the compressible gas.
9. The device of claim 1, wherein the excess volume area comprises a compliance chamber defining a cavity within the fluid return chamber.	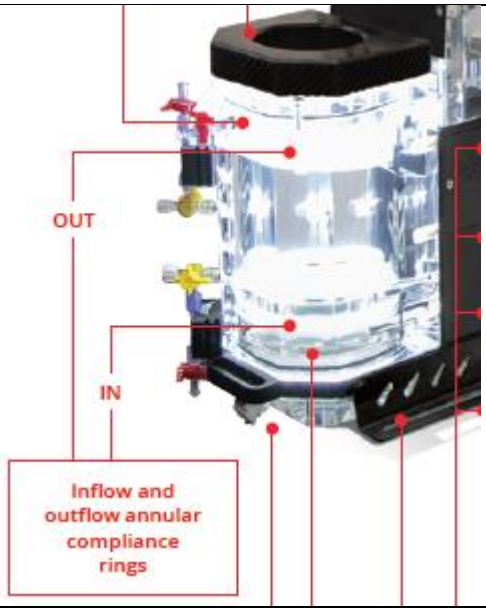 The ADC Heart Valve Durability Tester has "[l]arge, customizable [test] chamber[s]" and "[i]nflow and outflow chamber annular compliance rings optimize differential pressure waveforms." Ex. B at 2. The compressible cavity defines the compliance chamber. The annular compliance ring on the "outflow" side of the valve is adjacent to the fluid return chamber. *See* Ex. B at 3.

Claim Limitation for '935 Patent	**Presence of Limitation in ADC Heart Valve Durability Tester System**
12. The device of claim 9, wherein the compliance chamber provides a volume for holding a gas or elastomeric material that compresses under a pressure placed upon the test system fluid in the test chamber and allows the test system fluid in the test chamber to occupy a portion of the volume in the compliance chamber.	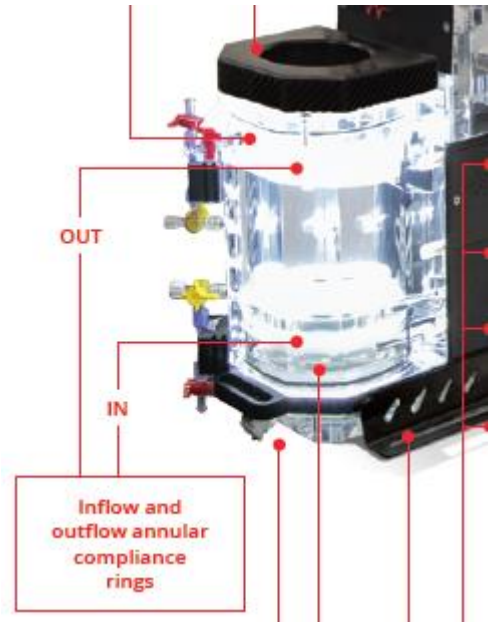 The ADC Heart Valve Durability Tester has "[l]arge, customizable [test] chamber[s]" and "[i]nflow and outflow chamber annular compliance rings optimize differential pressure waveforms." Ex. B at 2. The annular compliance rings provide compliance by holding a compressible gas adjacent to a membrane that separates the gas from the fluid. The compliance ring on the "outflow" side of the valve defines an interface with the compliance chamber within the fluid return chamber. *See* Ex. B at 3. When under pressure, the gas compresses, allowing the test fluid to occupy a portion of the volume of that compliance chamber.
13. The device of claim 1, wherein the test chamber defines a first port on a first side of the valved prosthetic device and a second port on a second side of the valved prosthetic device: and	Feature C shows a pressurizable test chamber. Ex. B at 3. The sales brochure further discloses "[s]ingle inflow, and 3 different heights of outflow pressure measurements," Ex. B at 2, which are ports for attaching pressure measurement equipment located on the inflow side of the valve (first side) and the outflow side (second side) of the valve. Ex. B at 3. 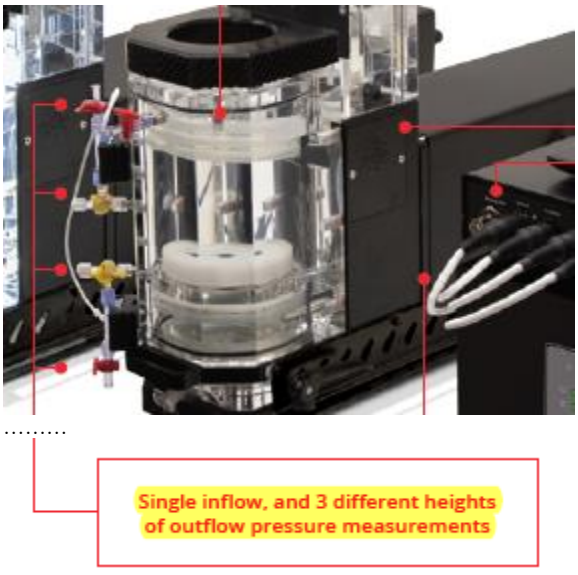

Claim Limitation for '935 Patent	Presence of Limitation in ADC Heart Valve Durability Tester System
the first port and the second port are configured to receive one or more sensor devices.	Feature C shows a pressurizable test chamber. Ex. B at 3. The sales brochure further depicts inflow and outflow ports that are 3-way luer lock fittings that are typically are used to attach pressure sensor transducers for the "pressure measurements" as stated. Ex. B at 2. 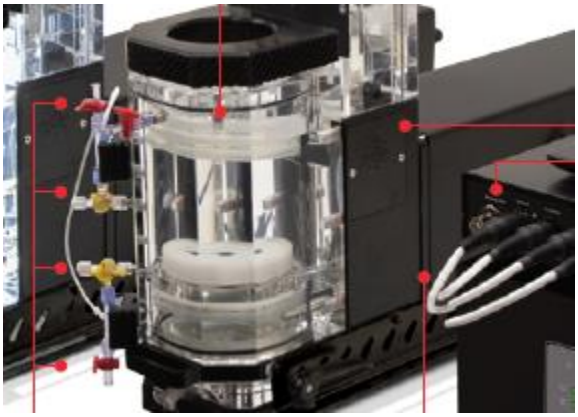 ..... 