EXHIBIT B

US011001413B2

(12) **United States Patent**
Smith et al.

(10) **Patent No.: US 11,001,413 B2**
(45) **Date of Patent: *May 11, 2021**

(54) **CONTAINER FOR PROVIDING AROMATIC SAMPLING AND VISUALIZATION OF CONTENTS**

(71) Applicants: **William Thomas Smith**, Fair Oaks, CA (US); **Cheryl Ann Smith**, Fair Oaks, CA (US)

(72) Inventors: **William Thomas Smith**, Fair Oaks, CA (US); **Cheryl Ann Smith**, Fair Oaks, CA (US)

(73) Assignee: **ALL PLASTIC, INC.**, Rancho Cordova, CA (US)

(*) Notice: Subject to any disclaimer, the term of this patent is extended or adjusted under 35 U.S.C. 154(b) by 0 days.

This patent is subject to a terminal disclaimer.

(21) Appl. No.: **16/502,168**

(22) Filed: **Jul. 3, 2019**

(65) **Prior Publication Data**

US 2020/0071029 A1 Mar. 5, 2020

Related U.S. Application Data

(63) Continuation of application No. 15/464,823, filed on Mar. 21, 2017, now Pat. No. 10,384,834, which is a (Continued)

(51) **Int. Cl.**
B65D 25/10 (2006.01)
B65D 25/54 (2006.01)
(Continued)

(52) **U.S. Cl.**
CPC ***B65D 25/106*** (2013.01); ***A47F 3/145*** (2013.01); ***A47F 7/0071*** (2013.01);
(Continued)

(58) **Field of Classification Search**
CPC A45D 34/02; A47F 7/286; A47F 7/0071; A47F 7/0078; B65D 2201/00;
(Continued)

(56) **References Cited**

U.S. PATENT DOCUMENTS

386,604 A * 7/1888 Place A47J 47/005 269/15
D128,936 S 8/1941 Foley
(Continued)

FOREIGN PATENT DOCUMENTS

EP 0990408 9/2003
EP 1779885 5/2007
KR 101215203 12/2012

OTHER PUBLICATIONS

Pictures of Bud Bar Displays™ booth at the KushCon Convention, which features the Epods. Denver, Colorado, Dec. 1, 2010. 3 pages.
(Continued)

Primary Examiner — James N Smalley
Assistant Examiner — Jennifer Castriotta
(74) *Attorney, Agent, or Firm* — Ballard Spahr LLP

(57) **ABSTRACT**

A display container for a botanical sample includes (a) an enclosure having an interior chamber for storing the botanical sample; (b) a plurality of scent ports extending through a wall of the enclosure between the interior chamber and environment; (c) a plug mounted to the enclosure and sealing the scent ports, the plug movable away from the enclosure to expose the scent ports for facilitating sampling of an aroma of the botanical sample when in the enclosure; and (d) an elongate mounting projection in the chamber for retaining the botanical sample thereon.

30 Claims, 18 Drawing Sheets

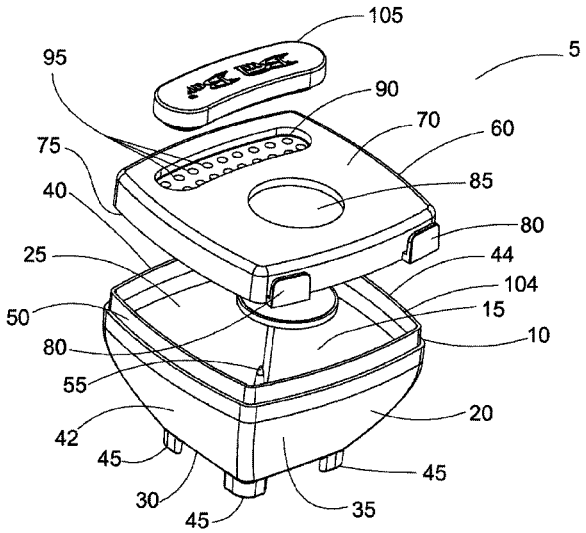

Related U.S. Application Data

continuation-in-part of application No. 14/701,961, filed on May 1, 2015, now Pat. No. 9,630,747.

(51) **Int. Cl.**

A47F 3/14	(2006.01)
A47F 7/28	(2006.01)
B65D 25/22	(2006.01)
B65D 51/24	(2006.01)
B65D 51/16	(2006.01)
B65D 23/14	(2006.01)
B65D 85/50	(2006.01)
A47F 7/00	(2006.01)

(52) **U.S. Cl.**

CPC ***A47F 7/0078*** (2013.01); ***A47F 7/286*** (2013.01); ***B65D 23/14*** (2013.01); ***B65D 25/22*** (2013.01); ***B65D 25/54*** (2013.01); ***B65D 51/1672*** (2013.01); ***B65D 51/1683*** (2013.01); ***B65D 51/24*** (2013.01); ***B65D 51/245*** (2013.01); ***B65D 85/50*** (2013.01); *B65D 2201/00* (2013.01); *B65D 2203/02* (2013.01); *B65D 2203/12* (2013.01); *B65D 2501/24872* (2013.01)

(58) **Field of Classification Search**

CPC B65D 47/32; B65D 25/54; B65D 47/121; B65D 85/52; B65D 85/50; B65D 85/505; B65D 85/70; B65D 25/106; B65D 51/245; B65D 51/1672; B65D 51/1683; B65D 2501/24872; B65D 23/14; B65D 25/205; B65D 2203/02; Y10S 261/88; Y10S 428/905; A01G 5/06; A47G 7/03

USPC 206/403, 733, 734; 220/367.1, 377, 360, 220/361, 371, 372; 40/312, 649

See application file for complete search history.

(56) **References Cited**

U.S. PATENT DOCUMENTS

2,724,213	A *	11/1955	Weil	A47G 7/03 47/41.13
2,807,901	A	10/1957	Gilowitz	
3,247,995	A	4/1966	Jensen	
3,451,328	A *	6/1969	Swett	A47J 47/10 206/493
3,656,840	A	4/1972	Smith et al.	
4,106,660	A	8/1978	Boyle	
D255,546	S	6/1980	Zaidmann et al.	
4,230,231	A	10/1980	Burnett et al.	
4,284,200	A	8/1981	Bush et al.	
D272,595	S	2/1984	Chase et al.	
D292,887	S	11/1987	Schouten	
D303,428	S	9/1989	Wada et al.	
4,979,332	A	12/1990	Nagaya et al.	
D322,323	S	12/1991	Moir	
D340,187	S	10/1993	Forsyth	
5,321,908	A	6/1994	Ushimaru	
5,363,801	A	11/1994	Walters et al.	
5,850,913	A *	12/1998	Fantone	G02B 27/025 206/308.1
5,927,007	A	7/1999	Oda et al.	
6,013,524	A	1/2000	Friars et al.	
D455,552	S	4/2002	Charness	
6,571,972	B1	6/2003	Bouc et al.	
D476,572	S	7/2003	Merritt	
D480,307	S	10/2003	Puigbo	
6,672,457	B2 *	1/2004	Aylesworth	B65D 51/24 206/277
6,761,287	B2	7/2004	Caruso	
D493,721	S	8/2004	Puigbo	
D493,722	S	8/2004	Cooper	
D513,979	S	1/2006	Snedden et al.	
D517,405	S	3/2006	Snedden et al.	
D518,728	S	4/2006	Frantz	
D523,752	S	6/2006	Bried et al.	
7,185,827	B2	3/2007	Quintard et al.	
D547,177	S	7/2007	Sherman et al.	
D588,450	S	3/2009	Snedden et al.	
D590,706	S	4/2009	Doliwa et al.	
D591,148	S	4/2009	Parikh et al.	
D600,111	S	9/2009	Gerulski et al.	
D607,340	S	1/2010	Klis	
D621,603	S	8/2010	Traylor	
7,743,934	B2	9/2010	Martin	
D630,949	S	1/2011	Lim	
D646,969	S	10/2011	Snedden et al.	
D647,530	S	10/2011	Busch	
8,079,478	B2	12/2011	Short et al.	
D655,604	S	3/2012	Molina et al.	
D671,831	S	12/2012	Moreau	
D685,227	S	7/2013	Boonprasop	
8,528,775	B2	9/2013	Martin	
8,544,208	B2	10/2013	Huang	
D696,948	S	1/2014	Kim	
D181,321	S	4/2014	Stowell	
D702,547	S	4/2014	Akana et al.	
D703,055	S	4/2014	Park	
8,899,443	B2	12/2014	Soibel et al.	
8,925,725	B1	1/2015	Burnett	
D731,891	S	6/2015	Servaire	
D749,381	S	2/2016	Magri	
9,334,086	B2	5/2016	Bean et al.	
D765,389	S	9/2016	Martin	
D769,079	S	10/2016	Kotani	
D775,959	S	1/2017	Owen et al.	
D794,944	S	8/2017	Martin	
9,801,488	B2	10/2017	Affatato et al.	
D806,543	S	1/2018	Finkbohner et al.	
D812,939	S	3/2018	Modlin	
D814,831	S	4/2018	Modlin	
9,981,790	B1	5/2018	Ost et al.	
D821,738	S	7/2018	Small	
D830,779	S	10/2018	Li et al.	
D842,494	S	3/2019	Lee	
D849,526	S	5/2019	Sanders et al.	
D861,475	S	10/2019	Giwani	
D862,226	S	10/2019	Horn	
D866,334	S	11/2019	Wieland et al.	
D877,930	S	3/2020	Santamarta	
2003/0234208	A1	12/2003	Huang	
2005/0092751	A1	5/2005	Alvares et al.	
2007/0051826	A1	3/2007	Schofield	
2009/0057326	A1	3/2009	Opitz	
2009/0261100	A1	10/2009	McMinn	
2010/0300370	A1	12/2010	Hundt	
2013/0280147	A1	10/2013	Kang	
2013/0313217	A1	11/2013	Yamamoto et al.	
2016/0031605	A1	2/2016	Bean et al.	
2017/0275075	A1	9/2017	Bamonte et al.	
2018/0362215	A1	12/2018	Whetsel et al.	
2019/0009967	A1	1/2019	Lung	
2019/0152648	A1	5/2019	Parve et al.	
2020/0113353	A1	4/2020	Bigioni et al.	
2020/0130901	A1	4/2020	Karll	

OTHER PUBLICATIONS

Bud Bar Brochure. Sep. 29, 2011, [online]. Available: http://web.archive.org/web/20110725063930/http://www.budbardisplays.com/BudBarBrochure.pdf, 12 pages.

Canna-Pod. Jul. 2, 2014 [online]Available: https://web.archive.org/web/20140702032541/http://budbardisplays.com/bud_pods.htm, 6 pages.

* cited by examiner

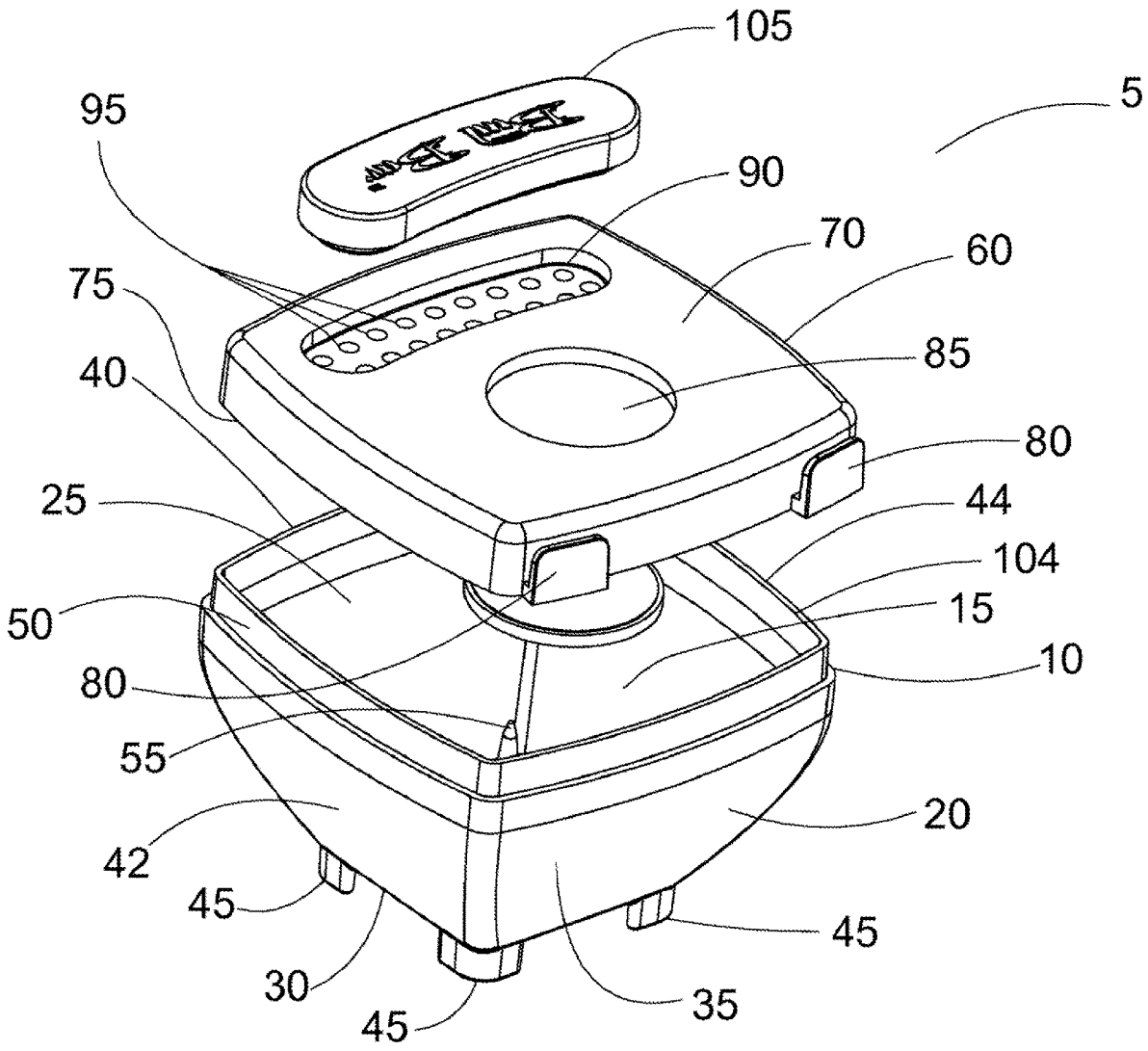
105
5
95
90
70
60
75
85
40
80
25
44
104
50
15
10
80
55
20
42
45
45
30
35
45

FIG. 1

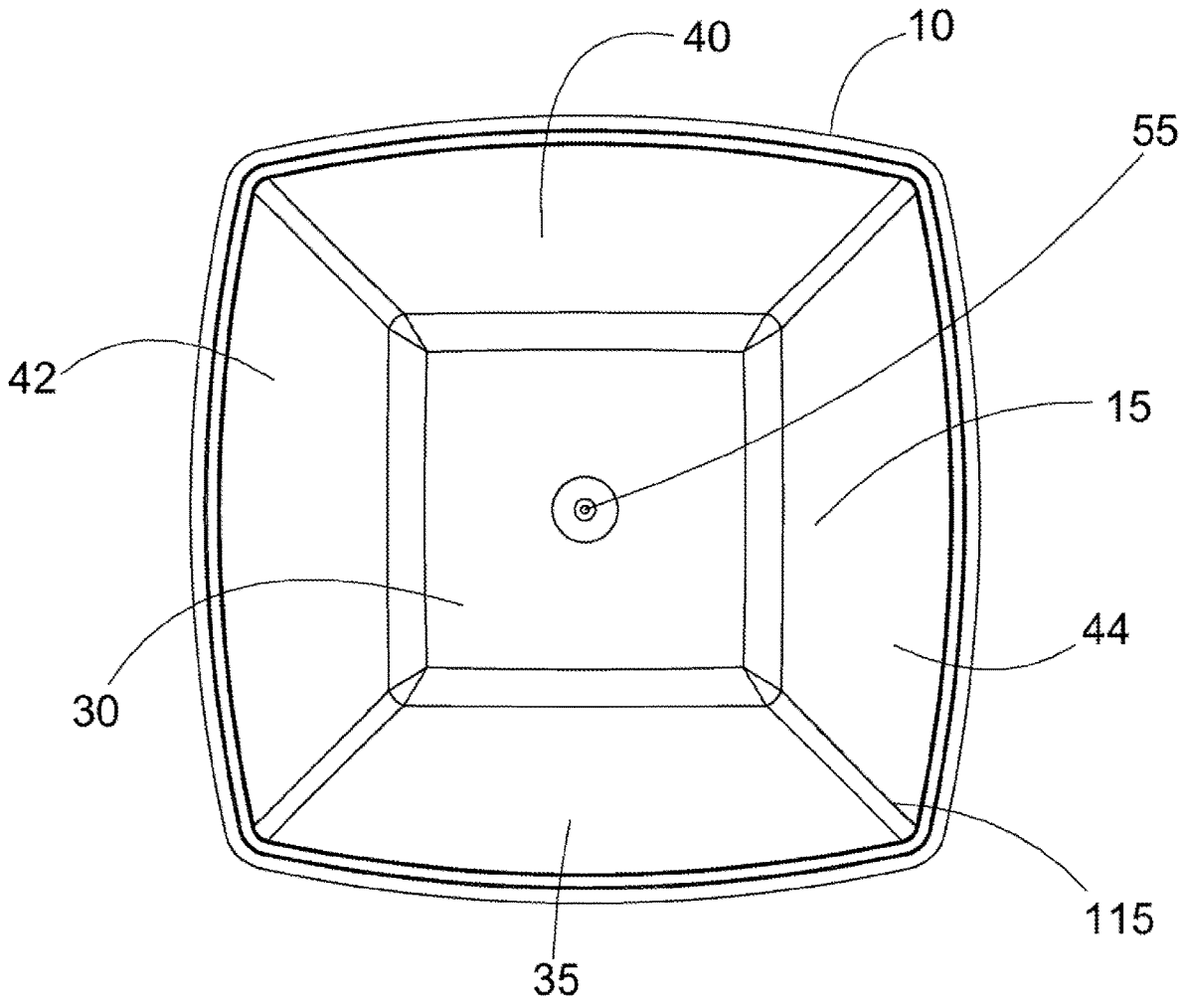

FIG. 2

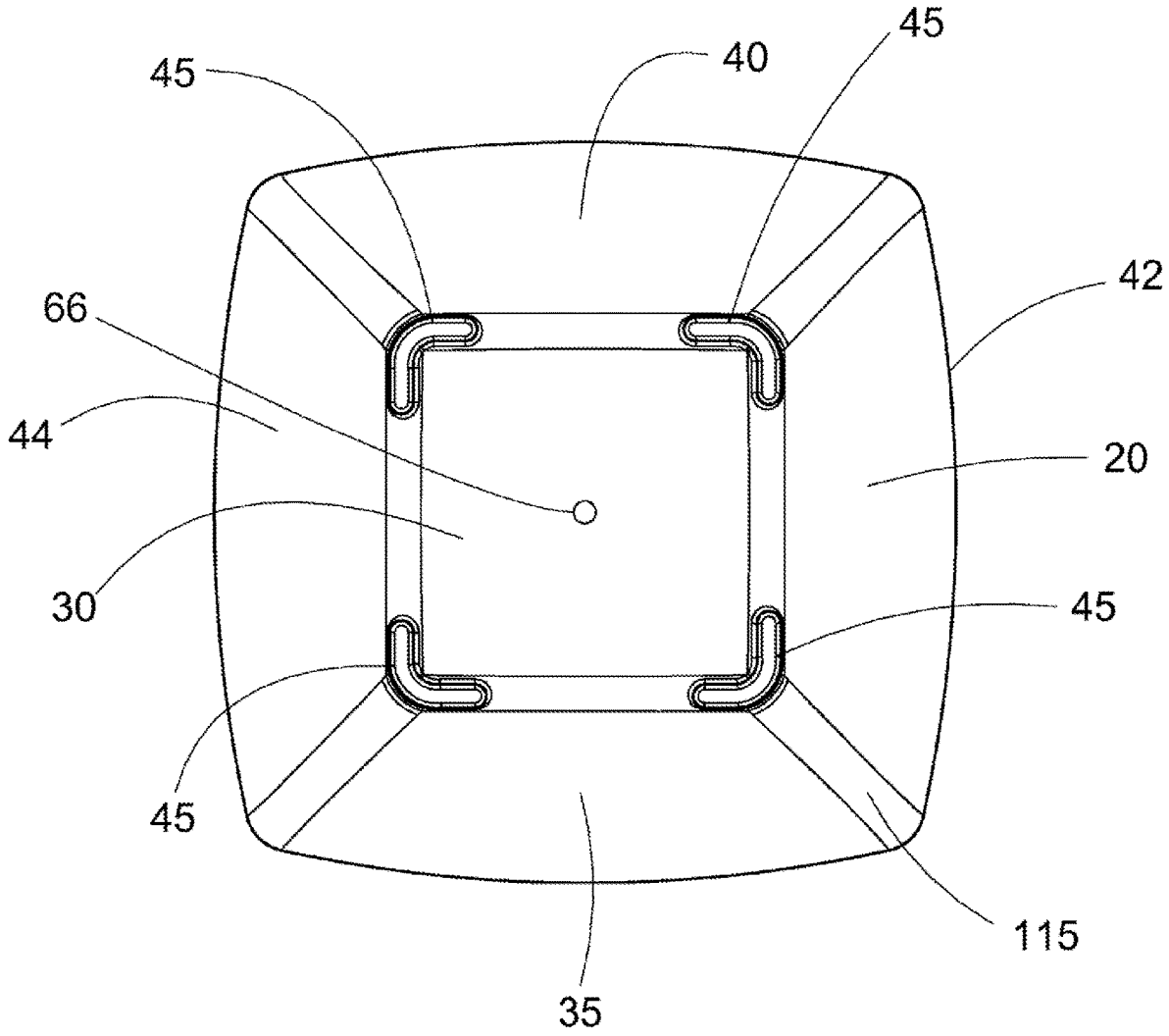

FIG. 3

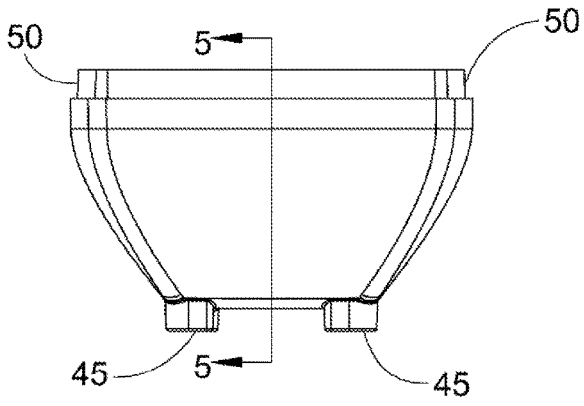

FIG. 4

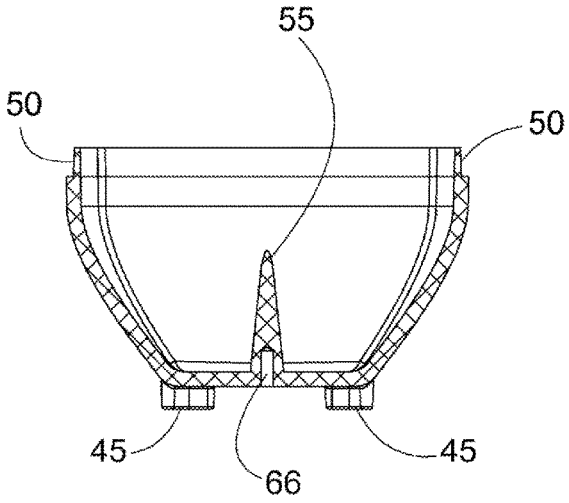

FIG. 5

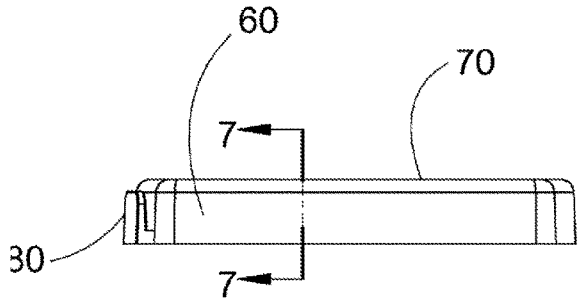

FIG. 6

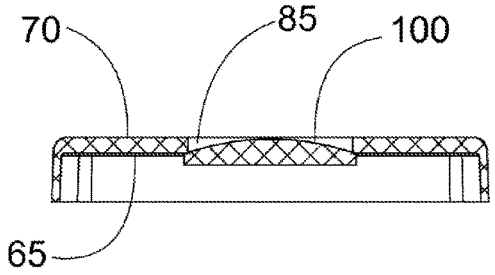

FIG. 7

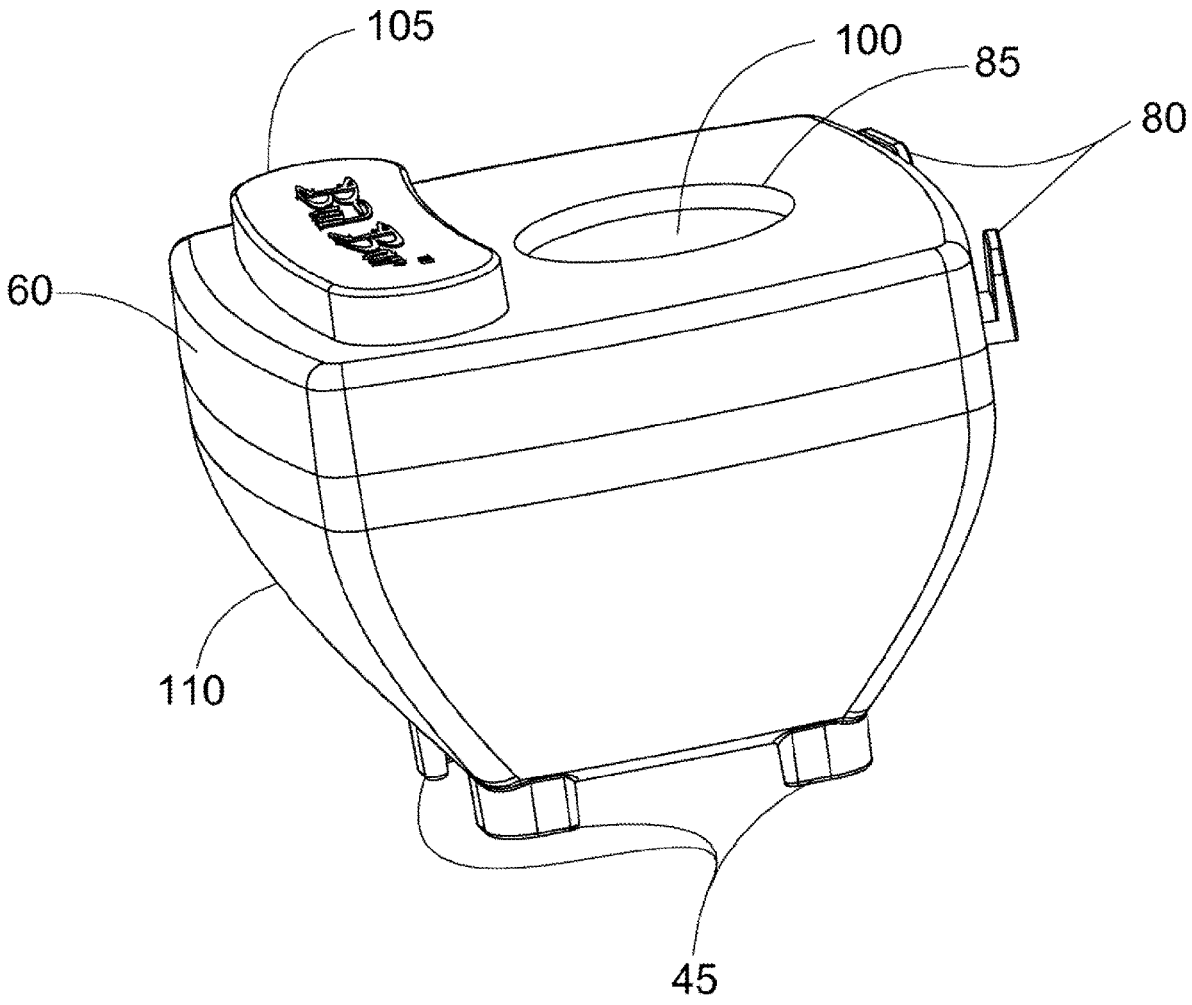

FIG. 8

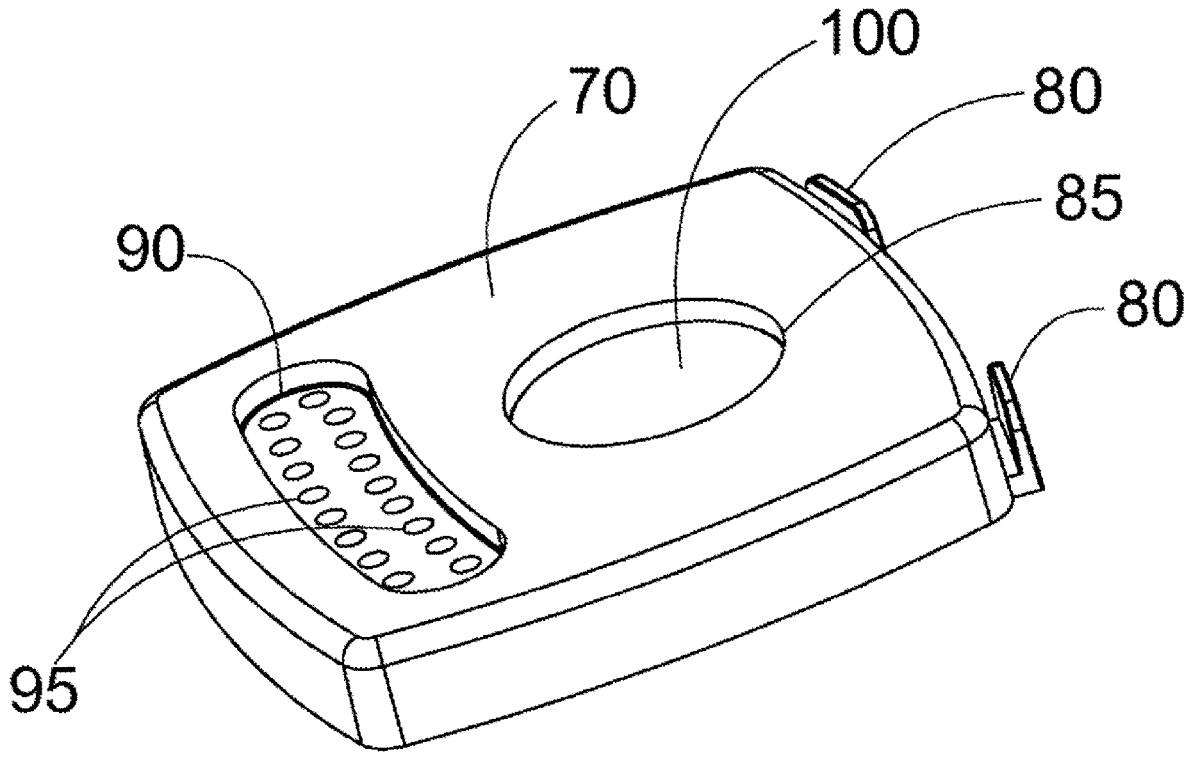

FIG. 9

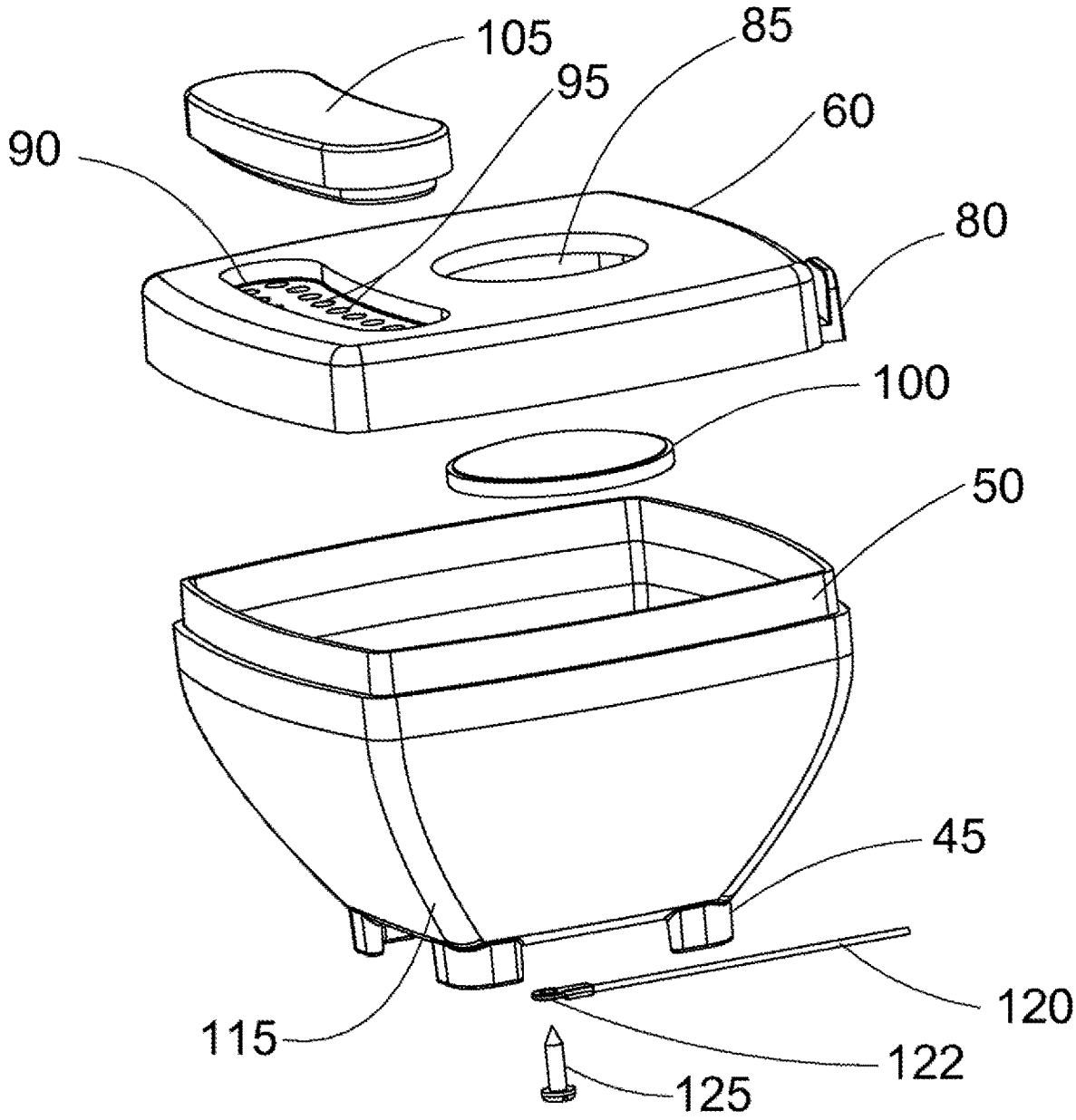

FIG. 10

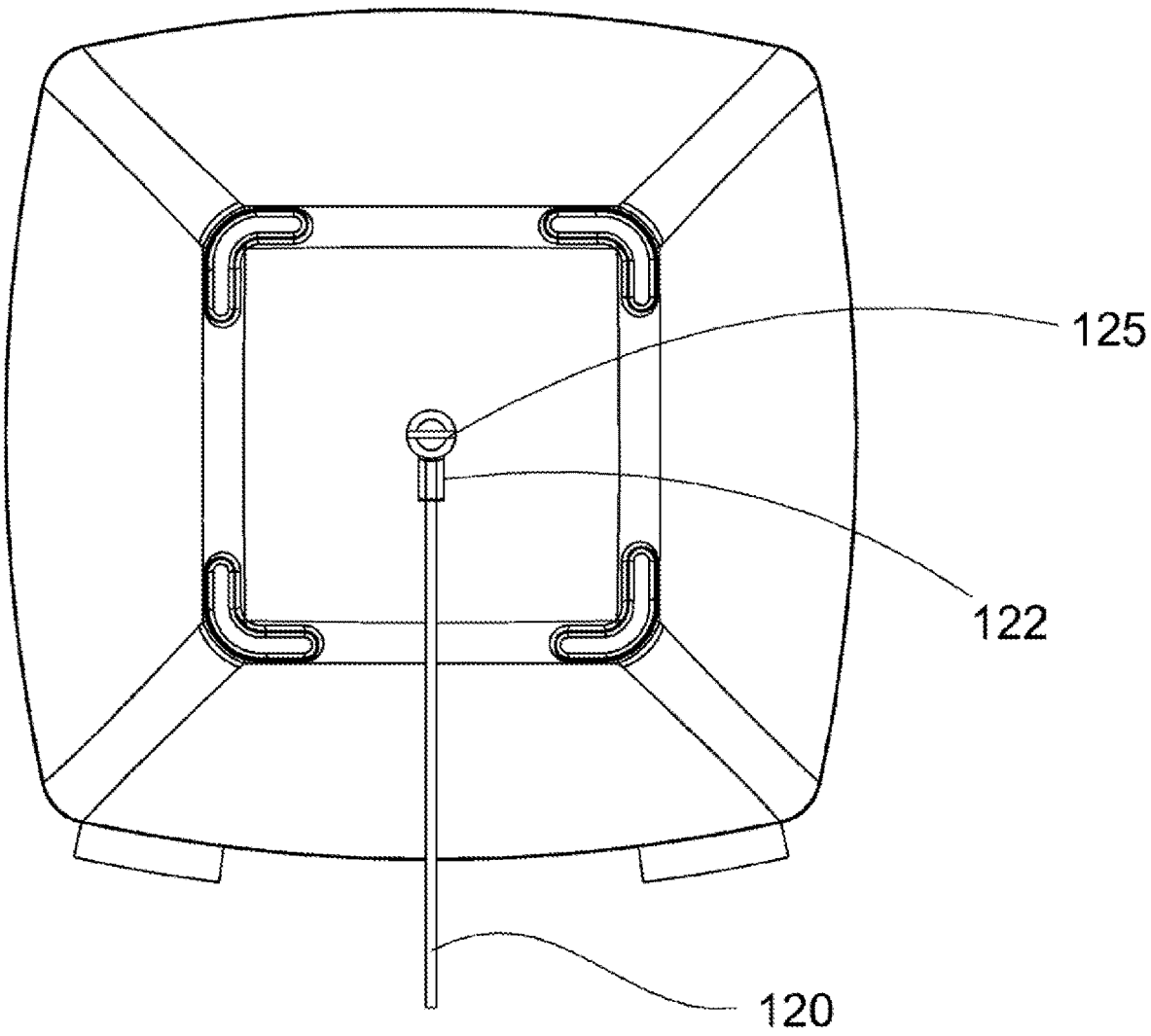

FIG. 11

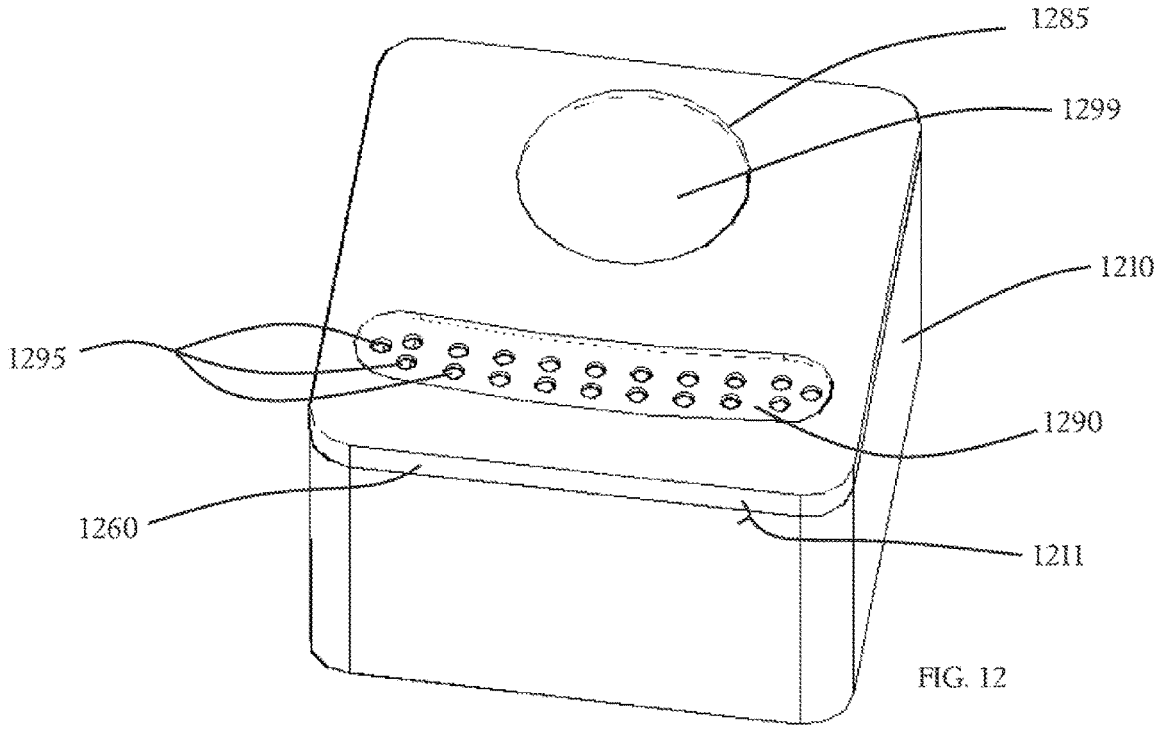

FIG. 12

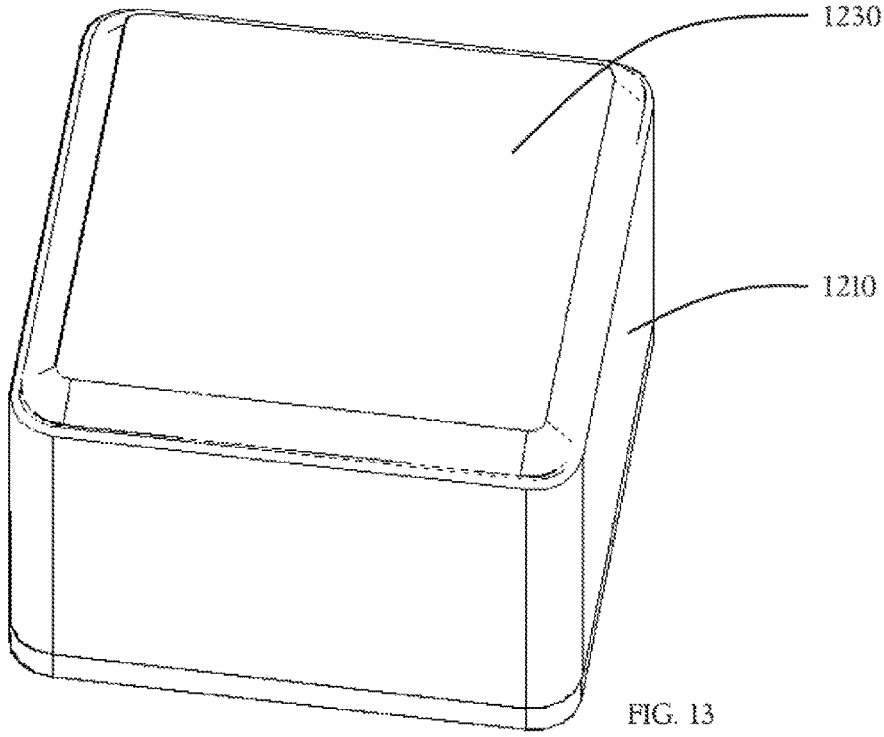

FIG. 13

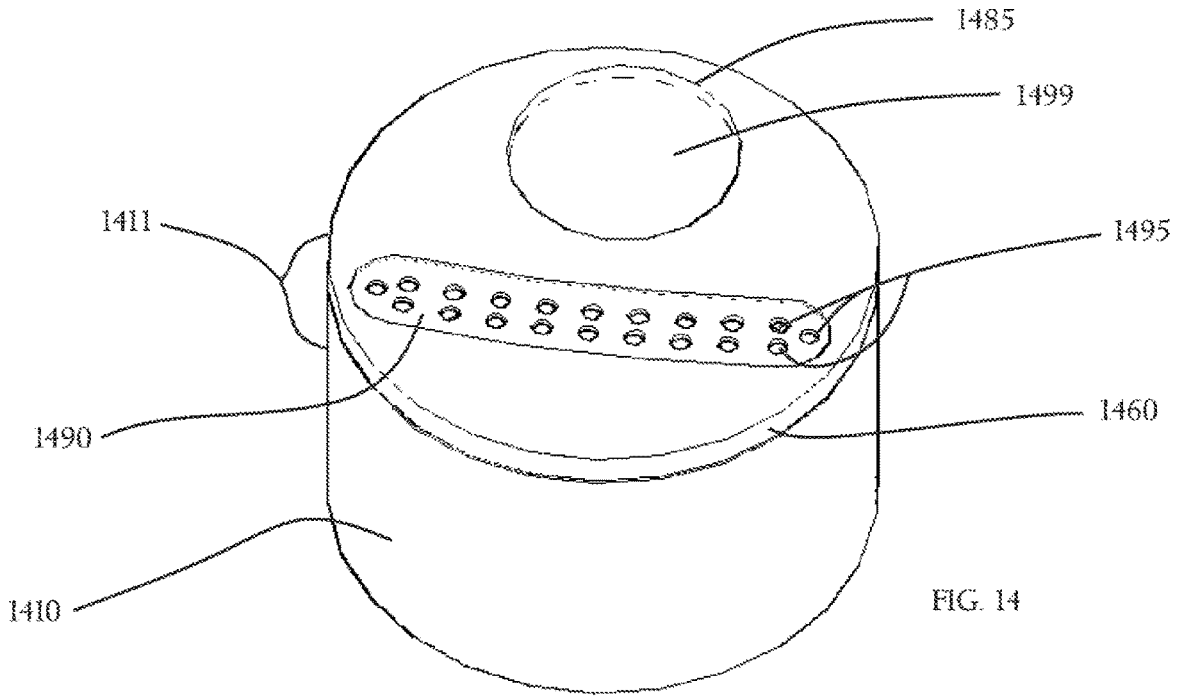

FIG. 14

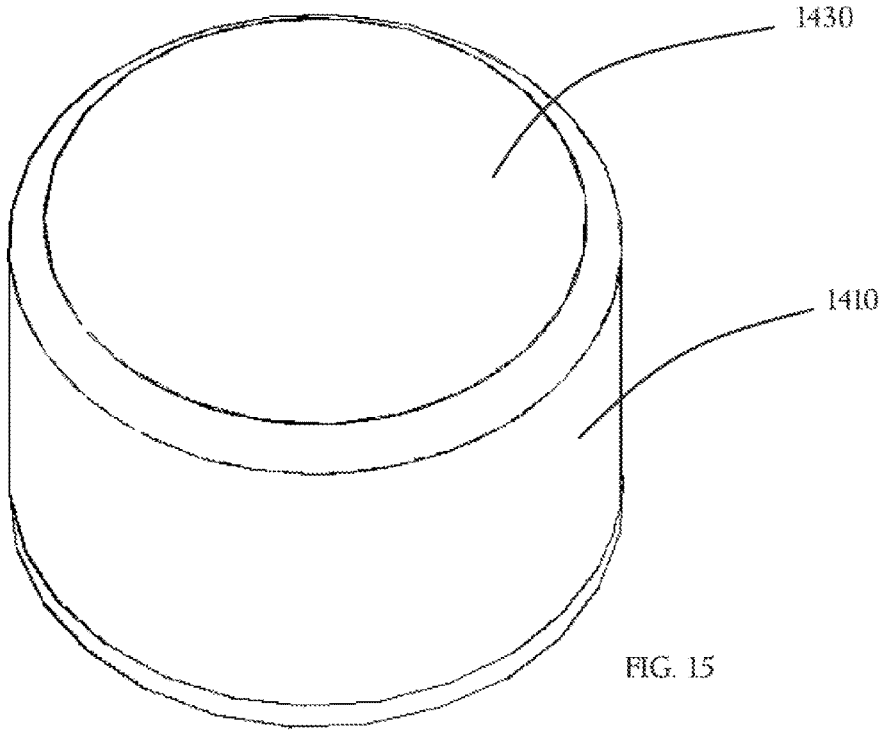

FIG. 15

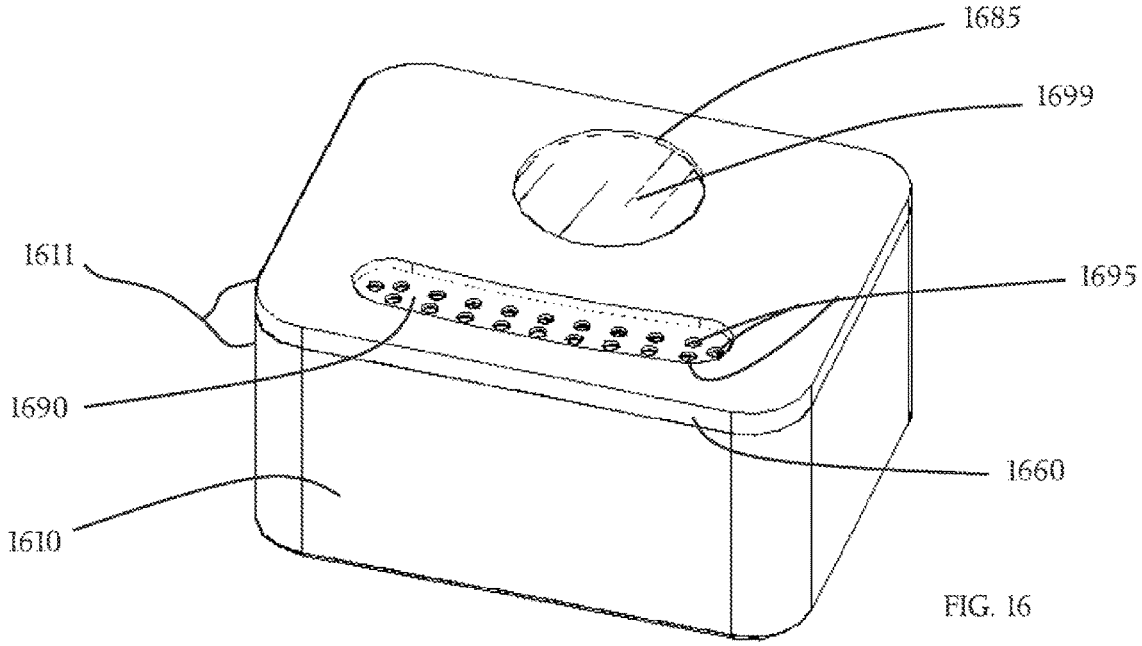

FIG. 16

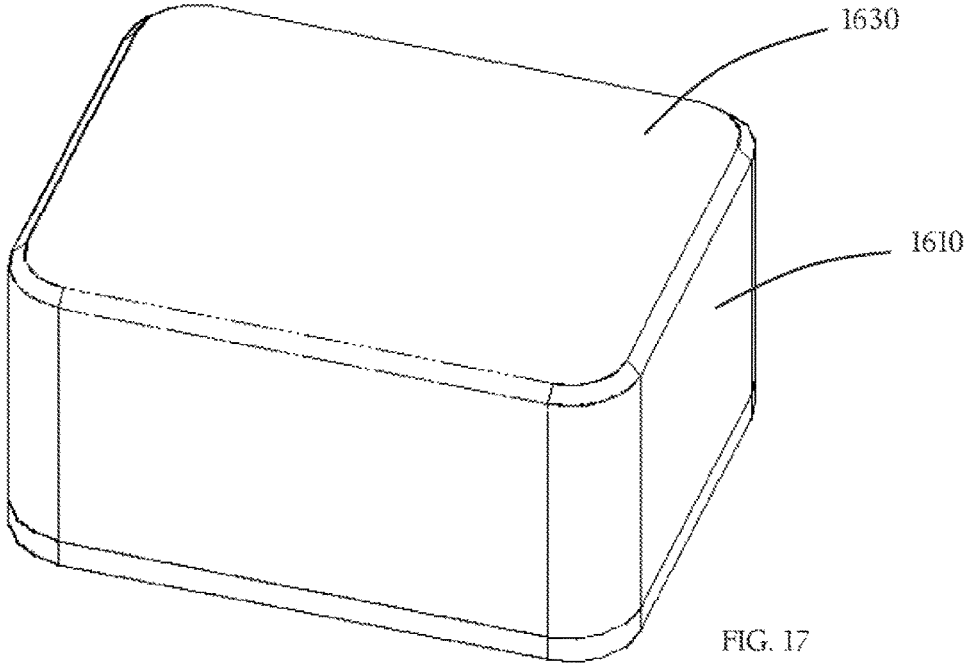

FIG. 17

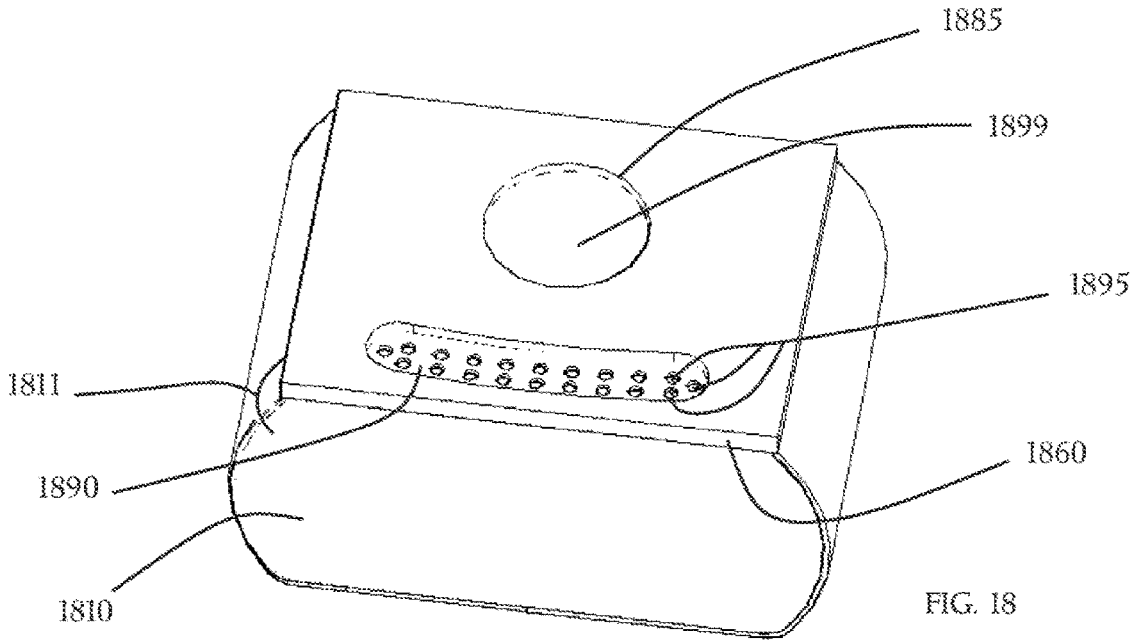

FIG. 18

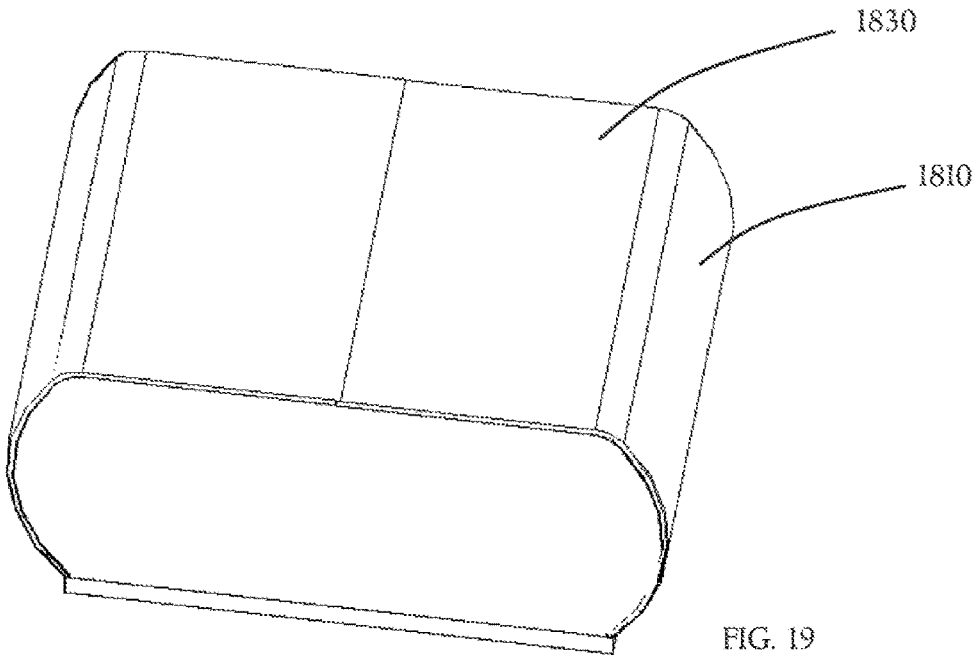

FIG. 19

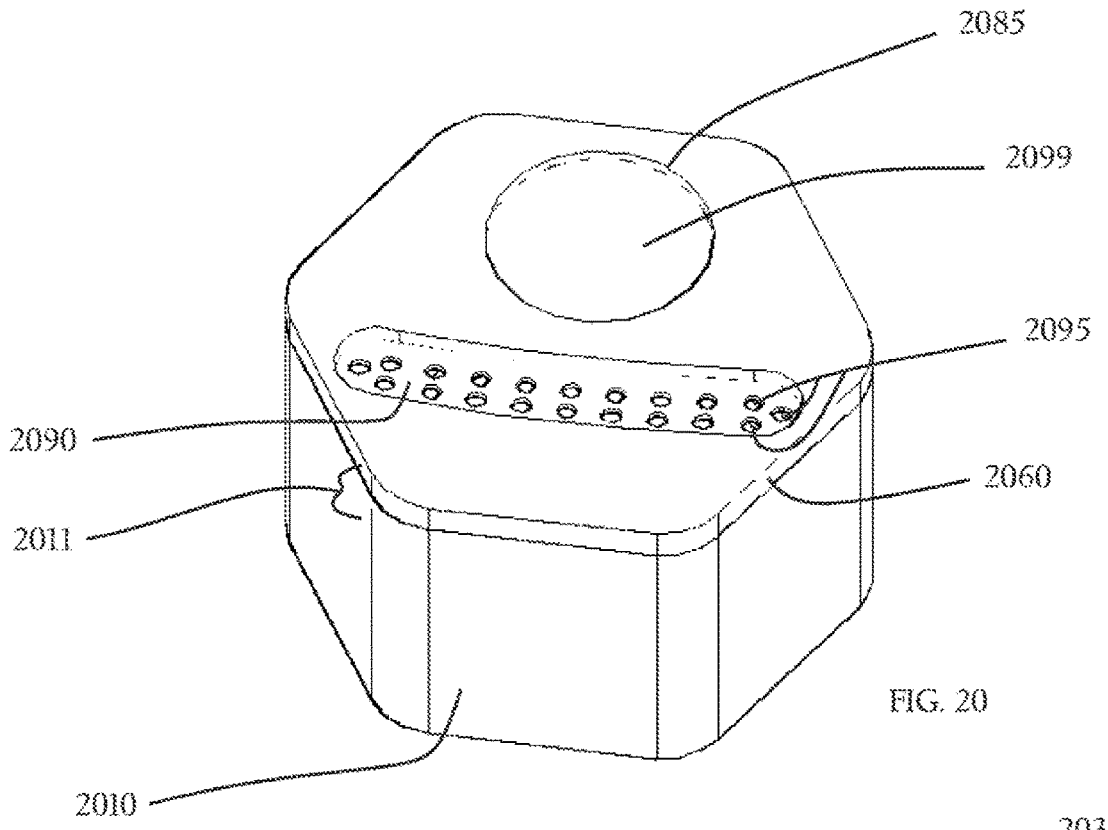

FIG. 20

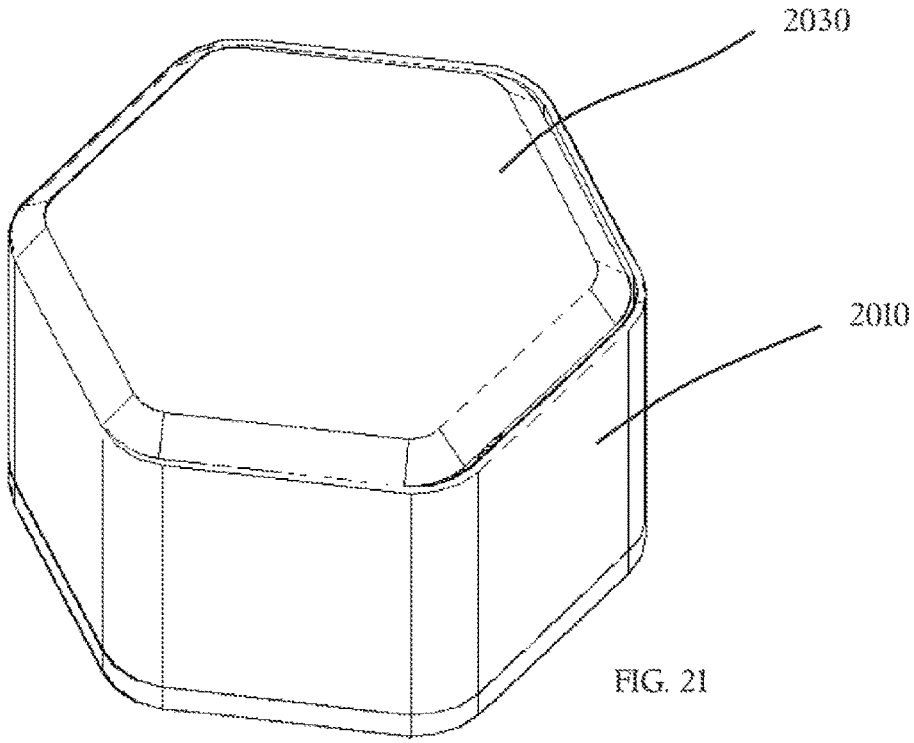

FIG. 21

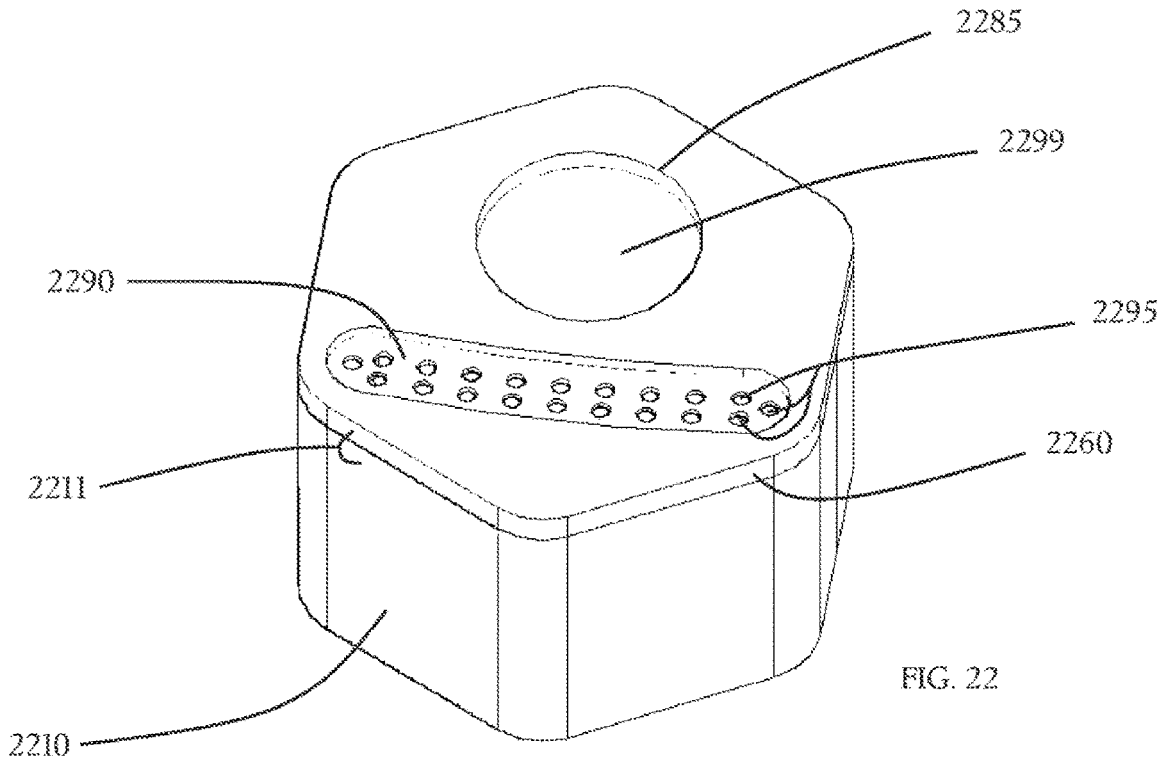

FIG. 22

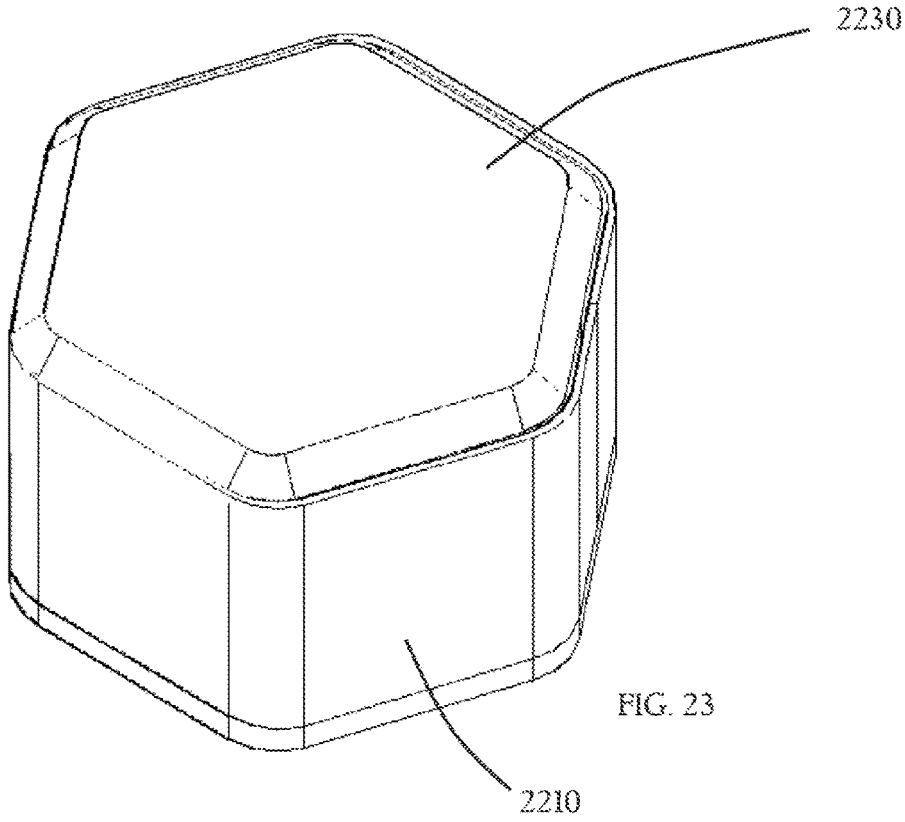

FIG. 23

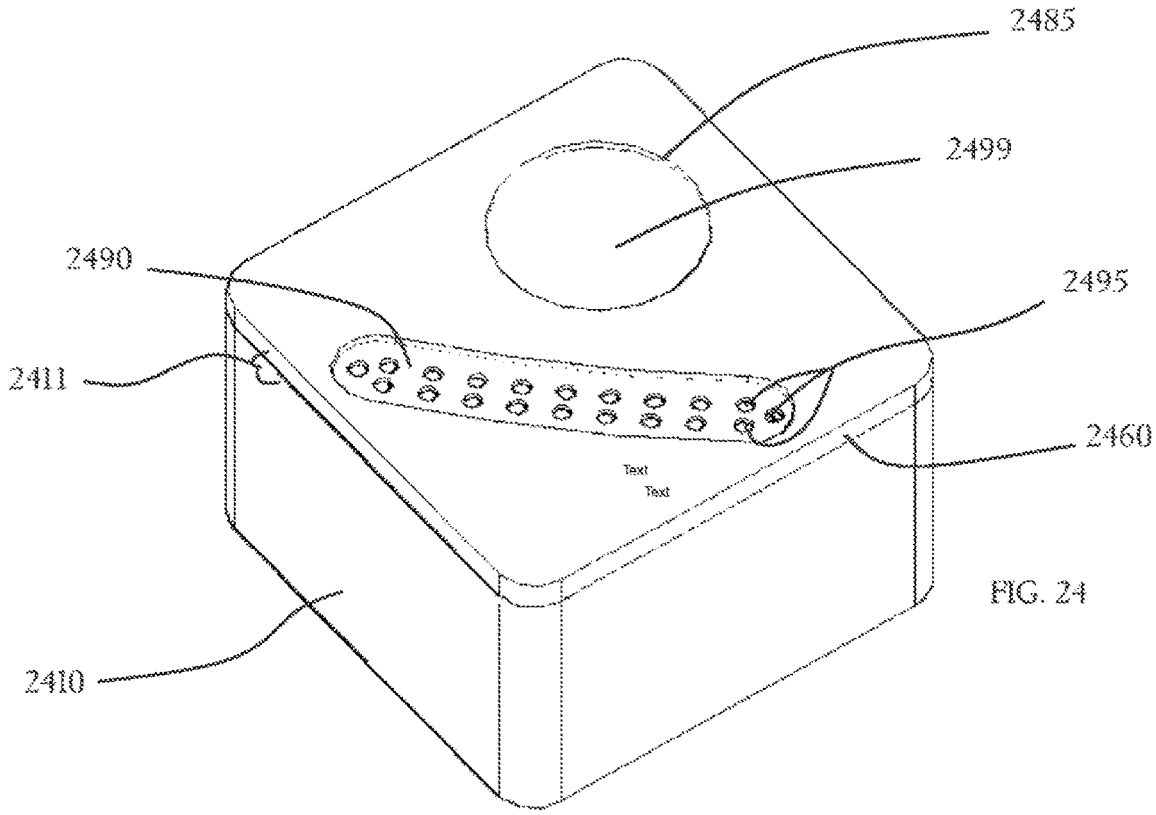

FIG. 24

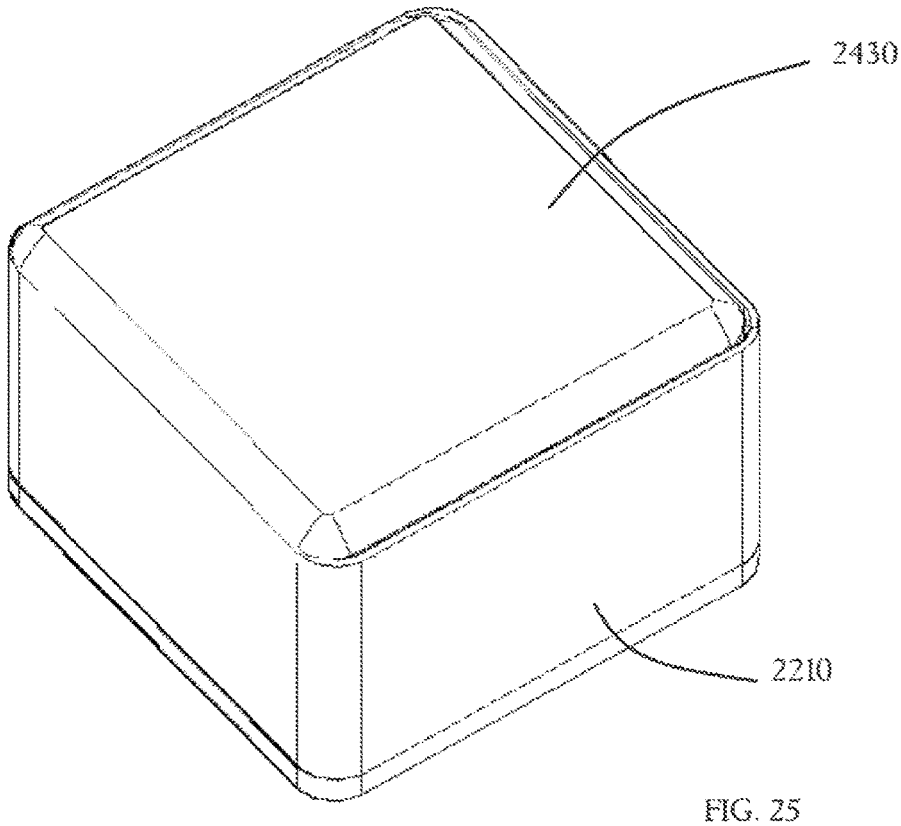

FIG. 25

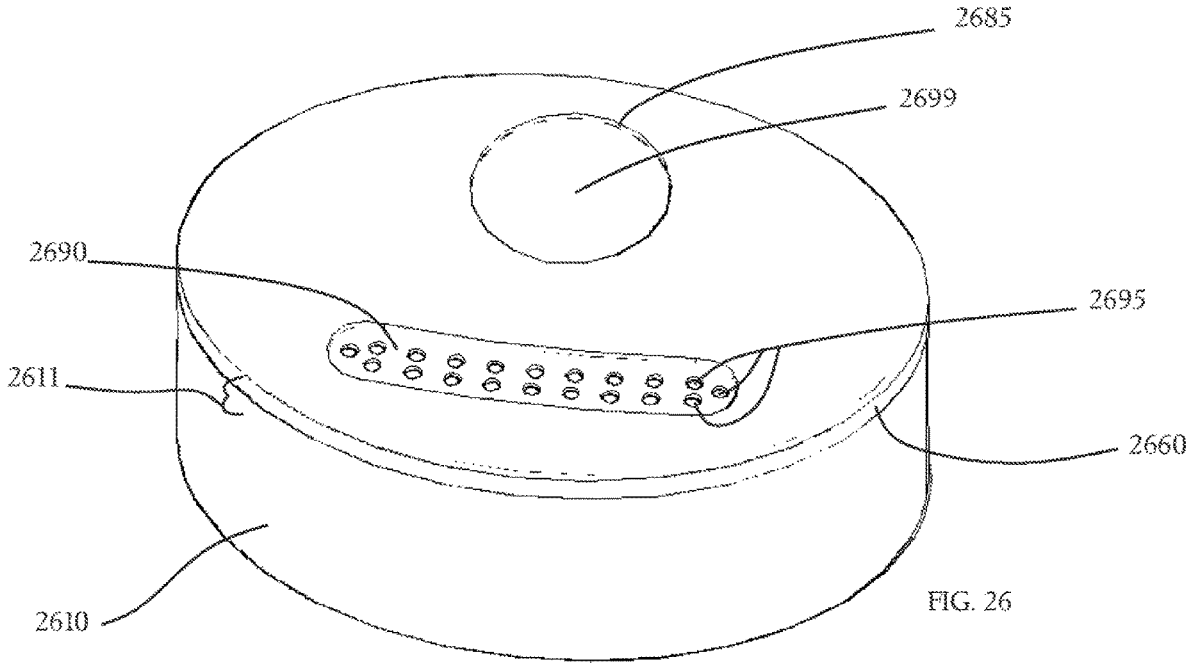

FIG. 26

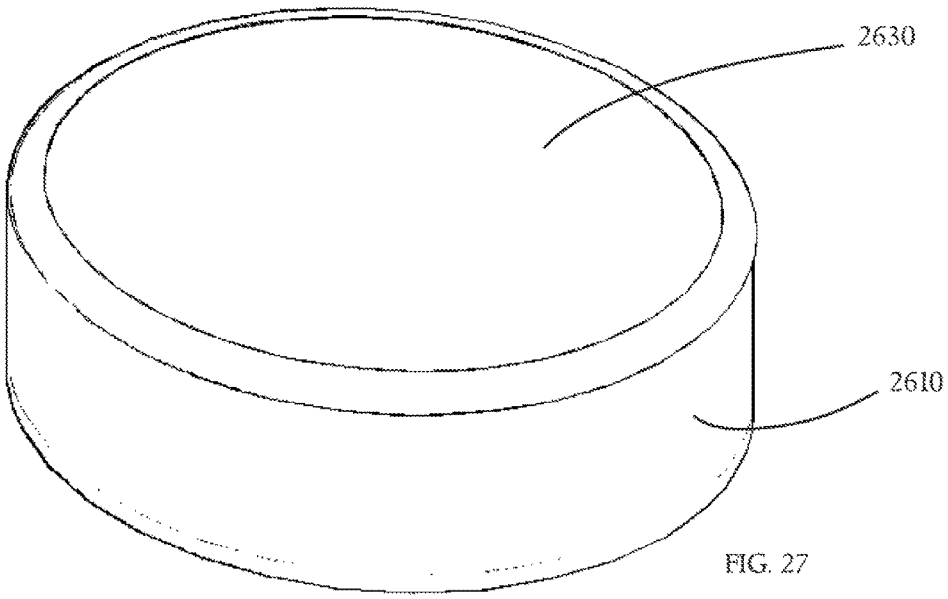

FIG. 27

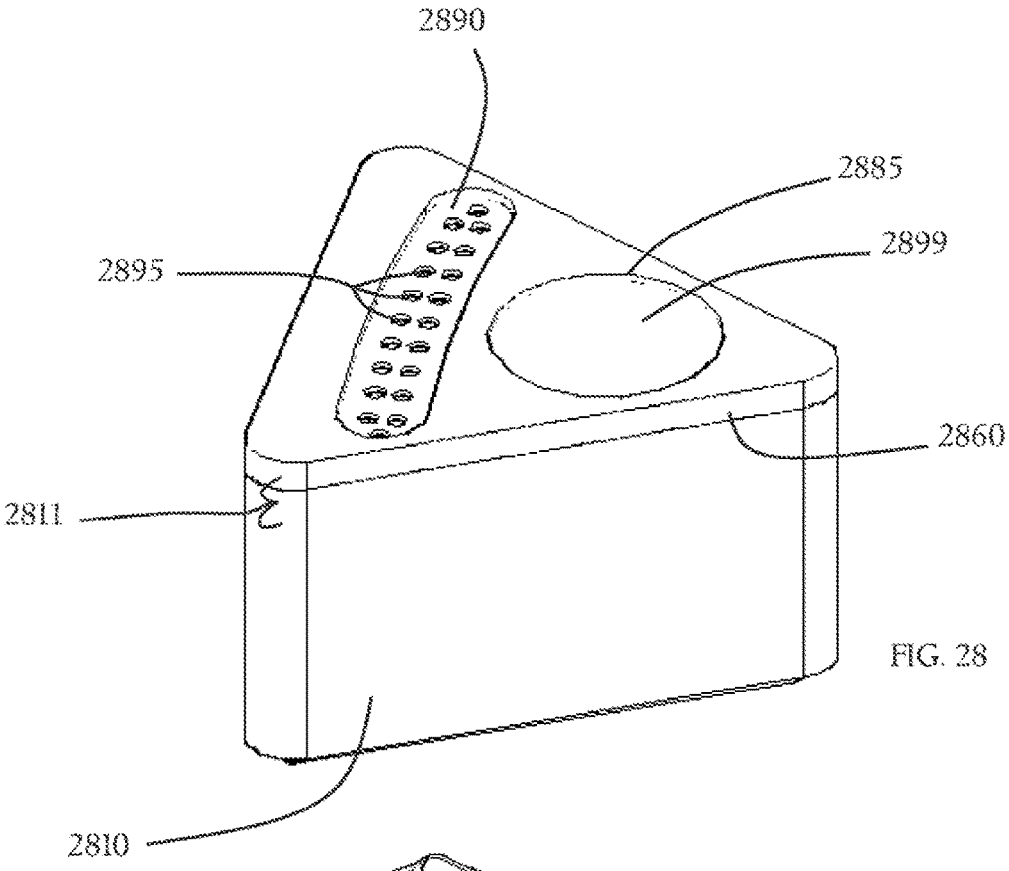

FIG. 28

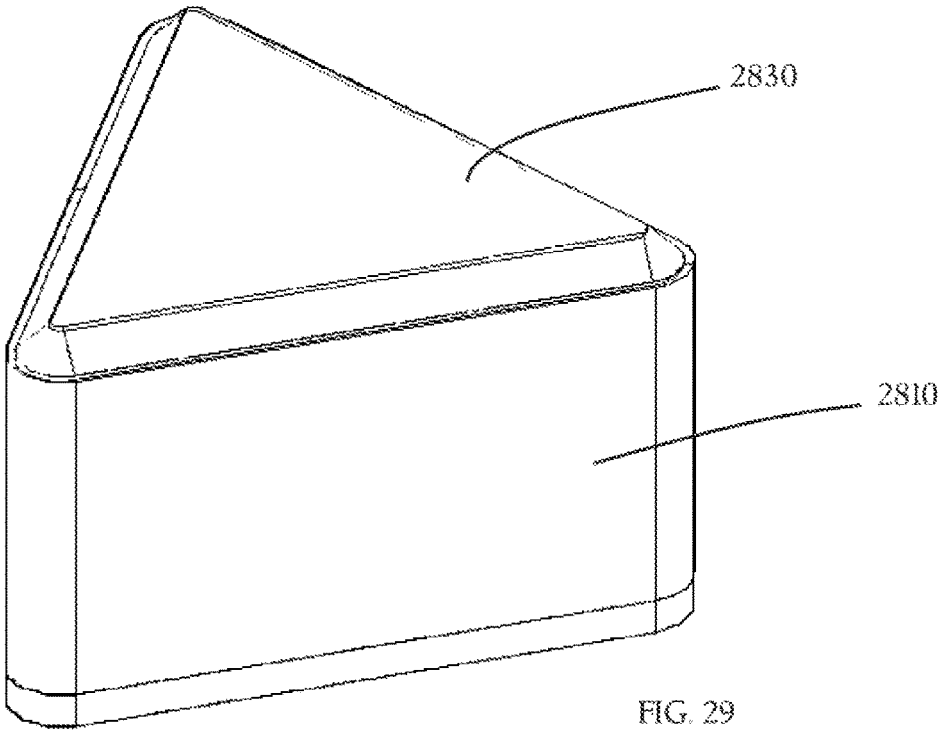

FIG. 29

CONTAINER FOR PROVIDING AROMATIC SAMPLING AND VISUALIZATION OF CONTENTS

CROSS-REFERENCE TO RELATED APPLICATIONS

This application is a continuation of and claims priority to U.S. patent application Ser. No. 15/464,823 filed Mar. 21, 2017; which application is a continuation in part of and claims priority to U.S. patent application Ser. No. 14/701,961 filed May 1, 2015, now U.S. Pat. No. 9,630,747, issued Apr. 25, 2017, all of which is incorporated by reference in their entirety and made part of this specification.

BACKGROUND

Field of the Invention

Display containers are known in the prior art. Customers commonly wish to visualize contents contained within a display container, and on some occasions, visualize contents under magnification. Further, prospective purchasers frequently wish to test the aroma of contained contents for suitability, freshness, or other features. For example, customers wishing to purchase tea may wish to inspect leaves and sample the aroma. Further, purchasers of legally available cannabis commonly wish to inspect the botanical product in detail and sample aroma. Such display containers that permit adequate storage, preservation, and presentation of botanical samples, such as cannabis, are not adequately described or available.

SUMMARY

According to some aspects, a container for displaying, visualizing, and aroma sampling botanical materials—such as tea, cannabis, and the like—is disclosed. In some examples, the container can permit stabilization and magnification of a portion of a sample material—such as a botanical sample.

DRAWINGS

FIG. **1** is an exploded perspective view of an embodiment of the present invention.

FIG. **2** is a top view of an embodiment container body of the present invention.

FIG. **3** is a bottom view of an embodiment container body of the present invention.

FIG. **4** is a side elevation view of an embodiment container body of the present invention.

FIG. **5** is a cross-sectional view taken through line **5-5** of FIG. **4**.

FIG. **6** is a side elevation view of an embodiment lid of the present invention.

FIG. **7** is a cross-sectional view taken through line **7-7** of FIG. **6**.

FIG. **8** is a perspective view of an embodiment of the present invention.

FIG. **9** is a perspective view of an embodiment lid of the present invention.

FIG. **10** is an exploded view of an embodiment of the present invention.

FIG. **11** is a bottom view of an embodiment container body and embodiment tether.

FIG. **12** is a perspective view of an embodiment square container body.

FIG. **13** is a bottom perspective view of an embodiment square container body.

FIG. **14** is a perspective view of an embodiment round container body.

FIG. **15** is a bottom perspective view of an embodiment round container body.

FIG. **16** is a perspective view of an embodiment rectangle container body.

FIG. **17** is a bottom perspective view of an embodiment rectangle container body.

FIG. **18** is a perspective view of an embodiment oval cross-section container body.

FIG. **19** is a bottom perspective view of an embodiment oval cross-section container body.

FIG. **20** is a perspective view of a first embodiment hexagonal container body.

FIG. **21** is a bottom perspective view of a first embodiment hexagonal container body.

FIG. **22** is a perspective view of a second embodiment hexagonal container body.

FIG. **23** is a bottom perspective view of a second embodiment hexagonal container body.

FIG. **24** is a perspective view of an embodiment diamond container body.

FIG. **25** is a bottom perspective view of an embodiment diamond container body.

FIG. **26** is a perspective view of an embodiment oval container body.

FIG. **27** is a bottom perspective view of an embodiment oval container body.

FIG. **28** is a perspective view of an embodiment triangle container body.

FIG. **29** is a bottom perspective view of an embodiment triangle container body.

DESCRIPTION

Turning now to FIG. **1**, container **5** comprises, a container body **10** having an interior surface **15** and exterior surface **20**. Container body **10** is shaped to define an open top **25**, a bottom **30**, a front **35**, a back **40**, a first side **42**, a second side **44**, and a plurality of feet **45**. Container body **10** is further shaped to define a perimetrical ridge **50** surrounding said open top **25**. A portion of the container body **10** is shaped to define mounting projection **55** to hold a subject sample such as a botanical sample.

Lid **60** has an interior lid surface **65** (FIG. **7**) and exterior lid surface **70**. Lid **60** is shaped to define a perimeter **75**, and optionally further shaped to define at least one projection **80** disposed on a portion of said exterior surface **70** of said lid **60**. One or more projection **80** functions as a card holder to provide information on the sample within container body. Optionally, projection **80** is omitted and informational material is presented within container body—such as a portion of container body **10** shaped to define a card holder within container body **10**. Lid **60** is further shaped to define a viewing opening **85**. Lid **60** is further shaped to define a recessed area **90**, and further shaped to define a plurality of scent openings **95** within said recessed area **90**. In one example embodiment, scent openings are about 0.125 inches in diameter and arranged in two rows. Removable plug **105** shaped to fit within recessed area **90** forming an airtight seal. In one embodiment, the recessed area and removable plug are omitted, and scent holes are located flush on the surface of lid **60**, and optionally scent hole patency is adjustable.

Turning to FIG. **7**, Lens **100** disposed to cover said viewing opening **85**. Lens **100** may be affixed to lid **60** by snap fit, or friction fit or adhesively. Lens **100** covers viewing opening **85**. Lens **100** forms an airtight seal between lens **100** and said lid **60**. In a preferred embodiment, lens **100** is adhesively affixed within viewing opening **85**. In one embodiment, lens **100** is a plano-convex lens such as Lens #90-1235 manufactured by J.P. Manufacturing. A variety of lenses may be used such as a 1×, 2×, or 3× magnifier. In an alternative embodiment, the lens is not a magnifier.

Turning to FIG. **8**, Lid **60** is fitted on the perimetrical ridge **50** of said container body **10** forming an airtight chamber **110**, wherein said plug **105** forms an airtight seal between plug **105** and recessed area **90** of said lid **60** completely sealing chamber **110**. In one embodiment, plug **105** is comprised of soft material such as soft rubber or silicone. Lid **60** is further illustrated by FIG. **9**.

FIG. **2** illustrates a top view of container body **10** showing interior surface **15**. It should be noted that in one embodiment, corners **115** between container body **10** front **35**, a back **40**, a first side **42**, a second side **44**, are rounded, yet in an alternative embodiment corners may be relatively sharp.

FIG. **3** illustrates a bottom view of container body **10** showing exterior surface **20**. In one embodiment, bottom **30** is flat, in another embodiment, container body **10** bottom may be convex or concave. In a preferred embodiment, bottom **30** is flat and feet **45** allow container body **10** to be set on a flat resting surface where bottom **30** is not in contact with the flat surface. Mounting recess **66** allows an optional tether **120** to be affixed to the apparatus (FIGS. **10-11**). In one embodiment, illustrated by FIGS. **10-11**, tether **120** terminates in eyelet **122**. Eyelet **122** is affixed to container **5** by screw **125** which passes through eyelet **122** and tapped into recess **66** thereby holding eyelet **122** and tether **120** in place. Tether **120** allows apparatus **5** to be carried by tether. Apparatus **5** may be rested on a flat surface with tether **120** in place because feet **45** provide sufficient clearance between the eyelet and the flat resting surface.

FIG. **4** illustrates a side elevation view illustrating feet **45** and perimetrical ridge **50**.

FIG. **5** is a sectional view taken through line **5-5** of FIG. **4**, illustrating a section of mounting spike **55** and recess **66** within. FIG. **6** is a side elevation view of lid **60** demonstrating exterior lid surface **70** and projection **80**. FIG. **7** is a sectional view taken through line **7-7** of FIG. **6**. Lens **100** is shown within viewing opening **85**. In one preferred embodiment, lens **100** is countersunk within viewing opening **85**. In an alternative, lens **100** may be domed above viewing opening **85**. Lens **100** may be mounted on or within viewing opening **85** in any fashion permitting visualization through viewing opening **85**. In one embodiment, lens **100** may be replaced with a window which provides viewing but lacks magnification power.

In use, a botanical sample, such as a sample of cannabis, is selected and placed within container body **10**. A portion of the sample may be mounted on mounting projection **55**. In one example, the end of mounting projection **55** is relatively sharp and capable of piercing a botanical sample—such as a botanical sample of cannabis. The sample is held on projection **55** due to frictional contact with the sample and aided by the sticky nature of the resin. Lid **60** engages perimetrical ridge **50** container body **10** fastening lid **60** and container body **10** together to form chamber **110**. Plug **105** is inserted within recessed area **90** to seal the plurality of scent openings **95** to make chamber **110** airtight. An identification card, bearing information about the botanical product, may be secured by two projections **80**. Turning to FIGS. **10** and **11**, an optional, tether **120** may be affixed as described above. In one embodiment, such a tether may be a lanyard worn about the neck. In another embodiment, tether **125** may be retractable. Tether **125** may be affixed by other means—screw **125** and eyelet **122** providing only an example. The above example of use applies to container bodies of all shapes described herein, which may or may not include mounting projection **55**. If the container does not include a mounting projection, the botanical sample would rest on the internal surface of the container.

Container body **10** and lid **60**, and any container body and lid described herein, may be formed by injection molding and comprised of Poly(methyl methacrylate) (PMMA). Alternatively, container body **10** and lid **60** may be comprised of Styrene Acrylonitrile resin (SAN) or polycarbonate plastic. Container body **10** and lid **60** may be comprised of any moldable material. Container body **10** and lid **60** may be transparent, translucent or opaque—depending on the specimen to be contained within.

Container **5**, and other containers and container bodies described herein, may be used for a variety of purposes. For example the inventive apparatus may be used as an entomological storage display. In an alternative, mounting projection **55** may be outfitted with one or more pins, clips, fasteners, prong holder, or adhesive contacts to prepare and display specimens. Further, the present invention is of use for storage, presentation and display of many other items where magnification of the sample or product is desired. For example, projection **55** may be modified to hold other collectable collectible items such as coins, stamps, or jewelry. It these embodiments, lid **60** will be optional shaped without a recessed area or scent holes, or shaped to provide an opening for ventilation. In one embodiment, lid **60** provides user-adjustable ventilation.

FIG. **12** illustrates a container body **1210** shaped to define a square having a bottom surface **1230** (illustrated by FIG. **13**). Lens **1299** is shown within viewing opening **1285**. In one preferred embodiment, lens **1299** is countersunk within viewing opening **1285**. In an alternative, lens **1299** may be domed above viewing opening **1285**. Lens **1299** may be mounted on or within viewing opening **1285** in any fashion permitting visualization through viewing opening **1285**. In one embodiment, lens **1299** may be replaced with a window which provides viewing but lacks magnification power. Lid **1260** fits snugly on container body **1210** forming an airtight seal, defining chamber **1211**. Plug **105**, illustrated by FIGS. **1**, **8**, and **10**, is inserted within recessed area **1290** to seal the plurality of scent openings **1295** to make chamber **1211** airtight.

FIG. **14** illustrates a round embodiment container body **1410** having a bottom surface **1430** (illustrated by FIG. **15**). Lens **1499** is shown within viewing opening **1485**. In one preferred embodiment, lens **1499** is countersunk within viewing opening **1485**. In an alternative, lens **1499** may be domed above viewing opening **1485**. Lens **1499** may be mounted on or within viewing opening **1485** in any fashion permitting visualization through viewing opening **1485**. In one embodiment, lens **1499** may be replaced with a window which provides viewing but lacks magnification power. Lid **1460** fits snugly on container body **1410** forming an airtight seal, defining chamber **1411**. Plug **105**, illustrated by FIGS. **1**, **8**, and **10**, is inserted within recessed area **1490** to seal the plurality of scent openings **1495** to make chamber **1410** airtight.

FIG. **16** illustrates a substantially rectangularly shaped embodiment container body **1610** having a bottom surface

1630 (illustrated by FIG. 17). Lens 1699 is shown within viewing opening 1685. In one preferred embodiment, lens 1699 is countersunk within viewing opening 1685. In an alternative, lens 1699 may be domed above viewing opening 1685. Lens 1699 may be mounted on or within viewing opening 1685 in any fashion permitting visualization through viewing opening 1685. In one embodiment, lens 1699 may be replaced with a window which provides viewing but lacks magnification power. Lid 1660 fits snugly on container body 1610 forming an airtight seal, defining chamber 1611. Plug 105, illustrated by FIGS. 1, 8, and 10, is inserted within recessed area 1690 to seal the plurality of scent openings 1695 to make chamber 1611 airtight.

FIG. 18 illustrates an oval cross-section shaped embodiment container body 1810 having a bottom surface 1830 (illustrated by FIG. 19). Lens 1899 is shown within viewing opening 1885. In one preferred embodiment, lens 1899 is countersunk within viewing opening 1885. In an alternative, lens 1899 may be domed above viewing opening 1885. Lens 1899 may be mounted on or within viewing opening 1885 in any fashion permitting visualization through viewing opening 1885. In one embodiment, lens 1899 may be replaced with a window which provides viewing but lacks magnification power. Lid 1860 fits snugly on container body 1810 forming an airtight seal, defining chamber 1811. Plug 105, illustrated by FIGS. 1, 8, and 10, is inserted within recessed area 1890 to seal the plurality of scent openings 1895 to make chamber 1811 airtight.

FIG. 20 illustrates a first substantially hexagonally-shaped embodiment container body 2010 having a bottom surface 2030 (illustrated by FIG. 21). Lens 2099 is shown within viewing opening 2085. In one preferred embodiment, lens 2099 is countersunk within viewing opening 2085. In an alternative, lens 2099 may be domed above viewing opening 2085. Lens 2099 may be mounted on or within viewing opening 2085 in any fashion permitting visualization through viewing opening 2085. In one embodiment, lens 2099 may be replaced with a window which provides viewing but lacks magnification power. Lid 2060 fits snugly on container body 2010 forming an airtight seal, defining chamber 2011. Plug 105, illustrated by FIGS. 1, 8, and 10, is inserted within recessed area 2090 to seal the plurality of scent openings 2095 to make chamber 2011 airtight.

FIG. 22 illustrates a second substantially hexagonally-shaped embodiment container body 2210 having a bottom surface 2230 (illustrated by FIG. 23). Lens 2299 is shown within viewing opening 2285. In one preferred embodiment, lens 2299 is countersunk within viewing opening 2285. In an alternative, lens 2299 may be domed above viewing opening 2285. Lens 2299 may be mounted on or within viewing opening 2285 in any fashion permitting visualization through viewing opening 2285. In one embodiment, lens 2299 may be replaced with a window which provides viewing but lacks magnification power. Lid 2260 fits snugly on container body 2210 forming an airtight seal, defining chamber 2211. Plug 105, illustrated by FIGS. 1, 8, and 10, is inserted within recessed area 2290 to seal the plurality of scent openings 2295 to make chamber 2211 airtight.

FIG. 24 illustrates diamond-shaped embodiment container body 2410 having a bottom surface 2430 (illustrated by FIG. 25). Lens 2499 is shown within viewing opening 2485. In one preferred embodiment, lens 2499 is countersunk within viewing opening 2485. In an alternative, lens 2499 may be domed above viewing opening 2485. Lens 2499 may be mounted on or within viewing opening 2485 in any fashion permitting visualization through viewing opening 2485. In one embodiment, lens 2499 may be replaced with a window which provides viewing but lacks magnification power. Lid 2460 fits snugly on container body 2410 forming an airtight seal, defining chamber 2411. Plug 105, illustrated by FIGS. 1, 8, and 10, is inserted within recessed area 2490 to seal the plurality of scent openings 2495 to make chamber 2411 airtight.

FIG. 26 illustrates an oval shaped embodiment container body 2610 having a bottom surface 2630 (illustrated by FIG. 27). Lens 2699 is shown within viewing opening 2685. In one preferred embodiment, lens 2699 is countersunk within viewing opening 2685. In an alternative, lens 2699 may be domed above viewing opening 2685. Lens 2699 may be mounted on or within viewing opening 2685 in any fashion permitting visualization through viewing opening 2685. In one embodiment, lens 2699 may be replaced with a window which provides viewing but lacks magnification power. Lid 2660 fits snugly on container body 2610 forming an airtight seal, defining chamber 2611. Plug 105, illustrated by FIGS. 1, 8, and 10, is inserted within recessed area 2690 to seal the plurality of scent openings 2695 to make chamber 2611 airtight.

FIG. 28 illustrates a first substantially triangle embodiment container body 2810 having a bottom surface 2830 (illustrated by FIG. 29). Lens 2899 is shown within viewing opening 2885. In one preferred embodiment, lens 2899 is countersunk within viewing opening 2885. In an alternative, lens 2899 may be domed above viewing opening 2885. Lens 2899 may be mounted on or within viewing opening 2885 in any fashion permitting visualization through viewing opening 2885. In one embodiment, lens 2899 may be replaced with a window which provides viewing but lacks magnification power. Lid 2860 fits snugly on container body 2810 forming an airtight seal, defining chamber 2811. Plug 105, illustrated by FIGS. 1, 8, and 10, is inserted within recessed area 2890 to seal the plurality of scent openings 2895 to make chamber 2811 airtight.

For illustrative purposes, mounting projection 55, described above, has not been shown in FIGS. 12-28, however, in one embodiment, any container body described herein may be shaped to define mounting projection 55 to hold a subject sample such as a botanical sample.

All lenses described in this patent application may be disposed to cover said viewing opening. Lenses may be affixed to lid 60 by snap fit, or friction fit or adhesively. Lenses forms an airtight seal between lenses and lids of various embodiments. Lenses described herein may be plano-convex lens such as Lens #90-1235 manufactured by J.P. Manufacturing. A variety of lenses may be used such as a 1×, 2×, or 3× magnifier. In an alternative embodiment, the lens is not a magnifier.

Any of the container bodies described herein may be shaped to define feet 45 as described. Any lid described herein may be shaped to define a card holder.

Tether 120 may be optionally incorporated with any embodiment container as described above.

All container bodies described herein a have an interior surface and exterior surface. All container bodies are shaped to define an open top and a bottom. All container bodies described herein are shaped to define a perimetrical ridge surrounding the open top. Further, all container bodies may be further shaped to define a mounting projection disposed on the interior of said bottom of the container bodies. In some embodiments, a container body may not be shaped to define a mounting projection, and is simply flat.

All lids described herein have an interior surface and exterior surface, wherein the lids are shaped to define a perimeter, wherein lids are shaped to define a viewing

opening. All lids described herein are further shaped to define a recessed area and shaped to define a plurality of scent openings within the recessed area.

A removable soft plug may be used with all lids described herein, and shaped to fit within the recessed area forming an airtight seal.

For any given container body shape, the perimeter of the lid will correspond to the perimetrical ridge of the container body, such that the lid is fitted on the perimetrical ridge of said container body forming a chamber. The plug forms an airtight seal between said plug and said lid completely sealing a chamber of any shaped described herein.

Although the present invention has been described with reference to the preferred embodiments, it should be understood that various modifications and variations can be easily made by those skilled in the art without departing from the scope and spirit of the invention. Accordingly, the foregoing disclosure should be interpreted as illustrative only and is not to be interpreted in a limiting sense. It is further intended that any other embodiments of the present invention that result from any changes in application or method of use or operation, which are not specified within the detailed written description or illustrations contained herein yet, are considered apparent or obvious to one skilled in the art are within the scope of the present invention. Further, it should be noted that several inventive embodiments and features are disclosed together for convenience; unless specified otherwise, all embodiment inventive options disclosed herein may be used independently from each other or cooperatively together. Use of distinct reference characters is for illustrative purposes only, and the illustrated embodiment or feature may be used either cooperatively with or distinctly from any other embodiment or feature unless specified otherwise.

What is claimed is:

1. A display container for a botanical sample, comprising:

a) an enclosure having an interior chamber for storing the botanical sample, at least a portion of the enclosure being transparent for viewing the botanical sample when in the chamber;

b) a plurality of scent ports extending through a wall of the enclosure between the interior chamber and environment;

c) a plug mounted to the enclosure and sealing the scent ports, the plug movable away from the enclosure to expose the scent ports for facilitating sampling of an aroma of the botanical sample when in the enclosure; and

d) an elongate mounting projection in the chamber for retaining the botanical sample thereon, wherein the mounting projection extends between a base portion adjacent an interior surface of the enclosure and a tip portion spaced apart from the base portion toward a center of the interior chamber, the tip portion shaped to engage and hold the botanical sample for inhibiting movement thereof.

2. The display container of claim **1**, further comprising a card holder supported by the enclosure and shaped to hold a removable identification card providing information about the botanical sample.

3. The display container of claim **2**, wherein the card holder comprises one or more projections extending from an exterior of the enclosure.

4. The display container of claim **1**, further comprising an identification card removably supported by the enclosure, the identification card providing information about the botanical sample.

5. The display container of claim **1**, wherein the enclosure comprises an integrated tether mount for affixing a security tether to the enclosure.

6. The display container of claim **1**, further comprising a security tether affixed to the enclosure.

7. The display container of claim **1**, wherein the enclosure comprises a lower portion and an upper portion detachably mounted to the lower portion, the lower and upper portions defining the interior chamber, and wherein the mounting projection projects inwardly from the lower portion.

8. The display container of claim **7**, wherein the mounting projection is integrally formed with the lower portion of the enclosure.

9. The display container of claim **1**, wherein the enclosure includes an integrated magnification lens for viewing the botanical sample when retained by the mounting projection.

10. The display container of claim **1**, wherein the plug and the scent ports are spaced horizontally apart from the tip portion of the mounting projection.

11. The display container of claim **10**, wherein the tip portion of the mounting projection is in horizontal alignment with the center of the interior chamber.

12. The display container of claim **1**, wherein the plug and the scent ports are spaced horizontally apart from the center of the interior chamber.

13. The display container of claim **1**, wherein the mounting projection extends generally vertically from the base portion to the tip portion.

14. The display container of claim **1**, wherein the enclosure has an exterior surface comprising a recessed portion, and wherein the scent ports are open to the recessed portion and the plug is nested within the recessed portion for sealing the scent ports.

15. The display container of claim **1**, wherein the enclosure has a base, a top wall opposite the base, and a sidewall extending between the base and the top wall, the base, top wall, and sidewall defining the interior chamber, and wherein the scent ports extend through the top wall and the plug is mounted against an exterior of the top wall over the scent ports.

16. The display container of claim **15**, wherein the plug is horizontally elongate and extends lengthwise between horizontally opposite sides of the top wall.

17. The display container of claim **15**, wherein the top wall has a recessed portion, and wherein the scent ports are open to the recessed portion and the plug is nested within the recessed portion for sealing the scent ports.

18. The display container of claim **15**, wherein the top wall is transparent to facilitate viewing of the botanical sample therethrough.

19. The display container of claim **15**, wherein the top wall forms at least a portion of a detachable lid of the enclosure.

20. The display container of claim **19**, wherein the lid is transparent to facilitate viewing of the botanical sample therethrough.

21. The display container of claim **15**, wherein the top wall has an integrated lens for viewing the botanical sample when retained by the mounting projection.

22. The display container of claim **21**, wherein at least a portion of the lens overlies the tip portion of the mounting projection.

23. The display container of claim **22**, wherein the plug and scent ports are spaced horizontally apart from the lens.

24. A display container for a botanical sample, comprising:

a) an enclosure having an interior chamber for storing the botanical sample, at least a portion of the enclosure being transparent for viewing the botanical sample when in the chamber;

b) a plurality of scent ports extending through a wall of the enclosure between the interior chamber and environment;

c) a plug mounted to the enclosure and sealing the scent ports, the plug movable away from the enclosure to expose the scent ports for facilitating sampling of an aroma of the botanical sample when in the enclosure; and

d) an elongate mounting projection in the chamber for retaining the botanical sample thereon, wherein the mounting projection comprises at least one spike for piercing the botanical sample.

25. A display container for a botanical sample, comprising:

a) an enclosure having an interior chamber for storing the botanical sample, at least a portion of the enclosure being transparent for viewing the botanical sample when in the chamber;

b) a plurality of scent ports extending through a wall of the enclosure between the interior chamber and environment;

c) a plug mounted to the enclosure and sealing the scent ports, the plug movable relative to the enclosure to expose the scent ports for facilitating sampling of an aroma of the botanical sample when in the enclosure; and

d) at least one elongate mounting projection in the chamber for holding the botanical sample in the interior, each mounting projection extending between a base portion adjacent an interior. surface of the enclosure and a tip portion spaced apart from the base portion away from the interior surface, each tip portion shaped to engage the botanical sample.

26. The display container of claim **25**, wherein each mounting projection extends upwardly from the base portion to the tip portion.

27. The display container of claim **25**, wherein the enclosure comprises a lower portion and an upper portion mounted to the lower portion, the lower and upper portions defining the interior chamber, and wherein at least the base portion of the mounting projection is in the lower portion of the enclosure.

28. The display container of claim **27**, wherein the scent ports are in the upper portion of the enclosure.

29. The display container of claim **27**, wherein the at least one mounting projection is integrally formed with the lower portion of the enclosure.

30. The display container of claim **25**, wherein the enclosure includes a lens positioned for viewing the botanical sample when held by the at least one mounting projection.

* * * * *