IN THE UNITED STATES DISTRICT COURT
FOR THE DISTRICT OF COLORADO

Civil Action No. 18-cv-00369-NYW

QUALITY INNOVATIVE PRODUCTS, LLC,
PLAYMONSTER, LLC,

Plaintiffs,

v.

BRAND 44, LLC,

Defendant.

ORDER ON CLAIM CONSTRUCTION

Magistrate Judge Nina Y. Wang

This matter comes before the court on the Parties' "Joint Motion for Determinatino [sic] of Claim Construction," filed December 4, 2018 ("Joint Motion for Claim Construction"). [#56]. This civil action was referred to the undersigned pursuant to the consent of all Parties. *See* [#17]; 28 U.S.C. § 636(c); Fed. R. Civ. P. 73; D.C.COLO.LCivR 72.2. Having reviewed and considered the Parties' claim construction briefs, the applicable case law, and the comments and evidence offered at the December 20, 2018 *Markman* Hearing, the court construes certain claims as set forth below.

BACKGROUND

Plaintiffs Quality Innovative Products, LLC ("QIP") and PlayMonster, LLC ("PlayMonster") (collectively, "Plaintiffs") initiated this suit for alleged patent infringement against Defendant Brand 44, LLC ("Brand 44"), asserting infringement of certain claims of three United States Patents: U.S. Patent Nos. 8,454,450 (the "'450 Patent"), issued June 4, 2013;

9,067,146 (the "'146 Patent")[1] issued June 30, 2015; and 9,415,316 (the "'316 Patent"),[2] and issued August 16, 2016 (collectively, the "Patents-in-Suit"). [#1]. The Patents-in-Suit are each entitled "Swing" and name Gregory Cordray as the inventor and QIP as the assignee. *See* [#26-2; #26-5; #26-7]. PlayMonster is the exclusive Licensee of the Patents-in-Suit. *See* [#1; #26 at ¶¶ 22, 37, 55]. According to Plaintiffs, Brand 44 manufactures, imports, uses, and/or sells the Slackers® Sky Saucer swing—a swing with a circular plastic seat suspended from a pivot with tethers to allow for swinging in several directions—which allegedly infringes several claims of the Patents-in-Suit. *See* [#26 at 7-21; #26-1 through #26-9].

The Patents-in-Suit explain that swings generally take two forms: (1) "conventional rectangular rigid swing seats . . . meant to move on an arc in a back-and-forth motion" or (2) "tire swings . . . that can twist and swing in any direction such as diagonal, circular, etc." [#26-2 at col. 1, ll. 14-21; #26-5 at col. 1, ll. 16-23; #26-7 at col. 1, ll. 18-24].[3] The inventions of the Patents-in-Suit aim to improve the "limited entertainment and enjoyment" these swings provide to "certain children and other users that are not capable of maintaining the proper position . . . and/or . . . controlling the motion of the swing in the manner intended and required." [#26-2 at col. 1, ll. 27-

[1] The '146 Patent is a continuation-in-part ("CIP") of the United States Patent Application No. 12/850,696 that matured in the '450 Patent. A CIP is "an application filed during the lifetime of an earlier nonprovisional application, repeating some substantial portion or all of the earlier nonprovisional application and adding matter not disclosed in the earlier nonprovisional application." Manual of Patent Examining Procedure ("MPEP") § 201.08 (9th ed. Jan. 2018). Therefore, the specifications of the '450 Patent and the '146 Patent overlap, but are not identical.

[2] The '316 Patent is a continuation of United States Patent Application 13/909,072 that matured in the '146 Patent. A continuation is an "application for the invention(s) disclosed in a prior- filed copending nonprovisional application, international application designating the United States, or international design application designating the United States. The disclosure presented in the continuation must not include any subject matter which would constitute new matter if submitted as an amendment to the parent application." MPEP § 201.07 (9th ed. Jan. 2018).

[3] In citing to a Patent-in-Suit, the court cites to the document number generated by the court's CM/ECF filing system but the column and line numbers assigned by the Patent.

31; #26-5 at col. 1, ll. 28-33; #26-7 at col. 1, ll. 30-34]. In addition, the inventions of the Patents-in-Suit aim to improve the "ease of manufacture, ease of installation, ease of use, durability, variety of modes of operation, safety, and other such attributes" of these two traditional swings. [#26-2 at col. 1, ll. 34-37; #26-5 at col. 1, ll. 28-40; #26-7 at col. 1, ll. 29-40]. The Patents-in-Suit allow for "swing[ing] in any direction including back-and-forth, sideways, diagonal, circular, etc. and such that the swing body can twist." [#26-2 at col. 3, ll. 9-14; #26-5 at col. 3, ll. 46-51; #26-7 at col. 3, ll. 46-col. 4, l. 67].

To achieve this utility, the Patents-in-Suit each disclose a swing that has certain structural elements, including a concave central portion that then attaches to several tethers or a tether system. *See* [#26-2 at col. 1, ll. 41 - col. 2, ll. 44; #26-5 at col. 1, ll. 44-col. 2, ll. 61; #26-7 at col. 3, ll. 46-col. 4, ll. 67]. The body of the swing includes a smooth upper surface of the body B for maximum comfort [#26-2 at col. 4, ll. 13-15; #26-5 at col. 4, ll. 50-52; #26-7 at col. 4, ll. 50-52], and a lower surface with support ribs. [#26-2 at col. 4, ll. 15-21; #26-5 at col. 4, ll. 52-59; #26-7 at col. 4, ll. 52-59].

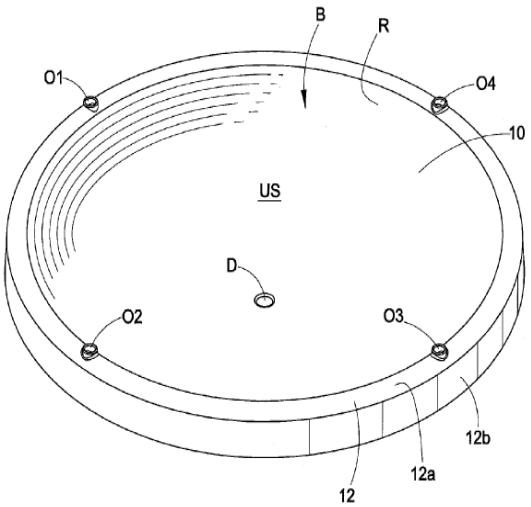

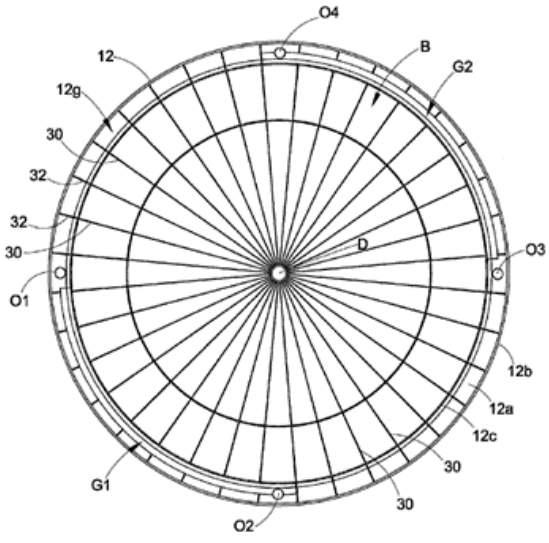

Additionally, the swing has a "peripheral edge" that accommodates other structural elements. [#26-2 at col. 3, ll. 63-col. 4, ll. 3; #26-5 at col. 4, ll. 33-40; #26-7 at col. 4, ll. 33-40]. Some preferred embodiments of the inventions are shown in the figures below:

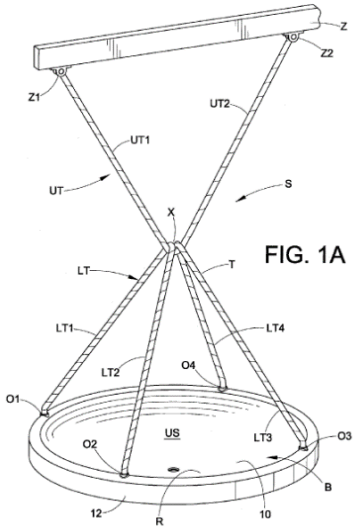

FIG. 1A

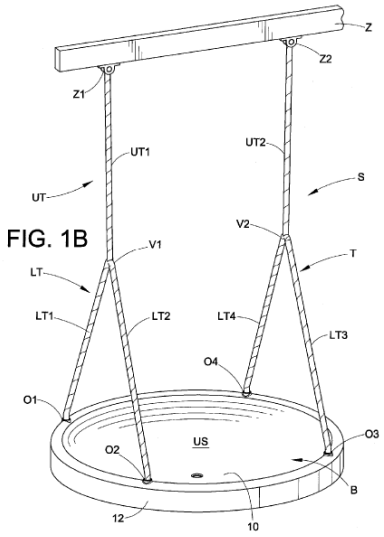

FIG. 1B

[#26-2 at Fig. 1A & Fig. 1B; #26-5 at Fig. 1A & Fig. 1B; #26-7 at Fig. 1A & Fig. 1B]. The '146 and '316 Patents contemplate swings that are non-circular in shape. [#26-5; #26-7].

Pursuant to the Scheduling Order,[4] the court set October 3, 2018 as the deadline for the Parties to submit their Joint Disputed Claims Terms Chart. *See* [#24 at 5-6]. The Parties' Joint Disputed Claim Terms Chart identifies eight disputed claim terms and/or phrases for the court to construe. *See* [#41]. During the briefing associated with claim construction, the Parties amended certain proposed constructions. *See, e.g.*, [#49 at 10 n.2; #53 at 5 n.2]. In addition to considering the Parties' claim construction briefing, *see* [#49; #53; #54], the court held a claim construction hearing on December 20, 2018, *see* [#59], at which the Parties further adjusted their claim construction proposals. Therefore, the court ordered, and the Parties filed, an Amended Joint

[4] Arguing that the Patents-in-Suit are directed at patent-ineligible subject matter under 35 U.S.C. § 101, Defendant moved to dismiss Plaintiffs' infringement claims on April 16, 2018. *See* [#21]. The court entertained oral argument on the Motion to Dismiss on September 18, 2018 [#39], and denied the Motion to Dismiss on October 4, 2018 [#44].

Disputed Claim Terms Chart on December 31, 2018. [#60]. The Parties' Joint Motion for Claim Construction is now ripe for adjudication.

LEGAL STANDARD

"[T]he construction of a patent, including terms of art within its claim, is exclusively within the province of the court." *Markman v. Westview Instruments, Inc.*, 517 U.S. 370, 372 (1996); *see also id.* at 384 ("The two elements of a simple patent case [include] construing the patent and determining whether infringement occurred . . . . The first is a question of law, to be determined by the court, [and] [t]he second is a question of fact, to be submitted to a jury." (footnote and internal quotation marks omitted; ellipsis and brackets added)). "The purpose of claim construction is to determine the meaning and scope of the patent claims asserted to be infringed." *O2 Micro Int'l Ltd. v. Beyond Innovation Tech. Co.*, 521 F.3d 1351, 1360 (Fed. Cir. 2008) (internal brackets and quotation marks omitted). "In construing patent claims, courts are guided by the precedent of the Federal Circuit." *Frac Shack Inc. v. Fuel Automation Station, LLC*, 300 F. Supp. 3d 1333, 1338 (D. Colo. 2018) (citing *SunTiger, Inc. v. Sci. Research Funding Grp.*, 189 F.3d 1327, 1333 (Fed. Cir. 1999)).

When construing the words of a claim, courts are to give those words their ordinary and customary meaning. *Phillips v. AWH Corp.*, 415 F.3d 1303, 1313 (Fed. Cir. 2005). Indeed, courts "indulge a heavy presumption that a claim term carries its ordinary and customary." *CCS Fitness, Inc. v. Brunswick Corp.*, 288 F.3d 1359, 1366 (Fed. Cir. 2002) (internal quotation marks omitted). In certain circumstances, plain and ordinary meaning will control and the court need not expressly construe the term. This is true even if the Parties disagree as to the plain and ordinary meaning, because courts determine the "plain and ordinary meaning" of a patent term not by stipulation of the parties but by what a person of ordinary skill in the art at the time of the invention would

understand the term to mean.[5] *Stryker Corp. v. Zimmer, Inc.*, 837 F.3d 1268, 1272 (Fed. Cir. 2016) (citing *Phillips*, 415 F.3d at 1313). And courts should consider this meaning "in the context of the entire patent, including the specification" of which the claims are a part. *See Trustees of Columbia Univ. in City of NY v. Symantec Corp.*, 811 F.3d 1359, 1362 (Fed. Cir. 2016). This is because the specifications provide the "best guide" as to the meaning of a disputed term, but the court will not "import limitations from the specification into the claims." *Stumbo v. Eastman Outdoors, Inc.*, 508 F.3d 1358, 1362 (Fed. Cir. 2007) (internal quotation marks omitted). Exceptions to this rule apply when (1) "a patentee sets out a definition and acts as his own lexicographer" or (2) "the patentee disavows the full scope of a claim term either in the specification or during prosecution." *Thorner v. Sony Computer Entm't Am. LLC*, 669 F.3d 1362, 1365 (Fed. Cir. 2012).

Courts may employ intrinsic as well as extrinsic evidence when construing patent claims. Intrinsic evidence includes the patent, its claims, its specifications, and, if available, its prosecution history. *See Vitronics Corp. v. Conceptronic, Inc.*, 90 F.3d 1576, 1582 (Fed. Cir. 1996). Intrinsic evidence "is the most significant source of the legally operative meaning of disputed claim language." *Dow Chem. Co. v. Sumitomo Chem. Co.*, 257 F.3d 1364, 1372 (Fed. Cir. 2001) (internal quotation marks omitted). Under certain circumstances, courts may utilize extrinsic evidence, including expert and inventor testimony, dictionaries, and treatises. *See Takeda Pharm. Co. Ltd. v. Zydus Pharm. USA, Inc.*, 743 F.3d 1359, 1363 (Fed. Cir. 2014). But "while extrinsic evidence can shed useful light on the relevant art, . . . it is less significant than the intrinsic record

[5] Although neither party defines the person of ordinary skill in the art in the respective claim construction briefing, the papers indicate that the Parties do not propose different constructions based on a disagreement over the level of skill of a person of ordinary skill in the art. Thus, the court need not define the person of ordinary skill in the art before proceeding with construing any disputed term or phrase.

in determining the legally operative meaning of claim language." *Netcraft Corp. v. eBay, Inc.*, 549 F.3d 1394, 1397 (Fed. Cir. 2008) (internal quotation marks omitted; ellipsis added).

Finally, a court construes claims without regard to the accused device. *See Optical Disc. Corp v. Del Mar Avionics*, 208 F.3d 1324, 1333 (Fed. Cir. 2000). Accordingly, to the extent that the Parties argue about whether certain elements of the invention are found within the accused device, *see e.g.* [#49 at 1; #53 at 10], this court disregards such arguments.

ANALYSIS

The Parties identify eight claim terms and/or phrases for this court to construe. These include: (1) "peripheral groove"; (2) "top wall"; (3) "concave"; (4) "lower surface"; (5) "tether"; (6) "extends radially outward" or "extends outwardly" or "extend . . . radially outward"; (7) "peripheral edge"; and (8) "an inner end." *See* [#49; #53; #54, #60].[6] The court construes the disputed terms and/or phrases as follows.

I. "Peripheral Groove"

The term "peripheral groove" appears in asserted claim 22 of the '450 Patent and asserted claims 1 and 18 in the '146 Patent. The Parties do not dispute that "peripheral" refers to the periphery of the concave seat portion of the swing. *See* [#49 at 13 ("In the context of the Patents-in-Suit, the meaning of 'groove' is an area around the circumference of the swing seat . . .") (emphasis added)]. *See also* [#26-2 at col. 1, ll. 41-43 ("In accordance with one aspect of the present development, a swing includes a body including a concave central portion defining a recessed seat and a peripheral edge surrounding the concave central portion") (emphasis added)]. But the Parties do vigorously contest whether "groove" requires open regions free from support ribs.

[6] The court follows the order of the terms/phrases as listed in Brand 44's opening claim construction brief.

Brand 44 proposes that the court construe "peripheral groove" to mean "a space extending around the circumference of a swing that is bounded by 1) inner and outer walls on each side and 2) a top wall containing tether openings. The space contains at least two open regions free of peripheral edge support between tether openings allowing a rope/chain/member to extend circumferentially in the peripheral groove."[7] [#60 at 2]. Brand 44 contends that the dictionary definition of "groove" is a "long narrow channel," and in the context of the Patents-in-Suit a "peripheral groove" is then a "channel, i.e., open space, extending along the circumference of the swing." [#49 at 11]. Brand 44 continues that "peripheral groove" cannot simply mean a groove surrounding the periphery of the concave portion as Plaintiff suggests, because the specifications and claims make clear that an inner and outer wall and a top wall containing tether openings bound the peripheral groove **12***g*, which also has two open regions G**1**, G**2** free of peripheral support ribs **32** between the tether openings O**1**-O**4**. *See* [*id.* at 13-15].

Plaintiffs counter that "peripheral groove" requires no construction, and the court should give it its plain and ordinary meaning. [#60 at 2]. In the alternative to no construction, Plaintiffs argue that the court should construe the term as "a groove that surrounds the concave central portion of the body of the swing" or, in other words, "a groove that surrounds the periphery of the concave central portion[.]" [#53 at 5]. Plaintiffs concede that "one general definition of the word 'groove'" means a "long narrow channel or depression" but argue that no definition of "groove" requires it to be an "open space" throughout, and the Patents-in-Suit contemplate that the peripheral groove **12***g* will have peripheral support ribs **32** prohibiting an open space. *See* [*id.* at

[7] Originally, Brand 44 proposed "peripheral groove" to mean "the outermost structure of the swing comprised of inner and outer walls and distinct top wall (which includes tether openings) which together create a peripheral groove." [#41 at 3]. By the time the claim construction briefing started, Defendant had amended its proposed construction of "peripheral groove." *See, e.g.*, [#49 at 10 & n.2].

7-8]. Plaintiffs further argue that Brand 44 attempts to improperly read specification limitations into the claims by requiring the peripheral groove **12***g* to have two open regions G**1**, G**2**. They contend that claim differentiation demonstrates that peripheral groove **12***g* does not require two open regions G**1**, G**2** because claims 13 and 14 of '450 Patent progressively limit the scope of claim 12, which like claim 22, is silent as to the two open regions G**1**, G**2**. *See* [*id.* at 9-10]. Relatedly, Plaintiffs assert that Brand 44 improperly reads limitations into the claims and renders express limitations superfluous because the claims refer to a peripheral groove defined adjacent the top wall and outer wall, *e.g.*, [#26-2 at col. 7, ll. 16-17; #26-5 at col. 8, ll. 1-2, col. 8, ll. 53-54]; thus, the court does not need to include these limitations again in the definition of peripheral groove itself, *see* [#53 at 10-11].

As discussed above, the Parties agree that the "peripheral groove" is a space surrounding the circumference of the concave seat portion of the swing. But given the manner in which the peripheral groove is defined in the specifications of the Patents-in-Suit and depicted in the figures, the point of reference is more properly to the swing body rather than to the concave seat portion. As the specifications disclose, the peripheral groove is a space that may be defined by different structural elements, e.g., between the inner and outer circular walls, *e.g.*, [#26-2 at col. 2, ll. 21-24], or adjacent the top wall and outer wall, *e.g.*, [#26-5 at col. 1, ll. 59-62], or adjacent to the top wall, between the top wall, outer wall, and lower surface, *e.g.*, [*id.* at col. 6, ll. 29-33]. These elements refer to the swing body itself, not the concave seat portion.

Because the swing body is the frame of reference, the court concludes that the term "circumference" may suggest that the swing body must be circular. But the specification of the '146 Patent makes clear that the shape of the swing body may include other non-circular shapes like an oval, [#26-5 at Fig. 14], or non-rectangular shapes such as a trapezoid, pentagon, hexagon,

or octagon, [*id.* at col. 6, ll. 15-23]. And as acknowledged by Plaintiffs, the plain and ordinary meaning of periphery includes "the perimeter of a circle or other closed curve; the perimeter of a polygon; [or] the external boundary or surface of a body." [#60 at 3]. Similarly, Defendant argues that "peripheral" is "something along the perimeter of a surface." [#49 at 35]. Therefore, this court finds that reference to a perimeter, rather than a circumference, is more appropriate. *See Omega Eng'g, Inc, v. Raytek Corp*., 334 F.3d 1314, 1334 (Fed. Cir. 2003) ("[W]e presume, unless otherwise compelled, that the same claim term in the same patent or related patents carries the same construed meaning").

In addition, the respective specifications of the Patents-in-Suit indicate that in various embodiments the groove must have sufficient space to accommodate a tether opening and tether, *see* [#26-2 at col. 2, ll. 20-24], or include two open spaces, *see* [*id.* at col. 2, ll. 27-34], or to house part of the tether system, *see* [#26-5 at col. 1, ll. 62-65], or to accommodate a reinforcement ring, *see* [*id.* at col. 7, ll. 36-39]. But the peripheral groove is not necessarily defined by any or all of these elements. Rather, the claims set forth other limitations that impact the "peripheral groove," e.g., that the peripheral groove includes a tether opening. *See* [#26-2 at cl. 1]. To the extent that Brand 44 seeks to define "peripheral groove" with specific additional structures, the court respectfully declines to do so. Indeed, to require the peripheral groove to necessarily include "space free of peripheral edge support between tether openings" would run contrary to the portion of the specification and Fig. 1A which disclose that "[t]he lower tethers can be defined from multiple lengths of rope or chain or other flexible materials," and "Fig 1A shows an arrangement in which the respect [sic] lower ends of the lower tethers LT**1**-LT**4** are <u>each</u> connected to the swing body B," *see, e.g.*, [*id.* at col. 3, ll. 22-24 (emphasis added); Fig. 1A], which renders any open space between tethers unnecessary.

And while Plaintiffs are correct that the channel need not be continuously open all the way around the circumference, they concede that the plain and ordinary meaning of the term "groove" connotes a channel. [#53]. That channel, labelled as **12***g* in Figures 4, 5, and 6, is not simply the segment of space bounded by the outer wall, inner wall, and two radial ribs as suggested by Plaintiff. [#53 at 7]. Rather, it is the entirety of the channel surrounding the perimeter of the swing, which support ribs may intersect at some points or may encompass a distinct open space to allow for the tether system, as highlighted below:

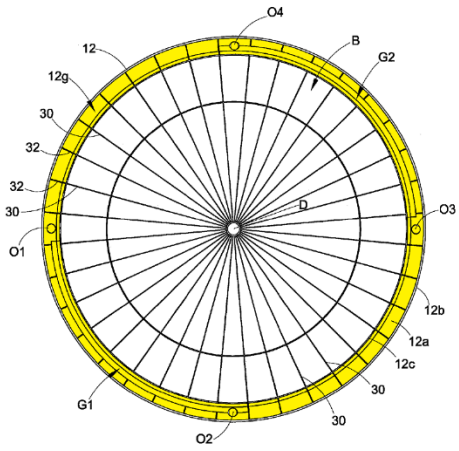

[#26-2 at Fig. 4].

To hold otherwise would be to narrow the plain and ordinary meaning of groove without any support to do so in the specification or asserted claims. Accordingly, this court construes "peripheral groove" as "a channel extending around the perimeter of the swing body."

II. "Top Wall"

The term "top wall" appears in asserted claim 22 of the '450 Patent, asserted claims 1 and 18 of the '146 Patent, and asserted claims 3 and 5 of the '316 Patent. Brand 44 proposes that the court construe "top wall" to mean "a surface extending outward that houses the tether openings and is distinct from both the seat recess and outer wall." [#49 at 15]. Brand 44 contends that the

court must construe the term, because the definition of "wall," a "vertical structure that provides shelter or security," has no application to a swing, and the word "top" is ambiguous without a frame of reference because swings move. *See* [*id.* at 15-17]. According to Brand 44, the Patents-in-Suit make clear that the top wall **12***a* houses the tether openings and is distinct from the concaved seat and outer wall, because the top wall **12***a* extends from the seat and the outer wall extends downwardly from the top wall **12***a*. *See* [*id.* at 17-18].

Plaintiffs contend that "top wall" needs no construction, as the court should give "top wall" its "plain and ordinary meaning, i.e., a wall on top of something, which in this case is the peripheral edge." [#53 at 11]. But should the court need to construe "top wall," Plaintiffs propose the definition of "a surface that makes up the top of the peripheral edge." [*Id.*]. Plaintiffs argue that an ordinary artisan would "easily understand the plain and ordinary meaning of 'top wall' after reading the relevant sections of the written description and viewing the figures from the '450 Patent," and would "understand the frame of reference for the 'top wall.'" [*Id.* at 13]. Regarding the inclusion of "hous[ing] the tether openings," Plaintiffs argue that Brand 44 is attempting to improperly read limitations from the specification into the claims.

Defendant's argument regarding the frame of reference is not persuasive; the other limitations provide the necessary orientation of the "top wall" to the concave seat portion of the swing as well as the outer wall. The specifications of the Patents-in-Suit and asserted claims disclose that the "top wall" is a portion of the peripheral edge that extends in some manner from the concave seat portion. *See, e.g.*, [#26-2 at cl. 22; #26-5 at Abstract, cl. 1; #26-7 at cl. 5]. The claims disclose the orientation of the extension, i.e., whether "radially outward" or simply "outward." Additional claim language further defines the other features of the "top wall," e.g., the tether openings, so that the construction of "top wall" itself need not absorb those elements. After

reviewing the specifications and claims of the Patents-in-Suit, this court concludes that "top wall" needs no construction.

III. "Concave"

The term "concave" appears in asserted claim 22 in the '450 Patent, asserted claims 1 and 18 in the '146 Patent, and asserted claims 1 and 5 of the '316 Patent. Plaintiff argues that the term "concave" requires no construction, as the court should give it its plain and ordinary meaning. [#53 at 15-16; #60 at 4-5]. Alternatively, Plaintiffs argue that if a construction is necessary, the court should construe "concave" as "hollowed or rounded inward." [*Id.*]. Defendant contends that the court must construe the term as "hollowed or rounded like a bowl." [#60 at 4-5].[8]

The Patents-in-Suit use "concave" to describe a central seat portion of the body of the swing. *See, e.g.*, [#26-2 at col. 1, ll. 41-44, col. 4, ll. 6-8]. While Brand 44 suggests that "Plaintiffs' proposed construction must be rejected because it contains an additional clause—'or rounded inward'—that makes [it] both inaccurate and confusing" because "it [has] an ambiguous frame of reference," [#49 at 20], this court respectfully disagrees. As an initial matter, there is no ambiguity in which direction the concave central seat portion must curve. The function of the concave central seat portion is to hold the user of the swing and to allow for drainage of water or debris through a drain opening. [#26-2 at col. 3, ll. 54-57, col. 4, ll. 6-8, 13-15]. To facilitate those functions, the central seat portion must curve toward the ground when the swing is at rest. Indeed, Figures of the Patents-in-Suit (specifically, Figures 5 and 6), individually and taken together, reflect the direction of the curve of the concave central seat portion. *See, e.g.*, [*id.* at Figs. 1A, 1B, Fig. 2, Fig. 3, F. 5, Fig. 6, Fig. 7, Fig. 9]. A review of the entire specification reveals that the use of "concave" is consistent throughout.

[8] Originally, Defendant argued that the court should construe "concave" as "a structure that curves, resulting in a recessed and cupped space." [#41 at 9; #49 at 20-21; #54 at 7-8].

The Parties do not argue that the patentee acted as his own lexicographer to define concave, nor do they contend that the plain and ordinary meaning of concave was disclaimed during the prosecution of the Patents-in-Suit. And this court's own review of the prosecution history of the '450 Patent, which Defendant cites as evidence in its proposed claim construction, [#60 at 5], does not reveal any definition of "concave" alternative to its plain and ordinary meaning. Indeed, in the Non-Final Rejection dated August 15, 2012, the Patent Examiner found the invention obvious based on U.S. Patent No. 3,937,463 ("Soisson") considering U.S. Patent No. 5,149,117 ("Wilkens, Sr."). *See* [Ex. 1].[9] In distinguishing the invention of the '450 Patent in its Response to the Office Action dated January 15, 2013, the patentee argued that Soisson, entitled "Congruent Suspension Twist Swing," was flat, and while conceding that Wilkens, Sr. disclosed a concave seat, it failed to disclose the tether contemplated by the '450 Patent:

> Also, as noted by the Examiner, the disc seat of Soisson is flat and does not include a "concave central portion" as recited in claim 1. The Examiner cites to Wilkens as disclosing this structure, but the applicant respectfully notes that Wilkens is a saucer type device that is not disclosed or fairly suggested as being suitable for being suspended by a tether system connected to a peripheral edge of the saucer. In fact, Wilkens teaches away from connecting a tether directly to the concave saucer, because the tether of Soisson is connected to the central post that projects from the center of the saucer.

[Ex. 2, at 8-9 (emphasis added)].

The concave saucer of Wilkens, Sr. is depicted as follows:

[9] Although Defendant refers to the prosecution history of the '450 Patent as support for its proposed construction of the term "concave," it did not provide the court with a copy of that history. *See* [#60 at 5]. The court takes judicial notice of the filings found on the United States Patent Office website because they are "a matter of public record." *See Tal v. Hogan*, 453 F.3d 1244, 1264 n.24 (10th Cir. 2006).

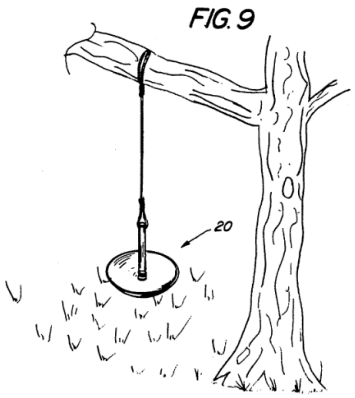

There is no indication of an alternative meaning for "concave" as it relates to Wilkens, Sr. or to the invention of the Patents-in-Suit. The Examiner ultimately allowed the claims, and the '450 Patent was issued without any further discussion regarding the shape of the seat of the swing. Accordingly, this court finds that "concave" requires no construction, and gives it its plain and ordinary meaning.

IV. "Lower Surface"

The term "lower surface" appears in asserted claims 1, 5, and 10 of the '316 Patent. Plaintiffs again argue that the term needs no construction, as the court should give the term its plain and ordinary meaning. [#53 at 20-22]. In the alternative, Plaintiffs argue that the court should construe the phrase as "the surface on the bottom of the seat portion." [*Id.*; #60 at 5]. Defendant contends that "lower surface" must be construed as "the surface opposite the concave seat."[10] Brand 44 argues that this construction is necessary because, otherwise, there is ambiguity with Plaintiffs' proposed construction, including the term "bottom," depending upon the orientation of the claimed invention. [#49 at 24-25]. The court begins again with the language of the claims and specifications of the Patents-in-Suit.

[10] Originally, Brand 44 argued that the court had to construe "lower surface" as "on a concave structure, the surface opposite the recessed and cupped space." [#49 at 22].

The Patents-in-Suit describe an invention that is a swing with "an upper surface" of a seat and a "lower surface of the seat" that includes a plurality of ribs. *See, e.g.*, [#26-7 at col. 2, ll. 22-24]. The specification also uses the adjective "opposite" to describe the lower surface's relationship with the concave seat portion. [*Id.* at col. 4, ll. 52-55 ("The opposite lower surface LS of the concave central seat portion **10** comprises a plurality of seat support ribs **30** extending or projecting therefrom, or the ribs **30** can be omitted.")]. The specification of the Patents-in-Suit identifies the "upper surface" with the letters "US" as in Figures 1A, 1B, 2, 3, 6, and 11. On the other side of the upper surface is the "lower surface," depicted in the "bottom view" of the swing. [*Id.* at col. 3, l. 7, Fig. 4]. The "lower surface" is marked with "LS" in Figures 6 and 10A of the '316 Patent.

Despite the Parties' arguments, there does not appear to be a material dispute as to what portion of the invention constitutes the "lower surface." Rather, the real dispute between the Parties appears to be whether a prior art reference discloses the limitation of "lower surface." *Compare* [#49 at 22-23] *with* [#53 at 21-22]. But this court must construe the disputed terms and phrases of the Patents-in-Suit without regard to potential prior art unless such references were part of the prosecution of the patent itself. Though the patentee appears to use both "opposite" and "bottom," this court finds that "opposite" is more precise. Accordingly, the court adopts Defendant's proposed construction of "lower surface" as the "surface opposite the concave seat."

V. "Tether"

The term "tether" appears in asserted claim 22 of the '450 Patent, asserted claims 1 and 18 of the '146 Patent, and asserted claims 1, 2, 4, 5, and 10 of the '316 Patent. Plaintiff contends that the term requires no construction but, if it does, the court should construe it as "a single length or multiple separate lengths of rope, chain, or other flexible material for suspending a structure."

[#53 at 22-24; #60 at 6]. Defendant argues that while the Parties "agree that the purpose of a 'tether' is to suspend a swing," the Parties' dispute what constitutes the plain and ordinary meaning of "tether," and thus the court must construe it. [#49 at 26]. Brand 44 proffers that "tether" means "an attachment, composed of a single or multiple components, that suspends the swing body from a support member." [#60 at 6]. According to Defendant, "the parties disagree as to whether a tether must be "a [single] length of material or, instead, can be made up of multiple components." [#49 at 26].

Turning to the substantive issue before the court as to "tether," the main disagreement identified by Defendant (i.e., whether a "tether" means a single length of material or, instead, can be made up of multiple components) has shifted. Originally, Plaintiffs argued that the court should construe "tether" as a length of rope, chain or other flexible material for suspending a structure." [#53 at 22-23; # #41 at 2]. But now, Plaintiffs appear to concede that their initial proposed construction conflicts with the portion of the specifications of the Patents-in-Suit that provide:

> The lower tethers LT**1**-LT**4** can be defined from a single length or multiple separate lengths of rope or chain or other flexible member(s), and the upper tethers UT**l**, UT**2** can likewise be defined from a single length or two separate lengths of rope or chain or other flexible member(s).

See, e.g., [#26-2 at col. 3, ll. 17-21]. In the Amended Joint Disputed Claim Terms Chart, Plaintiffs continue to advocate that the court can simply rely upon the plain and ordinary meaning of "tether" and leave the term unconstrued but, in the alternative, the court could construe the term to mean "a single length or multiple separate lengths of rope, chair, or other flexible material for suspending a structure." [#60 at 6 (emphasis added)].

The court finds that construction of "tether" is appropriate, because though the term is singular in form, the specification makes clear that a "tether" may encompass a single or multiple lengths of rope, chain, or flexible members. But the court is unpersuaded that simply because "the

specifications of the Patents-in-Suit note that a 'tether' may be a chain, the term must also include the material necessary to attach it to the swing, such as hardware." [#49 at 29]. Indeed, the specifications of the Patents-in-Suit make a distinction between a "tether" and a "tether system"; the specifications do not use these terms interchangeably. Rather, a "tether" is a distinct part of a "tether system," which is not a phrase that any party seeks to construe. *See, e.g.*, [#26-2 at col. 3, ll. 14-34]. Perhaps hardware could be an unclaimed element of the "tether system," but nothing in the intrinsic record or prosecution history of the Patents-in-Suit suggests that a person of ordinary skill in the art would understand tether to be broad enough to include components that are not lengths of rope, chain, or other flexible members. [#49 at 27-29]. Nor is the court persuaded by Defendant's argument during the claim construction hearing that a tether opening could not accommodate a chain without hardware, and therefore hardware must necessarily be included in the construction of "tether." Defendant cites no authority for such a conclusion, either factually or legally.

Therefore, the court adopts Plaintiffs' proposed amended construction of "tether" that mirrors that of the specifications of the Patents-in-Suit: "a single length or multiple separate lengths of rope, chain, or other flexible material for suspending a structure."

VI. "Extends Radially Outward" "Extend . . . Radially Outward" "Extends Outwardly"

The phrase "extends radially outward" appears in asserted claim 22 of the '450 Patent and claims 1 and 18 of the '146 Patent. The phrase "extend [from an inner end] radially outward" appears in asserted claim 10 of the '316 Patent. The phrase "extends outwardly" appears in asserted claim 5 of the '316 Patent. Though the Parties group these three related phrases together for the purposes of construction, the proposed construction between the phrases differs slightly.

As with the other terms, Plaintiffs argue that the court need not construe any of these phrases, but rather rely upon their respective plain and ordinary meanings.

Phrases Including "Radially." Should the court determine construction is necessary, Plaintiffs urge the court to adopt "extends away from the center toward the outside" for "extends radially outward" and "extend [] radially outward." [#53 at 27-29; #60 at 7-8]. Defendant argues that the phrases require construction, and that Plaintiffs' proposed construction reads the term "radially" out of each phrase. [#49 at 31-33; #54 at 10-11]. The Parties further dispute whether the term "extends" requires any type of distance as part of the construction. Brand 44 thus contends that the court should construe these phrases as "situated following the radius of a circle for an extended distance." [#49 at 30-33; #54 at 10-11; #60 at 7].

The court first considers whether the term "extend" requires an extension of any length as Brand 44 suggests. In reading the specification and the claims of the Patents-in-Suit, the court concludes that no construction of the term "extends" is required. The plain and ordinary meaning of the term "extends" connotes some undefined length and nothing in either the specification or claims of the Patents-in-Suit suggests any required length of extension, *de minimis* or otherwise. Accordingly, this court finds that neither the intrinsic nor extrinsic evidence supports construing "extend" to add a limitation regarding length.

Nevertheless, it does appear appropriate to construe "radially" to avoid any further dispute as to its meaning at later stages of this action. A review of the specifications of the Patents-in-Suit does not suggest that the patentee acted as his own lexicographer to assign a unique meaning to the term "radially." But neither proposed construction appears to be appropriate. The court begins with the plain and ordinary meaning of "radius," from which the adverb "radially" derives. A radius extends from the center to any point on the circumference of a circle or ellipse; from the

center to any point of the surface of a sphere; or from the center of a regular polygon to its vertices. *See* RADIUS, American Heritage Dictionary, https://www.ahdictionary.com/word/search.html?q=radius. Thus, contrary to Defendant's proposal, a "radius," and thus "radially," is not limited to a circle, either in its plain and ordinary meaning or by the specification and claims of the Patents-in-Suit. The shared specifications of the Patents-in-Suit make clear that in "one embodiment" of the invention, the body of the swing is circular. [#26-2 at col. 3, ll. 57-59]. But the specification of the '146 Patent—a CIP of the '450 Patent and shared by the '316 Patent—and the claims of the '146 Patent go on to explain that the body of the swing may take shapes other than a circle. *See, e.g.*, [#26-5 at cls. 6-14]. Therefore, there is no basis for limiting the phrase contain "radially" to a circle. *See Omega Eng'g,* 334 F.3d at 1334.

Though Plaintiffs' proffered construction is closer, the use of "toward the outside" is unnecessary and invites ambiguity. The specification explains that the outward extension is toward the peripheral edge, and it consistently depicts this like a spoke of a wheel. *See, e.g.*, [#26-2 at col. 4, ll. 18-21, Fig. 4]. Though the patentee qualifies this description as part of the "illustrated embodiment," this court interprets that qualifier as referring to the precise positioning and length of the radial rib, i.e., from an inner end located adjacent to the drain opening to an outer end located adjacent to the peripheral edge, rather than qualifying the term "radially." As a result, this court construes "extends radially outward" and "extend [] radially outward" as "extends from the center of the seat portion toward the peripheral edge." This construction is consistent with the plain and ordinary meaning of a radius as well as the intrinsic evidence.

Extends Outwardly. In asserted claim 5 of the '316 Patent, the term "radially" is omitted from the phrase "extends outwardly." Plaintiffs again advocate for the court to find that no

construction is necessary, as the court should give the phrase its plain and ordinary meaning. [#53 at 26-27; #60 at 7]. Brand 44 disagrees, arguing that "extends outwardly" means "following a path away from the center for an extended distance." [#49 at 33, #60 at 7; #54 at 10-11]. For the reasons set forth above, this court declines to construe this phrase to include a limitation of length, i.e., "extended distance," that neither the specification nor the plain and ordinary meaning of the words support. The court concludes that no construction is necessary for the phrase "extends outwardly."

VII. "Peripheral Edge"

The term "peripheral edge" appears in asserted claim 22 of the '450 Patent, asserted claims 1 and 18 of the '146 Patent, and asserted claims 1, 2, 3, 5, 6, 10, and 11 of the '316 Patent. Plaintiffs contend that the court need not construe the term, and should give it its plain and ordinary meaning, i.e., an edge along the periphery of the body. [#53 at 31]. In the alternative, Plaintiffs urge the court to interpret "peripheral edge" to mean "a portion of the body that surrounds the concave portion." [#53 at 31-33; #60 at 9]. Brand 44 disagrees, arguing that the court must construe "peripheral edge" to be "the outermost structure of the swing comprised of inner and outer walls and a distinct top wall (which includes tether openings) which together create a peripheral groove," because "the inventor of the Patents-in-Suit set forth his own definition of the word in the patent." [#49 at 33-35].

Outermost. One area of dispute between the Parties appears to focus on whether the "peripheral edge" must be the outermost portion of the swing body or whether it must only surround the concave portion of the swing. *Compare* [#49 at 35; #54 at 11-12] *with* [#53 at 33]. The only use of the term "outermost" in the Patents-in-Suit refers to the "outermost edge of the seat recess," not the outermost portion of the swing body. [#26-2 at col. 4, ll. 24-26; #26-5 at col.

6, ll. 24-29]. This court observes that Plaintiffs' proffered plain and ordinary meaning of "peripheral edge" as "an edge along the periphery of the body," [#53 at 32], appears more consistent with Brand 44's proposed construction that requires the "peripheral edge" to be the "outermost structure of the swing" than its own alternative construction of "a portion of the body that surrounds the concave portion."

As discussed above with respect to peripheral groove, the Parties agree that the terms "peripheral" and "periphery" refer to the perimeter of an object. *See supra*, § I. In turn, Plaintiffs' own extrinsic evidence indicates that "perimeter" refers to "outer limits." [#60 at 10]. Similarly, Plaintiffs concede that the plain and ordinary meaning of the term "edge" refers to a border. [*Id.* at 9]. A review of the specifications of the Patents-in Suit indicates that the "peripheral edge" is best understood to be in relation to the body of the swing (like peripheral groove), not the concave seat portion. *See, e.g.*, [#26-2 at Abstract ("The peripheral edge <u>of the body</u> is circular such that <u>the body</u> defines a circular disk") (emphasis added); #26-5 at Abstract ("The peripheral edge <u>of the body</u> can be circular, a non-rectangular polygon, or an oval or other non-circular curved shape." (emphasis added))].

Structural Elements. The other significant area of dispute between the Parties is whether the construction of "peripheral edge" necessarily requires the inclusion of certain structural elements. Brand 44 argues that the patentee acted as his own lexicographer and defined "peripheral edge" as necessarily including "inner and outer walls and a distinct top wall (which includes tether openings) which together create a peripheral groove" based on the use of the term "comprised of." This court respectfully disagrees.

First, Brand 44 fails to provide the court any authority to conclude that "[t]he patent specifications' word 'comprise' means that these structures are mandatory, and leaves no room for

fewer features." [#49 at 34; #54 at 11]. Defendant's reliance on *Trading Tech. Int'l, Inc. v. eSpeed, Inc.*, 595 F.3d 130, 1343 (Fed. Cir. 2010) is inapposite. There the United States Court of Appeals for the Federal Circuit ("Federal Circuit") did not discuss the meaning of "comprised of." Rather, at that pinpoint citation the Federal Circuit discussed the court's claim construction, including the impact of the patentee's reference to "this present invention." *Id.* at 1343.

Here, the Summary of the Invention in the specifications of the Patents-in-Suit do indicate that "the present development" or, in other words, "the present invention," requires a peripheral edge. But it does not require that the peripheral edge be limited to the structural elements that Brand 44 proffers. Rather, the Federal Circuit has held that "comprise," "comprising," and "comprised of," are all open-ended terms, and that when used as a transition phrase, "the usual and generally consistent meaning of 'comprised of'" indicates that "the ensuing elements or steps are not limiting." *CIAS, Inc. v. All. Gaming Corp.*, 504 F.3d 1356, 1360 (Fed. Cir. 2007). As noted by Plaintiffs, the asserted claims further define what additional limitations are associated with the peripheral edge, such as a plurality of tether openings, a top wall, outer wall, and a peripheral groove, *see* [#26-2 at cl. 22; #26-5 at cl. 1], or just tether openings, *see* [#26-7 at cl. 1], or tether openings, a top wall, and outer wall, but no peripheral groove, *see* [*id.* at cl. 3]. Accordingly, this court construes "peripheral edge" to mean "an edge extending around the perimeter of the swing body."

VIII. "An Inner End"

The phrase "an inner end" is used in asserted claims 1, 5, and 10 of the '316 Patent. Plaintiffs argue that no construction is required, as the court should give the phrase its plain and ordinary meaning or, alternatively, the court should construe it as "the end of each seat support rib located furthest from the peripheral edge." [#53 at 33-34; #60 at 10-11]. Brand 44 argues that the

court must construe "an inner end" because Plaintiffs disavowed the plain and ordinary meaning of the term during the prosecution of the '316 Patent. [#49 at 36-37]. Defendant therefore contends that the court should construe "an inner end" as "a point in the interior of the swing seat adjacent to a drain opening." [*Id.* at 37-38; #60 at 10-11]. Plaintiffs dispute Defendant's prosecution history argument, arguing that although the "inner end" is near the draining opening in one embodiment of the invention of the '316 Patent, the limitation of "next to the drain opening" should not be part of the construction of the term. [#53 at 34-36].

It is axiomatic that there is a "heavy presumption" that claim terms carry their full plain and ordinary meaning unless "the patentee unequivocally imparted a novel meaning to those terms or expressly relinquished claim scope during prosecution [of the patent]." *See Omega Eng'g, Inc.*, 334 F.3d at 1323. Therefore, this court begins by reviewing the claims and the specification of the '316 Patent to determine what a person of ordinary skill in the art would understand "an inner end" to mean and whether the patentee acted as his own lexicographer in the specification or claims to alter the plain and ordinary meaning.

As an initial matter, this court concludes that the patentee uses "an inner end" not to refer to an absolute point but to a relative location. *See, e.g.*, [#26-7 at col. 2, ll. 26-29, col. 2, ll. 33-43]. In contrast to Plaintiffs' proposed construction, the phrase "an inner end" does not appear limited to support ribs, such that a construction of the term should necessarily include reference to support ribs. Rather, in the specification, the patentee also refers to "an inner end" of a top wall. *See* [*id.* at col. 2, ll. 37]. In reading the claims and specification of the '316 Patent, this court concludes that "an inner end" is a relative position of a particular structural element, rather than a specific structural element itself, and simply refers to the end of the structural element (in this instance, a support rib) that is more toward the center of the disclosed swing body. *See, e.g.*, [#26-

7 at cl. 1]. Similarly, "an inner end" of a top wall simply refers to the edge of a top wall that is more toward the center of the disclosed swing body than the other edge. [*Id.* at col. 2, ll. 37-41]. This understanding is consistent with the plain and ordinary meaning of "inner," as "situated further in," or "nearing a center." *See* INNER, Merriam-Webster Dictionary, https://www.merriam-webster.com/dictionary/inner. The remainder of the words of the asserted claims 1, 5, and 10 further disclose the structural element (i.e., the seat support rib) and the positioning of seat support ribs, i.e., that the ribs extend "radially outward" from an inner end, that the extension of a rib is "toward said circular peripheral edge," and that the ribs are "oriented normal to said lower surface of said seat." [#26-7 at cl. 1].

Having discerned this meaning of "an inner end," the court now looks to the file history of the '316 Patent to determine whether the patentee disavowed this claim scope during the prosecution of the patent. On November 3, 2015, the Patent Examiner issued a Non-Final Office Action, finding that "it is inherent that the seat of Soisson modified by the support ribs of Marmentini[11] would produce the support ribs patterns as claimed." [Ex. 3 at 3]. In response, the patentee amended certain claims, including claim 1, to include a limitation stating, "said seat support ribs extending radially outward from an inner end toward said circular peripheral edge, and said seat support ribs oriented normal to said lower surface of said seat." [#49-6]. The patentee further explained that "[t]he applicant and undersigned have carefully studied the Soisson, Wilkens, and Marmentini documents cited by the Examiner, and respectfully submit that the cited documents do not disclose or fairly suggest the structure recited in amended claim 1, including the seat support ribs that extend radially outward from an inner end toward the circular peripheral edge of the body." [*Id.* at 6]. The "ribbed feet" in Marmentini appear to run parallel to each other, on

[11] "Marmentini" refers to United States Patent No. 7,175,535 entitled "Portable Playground Swing Seat," which names Peter A. Marmentini as inventor.

each side of the seat bottom, in a non-radial fashion, and the specification and claims of that patent do not discuss the relative location of the ends of the ribbed feet. [Ex. 4 at Figs. 2, 6, and 11].

The "standard for disavowal is exacting, requiring clear and unequivocal evidence that the claimed invention includes or does not include a particular feature. Ambiguous language cannot support disavowal." *Poly-Am., L.P. v. API Indus., Inc.*, 839 F.3d 1131, 1137 (Fed. Cir. 2016). Nothing in the exchange between the Examiner and the patentee persuades this court that there was a clear relinquishment of any scope of the plain and ordinary meaning of "inner end" such that the inner end necessarily must be "adjacent to a drain opening" as Defendant contends. Accordingly, the court construes "an inner end" as "the end that is more toward the center of the seat body."

CONCLUSION

For the reasons stated herein, the court construes the claims at issue as set forth above.

DATED: February 14, 2019

BY THE COURT:

Nina Y. Wang
United States Magistrate Judge