4. Enter an order requiring the Defendant to file with the Court and to serve on Plaintiff's counsel, within thirty (30) days after service of any preliminary injunction or permanent injunction issued here, or within such reasonable time as the Court shall direct, a report in writing and under oath setting forth in detail the manner and form in which the Defendant had complied with the injunction;

5. Order an accounting of profits and other damages derived from the Defendant from its acts of patent infringement, trade dress infringement, slogan infringement, copyright infringement, deceptive trade practices, unfair competition, and unjust enrichment.

6. Enter a judgment in favor of Plaintiff and against the Defendant in an amount to be set forth when determined as an appropriate monetary award, the amount to include (i) actual losses suffered by the Plaintiff due to Defendant's actions of patent infringement or a reasonable royalty determined by the court, whichever is greater, (ii) actual losses suffered by Plaintiff due to Defendant's actions; (iii) profits the Plaintiff has lost or will lose due to Defendant's actions and infringement, (iv) profits and advantages obtained by Defendant by its actions and infringement; (v) treble damages pursuant to 35 U.S.C. §284 and C.R.S. § 6-1-113; and (vi) reasonable attorneys fees pursuant to 17 U.S.C. §505, 15 U.S.C.§1117, 35 U.S.C. §285, and C.R.S. §6-1-113.

7. Award Plaintiff costs and such further relief as the Court deems necessary and proper.

JURY DEMAND

Plaintiff Predator hereby demands a trial by jury for all issues so triable.

SIGNED this 27th day of April, 2009.

COGSWELL LAW OFFICES, P.C.

John M. Cogswell
415 East Main Street
PO Box 5266
Buena Vista, CO 81211
Telephone: (719) 395-4900
Facsimile: (719) 395-4905

PLAINTIFF'S ADDRESS:

Predator International, Inc.
4401 S. Broadway, Suite 201
Englewood, CO 80113

6764\23312\Fed Case\Complaint

US006526893B2

(12) **United States Patent**
May et al.

(10) **Patent No.: US 6,526,893 B2**
(45) **Date of Patent: Mar. 4, 2003**

(54) **POLYMER BALLISTIC TIP PELLETS**

(76) Inventors: **Thomas R. May**, 14654 CR 162, Nathrop, CO (US) 81236; **Lee T. Phillips**, P.O. Box 417, Hartsel, CO (US) 80449

(*) Notice: Subject to any disclaimer, the term of this patent is extended or adjusted under 35 U.S.C. 154(b) by 0 days.

(21) Appl. No.: **09/770,816**

(22) Filed: **Jan. 26, 2001**

(65) **Prior Publication Data**

US 2002/0100389 A1 Aug. 1, 2002

Related U.S. Application Data

(60) Provisional application No. 60/179,140, filed on Jan. 31, 2000.

(51) **Int. Cl.**[7] **F42B 12/34**
(52) **U.S. Cl.** **102/508**; 102/517; 102/518
(58) **Field of Search** 102/501, 507–510, 102/514–519

(56) **References Cited**

U.S. PATENT DOCUMENTS

3,941,059 A	*	3/1976	Cobb	102/510
4,005,660 A		2/1977	Pichard	
4,245,557 A	*	1/1981	Knappworst et al.	102/517
4,251,079 A		2/1981	Earl et al.	
5,150,909 A		9/1992	Fitzwater	
5,471,719 A		12/1995	Sawyers	
5,728,349 A		3/1998	Persson	
6,244,186 B1	*	6/2001	Pichard	102/508

FOREIGN PATENT DOCUMENTS

CA	990136	* 6/1976	102/501
DE	191181	* 1/1907	102/507
EP	359946	* 3/1990	102/501
GB	2269654	* 2/1994	102/517
GB	2279440	* 1/1995	102/501
RU	1808115	* 4/1993	102/517
RU	2000539	* 9/1993	102/501

* cited by examiner

Primary Examiner—Harold J. Tudor
(74) *Attorney, Agent, or Firm*—Theresa M. Seal, Esq.

(57) **ABSTRACT**

Soft lead pellets with hard polymeric tips for use in air guns and the like are disclosed. The lead pellets have forward pointed tip portions made from a hard polymeric material. Tip portions are employed in three different configurations including a hollow and solid heads. The hard tip in each of the pellets enables the pellet when fired from an air gun to pierce the fur and skin of small game animals, for example, before the lead portions of the head and skirt portions begin to deform, imparting shock to the surrounding soft tissue, and shattering bone. The disclosed pellets provide both accuracy due to the ballistic tip, and power from the weight of the soft lead.

4 Claims, 3 Drawing Sheets

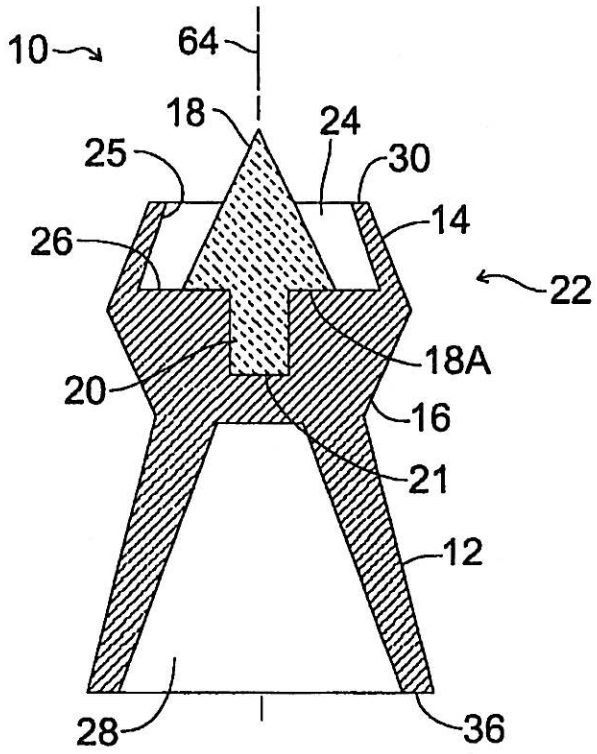

EXHIBIT 1

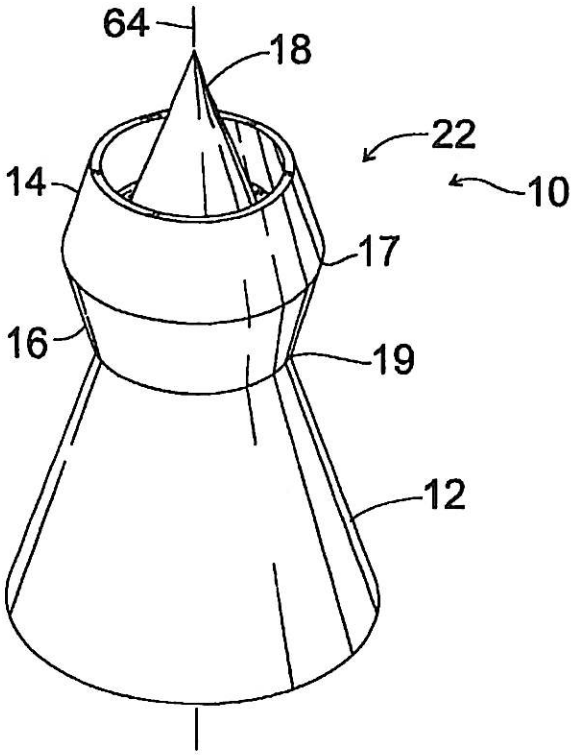

Fig. 1a

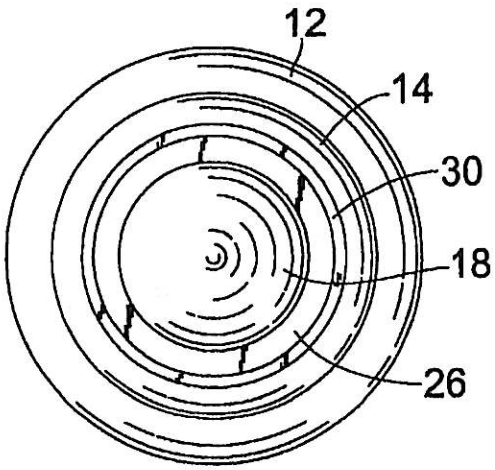

Fig. 1b

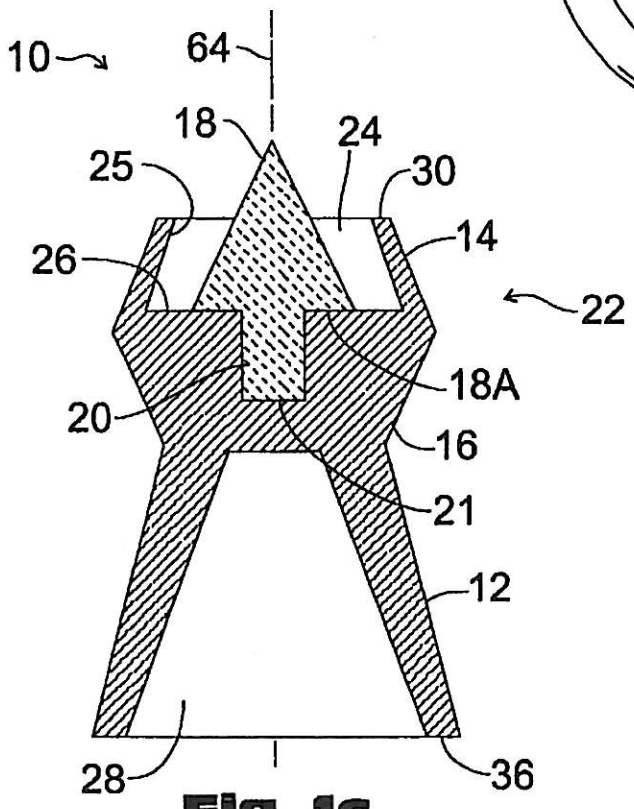

Fig. 1c

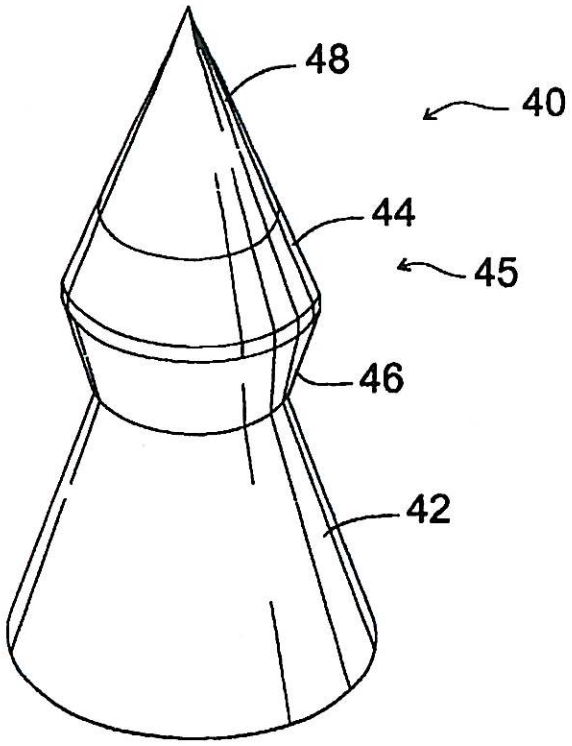

Fig. 2a

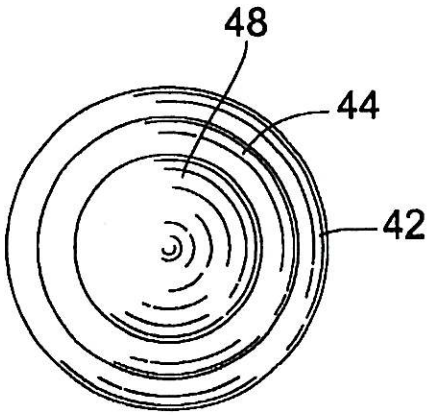

Fig. 2b

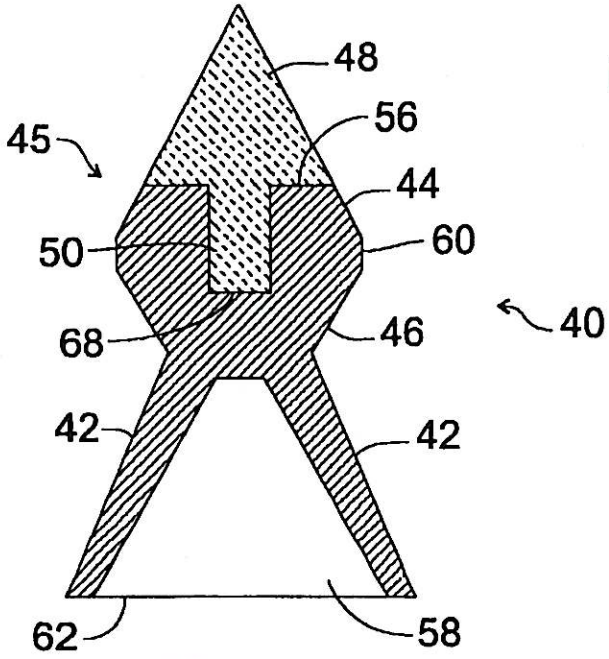

Fig. 2c

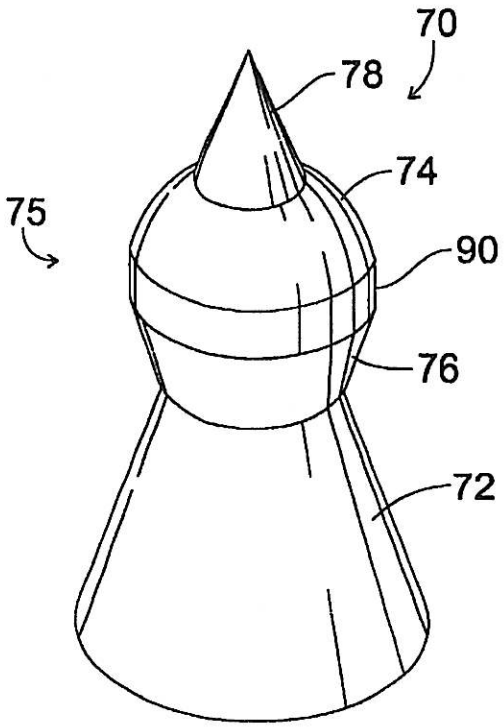

Fig. 3a

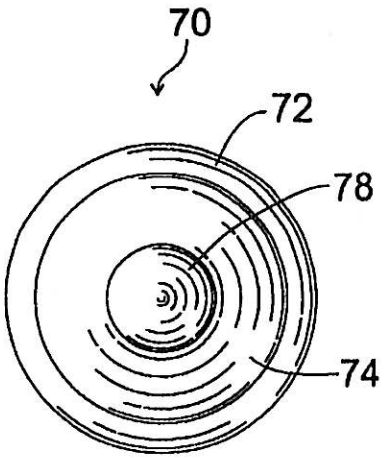

Fig. 3b

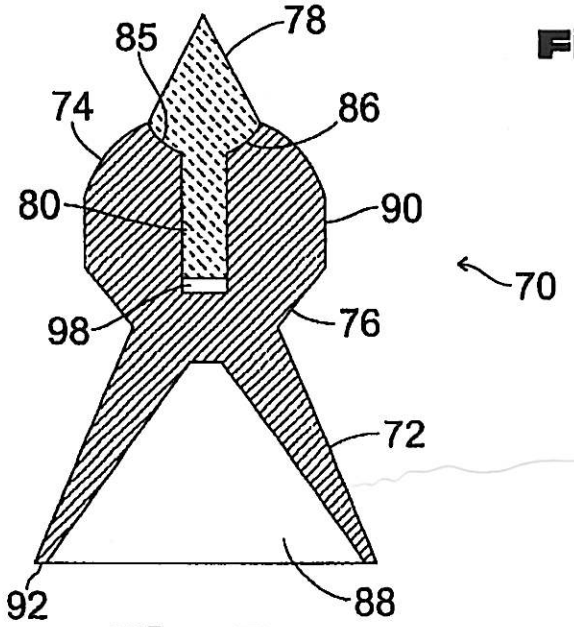

Fig. 3c

POLYMER BALLISTIC TIP PELLETS

CROSS REFERENCES

Applicants claim the benefit of the earlier filed Provisional Application No. 60/179,140 filed Jan. 31, 2000.

BACKGROUND OF THE INVENTION

A. Field of the Invention

This invention relates to pellets for use as ammunition in air guns or gas guns.

B. Background

As conventional fire arm type weapons come under political attacks, air guns and gas powered guns are gaining in popularity. While air and gas powered guns have been widely used previously, they have not generally been effective for hunting and harvesting of game. The typical pellet loads in use today are of two types. Solid head pellets, which tend to overpenetrate without imparting a shock to the target. Conversely, the typical hollow point pellets compress too quickly, becoming clogged with animal fur, fat and skin, which tends to cushion against the shock to the adjacent soft tissue.

Other attempts have been made to solve these problems providing pellets made of plastics, resulting in limitations on the range and shock force.

SUMMARY OF THE INVENTION

A polymeric ballistic tip pellet for use as ammunition in an air or gas powered gun is disclosed. The ballistic tip pellet comprises a frusto-conical skirt portion with a hollow tapering cavity, and an annular terminus having maximum diameter complimentary to the inner bore of a gun barrel. A head portion is connected to the skirt portion. Head portion has attached thereto a sharply pointed, conical tip formed from a hard polymeric material which is attached to a base portion intermediate said tip and said skirt portion. A means is provided for attaching the tip to the base portion. Skirt portion is coaxial with the head portion and the tip. The head portion and skirt portion are joined at a plane parallel to the plane of said annular terminus and perpendicular to a longitudinal axis of said pellet; such that when placed inside a hollow bore an air-gun barrel, the skirt portion serves as an air foil to seal an impulse of compressed air or gas between inner bore walls and the compressed air source to propel said pellet in an accurate, high velocity, generally flat trajectory through the discharge end of the gun barrel directed towards a predetermined target.

It is an object of the present invention to provide a pellet for use in an air gun with a hard polymeric tip which does not deform on contact.

Yet another object of the present invention is to provide a pellet for use in an air gun which cleanly penetrates animal fur, fat and skin to impart a shattering force upon contact with bone.

Another object is to provide a pellet for use in an air gun which clears a path for a hollow head of an attached pellet to facilitate delivery of massive shock to bone and tissue.

It is a further object of the present invention to reduce the weight of a pellet while simultaneously increasing the penetrating force delivered to the quarry.

Yet another object of the present invention is to provide an increased range of accuracy and enable a wider target area on an animal.

Another object of the present invention is to provide a variety of pellet configurations, each having a hard polymeric tip for greater penetration and increased force.

DESCRIPTION OF THE DRAWINGS

FIG. 1*a* is the perspective view of a hollow head pellet with a polymeric ballistic tip;

FIG. 1*b* is a top view of the hollow head of pellet of FIG. 1A;

FIG. 1*c* is an elevational view of a section of the hollow head pellet taken through the center of the pellet;

FIG. 2*a* is a perspective view of an alternative embodiment of the pellet with a solid head and polymeric ballistic tip;

FIG. 2*b* is a top view of the solid head pellet;

FIG. 2*c* is an elevational section view taken through the center of the solid head pellet.

FIG. 3*a* is a perspective view of another alternative embodiment of a pellet having a central cavity and a polymeric ballistic tip;

FIG. 3*b* is a top view of the cavity head pellet;

FIG. 3*c* is an elevational section view taken through the center of the cavity head pellet.

DETAILED DESCRIPTION

Referring first to FIGS. 1(*a*), (*b*) and (*c*), a polymeric ballistic tip pellet is generally designated **10**. Pointed tip **18** formed from a hard polymer extends longitudinally from pellet **10** along imaginary axis **64**. Top portion **22** is comprised of a pair of frusto-conical sections **14, 16** joined at a co-planer junction defined at their larger diameter and symmetrical about a horizontal plane perpendicular to longitudinal axis **64**. Tapered crown **14** extends axially outward toward pointed tip **18**, forming cavity **24** between crown **14** inner wall **25**, and pointed tip **18**. Pointed tip **18** extends longitudinally beyond rim **30** of crown **14**, so that when the pellet is fired, tip **18** will make first contact with a target, such as wild game.

Tapering middle portion **16** extends axially in the opposite direction from crown portion **14**, tapering inward to junction **19** with skirt portion **12**. Skirt portion **12** is also a frusto-conical section, tapering axially outward and away from the tip **18** to a terminal ring **36**. Skirt portion **12** has a hollow interior and is open at the distal end adjacent ring **36**. The diameter of terminal ring **36** is the maximum diametric dimension of the entire pellet **10**. The diameter of terminal ring **36** is complementary to the desired bore of the pellet-air or -gas gun, typically of .25 caliber. The weight, depending on which configuration of the disclosed pellet is used, ranges from 20 to 27 grains in the .25 caliber pellet size. The pellet **10** weight decreases in guns of smaller bores and increases for guns having larger bores.

Cavity **28** is formed by skirt portion **12**. Cavity **28** is designed to capture a blast of air or gas directed into the gun barrel when the gun is fired. The pressurized air or gas is scaled between the walls of the gun barrel (not shown) and terminal ring **36**, to create a parachute effect in cavity **28** which launches pellet **10** from a gun barrel at a high velocity and flat trajectory.

Referring to FIG. 1B, the relative concentric diameters are illustrated in plan view. Pointed tip **18** is supported on shelf **26**. Rim **30** is of an intermediate diameter between tip **18** and frusto-conical section **14**. Skirt **12** is of maximum diameter relative to all other portions.

Pointed tip **18** appears as an arrowhead in cross-sectional view in FIG. 1C. Pointed tip **18** has a cylindrical butt end **20** opposite the point. Butt end **20** is of a smaller diameter than the flared portion of tip **18**. Butt end **20** extends axially down

into a hollow cylindrical recess **21** formed in tapering mid section **16**, and is retained there via a friction fit facilitated by precision tolerances. Adhesive or threads may be employed advantageously to permanently secure tip **18** into tapered mid section **16** adjacent shelf **26**.

When the pellet **10** is fired from an air gun the polymer tip **18** is the forward most point of pellet **10** and makes contact with the target first. Tip **18** penetrates at least partially into, for example, a small animal, before top portion **22** comes into contact therewith. Top portion **22** is made of soft lead, which is deformable on contact with the quarry. The soft lead material also has greater density than the polymer tip **18**. The soft lead top portion **22** deforms and spreads outwardly to form a larger radius as pellet **10** penetrates further into the game animal. Skirt portion **12**, also made from soft lead, deforms and spreads as well, imparting additional force through the fur and skin of the animal. Since the hard polymer tip **18** does not deform, it cleanly cuts through the fur, skin and fat layers of the animal with enough force to shatter bone. Tip **18** clears the path for the hollow top portion **22** of the lead pellet **10** and the deformation of the soft lead top portion **22** imparts massive shock into the adjacent soft tissue of the animal.

Referring now to FIGS. **2***a* through **2***c*, an alternative embodiment of the disclosed polymer ballistic tip pellet **40** is illustrated. This configuration of pellet **40** varies from that of FIGS. **1***a–c* in that the head portion **45** does not have a hollow cavity **24** surrounding the tip **48**. Head portion **45** is comprised of opposing frusto-conical sections **44**, **46**, connected by a perimeter band **60**. Skirt portions **42** is a hollow, frusto-conical section flaring outwardly to the terminal annulus **62**, which defines the maximum radius of the pellet **40**. Cavity **58** provides the air foil to capture pressurized air, the propulsion impulse, in the bore of the gun.

The tip portion **48** has a cylindrical butt end **50** which is permanently fixed in cavity **68** of head portion **45**. Shelf **56** supports the tip **48** adjacent first frusto-conical section **44**.

The end view, as shown in FIG. **2***b*, shows the tip **48** arranged concentrically with first frusto-conical portion **44** and skirt portion **42**. Second frusto-conical portion **46** is hidden in this end view.

Another alternative embodiment employing a polymer ballistic tip **78** in a soft lead pellet **70** is illustrated in FIGS. **3***a–3c*. A sharp tip portion **78** is fixedly mounted on head portion **75**, which has a dome-shaped first portion **74** adjacent to center band **90**, which is in turn connected to frusto-conical portion **76**. The tip **78** is conical, terminating in a curved edge **85** which is supported in an arcuately-shaped cup **86**. Tip **78** has a cylindrical butt end **80** which is inserted into cavity **98** of head portion **75**. Butt end **80** does not extend to the bottom of cavity **98**, thereby leaving a hollow chamber into which tip **78** is compressible on contact with a target. Skirt portion **72**, similarly to skirts **12**, **42**, defines hollow recess **88** and terminates at annulus **92** which is the maximum radius of the pellet **70**.

In all three configurations, the preferred construction of the pellets **10**, **40**, **70** is of soft lead, with the exception of the polymeric tip portions **18**, **48**, **78**.

The disclosed configurations are compatible for use in conventional .25 caliber air guns, and may vary in weight from 20 grains to 27 grains in a typical arrangement. The disclosed tips may be varied dimensionally and adapted for use in other air guns of smaller or larger bores, as well as for use in shotgun slugs, muzzle loader slugs and hand gun ammunition. The grain of the pellets will vary correspondingly to an increase or decrease of the gun bore.

The hard tips enable the pellets when fired from an air gun to pierce the fur and skin of small game animals, for example, before the head and skirt portions, made of lead, begin to deform, imparting shock to the surrounding soft tissue, and shattering bone. The disclosed pellets provide both accuracy due to the ballistic tip, and power from the weight of the soft lead.

According to the provisions of patent statutes, I have explained the principle, preferred construction and mode of operation of my invention and have illustrated and described what I now consider to represent its best embodiments. However, it should be understood that within the scope of the appended claims, the invention may be practiced otherwise and as specifically illustrated and described.

We claim:

1. A polymeric ballistic tip pellet for use as ammunition in an air or gas powered gun, comprising:

a forward head portion formed from a deformable metallic material, said head portion having a bottom base opposite a top front-end;

a rearward frusto-conical skirt portion, formed of a deformable metallic material, joined to said head portion at said base, said skirt portion having a hollow tapering cavity coaxial with said head portion extending downward and outward to a bottom annular terminus, said annular terminus having a maximum diameter complimentary to an inner bore of a gun barrel providing a seal therein; and

a sharply pointed, solid conical tip formed from a hard polymeric material, said tip being attached to said base of said head portion and protruding forwardly from said front-end, an annular cavity formed in said forward head portion surounding said conical tip, such that said tip enables said pellet to pierce for and skin of small game animals before said head and skirt portions begin to deform, imparting shock to surrounding soft tissue and shattering bone.

2. The polymeric ballistic tip pellet as set forth in claim **1**, wherein

said head portion having a forward frusto-conical section concentric to said tip, said section extending downward and outward to said base; and

said base having a rearward frusto-conical section extending upward and outward from said skirt, abutting said forward frusto-conical section at their respective maximum radius, such that when fired from an air gun, said tip cuts a pilot hole on impact with small game animals allowing said pellet to penetrate deep into tissue delivering a terminable shock effect.

3. The Polymeric ballistic tip pellet as set forth in claim **2**, wherein a means for fastening said tip to said base is comprised of a cylindrical shaft attached to said conical tip adjacent said point extending axially into a hollow recess of said base, and retained therein by a frictional fit.

4. The polymeric ballistic tip pellet as set forth in claim **3**, wherein said means for fastening also includes an adhesive material applied to the cylindrical shaft.

* * * * *

WELCOME

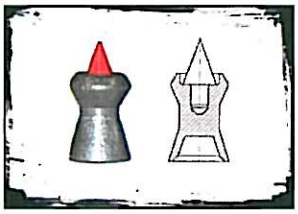

The patented Predator Polymag™ (polymer tip pellet) is a premium quality hunting pellet which combines a hollow head with a sharp polymer tip for unsurpassed performance on small game. Whether ridding your garden of unwanted pests or stalking your favorite hardwoods in search of squirrel, experience excellent accuracy and efficiency when hunting with Predator Polymags™.

The Predator Polymag™ (polymer tip pellet) was designed specifically to be the most effective and efficient airgun hunting ammunition available. To accomplish that goal, the following features were incorporated into the design:

Features	Advantages
Innovative head design combines sharp polymer tip with hollow head	Delivers penetration and shock to vital organs. Cuts and shatters bone on contact.
Aerodynamic shape	Excellent flight characteristics. High ballistic coefficient allows for higher retained velocity and flat trajectory. Allows hunter to take game efficiently.
Lightweight	.177 caliber weighs only 8 grains .22 caliber weighs only 16 grains
Standard airgun application	Accurate and efficient. Visually attractive and cost effective.

Copyright 2008-2009. Predator Pellets. All rights reserved. Site Created By GoDaddy Custom Design Group

EXHIBIT 2

PRODUCTS

Performance Polymag™ (polymer tip pellet)

Experience better accuracy, deeper penetration and higher velocity with Predator's revolutionary new hunting Polymags™ (polymer tip pellet). Hollow point design creates instant expansion on impact allowing for the taking of larger animals. Hard polymer tip provides excellent flight characteristics.

Currently available in .177, .20 and .22 calibers

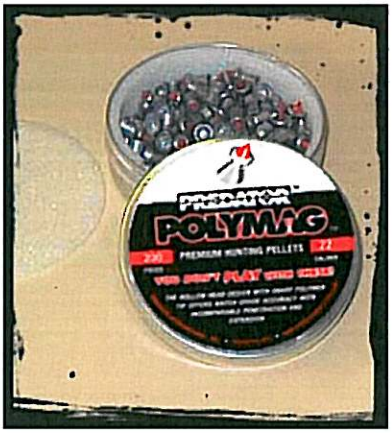

Copyright 2008-2009. Predator Pellets. All rights reserved. Site Created By GoDaddy Custom Design Group

FEATURES

The Predator Polymag™ (polymer tip pellet) features a traditional hollow point design in a standard airgun application. The aerodynamic shape and hard polymer tip provide excellent flight characteristics. Other features include:

- Higher Velocity & Flat Trajectory
- Very Accurate and Efficient
- Allows for Deeper Penetration
- Instant Expansion on Impact
- Light Weight (.177 cal weighs 8gr, .22 weighs 16gr)

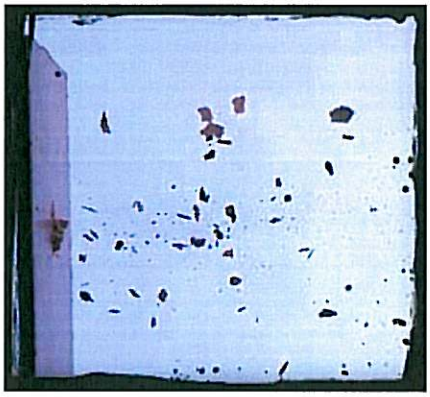

WARNING: Predator Polymag™ (polymer tip pellet) are designed and intended to be used by responsible adults for hunting small game, and pest control. As always, precise shot placement is critical for the humane taking of any small game animal, and ALWAYS follow the four rules of safe gun handling.

Copyright 2008-2009. Predator Pellets. All rights reserved. Site Created By GoDaddy Custom Design Group

Home Promote *Everything* About Your Business on PR.com Join Now Sign In
Business Directory | Products | Services | Jobs | Articles | Press Releases
PRESS RELEASES Search: Press Releases All press releases Search
Submit Your Press Release
News by Category | News by Country | News by US Region | Recent News | Add PR.com Press Releases to Your Website

Press Releases

Gamo USA Corp

Gamo Hunter
Find great deals and save! Compare products, prices & stores
www.Shopping.com

Gamo Air Prices
We Have Millions of Products Gamo Air for Sale. Reviews
www.NexTag.com

Gamo Products on Sale
Pay securely. Fast & easy shipping. Huge selection. Order now and save!
www.amazon.com

Ads by Google

PRESS RELEASE

Receive press releases from Gamo USA Corp: By Email RSS Feeds: XML MY YAHOO!

Gamo USA Corp Red Fire™

Air Gun Ammunition Never Looked So Good. Gamo Develops Red Fire™ Air Gun Pellets.

Gamo Usa
70+ Gamo Products at Great Prices Shop, Compare and Save at Pronto.
Gamo.Pronto.com

Want Sporting Goods?
Compare Prices, Merchants & Models. Savvy Shoppers Compare & Save!
SportingGoods.PriceGrabber.com

Owl Pellets
Extra Large Pellet Regular Size Price
www.pelletlab.com

Gamo Shadow
Great Deals! Thousands of Stores Buy Smart and Save with Confidence
shopping.yahoo.com

Ads by Google

Ft. Lauderdale, FL, November 13, 2008 --(PR.com)-- Adding to the already extensive line of air gun ammunition Gamo USA Corp. a precision air gun manufacture releases the Red Fire™ air gun pellet. You will experience better accuracy, deeper penetration and higher velocity with these revolutionary new hunting polymer tipped pellets. The hollow point design creates instant expansion on impact allowing for the taking of larger animals. The hard polymer tip provides excellent flight characteristics as well. This will be one of the air gun industries signature pellets.

The Red Fire ™ is designed specifically to be the most effective and efficient air gun hunting ammunition available.

Specifications:

Higher Velocity & Flat Trajectory
Accurate and Efficient
Allows for Deeper Penetration
Instant Expansion on Impact
Light Weight
.177 cal weighs 8gr, .22 weighs 16gr

"We wanted a pellet with not only capability of deeper penetration but an aerodynamic design that also travels in an even form; the air gun enthusiast will be pleased." States Amanda Davis Manager of Customer Service.

To learn more about Gamo USA products and accessories, visit: www.gamousa.com. One of the top air gun

manufactures is the world; Gamo is also the largest air gun manufacturer in Europe. Shooters in over 50 countries all over the world use their air rifles and air pistols.

###

Contact Information

Gamo USA Corp
Amanda Davis
954-581-5822
info@gamousa.com
www.gamousa.com

Click here to view the list of recent Press Releases from Gamo USA Corp

Promote Your Business Affiliate Program Link To Us Email this page to a friend

Contact Us About Us Terms of Use Help





Ammunition >High Performance >Red Fire .177 Pellets Tin of 150

Expert Evaluation | 3D View | java 3-D Images Require Java Runtime Environment. | Video

Expert Evaluations | 3D View | Video | Print Format | Product Manual | Product Reviews

Red Fire .177 Pellets Tin of 150 [Item # 632270154]

Designed specifically to be the most effective and efficient airgun hunting ammunition available
NOT AVAILABLE IN .22 CAL



[ENLARGE]

Experience better accuracy, deeper penetration and higher velocity with GAMO's revolutionary new hunting Red Fire™(polymer tip pellet). The hollow point design creates instant expansion on impact allowing for the taking of larger animals. The hard polymer tip provides excellent flight characteristics as well.

- Higher Velocity & Flat Trajectory
- Accurate and Efficient
- Allows for Deeper Penetration
- Instant Expansion on Impact
- Light Weight

2 user(s) rated this product
Write/Read reviews about this product.

$9.99 BUY NOW

SPECIFICATIONS

Cal .177 (4.5 mm)	MUZZLE	10 YARDS	30 YARDS
Velocity (fps)	843	-	-
Kinetic Energy, (ft x lbs)	12.9	-	-
Paraffin Penetration, (inches)	0.62	0.46	0.42
Paraffin Expansion, (inches)	0.29	0.26	0.24
Grouping, (inches)	N/A	0.25	-

Pellet Weight (grain): 8.0 grain

*Test made with air rifle: GAMO Hunter Pro

EXHIBIT 4