USDC SCAN INDEX SHEET

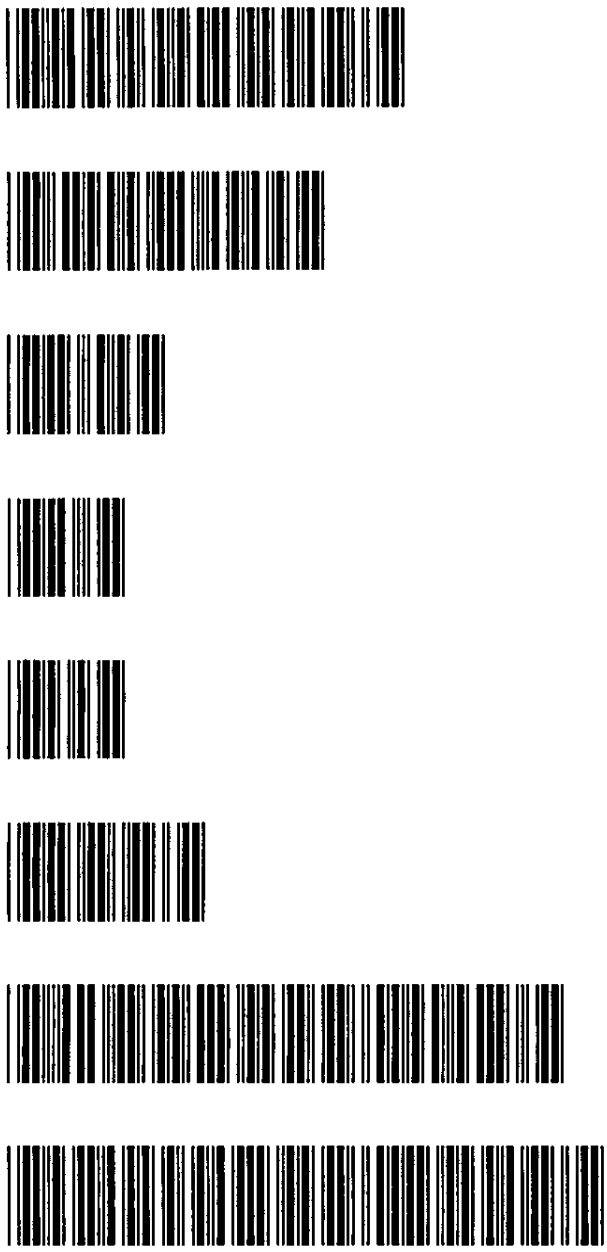

SWD 7/11/05 15:09

3:05-CV-01392 QUALCOMM INC V. BROADCOM CORP

1

CMP.

ORIGINAL

DAVID E. KLEINFELD (Bar No. 110734)
BARRY J. TUCKER (Bar No. 164163)
HELLER EHRMAN LLP
4350 La Jolla Village Drive, 7th Floor
San Diego, CA 92122-1246
Telephone: +1.858.450.8400
Facsimile: +1.858.450.8499

ROBERT T. HASLAM (Bar No. 71134)
NITIN SUBHEDAR (Bar No. 171802)
HELLER EHRMAN LLP
275 Middlefield Road
Menlo Park, CA 94025-3506
Telephone: +1.650.324.7000
Facsimile: +1.650.324.0638

JAMES R. BATCHELDER (Bar No. 136347)
DAY CASEBEER MADRID & BATCHELDER LLP
20300 Stevens Creek Boulevard, Suite 400
Cupertino, CA 95014
Tel: (408) 873-0110
Fax: (408) 873-0220

Attorneys for Plaintiff
QUALCOMM INCORPORATED

FILED
JUL 11 2005
CLERK, U.S. DISTRICT COURT
SOUTHERN DISTRICT OF CALIFORNIA
BY DEPUTY

UNITED STATES DISTRICT COURT

SOUTHERN DISTRICT OF CALIFORNIA

QUALCOMM INCORPORATED, Plaintiff, v. BROADCOM CORPORATION, Defendant.	Case No.: 05 CV 1392 J (BLM) **COMPLAINT FOR PATENT INFRINGEMENT** **(DEMAND FOR JURY TRIAL)**

Plaintiff QUALCOMM Incorporated ("QUALCOMM") for its complaint herein states:

PARTIES

1. Plaintiff QUALCOMM is a corporation organized and existing under the laws of the state of Delaware, with its principal place of business in San Diego, California.

Heller Ehrman LLP

2. Defendant Broadcom Corporation ("Broadcom") is a corporation organized and existing under the laws of the state of California, with its principal place of business in Irvine, California.

3. QUALCOMM is informed and believes and thereon alleges that Broadcom is doing business in California and in this district.

JURISDICTION AND VENUE

4. This is an action for patent infringement. The claims arise under the patent laws of the United States, Title 35 U.S.C. §§ 1 *et seq.* This Court has subject matter jurisdiction over these claims pursuant to 28 U.S.C. §§ 1331 and 1338(a).

5. Venue is proper in this district under 28 U.S.C. §§ 1391(b) and (c), and 1400(b), as Broadcom resides and/or conducts substantial business in this district and has committed, and is continuing to commit, acts of infringement in this district.

GENERAL ALLEGATIONS

6. This action arises out of Broadcom's infringement of seven (7) patents assigned to QUALCOMM.

QUALCOMM's Patents

7. On August 6, 1996, United States Patent No. 5,544,196 (the "'196 Patent"), entitled "Apparatus and Method for Reducing Message Collision Between Mobile Stations Simultaneously Accessing a Base Station in a CDMA Cellular Communication System," was duly and legally issued to QUALCOMM as assignee of the inventors, Edward G. Tiedemann, Jr., Lindsay A. Weaver, Jr., and Roberto Padovani. A true and correct copy of the '196 Patent is attached hereto as Exhibit 1.

8. On October 26, 1993, United States Patent No. 5,257,283 (the "'283 Patent"), entitled "Spread Spectrum Transmitter Power Control Method and System," was duly and legally issued to QUALCOMM as assignee of the inventors, Klein S. Gilhousen, Roberto Padovani, and Charles E. Wheatley, III. A true and correct copy of the '283 Patent is attached hereto as Exhibit 2.

9. On October 22, 1996, United States Patent No. 5,568,483 (the "'483 Patent"), entitled "Method and Apparatus for the Formatting of Data for Transmission," was duly and legally

issued to QUALCOMM as assignee of the inventors, Roberto Padovani, Edward G. Tiedemann, Jr., Joseph P. Odenwalder, Ephraim Zehavi, and Charles E. Wheatley, III. A true and correct copy of the '483 Patent is attached hereto as Exhibit 3.

10. On July 7, 1998, United States Patent No. 5,778,338 (the "'338 Patent"), entitled "Variable Rate Vocoder," was duly and legally issued to QUALCOMM as assignee of the inventors, Paul E. Jacobs, William R. Gardner, Chong U. Lee, Klein S. Gilhousen, S. Katherine Lam, and Ming-Chang Tsai. A true and correct copy of the '338 Patent is attached hereto as Exhibit 4.

11. On August 5, 1997, United States Patent No. 5,655,220 (the "'220 Patent"), entitled "Reverse Link, Transmit Power Correction and Limitation in a Radiotelephone System," was duly and legally issued to QUALCOMM as assignee of the inventors, Ana L. Weiland, Richard K. Kornfeld, and John E. Maloney. A true and correct copy of the '220 Patent is attached hereto as Exhibit 5.

12. On December 31, 1996, United States Patent No. 5,590,408 (the "'408 Patent"), entitled "Reverse Link, Transmit Power Correction and Limitation in a Radiotelephone System," was duly and legally issued to QUALCOMM as assignee of the inventors, Ana L. Weiland, Richard K. Kornfeld, and John E. Maloney. A true and correct copy of the '408 Patent is attached hereto as Exhibit 6.

13. On June 10, 1997, United States Patent No. 5,638,412 (the "'412 Patent"), entitled "Method for Providing Service and Rate Negotiation in a Mobile Communication System," was duly and legally issued to QUALCOMM as assignee of the inventors, Robert D. Blakeney, II and Edward G. Tiedemann. A true and correct copy of the '412 Patent is attached hereto as Exhibit 7.

14. The patents described in paragraphs 7 through 13 above, copies of which are attached hereto as Exhibits 1 through 7, are referred to collectively herein as the "patents-in-suit." The patents-in-suit relate generally to the transmission, reception, and processing of communication signals, including radio signals and/or signals for wireless telephony.

15. On information and belief, Broadcom manufactures, sells and offers for sale in the United States products that comply with the GSM family of standards and technical specifications

adopted by the 3rd Generation Partnership Project ("3GPP") and/or manufactures, sells and offers for sale in the United States products intended to be used with or incorporated into products or systems that comply with the GSM family of standards and technical specifications adopted by the 3rd Generation Partnership Project ("3GPP").

16. QUALCOMM is informed and believes and thereon alleges that Broadcom has been and is infringing, literally and/or under the doctrine of equivalents, one or more claims of each of the patents-in-suit – directly and/or indirectly pursuant to 35 U.S.C. § 271(a), (b), (c) and/or (f).

FIRST CAUSE OF ACTION
Patent Infringement
(35 U.S.C. §§ 271 et seq.)

17. QUALCOMM refers to and incorporates paragraphs 1 through 16 inclusive, as though fully set forth herein.

18. QUALCOMM is informed and believes and thereon alleges that Broadcom has been and is infringing, literally and/or under the doctrine of equivalents, one or more claims of each of the patents-in-suit – directly and/or indirectly pursuant to 35 U.S.C. § 271(a), (b), (c) and/or (f).

19. Broadcom threatens to continue to do the acts complained of herein, and unless restrained and enjoined will continue to do so, all to QUALCOMM'S irreparable damage.

20. By reason of Broadcom's acts alleged herein, QUALCOMM has suffered, is suffering, and – unless such acts are enjoined by the Court – will continue to suffer injury to its business and property rights, for which it is entitled to damages pursuant to 35 U.S.C. § 284 in an amount to be proved at trial.

21. By reason of Broadcom's acts alleged herein, QUALCOMM has suffered, is suffering, and – unless such acts are enjoined by the Court – will continue to suffer irreparable harm for which there is no adequate remedy at law, and for which QUALCOMM is entitled to permanent injunctive relief pursuant to 35 U.S.C. § 283.

PRAYER

WHEREFORE, QUALCOMM prays for judgment against Broadcom as follows:

(a) For judgment that Broadcom has infringed, directly and/or indirectly, the patents-in-suit;

(b) For a preliminary and permanent injunction prohibiting Broadcom, and all persons or entities acting in concert with Broadcom, from infringing, directly and/or indirectly, the patents-in-suit;

(c) For an award to QUALCOMM of all compensatory damages resulting from the direct and/or indirect infringement by Broadcom of the patents-in-suit, including pre-judgment and post-judgment interest;

(d) For judgment and an order directing Broadcom to pay QUALCOMM's reasonable attorneys' fees, expenses and costs due to this being an "exceptional" case within the meaning of 35 U.S.C. § 285;

(e) For judgment directing Broadcom to pay costs of suit; and

(f) For an award to QUALCOMM of such other and further relief as the court deems equitable, just and proper.

July 11, 2005

Respectfully submitted,

HELLER EHRMAN LLP

By 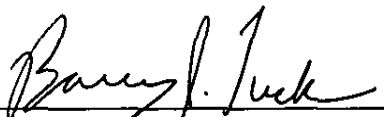

ROBERT T. HASLAM
DAVID E. KLEINFELD
BARRY J. TUCKER
NITIN SUBHEDAR

Attorneys For Plaintiff
QUALCOMM INCORPORATED

Heller Ehrman LLP

DEMAND FOR JURY TRIAL

Pursuant to Rule 38 of the Federal Rules of Civil Procedure, QUALCOMM demands a trial by jury on all issues triable of right by a jury.

Dated: July 11, 2005

Respectfully submitted,

HELLER EHRMAN LLP

By _____

ROBERT T. HASLAM
DAVID E. KLEINFELD
BARRY J. TUCKER
NITIN SUBHEDAR

Attorneys For Plaintiff
QUALCOMM INCORPORATED

US005544196A

United States Patent [19]

Tiedemann, Jr. et al.

[11] Patent Number: 5,544,196

[45] Date of Patent: Aug. 6, 1996

[54] **APPARATUS AND METHOD FOR REDUCING MESSAGE COLLISION BETWEEN MOBILE STATIONS SIMULTANEOUSLY ACCESSING A BASE STATION IN A CDMA CELLULAR COMMUNICATIONS SYSTEM**

[75] Inventors: **Edward G. Tiedemann, Jr.**; **Lindsay A. Weaver, Jr.**; **Roberto Padovani**, all of San Diego, Calif.

[73] Assignee: **Qualcomm Incorporated**, San Diego, Calif.

[21] Appl. No.: **219,867**

[22] Filed: **Mar. 30, 1994**

Related U.S. Application Data

[63] Continuation of Ser. No. 847,152, Mar. 5, 1992, abandoned.

[51] **Int. Cl.**[6] **H04B 1/69**; H04B 1/707; H04J 13/04

[52] **U.S. Cl.** **375/200**; 375/205; 375/206; 380/34; 370/18; 370/85.2

[58] **Field of Search** 375/1, 200–210; 380/34; 370/18, 85.2, 85.3; 340/825.5

[56] **References Cited**

U.S. PATENT DOCUMENTS

4,409,592 10/1983 Hunt 340/825.5
4,701,905 10/1987 Un et al. 370/18
5,155,727 10/1992 Borup et al. 370/85.3

Primary Examiner—Bernarr E. Gregory
Attorney, Agent, or Firm—Russell B. Miller; Sean English

[57] **ABSTRACT**

Collisions between messages simultaneously transmitted by multiple spread-spectrum transmitters are reduced by distributing the transmissions over the available resources of the receiver. The transmitters may be mobile stations and the receiver may be a base station in a CDMA cellular telephone system. Each mobile station uses one or more randomization methods to distribute its transmissions. In the first randomization, the mobile station time—delays its transmissions by a number of chips of the PN code with which it spreads the transmitted signal. A hash function produces the number from an identification number uniquely associated with that mobile station. In a second randomization, the mobile station randomly selects the PN code. In a third randomization, the mobile station inserts a random delay between successive message transmissions or probes if it does not receive an acknowledgement after a predetermined timeout period. A predetermined number of such transmissions is called a probe sequence. In a fourth randomization, the mobile station inserts a relatively long random delay between successive probe sequences if it does not receive an acknowledgement of any probe in the sequence. The noise level is reduced by minimizing transmission power. The mobile station increments the power of successive probes within each probe sequence. The first probe of each probe sequence is transmitted at a predetermined level.

85 Claims, 5 Drawing Sheets

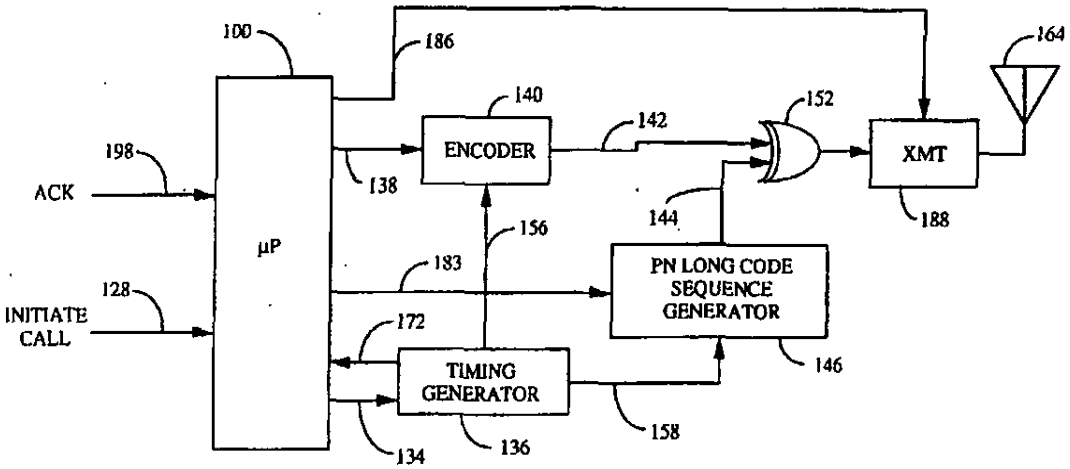

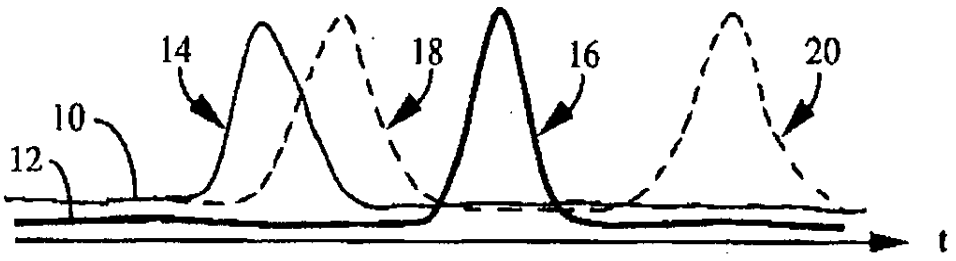

FIG. 1

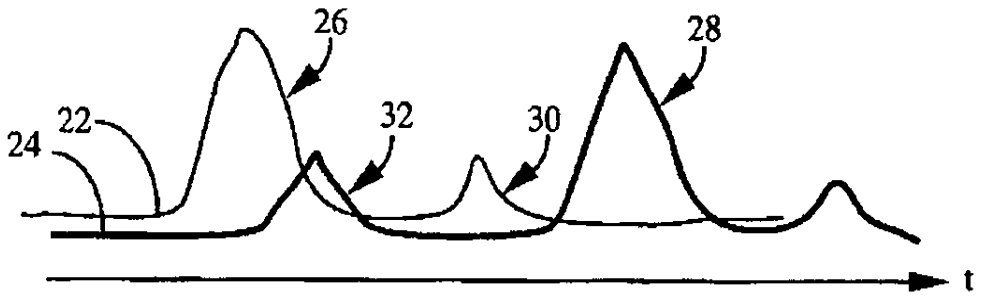

FIG. 2

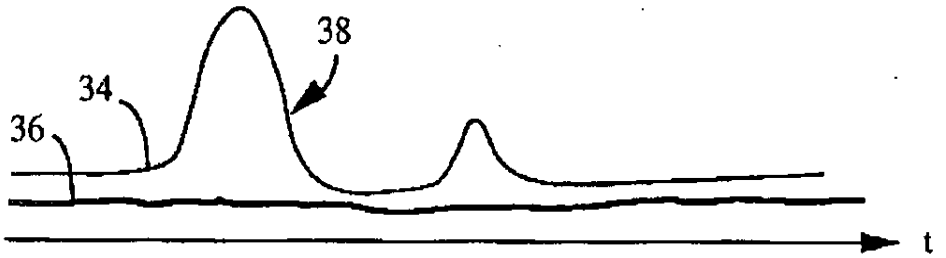

FIG. 3

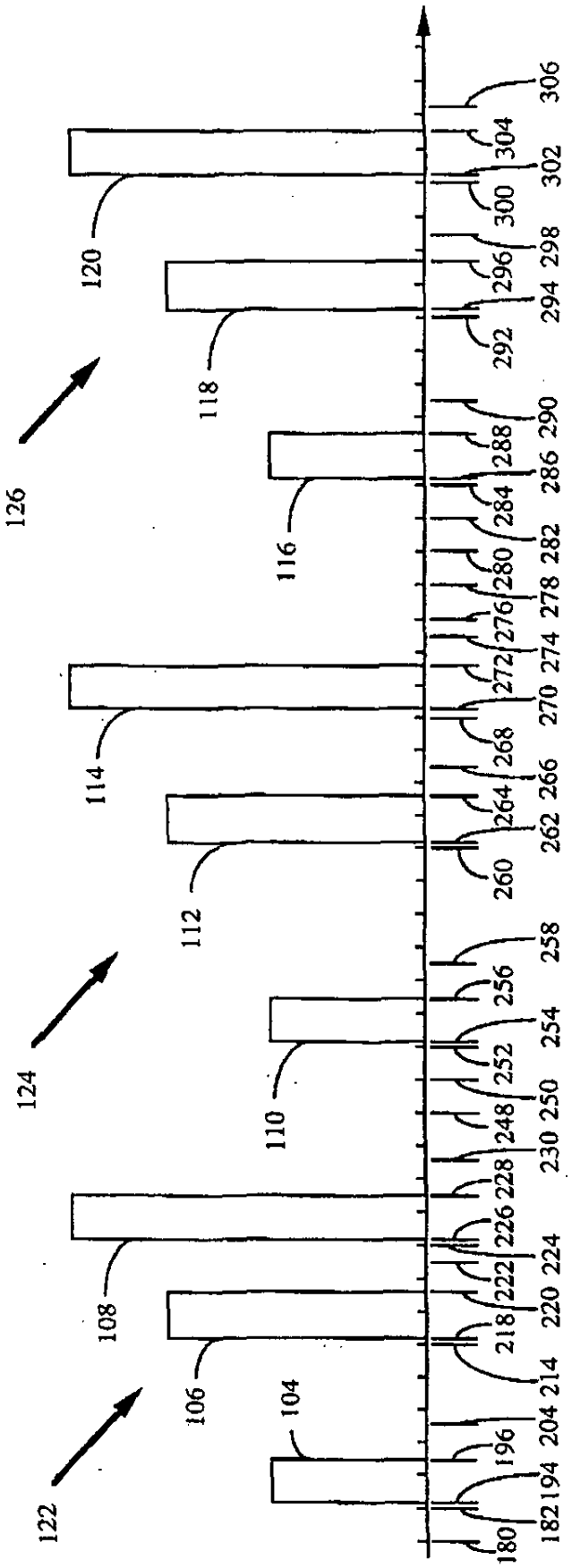
120
118
116
114
112
110
108
106
104
126
124
122
306
304
302
300
298
296
294
292
290
288
286
284
282
280
278
276
274
272
270
268
266
264
262
260
258
256
254
252
250
248
230
228
226
224
222
220
218
214
204
196
194
182
180

FIG. 4

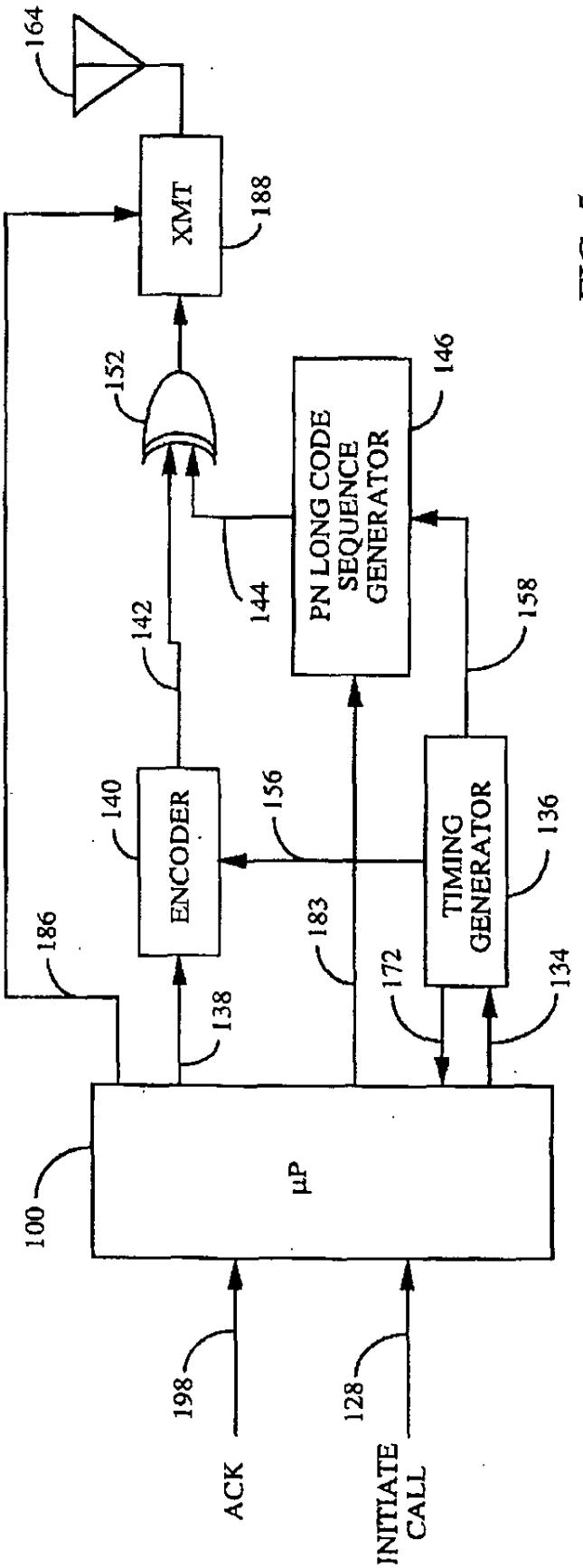
164
XMT
188
152
146
PN LONG CODE SEQUENCE GENERATOR
144
142
158
140
ENCODER
156
TIMING GENERATOR
136
186
183
172
134
138
100
μP
198
128
ACK
INITIATE CALL

FIG. 5

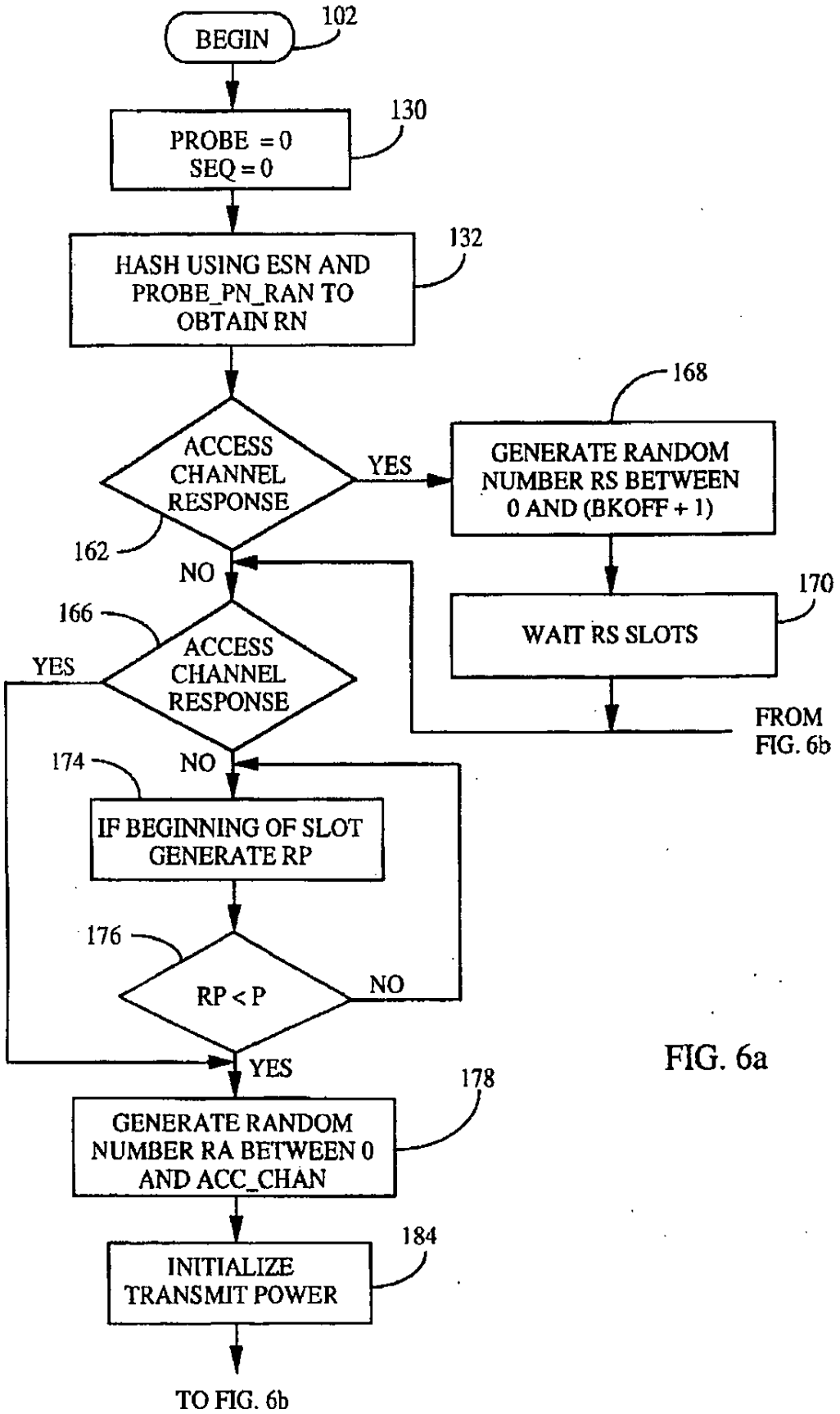
BEGIN
102
PROBE = 0
SEQ = 0
130
HASH USING ESN AND PROBE_PN_RAN TO OBTAIN RN
132
ACCESS CHANNEL RESPONSE
YES
168
GENERATE RANDOM NUMBER RS BETWEEN 0 AND (BKOFF + 1)
162
NO
170
WAIT RS SLOTS
166
ACCESS CHANNEL RESPONSE
YES
FROM FIG. 6b
NO
174
IF BEGINNING OF SLOT GENERATE RP
176
RP < P
NO
YES
178
GENERATE RANDOM NUMBER RA BETWEEN 0 AND ACC_CHAN
184
INITIALIZE TRANSMIT POWER
TO FIG. 6b

FIG. 6a

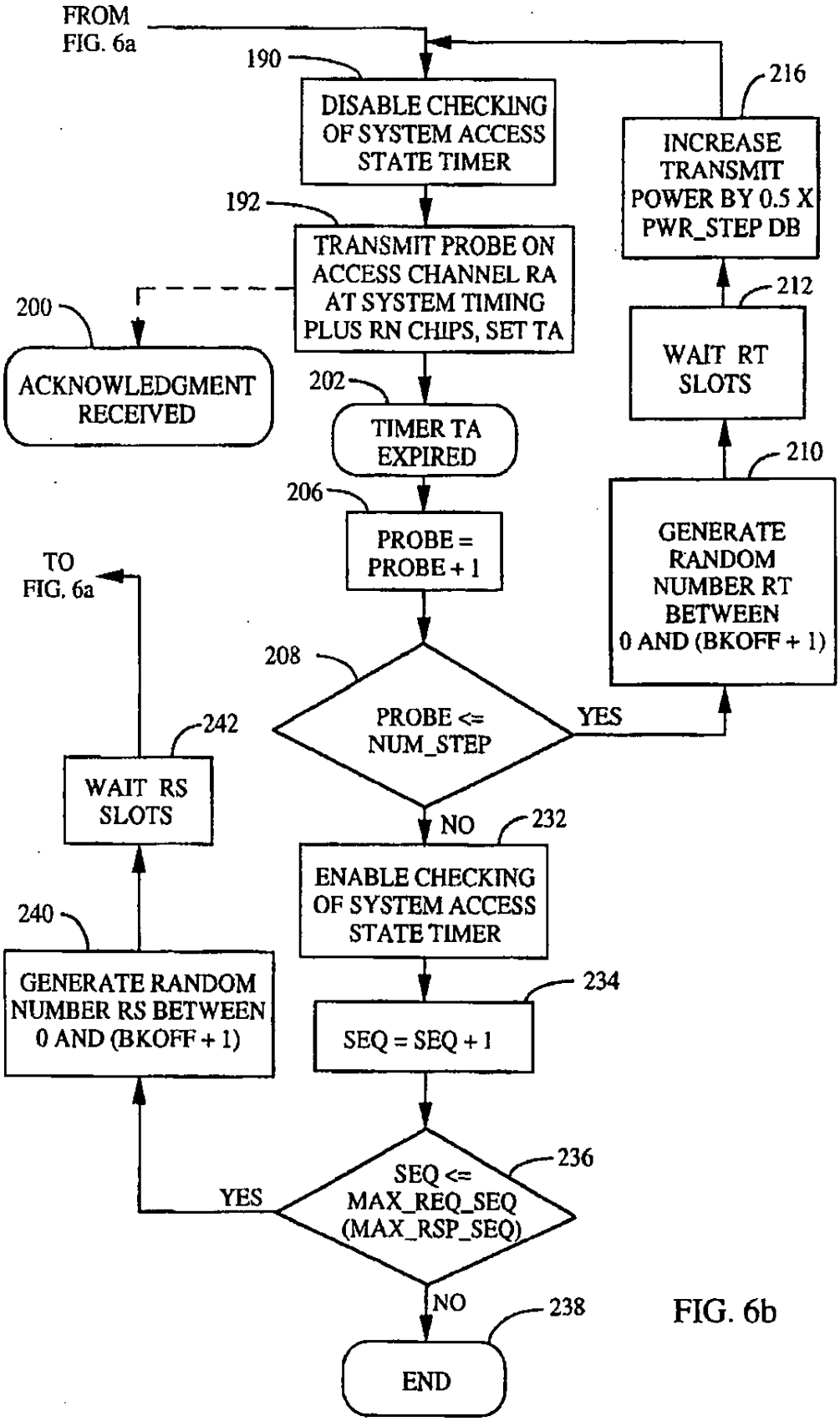
FROM FIG. 6a
190
DISABLE CHECKING OF SYSTEM ACCESS STATE TIMER
192
TRANSMIT PROBE ON ACCESS CHANNEL RA AT SYSTEM TIMING PLUS RN CHIPS, SET TA
200
ACKNOWLEDGMENT RECEIVED
202
TIMER TA EXPIRED
206
PROBE = PROBE + 1
208
PROBE <= NUM_STEP
YES
NO
216
INCREASE TRANSMIT POWER BY 0.5 X PWR_STEP DB
212
WAIT RT SLOTS
210
GENERATE RANDOM NUMBER RT BETWEEN 0 AND (BKOFF + 1)
232
ENABLE CHECKING OF SYSTEM ACCESS STATE TIMER
234
SEQ = SEQ + 1
236
SEQ <= MAX_REQ_SEQ (MAX_RSP_SEQ)
YES
NO
238
END
240
GENERATE RANDOM NUMBER RS BETWEEN 0 AND (BKOFF + 1)
242
WAIT RS SLOTS
TO FIG. 6a

FIG. 6b

APPARATUS AND METHOD FOR REDUCING MESSAGE COLLISION BETWEEN MOBILE STATIONS SIMULTANEOUSLY ACCESSING A BASE STATION IN A CDMA CELLULAR COMMUNICATIONS SYSTEM

This is a continuation of application Ser. No. 07/847,251, filed Mar. 5, 1992, now abandoned.

BACKGROUND OF THE INVENTION

The present invention relates to cellular telephone systems. More specifically, the present invention relates to a system for increasing the reliability of the cellular telephone system in environments having substantial multipath propagation or under conditions wherein a large number of mobile telephone units simultaneously attempt to access a base station.

Many communications systems have multiple transmitters that need to randomly access one or more receivers. A local area network (LAN) is one example of such a multiaccess system. A cellular telephone system is another. In any such system, when several transmitters attempt to transmit simultaneously, the messages may interfere or "collide" with one another. A receiver cannot distinguish among the messages involved in the collision.

Two such multiaccess protocols, commonly called the "Aloha" and "Slotted Aloha" protocols, are described in Bertsekas et al., *Data Networks*, chapter 4, Prentice-Hall, Englewood Cliffs, 1987. In the Aloha protocol, each transmitter may transmit a message at any time. Upon discovering that the transmitted message has collided, the transmitter waits a random delay time and retransmits the message. In Slotted Aloha, all messages fit into a time slot of a predetermined length. Upon discovering that the transmitted message has collided, the transmitter delays a random number of slots and then retransmits the message. In both methods, a random delay is introduced to prevent transmitters from retransmitting simultaneously.

The use of code division multiple access (CDMA) modulation is one of several techniques for facilitating communications in which a large number of system users are present. The use of CDMA techniques in a cellular telephone system is disclosed in U.S. Pat. No. 5,056,031 entitled "Method and Apparatus for Controlling Transmission Power in a CDMA Cellular Telephone System" and in U.S. patent application Ser. No. 07/543,496 entitled "System and Method for Generating Signal Waveforms in a CDMA Cellular Telephone System" now U.S. Pat. No. 5,109,398, both assigned to the assignee of the present invention and incorporated herein by reference.

In the above-mentioned patent, a multiple access technique is disclosed where a large number of mobile stations, each having a transceiver, communicate through base stations, also known as cell-sites, using CDMA spread spectrum communication signals. The base stations are connected to a mobile telephone switching office (MTSO), which in turn is connected to the public switched telephone network (PSTN).

The use of CDMA spread-spectrum techniques maximizes the number of mobile stations that can communicate simultaneously with the base station because the same frequency band is common to all stations. Each mobile has a pseudonoise (PN) code uniquely associated with it that the mobile station uses to spread its transmitted signal. In the above-referenced patent, this PN code is called the "long PN code." Once the call has been initiated, i.e., the base station has selected the long PN code corresponding to the transmitting mobile station, the base station can receive and de-spread the signal transmitted by the mobile station. Similarly, the mobile station can receive and de-spread the signal transmitted by the base station. In some systems, the signals may be modulated with a "pilot" PN code as well.

However, for certain types of transmissions, it is advantageous to use a common PN long code, rather than a unique long code for each mobile station. The message transmitted by a mobile station attempting to initiate a call is one example of such a transmission. A mobile station wishing to initiate calls can transmit such requests on a common "access channel" using a corresponding common PN code. The base station can monitor the access channel by despreading the signal using this PN code. The access channel is used because messages such as those for initiating a call are relatively short in comparison to voice transmissions, and a receiver could more easily monitor a relatively few access channels than the large number of unique "traffic channels" with which the mobile stations are associated by their unique PN long codes.

The access channel may be used by the mobile station not only to initiate a call, but to transmit any information to the base station at a time other than during a call that has already been initiated. For example, the access channel may be used by the mobile station to respond to an incoming call initiated by a base station over a "paging channel."

Under any of the conditions discussed above, multiple mobile stations may transmit simultaneously on the access channel. When two mobile stations transmit simultaneously and there is no multipath, the transmissions arrive at the base station separated in time by a delay equal to the difference of twice the distance between each mobile station and the base station. Under most operating conditions, it is unlikely that a large number of mobile stations will be at precisely equal distances from the base stations. However, simultaneously transmitted messages would collide if two or more stations are at the same range. Under most conditions, the base station can distinguish among the transmissions because the time between arrivals of the transmissions at the base station exceeds one PN chip.

Some operating conditions tend to produce collisions. Collisions are likely to occur when a large number of mobile stations approach the edge of a cell simultaneously, a condition causing handoffs of the mobile stations. The access channel transmissions arrive at the base station simultaneously because the mobile stations are at substantially the same distance from the base station when at the edge of the cell.

It is also possible that a large number of mobile users would attempt to simultaneously initiate calls for other reasons such as following a natural disaster. The simultaneous transmissions of multiple mobile stations on the access channel may exceed the maximum throughput of the processor in the base station.

The probability of access channel collisions increases with an increase in the number of mobile stations and with an increase in multipath reflections. Multipath compounds the problem because, while the main signals of two transmissions may be separated in time by more than one chip, multipath components of the transmissions may not be. Furthermore, as discussed in copending U.S. patent application Ser. No. 07/432,552 entitled "Diversity Receiver in a CDMA Cellular Mobile Telephone System," filed Nov. 7,

1989, now U.S. Pat. No. 5,109,390, a base station diversity receiver may have multiple correlators that combine received multipath components to improve message quality. However, ambiguities may exist between multipath components that would reduce the effectiveness of the diversity receiver. These problems and deficiencies are clearly felt in the art and are solved by the present invention in the manner described below.

SUMMARY OF THE INVENTION

The present invention reduces interference between multiple spread-spectrum transmitters operating simultaneously and improves distribution of the transmissions among the available resources of the receiver. The present invention is generally applicable to any communication system having multiple transmitters attempting uncoordinated communication with a receiver, including local area networks. In an illustrative embodiment of the present invention, the transmitters are mobile stations transmitting on an access channel and the receiver is a base station in a CDMA cellular communications network.

Each mobile station uses one or more randomization methods for its access channel transmissions. The randomizations have the effect of separating the transmissions to reduce collisions. The first randomization separates the access channel signals by adding a random time delay to each signal and the second randomization separates them by randomly changing the direct sequence spreading of each signal.

In the first randomization, called "PN randomization," the mobile station time-delays its access channel transmissions by a small amount that is greater than or equal to one chip but is much less than the length of the message itself. In contrast, a non-spread-spectrum communication system using a slotted aloha protocol must, upon a collision, typically wait to receive an acknowledgement of a transmission. If a collision occurred, typically detected by not receiving an acknowledgement, the mobile station must wait a random delay, typically several slots before retransmitting the message. Because the present invention addresses spread-spectrum systems, collisions are naturally reduced by the range difference described above and even more by adding the PN random delay which is typically much less than a slot length.

Although true randomization would be ideal, a pseudorandom method is used so that the base station can obtain the value of the delay used by the mobile station, which it requires to demodulate the transmission. The PN randomization delay may be pseudorandomly produced using a hash algorithm to which a number uniquely associated with that mobile station is provided. The input number may be the station's electronic serial number (ESN). A further advantage of a pseudorandom method for calculating the PN randomization delay is that the base station, knowing the amount of delay added by a mobile station, may more quickly acquire a signal that the mobile station subsequently transmits on a traffic channel.

PN randomization may be understood in the context of a scenario involving a number of mobile stations simultaneously transmitting at the edge of a cell, i.e., equally distant from the base station. In such a scenario, PN randomization increases the effective distance from each mobile station to the base station by a random amount.

Multipath significantly increases the difficulty experienced by a base station in distinguishing the signals simultaneously transmitted by different mobile stations. The small PN randomization delay may not be enough to separate the multipath components, which would otherwise be used by a base station diversity receiver to improve reception in multipath environments.

A second randomization, called "channel randomization," may be used to improve transmission quality in such a multipath environment. As discussed in the above-referenced patents and copending application, the CDMA transmitter spreads its signal using a PN code and the CDMA receiver demodulates the received signal using a local replica of the PN code. In channel randomization, the mobile station randomly changes the PN code with which it spreads the access channel signal. Changing the PN code effectively creates a larger number of access channels. The base station has a receiver that corresponds to each possible access channel. Even in the presence of multipath, the base station can distinguish simultaneous transmissions on different access channels.

When channel randomization is used, the base station may send the mobile station a parameter representing the maximum number of access channels, i.e., the maximum number of different PN codes, that it can receive. The base station transmits this maximum access channel parameter to the mobile station during periodic communications of system information or "overhead" between the base station and a mobile station.

A base station may not be able to distinguish among simultaneous transmissions if it receives more such transmissions than it has access channels. For that reason, mobile stations may use a third randomization called "backoff randomization" and a fourth randomization called "persistence" in addition to PN randomization and channel randomization.

Each transmission on an access channel by a mobile station attempting to communicate with a base station is called a "probe." If the base station successfully distinguishes and receives the probe, it transmits an acknowledgement to the mobile station. If the mobile station does not receive an acknowledgement to its probe after a predetermined timeout period, it attempts another probe. A predetermined number of such probes is called an "access probe sequence." The entire access probe sequence may be repeated multiple times if the mobile station does not receive an acknowledgement of any probe in the sequence.

In backoff randomization, the mobile station inserts a random delay between successive probes. Before beginning a probe, the mobile station generates a random number in a predetermined range and delays the probe by an amount proportional to the random number.

In persistence, the mobile station inserts a random delay before each access probe sequence. Before beginning an access probe sequence, the mobile station compares a randomly generated number to a predetermined persistence parameter. The persistence parameter is a probability that is used to determine whether an access probe sequence will or will not occur. The mobile station begins the access probe sequence only if the random number is within a range of numbers determined by the persistence parameter. If persistence is used, the mobile station performs the test at predetermined intervals until the test passes or until a probe is acknowledged.

Finally, if the mobile station does not receive an acknowledgment to any probes within a predetermined number of access probe sequences, it may abandon the attempt.

In a cellular telephone system, a mobile station uses the access channels for any non-voice transmissions to the base

Case 3:05-cv-01392-B-BLM Document 1 Filed 07/11/05 Page 17 of 177

station. The mobile station may, for example, request communication with the base station when the mobile user initiates a call. The mobile station may also respond on the access channel to a transmission from the base station to acknowledge an incoming call. In the latter situation, the base station can schedule its transmissions on the paging channel to more efficiently handle the responses from the mobile stations, which may be expected to occur within a certain time period. Because the base station has some control over the situation, the mobile stations are not required to use persistence for transmitting responses.

Mobile stations may further reduce interference with each other by transmitting with the minimum power necessary for their signals to be received by the base station. A mobile station transmits its first probe at a power level somewhat less than it estimates to be necessary to reach the base station. This conservative estimate may be a predetermined value or it may be calculated in response to the measured power level of a signal that the mobile station has or is receiving from the base station. A preferred embodiment is for the mobile station to measure the received power from the base station. This received power is the transmitted power of the base station times the path loss. The mobile station then uses this estimate, plus a constant correction, plus adjustment factors to set the initial transmit power. These adjustment factors may be sent to the mobile station from the base station. Some of these factors correspond to radiated power of the base station. Since the path loss from the mobile station to the base station is essentially the same as from the base station to the mobile station, the signal received at the base station should be at the correct level, assuming that the base station has supplied the appropriate correction factors. After transmitting the first access probe at this minimum power level, the mobile station increases the power of successive probes within each access probe sequence by a predetermined step amount.

The foregoing, together with other features and advantages of the present invention, will become more apparent when referring to the following specification, claims, and accompanying drawings.

BRIEF DESCRIPTION OF THE DRAWINGS

For a more complete understanding of the present invention, we now refer to the following detailed description of the embodiments illustrated in the accompanying drawings, wherein:

FIG. **1** is a timing diagram showing two spread spectrum signals that are despread by a single correlator at a base station receiver;

FIG. **2** is similar to FIG. **1** and shows the effect of multipath on the signals;

FIG. **3** is a timing diagram showing two spread spectrum signals that are despread by separate correlators at a base station receiver;

FIG. **4** is a timing diagram showing multiple access probes;

FIG. **5** shows a preferred embodiment of a mobile station access channel transmitter; and

FIGS. **6***a*–**6***b* is a flow chart showing the randomization methods of the present invention.

DESCRIPTION OF THE PREFERRED EMBODIMENTS

In FIG. **1**, two access channel signals **10** and **12** are despread at a receiver (not shown), which produces respective correlation spikes **14** and **16**. Signal **12** arrives shortly after signal **10** because, for example, the transmitter from which signal **12** emanates is further from the receiver than the transmitter from which signal **10** emanates. Signals **10** and **12** may be direct sequence spread spectrum signals of a CDMA cellular telephone system (not shown). In such an embodiment, the transmitters are access channel transmitters of mobile stations and the receiver is an access channel receiver of a base station.

If the difference between the arrival times of signal **10** and signal **12** at the base station receiver is less than one chip of the PN code with which they were modulated, the receiver may be unable to distinguish between signals **10** and **12**. This may be true in FIG. **1** when, for example, the two mobile stations are less than 120 meters (m) apart and the access channel has a chip rate of 1.2288 megahertz (MHz). A collision is said to occur when the receiver cannot distinguish the signals.

Each mobile station uses "PN randomization" to reduce the probability of a collision between its transmitted signal and those of other mobile stations on the same access channel. In PN randomization, a first mobile station transmitter may delay signal **10** to the location of delayed signal **18** and a second mobile station transmitter may delay signal **12** to the location of delayed signal **20**. A hash function is preferred for generating the delay because it enables the base station to determine the delay used by the mobile station. The base station can then calculate the range to the mobile station by measuring the total delay experienced by a message in arriving at the mobile station and subtracting the added PN randomization delay.

The hash function shown below (Equation 1) uses the electronic serial number (ESN) associated with the mobile station to produce the delay. The hash function produces a delay, RN, in the range of 0 to 512 chips of the PN code sequence generator that modulates the signal. Note that the maximum delay is much less than the delay provided by the other randomizations discussed below. The base station may provide a range index, PROBE_PN_RAN, to the mobile station during system initialization or at other times. The delay range, R, is defined as $_2$PROBE_PN_RAN.

$$RN=Rx((40503\times(L\oplus H\oplus D))mod\ 2^{16})/2^{16} \quad (1)$$

where:

R is the delay range;

L is the least significant 16 bits of the ESN;

H is the most significant 16 bits of the ESN;

D is a number 14 times the least significant 12 bits of the ESN;

X represents the largest integer less than or equal to X; $\oplus$ represents a bitwise exclusive-OR operation; and all other operations are integer arithmetic.

In FIG. **2**, two access channel signals **22** and **24** are despread by a receiver correlator (not shown), which produces respective correlation spikes **26** and **28**. As in FIG. **1**, signal **24** arrives shortly after signal **22**. Signals **22** and **24** are delayed using the method described above. The presence of multipath creates multipath correlation spikes **30** and **32** in signals **22** and **24** respectively. But for the presence of correlation spike **32** near correlation spike **26**, a diversity base station receiver could combine spikes **26** and **30** to improve reception of signal **22**. However, the receiver may not be able to distinguish signal **22** from signal **24** if multipath correlation spike **32** is received within one chip of correlation spike **26** or if multipath correlation spike **30** is

received within one chip of correlation spike 28. If the spikes 26, 28, 30, and 32 occur very near one another, the receiver cannot determine which spike is associated with which signal and therefore cannot combine them. However, if a PN randomization delay of one or more chips is added, for example, to signal 24 then signal 24 will be shifted towards the right in FIG. 2 and correlation spike 32 will not interfere with correlation spike 26. A base station diversity receiver could then assume that multipath components occurring close to one another, such as spikes 26 and 30, are associated with the same transmitted signal 22 and could therefore be combined. Similarly, a base station receiver could assume that spikes 28 and 32 are associated with signal 24 and combine them. Such assumptions are valid because multipath delays are typically less than one chip.

In FIG. 3, two access channel signals 34 and 36 are despread by two separate receiver correlators (not shown). Two mobile station transmitters (not shown) use "channel randomization" to modulate their respective signals 34 and 36 respectively with different PN codes, thereby requiring the base station receiver to use different correlators to demodulate them. Although signals 34 and 36 share the same frequency band, they are said to occupy different access channels because they are modulated using different PN codes. The receiver despreads signal 34 using the PN code corresponding to a first access channel and produces correlation spike 38, but signal 36 appears as noise to the receiver. This property, which allows a receiver to distinguish between signals 34 and 36 even in the presence of multipath, is well-known in spread spectrum communications. For each access channel that a base station receiver can receive simultaneously with other access channels, the base station must have a receiver that uses a PN code corresponding to that access channel.

In channel randomization, the transmitter randomly selects an access channel from a predetermined range, ACC_CHAN. The base station may provide this ACC_CHAN to the mobile station during system initialization or at other times during operation. Although the number of access channels from which a mobile station may choose is limited by hardware considerations and system throughput, a maximum of 32 is preferred.

Even if PN randomization and channel randomization are used, message collisions may occur if more than one transmitter selects the same access channel and transmits a message on it at the same time. The transmitters may use "backoff randomization" and "persistence" to further spread the messages over time to reduce collisions. The delays produced by the latter randomizations are much larger than that produced by PN randomization. The latter methods, as well as PN randomization and channel randomization, are discussed below with reference to the timing diagram shown in FIG. 4, the system shown in FIG. 5, and the flowchart shown in FIGS. 6a–6b.

In FIG. 5, a mobile station processor 100 executes the steps shown in FIGS. 6a–6b beginning at step 102 in an attempt to communicate with a base station (not shown). The process may be initiated whenever the mobile station (not shown) must send information to the base station. For example, a user may initiate a telephone call, which must be routed to the base station. The mobile station attempts to communicate by transmitting one or more "access probes" 104, 106, 108, 110, 112, 114, 116, 118 and 120 to the base station. An access probe consists of one message and has a maximum duration of one "slot." A slot is a predetermined interval of system time to which the base stations and mobile stations are synchronized in the CDMA cellular telephone system described above. Although the actual slot length is not critical, for purposes of comparing the duration and randomization of access probes to PN randomization, discussed above, it may be on the order of 60 ms. Thus, the PN randomization delay is a very small fraction of a slot.

In an access attempt, the mobile station continues to transmit access probes until one such probe is acknowledged by the base station. Thus, if a collision occurs, the message is not acknowledged, and the mobile station attempts another probe. A predetermined number of access probes is called an "access probe sequence." In FIG. 4, access probe sequence 122 consists of access probes 104, 106, and 108, access probe sequence 124 consists of access probes 110, 112, and 114, and access probe sequence 126 consists of access probes 116, 118, and 120.

The initiation of a call generates initiation signal 128, which is provided to processor 100. At step 130, processor 100 initializes a probe count, PROBE, to zero and an access probe sequence count, SEQ, to zero. At step 132, processor 100 computes the hash function described above to obtain the PN randomization delay, RN. Processor 100 provides delay signal 134, which corresponds to RN, to timing generator 136. Processor 100 provides the message data 138 to an encoder 140, which encodes it as described in the above-referenced U.S. patent and copending application. The encoded message data 142 is modulated with a PN long code 144, which is generated by a PN long code sequence generator 146. As discussed above, the particular PN long code 144 that is generated corresponds to the access channel to be used. This modulation is described in the above-referenced U.S. patent and copending applications. Although ExclusiveOR function 152 is shown for performing the modulation, any equivalent structure as known in communications arts, such as a multiplier, may be used. Finally, in response to delay signal 134, timing generator 136 provides timing signals 156 and 158 to these elements, which ultimately delays the transmitted signal 164.

At step 162, processor 100 determines whether the mobile station is attempting to respond to a communication from the base station or whether it is attempting to initiate a request for communication with the base station. A call initiated by a user is an example of a request attempt rather than a response attempt. If, as in FIG. 4, a request attempt is required, processor 100 proceeds to step 166. However, if a response attempt were required, the mobile station would perform a backoff randomization at step 168. In a backoff randomization, processor 100 generates a random number, RS, in the range of 0 to BKOFF+1, where BKOFF is a predetermined parameter. Then, at step 170 processor 100 would wait RS slots before proceeding to step 166. Processor 100 can count the slots to delay because it receives a slot count signal 172 from timing generator 136.

At step 166, processor 100 performs the same request/response test discussed above. If a request attempt is required, processor 100 performs a persistence test, which introduces a random delay of one or more slots between successive access probe sequences. In the persistence test, processor 100 generates a random probability, RP, at the beginning of a slot at step 174. A predetermined parameter, P, represents the probability that the next access probe sequence will be performed. At step 176, processor 100 compares P to RP. If RP is less than P, the persistence test passes and processor 100 proceeds to step 178. If the persistence test fails, processor 100 repeats the test immediately before the beginning of the next slot. If processor 100 determines that a response attempt is required rather than a request attempt at step 166, it proceeds to step 178. The

persistence test is not necessary during response attempts because, unlike request attempts, the base station can schedule its communications requiring responses such that multiple mobile stations are not likely to respond simultaneously.

In the example in FIG. 4, which represents a request attempt, processor **100** begins step **174** at the beginning of a slot at time **180**. Because the mobile station is attempting a request, it performs the persistence test. The test fails and is performed again immediately before the beginning of the slot at time **182**. On this second attempt, the test passes and processor **100** proceeds to step **178**.

Processor **100** performs a channel randomization at step **178**. It generates a random number RA in the range from zero to ACC_CHAN, which is a predetermined parameter representing the maximum number of access channels. RA corresponds to the access channel on which access probe sequence **122** will be transmitted. Processor **100** provides access channel selection signal **183** to PN code sequence generator **146**.

At step **184**, processor **100** initializes transmit power signal **186** to a predetermined initial level, INIT_PWR, which is provided to the power transmitter **188** in FIG. 5. In a CDMA cellular communications system or any spread-spectrum communications system, it is important to minimize the level of background noise, which is determined largely by the combined signals of many transmitters. A low level of background noise enables a receiver to more easily extract the desired spread-spectrum signal from the noise. To minimize the noise level, the present invention minimizes the power at which each mobile station transmits. INIT_PWR is set to a value that is below the level typically required for the base station to receive the message. Processor **100** preferably estimates INIT_PWR using measured power levels of signals previously or currently received from the base station. Although the receiver portion of the mobile station is not shown, it is described in one or more of the above-referenced U.S. patent and copending applications.

At step **190**, processor **100** disables the system access state timer (not shown), which may be used to provide processor **100** with an indication that the mobile station has not received a message it is expecting from the base station within a predetermined timeout period. Such a timer must be disabled during access attempts.

At step **192**, the message is transmitted in access probe **104** on the selected access channel, RA. As shown in FIG. 4, the PN randomization further delays the beginning of access probe **104** to time **194**, which occurs RN chips after time **182**. This delay, which is much less than a 60 ms slot, is greatly exaggerated in FIG. 4 for the purpose of clarity. The height of access probe **104** represents its relative power level. At the end of the transmission of access probe **104** at time **196**, processor **100** starts an internal acknowledgement timeout timer, TA. A predetermined timeout parameter, ACC_TMO, indicates the length of time that processor **100** must wait for an acknowledgement to probe **104**. If processor **100** receives an acknowledgement signal **198** within the timeout period, it proceeds to step **200** and ceases the access channel request attempt. It may then perform other actions that are not the subject of the present invention. When a time period of ACC_TMO has elapsed without processor **100** having received an acknowledgement, it proceeds to step **202**. In FIG. 4, timer TA expires at time **204**.

At step **206**, processor **100** increments PROBE, the value of its internal probe counter. At step **208** it compares PROBE to NUM_STEP, which is a predetermined parameter that indicates the number of access probes to be performed in each access probe sequence if no acknowledgement is received. In FIG. 4, NUM_STEP is three because access probe sequence **122** consists of three access probes **104**, **106**, and **108**. Therefore, processor **100** proceeds to step **210**.

At step **210**, processor **100** begins a probe backoff randomization. A probe backoff randomization is similar to the backoff randomization described above, the difference being that probe backoff randomization is performed between successive access probes of an access probe sequence, while backoff randomization is performed before each access probe sequence. The value of PROBE_BKOFF may or may not be equal to that of BKOFF. At step **210**, processor **100** generates a random number, RT, in the range from zero to PROBE_BKOFF+1, which is a predetermined parameter. At step **212**, processor **100** waits RT slots. For example, in FIG. 4 RT is "2" and processor **100** waits two slots until the slot beginning at time **214**.

At step **216**, processor **100** changes transmit power signal **186** to a number that causes power transmitter **188** to increase transmit power by a number of decibels (dB) equal to 0.5 times PWR_STEP, which is a predetermined parameter. Processor **100** then proceeds to step **190** and transmits access probe **106** at an increased power level on the same access channel, RA, at time **218**, which is RN chips after the beginning of the slot at time **214**. Processor **100** does not receive an acknowledgement within the timeout period from time **220** to time **222**. It generates a probe backoff, RT, of "1" and waits one slot at step **212** until the slot beginning at time **224**. Access probe **108** is transmitted at a further increased power level on the same access channel, RA, at time **226**, which is RN chips after the beginning of the slot at time **224**. Because no acknowledgement has been received from the base station by the end of the timeout period at time **230** and NUM_STEP probes have been transmitted, processor **100** proceeds to step **232**.

At step **232**, processor **100** enables the system access state timer (not shown) and proceeds to step **234**. Having completed transmission of access probe sequence **122**, processor **100** increments SEQ, the value of its internal access probe sequence counter. At step **236**, processor **100** compares SEQ to MAX_REQ_SEQ or MAX_RSP_SEQ, the former being a predetermined parameter for indicating the maximum number of access probe sequences to perform before aborting a request attempt and the latter being a predetermined parameter for indicating the maximum number of access probe sequences to perform before aborting a response attempt. If one of these maxima is reached, processor **100** proceeds to step **238**. It may then perform other actions that are not the subject of the present invention.

If the test at step **236** indicates that additional probe sequences are to be performed, processor **100** proceeds to step **240**, where it performs a backoff randomization as described above with reference to steps **168** and **170**. For example, in FIG. 4 processor **100** at time **230** generates a random number RS of "1" and waits one slot at step **242** until the slot beginning at time **248**. Processor **100** then returns to step **166** to begin access probe sequence **124**.

Processor **100** performs the steps for producing access probe sequence **124** in a like manner to those for producing access probe sequence **122**. If, as in the present example, a request attempt is required, processor **100** performs a persistence test at step **174** immediately before the slot beginning at time **248**. The test fails and is repeated immediately before the slot beginning at time **250**. This second test fails and is repeated immediately before the slot beginning at time **252**. The third test passes and processor **100** proceeds to step **178**.

Processor 100 performs a channel randomization at step 178. Because processor 100 randomly selects an access channel at the beginning of each access probe sequence, the access channel on which access probe sequence 124 is to be transmitted may not be the same as that on which access probe sequence 122 was transmitted. At step 184, processor 100 initializes transmit power signal 186, and at step 190 processor 100 disables the system access state timer.

At step 192, the message is transmitted in access probe 110, further delayed to time 254 from the slot beginning at time 252 by the PN randomization. Processor 100 proceeds to step 202 after the timeout period has elapsed at time 258 without having received acknowledgement signal 198.

In the probe backoff randomization at step 210, processor 100 produces a random number RT of "3" and processor 100 waits three slots at step 212 until the slot beginning at time 260. At step 192, processor 100 increases the power of signal 164 and transmits access probe 112 at the increased power level at time 262, which is RN chips after the beginning of the slot at time 260.

Processor 100 proceeds through the above steps a third time because it does not receive acknowledgement signal before the timeout period expires at time 266. It generates a probe backoff of two slots and waits until time 268. Access probe 114 is transmitted at time 270, which is RN chips after time 268. Transmission of access probe 114 without an acknowledgment by the timeout at time 274 completes access probe sequence 124, and processor 100 increments SEQ at step 234. Processor 100 then generates a backoff randomization of "1" at step 240. Processor 100 waits one slot at step 242 until the slot beginning at time 276. Processor 100 then returns to step 166 to begin access probe sequence 126.

If a request attempt is required, processor 100 performs a persistence test at step 174. In the example shown in FIG. 4, the persistence test fails three times before passing before the slot beginning at time 284. In access probe sequence 126, access probe 116 is transmitted at time 286, access probe 118 is transmitted at time 294, and access probe 120 is transmitted at time 302 as described above.

After the mobile station transmits access probe 304 and before the timeout timer has reached ACC_TMO, processor 100 receives acknowledgement signal 198 from the base station at time 306. In response to acknowledgement signal 198, processor 100 proceeds to step 200 and ceases the request attempt.

Although FIG. 4 illustrates a request attempt, a response attempt would be similar. In a response attempt, no persistence test would be performed before access probe 104. Instead, the backoff randomization at steps 168 and 170 would produce a backoff delay before access probe 104. Similarly, no persistence tests would be performed between access probe sequences 122 and 124 and between sequences 124 and 126.

Obviously, other embodiments and modifications of the present invention will occur readily to those of ordinary skill in the art in view of these teachings. Therefore, this invention is to be limited only by the following claims, which include all such other embodiments and modifications when viewed in conjunction with the above specification and accompanying drawings.

We claim:

1. An apparatus for reducing collisions between transmitted messages in a communications network, said apparatus having a unique identification code, said apparatus comprising:

processor means for providing a message;

a timing generator for providing a delay time in response to said unique identification code;

an encoder for delaying said message by said delay time; and

a transmitter for transmitting, at a time determined in accordance with said unique identification code, said delayed message to a receiver.

2. The apparatus described in claim 1, wherein:

said transmitted delayed message is a direct sequence spread spectrum signal spread using a PN code sequence having a chip rate; and

said delay time is equal to or greater than one chip.

3. An apparatus for reducing collisions between transmitted messages in a communications network, said apparatus having a unique identification code, said apparatus comprising:

processor means for providing a message and at least one random number;

a PN code sequence generator for randomly selecting a PN code sequence from a predetermined set of PN code sequences in response to a random number received from said processor means;

a timing generator for providing a delay time in response to said identification code;

an encoder for delaying said message by said delay time; and

a transmitter for transmitting said delayed message to a receiver, said transmitted delayed message being a direct sequence spread spectrum signal spread using said PN code sequence having a chip rate wherein said delay time is equal to or greater than one chip.

4. The apparatus described in claim 3, wherein said processor means is further

for receiving an acknowledgement indication in response to an acknowledgement,

for measuring the time between transmission of said message and said acknowledgement indication and for providing a timeout signal if said time exceeds a predetermined timeout parameter, and

for providing an additional message in response to said timeout signal.

5. The apparatus described in claim 4 wherein said processor is further

for counting said successive messages to provide a probe count, said probe count being reset upon reaching a predetermined maximum probe count; and

for providing a power level signal to said transmitter for increasing tile power of each said successive message, said power being a predetermined minimum when said probe count is reset.

6. The apparatus described in claim 5, wherein said processor increases said power of each said successive message by a predetermined increment.

7. The apparatus described in claim 6, wherein:

said processor means inserts a backoff delay between said successive messages in response to said timeout signal, said backoff delay corresponding to a second random number.

8. The apparatus described in claim 7, wherein:

said processor means is inhibited from providing said message when said probe counter is reset and a third random number is within a predetermined persistence range.

9. A method for reducing collisions between messages in a communications network having a plurality of transmitters

and at least one receiver, each of said transmitters having a unique identification code, said method comprising the repeated steps of:

generating a message;

delaying said message by a delay time corresponding to said identification code; and

transmitting said delayed message at a time determined in accordance with said unique identification code, said transmitted message having a power level.

10. The method for reducing collisions between messages described in claim 9, wherein:

said transmitted delayed message is a direct sequence spread spectrum signal spread using a PN code sequence having a chip rate; and

said delay time is equal to or greater than one chip.

11. A method for reducing collisions between messages in a communications network having a plurality of transmitters and at least one receiver, each said transmitter having a unique identification code, comprising the repeated steps of:

randomly selecting a PN code sequence from a predetermined set of PN code sequences;

generating a message;

delaying said message by a delay time corresponding to said identification code;

modulating said delayed message with said PN code sequence; and

transmitting said delayed message, said transmitted message having a power level.

12. The method for reducing collisions between messages described in claim 11, further comprising the step of:

monitoring an acknowledgement signal from said receiver during a predetermined timeout period.

13. The method for reducing collisions between messages described in claim 12, further comprising, before said transmitting step, the steps of:

generating a first random number;

selecting a backoff time period from a predetermined range in response to said first random number; and

waiting said backoff time period.

14. The method for reducing collisions between messages described in claim 13, further comprising the steps of:

increasing said power level by a predetermined power increment;

incrementing a probe count;

comparing said probe count to a predetermined probe sequence length; and

setting said power level to a predetermined initial value when said probe count equals said predetermined probe sequence length.

15. The method for reducing collisions between messages described in claim 14, further comprising the steps of:

repeatedly generating a second random number and comparing it to a predetermined persistence parameter until said second random number is within a range corresponding to said predetermined persistence parameter.

16. In a communications device, an apparatus for reducing collisions between messages of said communications device and other communication devices in a communications network, said apparatus comprising:

processor means for providing a timing signal in accordance with a unique identification code, and for providing a message in response to said timing signal; and

transmitter means for transmitting said message at a time determined in accordance with said unique identification code.

17. The apparatus of claim 16 further comprising an encoder for encoding said message for transmission according to a predetermined coding format.

18. The apparatus of claim 16 wherein said processor means is further for encoding said message for transmission according to a predetermined coding format.

19. The apparatus of claim 18 wherein said processor means is further for generating a first random number within a backoff delay range of numbers and for providing a second timing signal responsive to said first random number and said delay signal and for further delaying the provision of said message responsive to said second timing signal.

20. The apparatus of claim 19 wherein said processor means is further for generating at least one second random number within a random probability range of numbers, comparing said second random number with a predetermined parameter, inhibiting the provision of said message if said second random number is less than said predetermined parameter, and repeating said steps of generating said second random number, comparing said second random number with said predetermined parameter, and inhibiting the provision of said message until one of said at least one second random number exceeds said predetermined parameter.

21. The apparatus of claim 20 wherein said processor means is further for randomly selecting a channel number from a set of access channel numbers, providing said selected channel number, and providing a PN code in accordance with said channel number, said apparatus further comprising:

spreading means for receiving said PN code and direct sequence spreading said encoded message in accordance with said PN code.

22. The apparatus of claim 21 wherein said processor means is further for receiving a message acknowledged signal, providing a retransmission signal if said message acknowledged signal is not received within a predetermined time duration, generating at least one additional random number within a probe backoff range of numbers responsive to said retransmission signal, providing at least one additional timing signal in accordance with said at least one additional random number, and providing at least one additional message responsive to said at least one additional timing signal, repeating said steps of generating at least one additional random number, providing said at least one additional timing signal, and providing said at least one additional message until said message acknowledged signal is received, and maintaining a probe count equal to the number of said at least one additional message provisions.

23. The apparatus of claim 22 wherein said processor means is further for providing a transmission power signal in accordance with said probe count; and wherein said transmitter is responsive to said power signal.

24. The apparatus of claim 23 wherein said processor means is further for resetting said probe count when probe count is equal to a predetermined probe sequence number.

25. The apparatus of claim 24 wherein said processor means is further for generating a third random number from a backoff range of numbers, providing a sequence message responsive to said third random number.

26. The apparatus of claim 25 wherein said processor means is further for randomly selecting a second channel number from a second set of access channel numbers, providing a PN code in accordance with said second channel number; and

wherein said spreading means is further for receiving said PN code and direct sequence spreading said sequence message in accordance with said PN code.

27. The apparatus of claim 20 wherein said processor is further for receiving a message acknowledged signal, providing a retransmission signal if said message acknowledged signal is not received within a predetermined time duration from the time of said message transmission, generating at least one additional random number within a probe backoff range of numbers responsive to said retransmission signal, providing at least one additional timing signal in accordance with said at least one additional random number, and providing at least one additional message responsive to said at least one additional timing signal, repeating said steps of generating at least one additional random number, providing said at least one additional timing signal, and providing said at least one additional message until said message acknowledged signal is received, and maintaining a probe count equal to the number of said at least one additional message provisions.

28. The apparatus of claim 27 wherein said processor means is further for providing a transmission power signal in accordance with said probe count; and wherein said transmitter is responsive to said power signal.

29. The apparatus of claim 28 wherein said processor means is further for resetting said probe count when probe count is equal to a predetermined probe sequence number.

30. The apparatus of claim 29 wherein said processor means is further for generating a third random number from a backoff range of numbers, providing a sequence message responsive to said third random number.

31. In a communications device, an apparatus for reducing collisions between messages of said communications device and other communication devices in a communications network said apparatus comprising:

processor means for providing a timing signal in accordance with a unique identification code, and for providing a message in response to said timing signal, wherein said processor means further includes means for generating a first random number within a backoff delay range of numbers and means for providing a second timing signal responsive to said first random number and said timing signal and means for further delaying the provision of said message in response to said second timing signal;

an encoder for encoding said message for transmission according to a predetermined coding format; and

transmitter means for transmitting said message.

32. The apparatus of claim 31 wherein said processor means is further for generating at least one second random number within a random probability range of numbers, comparing said second random number with a predetermined parameter, inhibiting the provision of said message if said second random number is less than said predetermined parameter, and repeating said steps of generating said second random number, comparing said second random number with said predetermined parameter, and inhibiting the provision of said message until one of said at least one second random number exceeds said predetermined parameter.

33. The apparatus of claim 32 wherein said processor means is further for randomly selecting a channel number from a set of access channel numbers and for providing said selected channel number, said apparatus further comprising:

PN code generator means for receiving said channel number and providing a PN code in accordance with said channel number; and

spreading means for receiving said PN code and direct sequence spreading said encoded message in accordance with said PN code.

34. The apparatus of claim 33 wherein said processor means is further for receiving a message acknowledged signal, providing a retransmission signal if said message acknowledged signal is not received within a predetermined time-duration from the time of said message transmission, generating at least one additional random number within a probe backoff range of numbers responsive to said retransmission signal, providing at least one additional timing signal in accordance with said at least one additional random number, and providing at least one additional message responsive to said at least one additional timing signal, repeating said steps of generating at least one additional random number, providing said at least one additional timing signal, and providing said at least one additional message until said message acknowledged signal is received, and maintaining a probe count equal to the number of said at least one additional message provisions.

35. The apparatus of claim 34 wherein said processor means is further for providing a transmission power signal in accordance with said probe count; and wherein said transmitter is responsive to said power signal.

36. The apparatus of claim 35 wherein said processor means is further for resetting said probe count when probe count is equal to a predetermined probe sequence number.

37. The apparatus of claim 36 wherein said processor means is further for generating a third random number from a backoff range of numbers and providing a sequence message responsive to said third random number.

38. The apparatus of claim 37, wherein said processor means is further for randomly selecting a second channel number from a second set of access channel numbers;

wherein said PN code generator means is further for receiving said channel number and providing a PN code in accordance with said second channel number; and

wherein said spreading means is further for receiving said PN code and direct sequence spreading said sequence message in accordance with said PN code.

39. The apparatus of claim 32 wherein said processor means is further for receiving a message acknowledged signal, providing a retransmission signal if said message acknowledged signal is not received within a predetermined time duration from the time of said message transmission, generating at least one additional random number within a probe backoff range of numbers responsive to said retransmission signal, providing at least one additional timing signal in accordance with said at least one additional random number, and providing at least one additional message responsive to said at least one additional timing signal, repeating said steps of generating at least one additional random number, providing said at least one additional timing signal, and providing said at least one additional message until said message acknowledged signal is received, and maintaining a probe count equal to the number of said at least one additional message provisions.

40. The apparatus of claim 39 wherein said processor means is further for providing a transmission power signal in accordance with said probe count; and wherein said transmitter is responsive to said power signal.

41. The apparatus of claim 40 wherein said processor means is further for resetting said probe count when probe count is equal to a predetermined probe sequence number.

42. The apparatus of claim 41 wherein said processor means is further for generating a third random number from a backoff range of numbers, providing a sequence message responsive to said third random number.

43. A circuit for reducing collisions between messages of a communications device with other communications

devices in a communications network, said circuit comprising:

a processor circuit having an output for providing a timing signal determined in accordance with a unique identification code and having a second output for providing a message responsive to said timing signal; and

a transmitter having an input coupled to said processor circuit second output, said transmitter for transmitting said message at a time determined in accordance with said unique identification code.

44. The circuit of claim 43 wherein said processor is further for encoding said message for transmission according to a predetermined coding format.

45. A circuit for reducing collisions between messages of a communications device with other communications devices in a communications network, said circuit comprising:

a processor circuit having an output for providing a timing signal determined in accordance with an identification code and having means for encoding a message for transmission as an encoded message according to a predetermined coding format, said processor circuit further including a second output for providing said encoded message responsive to said timing signal and means for generating a first random number within a backoff delay range of numbers and means for providing a second timing signal responsive to said first random number and said timing signal and means for further delaying the provision of said message responsive to said second timing signal; and

a transmitter having an input coupled to said processor circuit second output.

46. The circuit of claim 45 wherein said processor circuit is further for generating at least one second random number within a random probability range of numbers, comparing said second random number with a predetermined parameter, inhibiting the provision of said message if said second random number is less than said predetermined parameter, and repeating said steps of generating said second random number, comparing said second random number with said predetermined parameter, and inhibiting the provision of said message until one of said at least one second random number exceeds said predetermined parameter.

47. The circuit of claim 46 wherein said processor circuit is further for randomly selecting a channel number from a set of access channel numbers, providing said selected channel number, and providing a PN code in accordance with said channel number, and said circuit further comprising a spreading circuit for receiving said PN code and direct sequence spreading said encoded message in accordance with said PN code.

48. The circuit of claim 47 wherein said processor is further for receiving a message acknowledged signal, providing a retransmission signal if said message acknowledged signal is not received within a predetermined time duration from the time of said message transmission, generating at least one additional random number within a probe backoff range of numbers responsive to said retransmission signal, providing at least one additional timing signal in accordance with said at least one additional random number, and providing at least one additional message responsive to said at least one additional timing signal, repeating said steps of generating at least one additional random number, providing said at least one additional timing signal, and providing said at least one additional message until said message acknowledged signal is received, and maintaining a probe count equal to the number of said at least one additional message provisions.

49. The circuit of claim 48 wherein said processor circuit is further for providing a transmission power signal in accordance with said probe count; and wherein said transmitter is responsive to said power signal.

50. The circuit of claim 49 wherein said processor circuit is further for resetting said probe count when probe count is equal to a predetermined probe sequence number.

51. The circuit of claim 50 wherein said processor circuit is further for generating a third random number from a backoff range of numbers, providing a sequence message responsive to said third random number.

52. The circuit of claim 51 wherein said processor circuit is further for randomly selecting a second channel number from a second set of access channel numbers, providing a PN code in accordance with said second channel number; and wherein said spreading circuit is further for receiving said PN code and direct sequence spreading said sequence message in accordance with said PN code.

53. The circuit of claim 46 wherein said processor is further for receiving a message acknowledged signal, providing a retransmission signal if said message acknowledged signal is not received within a predetermined time duration from the time of said message transmission, generating at least one additional random number within a probe backoff range of numbers responsive to said retransmission signal, providing at least one additional timing signal in accordance with said at least one additional random number, and providing at least one additional message responsive to said at least one additional timing signal, repeating said steps of generating at least one additional random number, providing said at least one additional timing signal, and providing said at least one additional message until said message acknowledged signal is received, and maintaining a probe count equal to the number of said at least one additional message provisions.

54. The circuit of claim 53 wherein said processor circuit is further for providing a transmission power signal in accordance with said probe count; and wherein said transmitter is responsive to said power signal.

55. The circuit of claim 54 wherein said processor circuit is further for resetting said probe count when probe count is equal to a predetermined probe sequence number.

56. The circuit of claim 55 wherein said processor circuit is further for generating a third random number from a backoff range of numbers, providing a sequence message responsive to said third random number.

57. A method for reducing collisions between messages in a communications network wherein a time period is divided into slots of predetermined durations and each transmitter has a unique identification code, said method comprising the steps of:

(a) providing a message;

(b) generating a random number from a first range of numbers; and

(c) delaying said message by a number of said slots equal to said random number.

58. The method of claim 57 further comprising the steps of:

(d) generating at least one additional second random number in accordance with a predetermined probability distribution;

(e) comparing said second random number against a predetermined random probability parameter;

(f) inhibiting said provision of said message if said generated second random number is less than said random probability parameter; and

(g) repeating said steps (d)–(f) until said additional random number exceeds said random probability parameter.

59. The method of claim 58 further comprising the steps of:

(h) generating a second random number from a second range of random numbers;

(i) determining a PN code in accordance with said second random number; and

(j) direct sequence spreading said message in accordance with said second random number.

60. The method of claim 59 further comprising the steps of:

(k) transmitting said delayed message at an initial power level;

(l) receiving a message acknowledged signal;

(m) generating at least one second additional random number if message acknowledged signal is not received within a time out time period duration;

(n) providing at least one additional message;

(o) delaying said additional message by a number of slots equal to said second additional random number;

(p) transmitting said message at an increased power level wherein said increased power level is determined as the power level of the previous transmission plus a predetermined increase

(q) repeating said steps (m)–(p) until a message acknowledged signal is received.

61. The method of claim 60 further comprising the steps of:

(r) counting the number of said transmitted additional messages;

(s) resetting said count if said number of said transmitted additional messages equals a sequence count;

(t) increment a sequence count;

(u) generating a fourth random number from a fourth range of numbers if said number of said transmitted additional messages equals a sequence count;

(v) providing a second additional message if said number of said transmitted additional messages equals a sequence count;

(w) delaying said second additional message by a number slots equal to said fourth random number; and

(x) repeating steps (d)–(q) until said sequence count equals a predetermined maximum count.

62. In a spread spectrum communications system in which a plurality of remote stations communicate messages to a base station, an apparatus in each remote station for reducing collisions between messages of said remote stations, said system comprising:

processor means for providing a timing signal, wherein said timing signal is determined in accordance with a unique identification code and for providing said message responsive to said timing signal;

spreading means for direct sequence spreading said message; and

transmitter means for transmitting said direct sequence spread message at a time determined in accordance with said unique identification code.

63. The apparatus of claim 62 wherein said processor means is further for encoding said message for transmission according to a predetermined coding format.

64. In a spread spectrum communications system in which a plurality of remote stations communicate messages to a base station, an apparatus in each remote station for reducing collisions between messages of said remote stations, said system comprising:

processor means for providing a timing signal, wherein said timing signal is determined in accordance with a unique identification code and for providing said message responsive to said timing signal, said processor means further including means for encoding said message for transmission according to a predetermined coding format and means for generating a first random number within a backoff delay range of numbers and means for providing a second timing signal responsive to said first random number and said timing signal and means for further delaying the provision of said message responsive to said second timing signal;

spreading means for direct sequence spreading said message; and

transmitter means for transmitting said direct sequence spread message.

65. The apparatus of claim 64 wherein said processor means is further for generating at least one second random number within a random probability range of numbers, comparing said second random number with a predetermined parameter, inhibiting the provision of said message if said second random number is less than said predetermined parameter, and repeating said steps of generating said second random number, comparing said second random number with said predetermined parameter, and inhibiting the provision of said message until one of said at least one second random number exceeds said predetermined parameter.

66. The apparatus of claim 65 wherein said processor means is further for randomly selecting a channel number from a set of access channel numbers, providing said selected channel number, and providing a PN code in accordance with said channel number; and wherein said spreading means is responsive to said PN code.

67. The apparatus of claim 66 wherein said processor means is further for receiving a message acknowledged signal, providing a retransmission signal if said message acknowledged signal is not received within a predetermined time duration from said transmission of direct sequence spread message, generating at least one additional random number within a probe backoff range of numbers responsive to said retransmission signal, providing at least one additional timing signal in accordance with said at least one additional random number, and providing at least one additional message responsive to said at least one additional timing signal, repeating said steps of generating at least one additional random number, providing said at least one additional timing signal, and providing said at least one additional message until said message acknowledged signal is received, and maintaining a probe count equal to the number of said at least one additional message provisions.

68. The apparatus of claim 67 wherein said processor means is further for providing a transmission power signal in accordance with said probe count; and wherein said transmitter is responsive to said power signal.

69. The apparatus of claim 68 wherein said processor means is further for resetting said probe count when probe count is equal to a predetermined probe sequence number.

70. The apparatus of claim 69 wherein said processor means is further for generating a third random number from a backoff range of numbers, providing a sequence message responsive to said third random number.

71. The apparatus of claim 70 wherein said processor means is further for randomly selecting a second channel number from a second set of access channel numbers,

providing a PN code in accordance with said second channel number; and

wherein said spreading means is further for receiving said PN code and direct sequence spreading said sequence message in accordance with said PN code.

72. In a spread spectrum communications system in which a plurality of remote stations each having a unique identification code communicate messages to a base station, an apparatus in each remote station for reducing collisions between messages of said remote stations, said apparatus comprising:

a processor for determining a delay value in accordance with said unique identification code and having an output for providing said message responsive to said delay value; and

a transmitter having an input coupled to said processor second output and an output for transmitting said message at a time determined in accordance with said unique identification code.

73. The apparatus of claim 72 further comprising an encoder disposed between said processor and said transmitter having an input coupled to said processor output and having an output coupled to said transmitter input.

74. The apparatus of claim 73 further comprising a spreading circuit disposed between said encoder and said transmitter having an input coupled to said encoder output and an output coupled to said transmitter input.

75. In a spread spectrum communications system in which a plurality of remote stations each having a unique identification code communicate messages to a base station, an apparatus in each remote station for reducing collisions between messages of said remote stations, said apparatus comprising:

a processor for determining a delay value in accordance with said unique identification code and having an output for providing said message responsive to said delay value, said processor further comprising a second output for providing a PN code;

an encoder having an input coupled to said processor output and having an output;

a spreading circuit having an input coupled to said encoder output, a second input coupled to said processor second output and an output; and

a transmitter having an input coupled to said spreading circuit output and an output for transmitting said message.

76. The apparatus of claim 75 further wherein said processor further has a second input for receiving a message acknowledged signal.

77. The apparatus of claim 76 wherein said processor further has a third output for providing a delay signal indicative of said delay value.

78. The apparatus of claim 77 wherein said encoder further has a second input coupled to said third processor output.

79. The apparatus of claim 78 further comprising a PN sequence generator disposed between said processor and said spreading circuit having an input coupled to said processor second output and an output coupled to said spreading circuit second input.

80. The apparatus of claim 79 wherein said PN sequence generator further has a second input coupled to said processor third output.

81. The apparatus of claim 80 further comprising timing generator disposed between said processor and said encoder having an input coupled to said processor third output and an output coupled to said encoder second input.

82. The apparatus of claim 81 wherein said timing generator is further disposed between said processor and said PN sequence generator having an input coupled to said processor third output and an output coupled to said PN sequence generator second input.

83. The apparatus of claim 82 further comprising an antenna coupled having an input coupled to said transmitter output.

84. The apparatus of claim 83 wherein said processor further has a second input for receiving a call initiate signal.

85. The apparatus of claim 80 wherein said processor comprises a microprocessor and a timing generator.

* * * * *

US005257283A

United States Patent [19]

Gilhousen et al.

[11] Patent Number: 5,257,283

[45] Date of Patent: Oct. 26, 1993

[54] SPREAD SPECTRUM TRANSMITTER POWER CONTROL METHOD AND SYSTEM

[75] Inventors: Klein S. Gilhousen; Roberto Padovani, both of San Diego; Charles E. Wheatley, III, Del Mar, all of

[73] Assignee: Qualcomm Incorporated, San Diego, Calif.

[21] Appl. No.: 749,249

[22] Filed: Aug. 23, 1991

Related U.S. Application Data

[63] Continuation of Ser. No. 433,031, Nov. 7, 1989, Pat. No. 5,056,109.

[51] Int. Cl.[5] H04L 27/30; H04J 13/00; H04B 7/204

[52] U.S. Cl. 375/1; 370/18; 379/59; 455/33.1; 455/38.3; 455/54.1; 455/69; 380/34

[58] Field of Search 455/33, 54, 56, 69, 455/33.1, 54.1, 54.2, 56.1, 69, 38.3; 370/18, 50; 379/58, 59

[56] References Cited

U.S. PATENT DOCUMENTS

3,925,782	12/1975	Anderl et al.	455/69 X
4,112,257	9/1978	Frost	379/60
4,123,718	10/1978	Lampert et al.	375/1
4,193,031	3/1980	Cooper	370/50 X
4,222,115	9/1980	Cooper et al.	375/1
4,225,976	9/1980	Osborne et al.	455/226
4,495,648	1/1985	Giger	445/73
4,580,262	4/1986	Naylor et al.	371/5.5
4,613,990	9/1986	Halpern	455/33
4,641,322	2/1987	Hasegawa	375/1
4,672,658	6/1987	Kavehrad et al.	379/63
4,765,753	8/1988	Schmidt	379/60
4,777,653	10/1988	Bonnerot et al.	455/69
4,811,421	3/1989	Havel et al.	455/69
4,868,795	9/1989	McDavid et al.	455/69 X
4,870,698	9/1989	Katsuyama et al.	455/69 X
4,901,307	2/1990	Gilhousen et al.	375/1 X

Primary Examiner—Bernarr E. Gregory
Attorney, Agent, or Firm—Russell B. Miller

[57] ABSTRACT

A power control system for a cellular mobile telephone system in which system users communicate information signals between one another via at least one cell site using code division multiple access spread spectrum communication signals. The power control system controls transmission signal power for each cellular mobile telephone in the cellular mobile telephone system wherein each cellular mobile telephone has an antenna, transmitter and receiver and each cell-site also has an antenna, transmitter and receiver. Cell-site transmitted signal power is measured as received at the mobile unit. Transmitter power is adjusted at the mobile unit in an opposite manner with respect to increases and decreases in received signal power. A power control feedback scheme may also be utilized. At the cell-site communicating with the mobile unit, the mobile unit transmitted power is measured as received at the cell-site. A command signal is generated at the cell-site and transmitted to the mobile unit for further adjusting mobile unit transmitter power corresponding to deviations in the cell site received signal power. The feedback scheme is used to further adjust the mobile unit transmitter power so as to arrive at the cell-site at a desired power level.

30 Claims, 5 Drawing Sheets

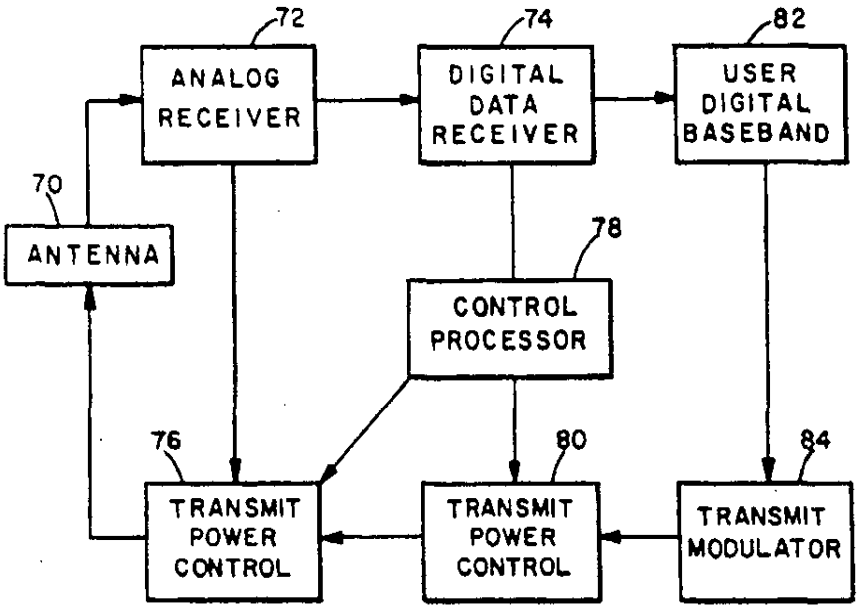

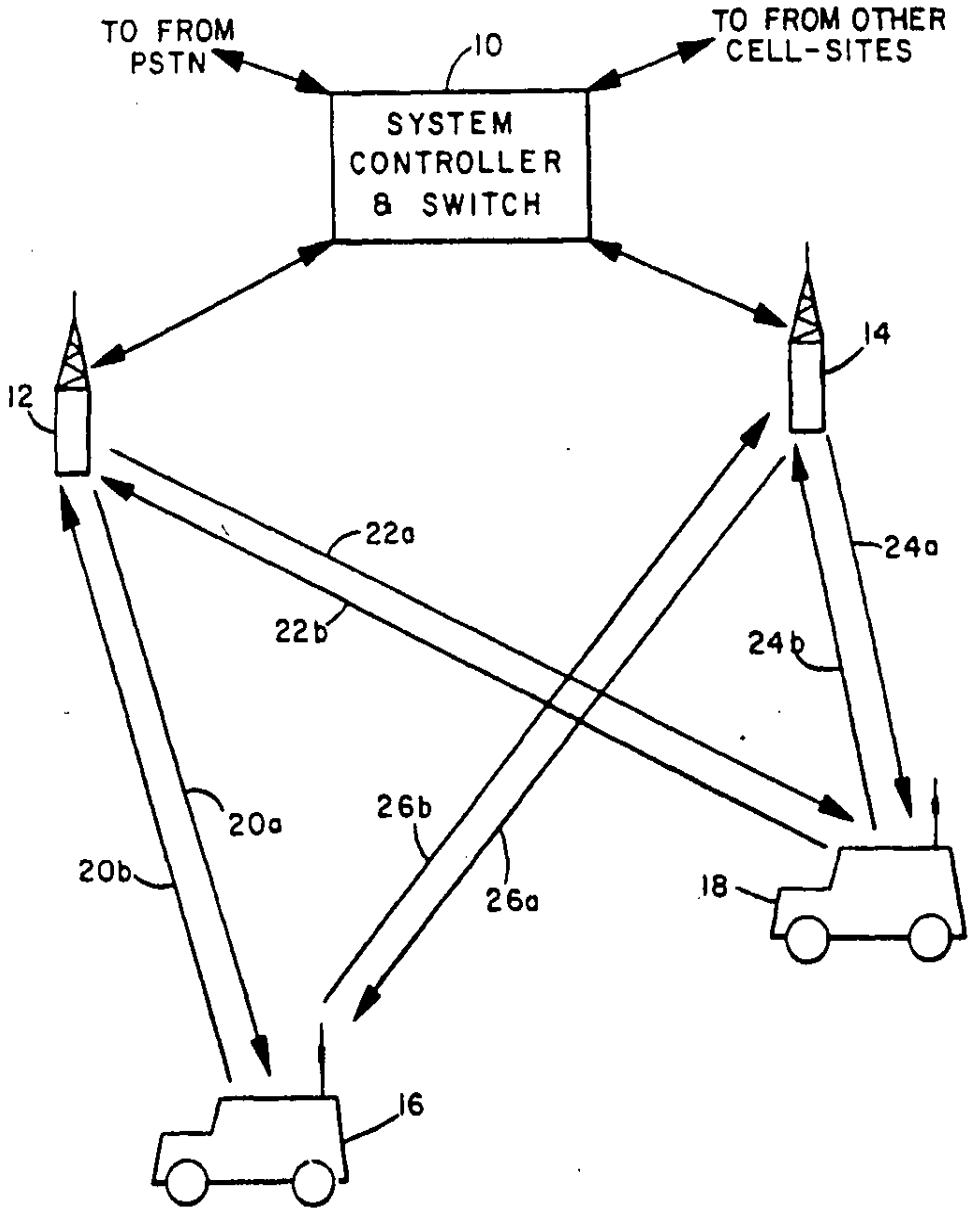
TO FROM PSTN
10
TO FROM OTHER CELL-SITES
SYSTEM CONTROLLER & SWITCH
12
14
22a
22b
24a
24b
20a
20b
26b
26a
18
16

FIG. 1

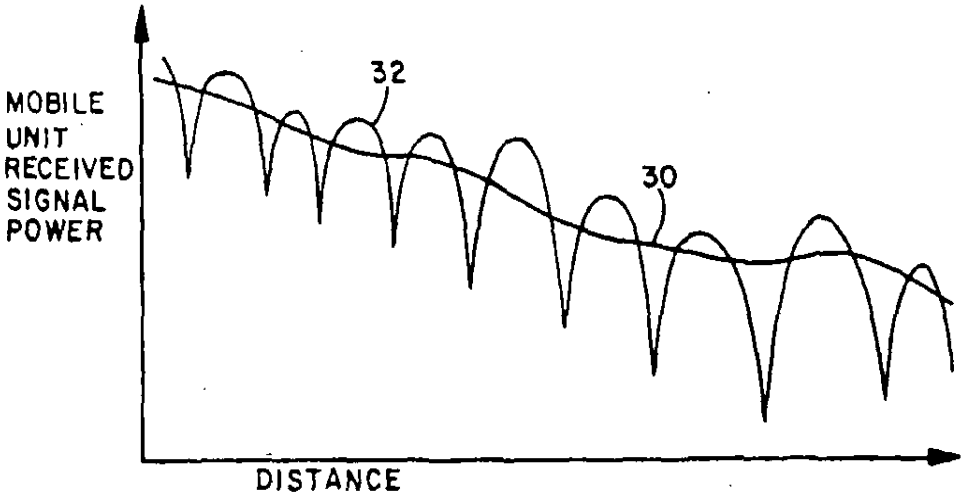
MOBILE
UNIT
RECEIVED
SIGNAL
POWER
32
30
DISTANCE

FIG. 2A

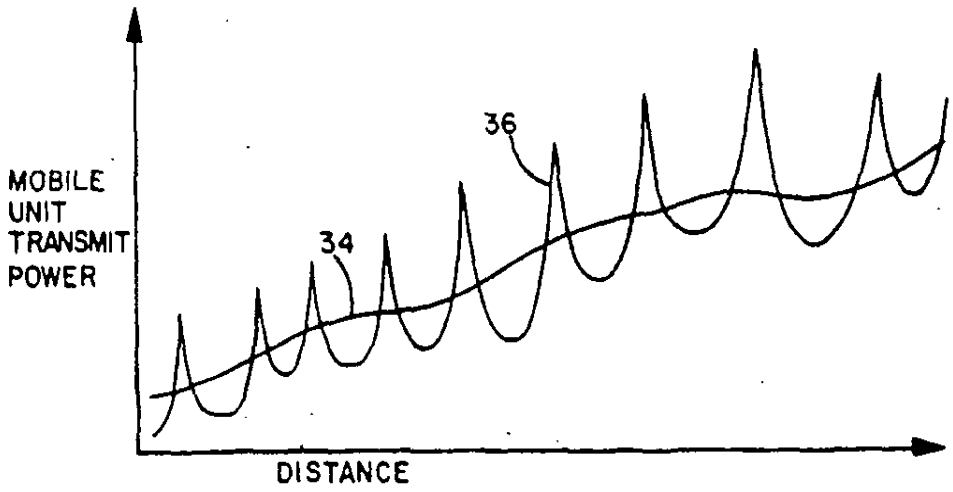
MOBILE
UNIT
TRANSMIT
POWER
36
34
DISTANCE

FIG. 2B

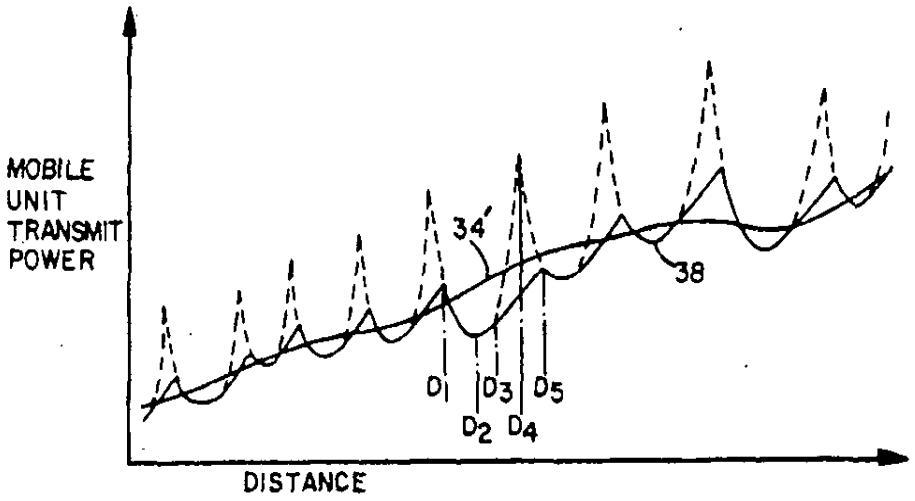
MOBILE
UNIT
TRANSMIT
POWER
34'
38
D1
D3
D5
D2
D4
DISTANCE

FIG. 2C

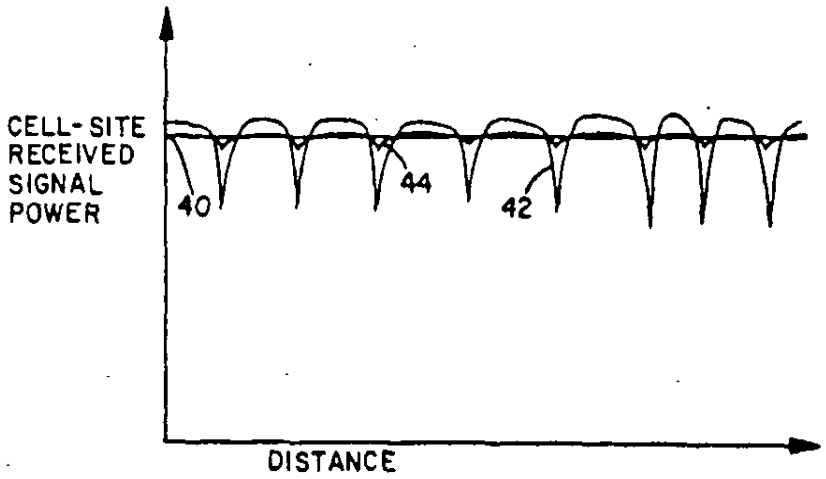
CELL-SITE
RECEIVED
SIGNAL
POWER
40
44
42
DISTANCE

FIG. 2D

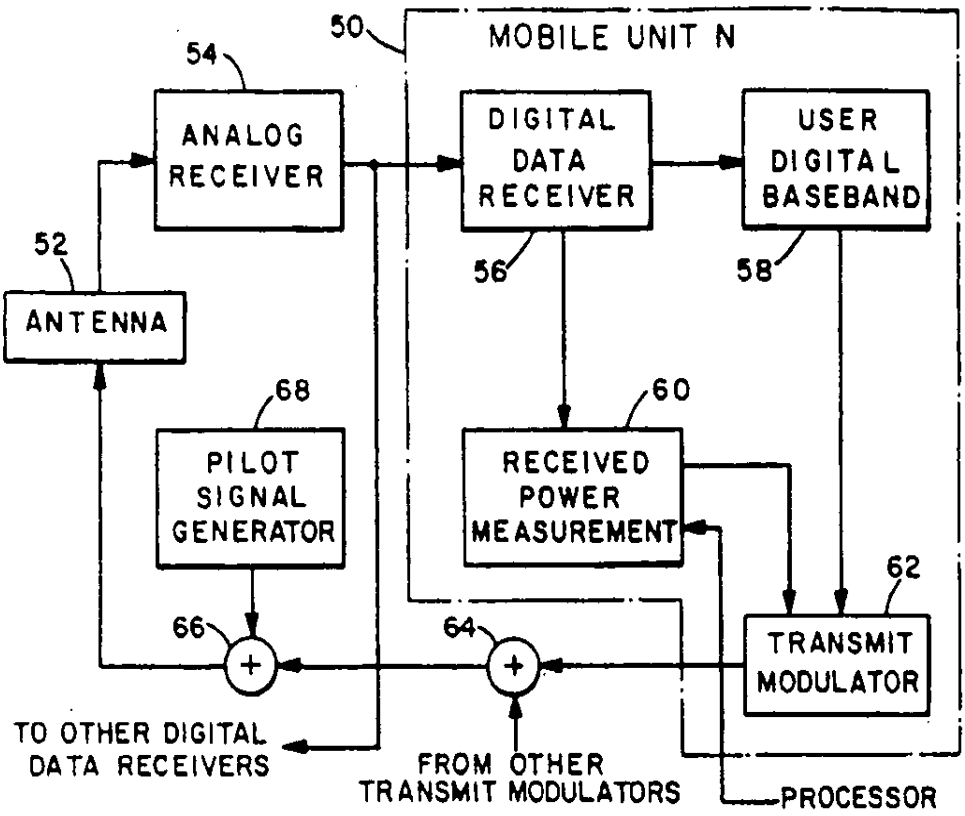
50
MOBILE UNIT N
54
ANALOG RECEIVER
DIGITAL DATA RECEIVER
USER DIGITAL BASEBAND
52
ANTENNA
56
58
68
PILOT SIGNAL GENERATOR
60
RECEIVED POWER MEASUREMENT
62
TRANSMIT MODULATOR
66
64
TO OTHER DIGITAL DATA RECEIVERS
FROM OTHER TRANSMIT MODULATORS
PROCESSOR

FIG. 3

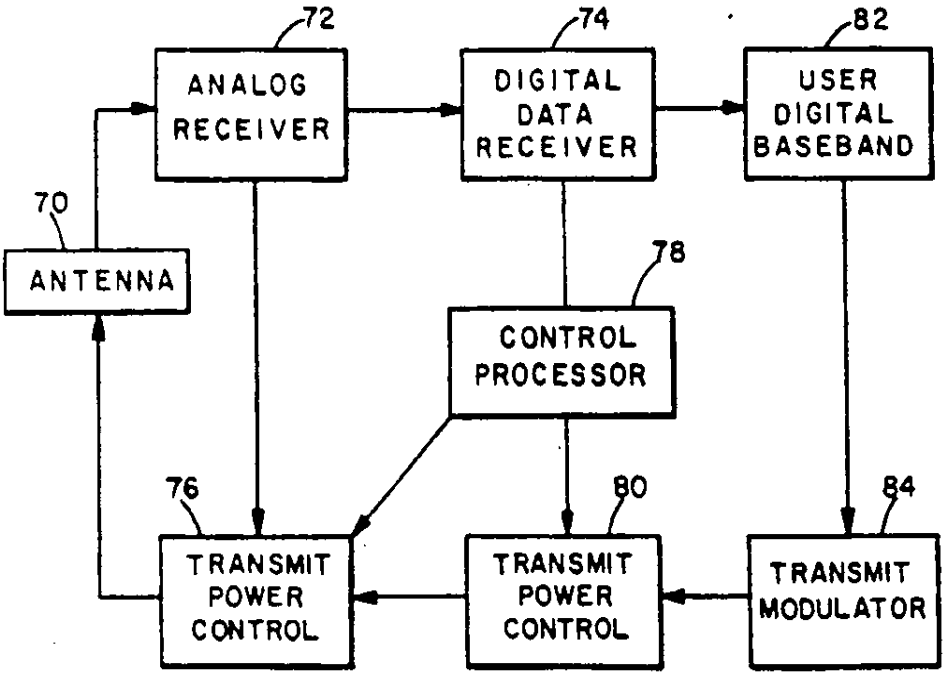
72
ANALOG RECEIVER
74
DIGITAL DATA RECEIVER
82
USER DIGITAL BASEBAND
70
ANTENNA
78
CONTROL PROCESSOR
76
TRANSMIT POWER CONTROL
80
TRANSMIT POWER CONTROL
84
TRANSMIT MODULATOR

FIG. 4

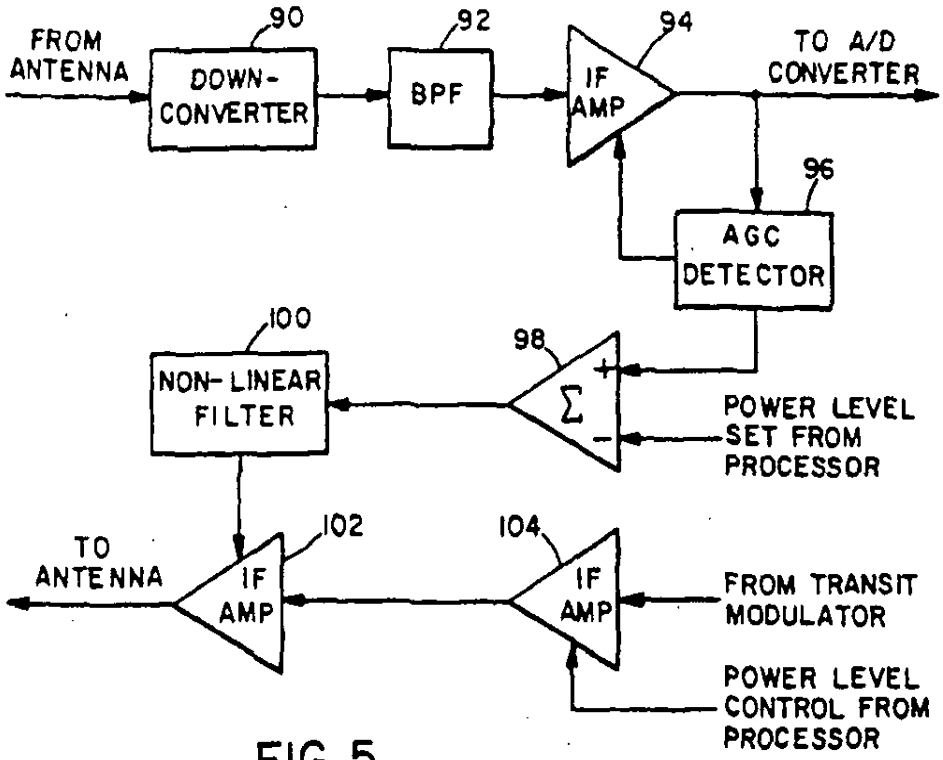
FROM ANTENNA
90
DOWN-CONVERTER
92
BPF
94
IF AMP
TO A/D CONVERTER
96
AGC DETECTOR
100
NON-LINEAR FILTER
98
Σ
+
-
POWER LEVEL SET FROM PROCESSOR
TO ANTENNA
102
IF AMP
104
IF AMP
FROM TRANSIT MODULATOR
POWER LEVEL CONTROL FROM PROCESSOR

FIG. 5

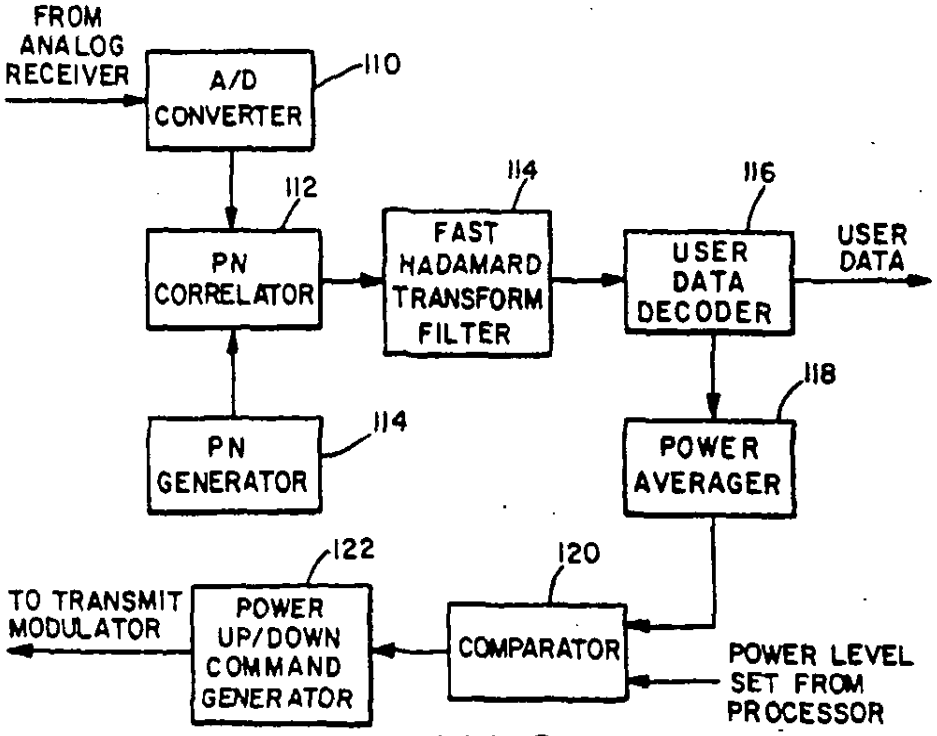
FROM ANALOG RECEIVER
A/D CONVERTER
110
112
PN CORRELATOR
114
FAST HADAMARD TRANSFORM FILTER
116
USER DATA DECODER
USER DATA
118
PN GENERATOR
114
POWER AVERAGER
122
TO TRANSMIT MODULATOR
POWER UP/DOWN COMMAND GENERATOR
120
COMPARATOR
POWER LEVEL SET FROM PROCESSOR

FIG. 6

SPREAD SPECTRUM TRANSMITTER POWER CONTROL METHOD AND SYSTEM

This is a continuation of application Ser. No. 07/433,031, filed Nov. 7, 1989, now

BACKGROUND OF THE INVENTION

I. Field of the Invention

The present invention relates to cellular mobile telephone systems. More specifically, the present invention relates to a novel and improved method and apparatus for controlling transmitter power in a code division multiple access (CDMA) cellular mobile telephone system.

II. Description of the Related Art

The use of code division multiple access (CDMA) modulation techniques is one of several techniques for facilitating communications in which a large number of system users are present. Although other techniques such as time division multiple access (TDMA), frequency division multiple access (FDMA) and AM modulation schemes such as amplitude companded single sideband (ACSSB) are known, CDMA has significant advantages over these other techniques. The use of CDMA techniques in a multiple access communication system is disclosed in U.S. patent application Ser. No. 06/921,261, filed Oct. 17, 1986, entitled "SPREAD SPECTRUM MULTIPLE ACCESS COMMUNICATION SYSTEM USING SATELLITE OR TERRESTRIAL REPEATERS", now U.S. Pat. No. 4,901,307 assigned to the assignee of the present invention, the disclosure thereof incorporated by reference.

In the just mentioned patent, a multiple access technique is disclosed where a large number of mobile telephone system users each having a transceiver communicate through satellite repeaters or terrestrial base stations (also known as cell-sites stations, or for short cell-sites) using code division multiple access (CDMA) spread spectrum communication signals. In using CDMA communications, the frequency spectrum can be reused multiple times thus permitting an increase in system user capacity. The use of CDMA results in a much higher spectral efficiency than can be achieved using other multiple access techniques. In a CDMA system, increases in system capacity may be realized by controlling the transmitter power of each mobile user so as to reduce interference to other system users.

In the satellite application of the CDMA communication techniques, the mobile unit transceiver measures the power level of a signal received via a satellite repeater. Using this power measurement, along with knowledge of the satellite transponder downlink transmit power level and the sensitivity of the mobile unit receiver, the mobile unit transceiver can estimate the path loss of the channel between the mobile unit and the satellite. The mobile unit transceiver then determines the appropriate transmitter power to be used for signal transmissions between the mobile unit and the satellite, taking into account the path loss measurement, the transmitted data rate and the satellite receiver sensitivity.

The signals transmitted by the mobile unit to the satellite are relayed by the satellite to a Hub control system earth station. The Hub measures the received signal power from signals transmitted by each active mobile unit transceiver. The Hub then determines the deviation in the received power level from that which is necessary to maintain the desired communications. Preferably the desired power level is a minimum power level necessary to maintain quality communications so as to result in a reduction in system interference.

The Hub then transmits a power control command signal to each mobile user so as to adjust or "fine tune" the transmit power of the mobile unit. This command signal is used by the mobile unit to change the transmit power level closer to a minimum level required to maintain the desired communications. As channel conditions change, typically due to motion of the mobile unit, both the mobile unit receiver power measurement and the power control feedback from the Hub continually readjust the transmit power level so as to maintain a proper power level. The power control feedback from the Hub is generally quite slow due to round trip delays through the satellite requiring approximately ½ of a second of propagation time.

One important difference between satellite or terrestrial base stations systems are the relative distances separating the mobile units and the satellite or cell-site. Another important different in the satellite versus the terrestrial system is the type of fading that occurs in these channels. Thus, these differences require various refinements in the approach to system power control for the terrestrial system.

In the satellite/mobile unit channel, i.e. the satellite channel, the satellite repeaters are normally located in a geosynchronous earth orbit. As such, the mobile units are all at approximately the same distance from the satellite repeaters and therefore experience nearly the same propagation loss. Furthermore, the satellite channel has a propagation loss characteristic that follows approximately the inverse square law, i.e. the propagation loss is inversely proportional to the square of the distance between the mobile unit and the satellite repeater in use. Accordingly, in the satellite channel the variation in path loss due to distance variation is typically on the order of only 1-2 dB.

In contrast to the satellite channel, the terrestrial/mobile unit channel, i.e. the terrestrial channel, the distance between the mobile units and the cell sites can vary considerably. For example, one mobile unit may be located at a distance of five miles from the cell site while another mobile unit may be located only a few feet away. The variation in distance may exceed a factor of one hundred to one. The terrestrial channel experiences a propagation loss characteristic as did the satellite channel. However, in the terrestrial channel the propagation loss characteristic corresponds to an inverse fourth-power law, i.e. the path loss is proportional to the inverse of the path distance raised to the fourth power. Accordingly, path loss variations may be encountered which are on the order of over 80 dB in a cell having a radius of five miles.

The satellite channel typically experiences fading that is characterized as Rician. Accordingly the received signal consists of a direct component summed with a multiply reflected component having Rayleigh fading statistics. The power ratio between the direct and reflected component is typically on the order of 6-10 dB, depending upon the characteristics of the mobile unit antenna and the environment about the mobile unit.

Contrasting the satellite channel with the terrestrial channel, the terrestrial channel experiences signal fading that typically consists of the Rayleigh faded component without a direct component. Thus, the terrestrial channel presents a more severe fading environment

than the satellite channel where Rician fading is the dominant fading characteristic.

The Rayleigh fading characteristics in the terrestrial channel signal is caused by the signal being reflected from many different features of the physical environment. As a result, a signal arrives almost simultaneously at a mobile unit receiver from many directions with different transmission delays. At the UHF frequency bands usually employed for mobile radio communications, including those of cellular mobile telephone systems, significant phase differences in signals traveling on different paths may occur. The possibility for destructive summation of the signals may result, with on occasion deep fades occurring.

Terrestrial channel fading is a very strong function of the physical position of the mobile unit. A small change in position of the mobile unit changes the physical delays of all the signal propagation paths, which further results in a different phase for each path. Thus, the motion of the mobile unit through the environment can result in a quite rapid fading process. For example, in the 850 MHz cellular radio frequency band this fading can typically be as fast as one fade per second per mile per hour of vehicle speed. Fading on this order can be extremely disruptive to signals in the terrestrial channel resulting in poor communication quality. However, additional transmitter power can be used to overcome the problem of fading.

The terrestrial cellular mobile telephone system typically requires a full-duplex channel to be provided in order to allow both directions of the telephone conversation to be simultaneously active such as provided by the conventional wired telephone system. This full-duplex radio channel is normally provided by using one frequency band for the outbound link, i.e. transmissions from the cell-site transmitter to the mobile unit receivers. A different frequency band is utilized for the inbound link, i.e. transmissions from the mobile unit transmitters to the cell-site receivers. According, this frequency band separation allows a mobile unit transmitter and receiver to be active simultaneously without feedback or interference from the transmitter into the receiver.

The use of different frequency bands has significant implications in the power control of the cell-site and mobile unit transmitters. Use of different frequency bands causes the multipath fading to be independent processes for the inbound and outbound channels. A mobile unit cannot simply measure the outbound channel path loss and assume that the same path loss is present on the inbound channel.

It is therefore, an object of the present invention to provide a novel and improved method and apparatus for controlling in the terrestrial channel transmitter power so as to overcome deleterious fading without causing unnecessary system interference which can adversely affect overall system capacity.

SUMMARY OF THE INVENTION

In a terrestrial CDMA cellular mobile telephone system, it is desirable that the transmitter power of the mobile units be controlled so as to produce at the cell site receiver a nominal received signal power from each and every mobile unit transmitter operating within the cell. Should all of the mobile unit transmitters within an area of coverage of the cell-site have transmitter power controlled accordingly the total signal power received at the cell-site would be equal to the nominal receiver power of the mobile unit transmitted signal multiplied by the number of mobile units transmitting within the cell. To this is added the noise power received at the cell-site from mobile units in adjacent cells.

The CDMA receivers of the cell-site respectively operate by converting a wideband CDMA signal from a corresponding one of the mobile unit transmitters into a narrow band digital information carrying signal. At the same time, other received CDMA signals that are not selected remain as wide band noise signals. The bit-error-rate performance of the cell-site receiver is thus determined by the ratio of the power of the desired signal to that of the undesired signals received at the cell-site, i.e., the received signal power in the desired signal transmitted by the selected mobile unit transmitter to that of the received signal power in undesired signals transmitted by the other mobile unit transmitters. The bandwidth reduction processing, a correlation process which results in what is commonly called "processing gain", increases the signal to noise interference ratio from a negative value to a positive value thus allowing operation within an acceptable bit-error-rate.

In a terrestrial CDMA cellular mobile telephone system it is extremely desirable to maximize the capacity in terms of the number of simultaneous telephone calls that may be handled in a given system bandwidth. System capacity can be maximized if the transmitter power of each mobile unit is controlled such that the transmitted signal arrives at the cell-site receiver at the minimal signal to noise interference ratio which allows acceptable data recovery. If a signal transmitted by a mobile unit arrives at the cell-site receiver at a power level that is too low, the bit-error-rate may be too high to permit high quality communications. On the other hand if the mobile unit transmitted signal is at a power level that is too high when received at the cell site receiver, communication with this particular mobile unit will be acceptable. However, this high power signal acts as interference to other mobile unit transmitted signals that are sharing the same channel, i.e. bandwidth. This interference may adversely affect communications with other mobile units unless the total number of communicating mobile units is reduced.

The path loss of signals in the UHF frequency band of the cellular mobile telephone channel can be characterized by two separate phenomena, average path loss and fading. The average path loss can be described statistically by a log-normal distribution whose mean is proportional to the inverse fourth-power of the path distance, and whose standard deviation is approximately equal to 8 dB. The second phenomena is a fading process caused by multipath propagation of the signals which is characterized by a Rayleigh distribution. The average path loss, which is a log-normal distribution, can be considered to be the same for both the inbound and outbound frequency bands, as is for the conventional cellular mobile telephone systems. However, as mentioned previously Rayleigh fading is an independent phenomena for the inbound and outbound link frequency bands. The log-normal distribution of the average path loss is a relatively slow varying function of position. In contrast, the Rayleigh distribution varies relatively fast as a function of position.

In the present invention, a CDMA approach to multiple user access in a cellular mobile telephone system is implemented. In such a system all the cell-sites in a region transmit, a "pilot" signal of the same frequency and code. The use of a pilot signal in CDMA systems is

well known. In this particular application, the pilot signal is used by the mobile units for initial synchronization of the mobile unit receiver. The pilot signal is also used as phase and frequency reference and a time reference for demodulation of the digital speech signals transmitted by the cell-site.

In the present invention, each mobile unit estimates the path loss in signals transmitted from the cell-site to the mobile unit. In order to make this signal path loss estimate, the power level of the cell-site transmitted signals, as received at the mobile unit, are measured. The mobile unit thus measures the pilot signal power as received from the cell-site to which the mobile unit is communicating. The mobile unit also measures the power level sum of all cell-site transmitted signals as received at the mobile unit. The power level sum measurement as described in further detail later herein, is necessary to handle cases in which the mobile unit might temporarily obtain a better path to a more distant cell-site than to a normally preferred closest cell-site.

The outbound link path loss estimate is filtered using a non-linear filter. The purpose of the non-linearity in the estimation process is to permit a rapid response to a sudden improvement in the channel while only allowing a much slower response to a sudden degradation in the channel. The mobile unit in response to a sudden improvement in the channel thus suddenly reduces mobile unit transmitter transmit power.

Should the channel for one mobile unit suddenly improve, then the signal as received at the cell-site from this mobile unit will suddenly increase in power. This sudden increase in power causes additional interference to all signals sharing the same wide band channel. A rapid response to the sudden improvement will thus reduce system interference.

A typical example of a sudden improvement in the channel occurs when a mobile unit is moving through an area that is shadowed by a large building or other obstruction and then drives out of the shadow. The channel improvement, as a result of the vehicle movement, can take place on the order of a few tens of milliseconds. As the mobile unit drives out of the shadow, the outbound link signal as received by the mobile unit will suddenly increase in strength.

The outbound link path loss estimate at the mobile unit is used by the mobile unit to adjust the mobile unit transmitter power. Thus, the stronger the received signal, the lower the mobile unit transmitter power will be. Reception of a strong signal from the cell-site indicates that the mobile unit is either close to the cell-site or else an unusually good path to the cell-site exists. Reception of a strong signal means that a relatively smaller mobile unit transmitter power level is required in order to produce a nominal received power at the cell-site in transmissions by the mobile unit.

In the case where there is a temporary but yet sudden degradation in the channel it is desirable that a much slower increase in mobile unit transmitter power be permitted. This slow increase in mobile unit transmitter power is desired so as to prohibit an unnecessarily rapid increase in mobile unit transmit power which increases the interference to all other mobile units. Thus a temporary degradation in one mobile unit channel will be tolerated in order to prevent a degradation of all mobile unit channels.

In the case of a sudden degradation in the channel, the non-linear filter prevents the mobile transmitter power from being increased at a high rate in response to the sudden decrease in signal power in signals received at the mobile unit. The rate of increase of the mobile unit transmitter transmit power must generally be limited to the rate of a closed loop power adjustment command transmitted from the cell-site, as described below, can reduce the mobile unit transmitter transmit power. Using the cell-site generated power adjustment commands, the mobile unit transmitter power will be prevented from being increased to a level significantly higher than the level required for communications, particularly when a sudden channel degradation occurs in only the outbound link path and not in the inbound link path.

It should be noted that it is undesirable to simply use a slow response on the mobile unit transmitter power control in an attempt to separate the fast Rayleigh fading from the slow fading due to distance and terrain. A slow response in the mobile unit transmitter power control is undesirable because the possibility of sudden improvements and fades that affect the inbound and outbound channels equally. If the response to a sudden improvement were to be slowed down by a filter, then there would be frequent occasions when the mobile unit transmitter power would be quite excessive and cause interference to all other mobile users. Thus the present invention uses a two time constant, non-linear approach in estimating the path loss.

In addition to measuring the received signal strength in the mobile unit, it is also desirable for the processor in the mobile unit to know the cell-site transmitter power and antenna gain (EIRP), the cell-site G/T (receive antenna gain G divided by receiver noise level T), the mobile unit antenna gain, and the number of calls active at this cell-site. This information allows the mobile unit processor to properly compute the reference power level for the local power setting function. This computation is done by calculating the cell-site to mobile link power budget, solving for the path loss. This path loss estimate is then used in the mobile cell-site link budget equation, solving for the mobile unit transmit power required to produce a desired signal level. This capability allows the system to have cell-sites with differing EIRP levels to correspond to the size of the cells. For example, a small radius cell need not transmit with as high a power level as a large radius cell. However, when the mobile unit is a certain distance from a low power cell, it would receive a weaker signal than from a high power cell. The mobile unit would respond with a higher transmit power than would be necessary for the short range. Hence, the desirability of having each cell-site transmit information as to its characteristics for power control.

The cell-site transmits information such as cell-site EIRP, G/T and number of active calls on a cell-site setup channel. The mobile unit receives this information when first obtaining system synchronization and continues to monitor this channel when idle for pages for calls originated within the public telephone switching network intended for the mobile unit. The mobile unit antenna gain is stored in a memory in the mobile unit at the time the mobile unit is installed in the vehicle.

As mentioned previously, mobile unit transmitter power is also controlled by a signal from the cell-site. Each cell-site receiver measures the strength of the signal, as received at the cell-site, from each mobile unit to which the cell-site is in communication with. The measured signal strength is compared to a desired signal strength level for that particular mobile unit. A power

adjustment command is generated and sent to the mobile unit in the outbound link data, or voice channel, addressed to that mobile unit. In response to the cell-site power adjustment command, the mobile unit increases or decreases the mobile unit transmitter power by a predetermined amount, nominally 1 dB.

The power adjustment command is transmitted by the cell-site transmitter at a relatively high rate, typically on the order of about one command every millisecond. The rate of transmission of the power adjustment command must be high enough to permit Rayleigh fading on the inbound link path to be tracked. It is further desirable for the outbound link path Rayleigh fading impressed on the inbound link path signal to be tracked. One command per millisecond is adequate to track the fading processes for vehicle speeds in the range of 25-50 miles per hour for 850 MHz band mobile communications. It is important that the latency in determining the power adjustment command and the transmission thereof be minimized so that channel conditions will not change significantly before the mobile unit receives and responds to the signal.

To account for the independence of the two Rayleigh fading paths, the mobile unit transmitter power is also controlled by the power adjustment command from the cell-site. Each cell-site receiver measures the received signal strength from each mobile unit. The measured signal strength is compared to the desired signal strength for that mobile unit and a power adjustment command is generated. The power adjustment command is sent to the mobile unit in the outbound data or voice channel addressed to that mobile unit. This power adjustment command is combined with the mobile unit one way estimate to obtain the final value of the mobile unit transmitter power.

The power adjustment command signal is transmitted, in an exemplary embodiment, by overwriting one or more user data bits every millisecond. The modulation system employed in CDMA systems is capable of providing error detection and correction coding for user data bits. The overwrite by the power adjustment command is treated as a channel bit error or erasure and corrected by the error correction as decoded in the mobile unit receiver. Error correction coding on the power adjustment command bits in many cases may not be desirable because of the resulting increased latency in reception and response to the power command. It is also envisioned that time division multiplexing for transmission of the power adjustment command bits may be used without overwriting user data channel symbols.

The cell-site controller or processor can be used to determine the desired signal strength, as received at the cell-site, for signals transmitted by each mobile unit. The desired signal strength level values are provided to each of the cell-site receivers. The desired signal strength value is used for comparing with a measured signal strength value for generating the power adjustment command.

A system controller is utilized to command each cell-site processor as to the value of desired signal strength to use. The nominal power level can be adjusted up or down to accommodate variations in the average conditions of the cell. For example, a cell-site positioned in an unusually noisy location or geographic region might be allowed to use a higher than normal inbound power level. However, such a higher power level for in-cell operation will result in higher levels of interference to immediate neighbors of this cell. This interference can be compensated for by allowing the neighbor cells a small increase in inbound power in neighboring cells. Such an increase in inbound power in neighboring cells would be smaller than that of the increase given to the mobile users communicating in the high noise environment cell. It is further understood that the cell-site processor may monitor the average bit-error-rate. This data may be used by the system controller to command the cell-site processor to set an appropriate inbound link power level to assure acceptable quality communications.

It is also desirable to provide a means for controlling the relative power used in each data signal transmitted by the cell-site in response to control information transmitted by each mobile unit. The primary reason for providing such control is to accommodate the fact that in certain locations, the outbound channel link from the cell-site to the mobile unit may be unusually disadvantaged. Unless the power being transmitted to this mobile is increased, the quality may become unacceptable. An example of such a location is a point where the path loss to one or two neighboring cells is nearly the same as the path loss to the cell-site communicating with the mobile unit. In such a location, the total interference would be increased by three times over the interference seen by the mobile unit at a point relatively close to its cell-site. In addition, the interference coming from these neighboring cell-sites will not fade in unison with the desired signal as would be the case for interference coming from the desired cell-site. This situation may required 3-4 dB additional signal power to achieve adequate performance.

In another situation, the mobile unit may be located where several strong multi-path signals arrive, resulting in larger than normal interference. In , such a situation, increasing the power of the desired signal relative to the interference may allow acceptable performance. At other times, the mobile unit may be located where the signal-to-interference ratio is unusually good. In such a case, the cell-site could transmit the desired signal using a lower than normal transmitter power, reducing interference to other signals being transmitted by the system.

To achieve the above objectives, the preferred embodiment includes a signal-to-interference measurement capability within the mobile unit receiver. This measurement is performed by comparing the power of the desired signal to the total interference and noise power. If the measured ratio is less than a predetermined value the mobile transmits a request to the cell-site for additional power in cell-site transmissions. If the ratio exceeds the predetermined value, the mobile unit transmits a request for a reduction in power.

The cell-site receives the power adjustment requests from each mobile and responds by adjusting the power allocated to the corresponding cell-site transmitted signal by a predetermined amount. The adjustment would usually be small, on the order of 0.5 dB, or 12%. The rate of power may be somewhat slower than that used for the inbound link from the mobile unit to cell-site, perhaps once per vocoder frame, or nominally once per 15 milliseconds. The dynamic range of the adjustment would also be limited to 4 dB less than nominal to about 6 dB greater than nominal.

The cell-site must also consider the power demands being made on it by all the mobiles in deciding whether to comply with the requests of any particular mobile. For example, if the cell-site is loaded to capacity, requests for additional power might be granted but only

by 6% or less instead of the normal 12%. In this regime, a request for a reduction in power would still be granted at the normal 12% change.

BRIEF DESCRIPTION OF THE DRAWINGS

The features and advantages of the present invention will become more apparent from the detailed description set forth below when taken in conjunction with the drawings in which like reference characters correspond throughout and wherein:

FIG. 1 is a schematic overview of an exemplary mobile cellular telephone system;

FIGS. 2A-2D illustrate, in a series of graphs, mobile unit received signal strength and transmit power as a function of distance;

FIG. 3 is a block diagram of a cell-site with particular reference to the power control features of the present invention;

FIG. 4 is a block diagram of the mobile unit with particular reference to the power control features of the present invention;

FIG. 5 is a block diagram illustrating in further detail the power control features of the mobile unit of FIG. 4; and

FIG. 6 is a block diagram illustrating in further detail the power control features of the cell-site of FIG. 3.

DETAILED DESCRIPTION OF THE PREFERRED EMBODIMENTS

An exemplary terrestrial cellular mobile telephone system in which the present invention is embodied is illustrated in FIG. 1. The system illustrated in FIG. 1 utilizes CDMA modulation techniques in communications between the system mobile user, and the cell-sites. Cellular systems in large cities may have hundreds of cell-site stations serving hundreds of thousands of mobile telephones. The use of CDMA techniques readily facilitates increases in user capacity in systems of this size as compared to conventional FM modulation cellular systems.

In FIG. 1, system controller and switch 10, typically includes appropriate interface and processing hardware for providing system control information to the cell-sites. Controller 10 controls the routing of telephone calls from the public switched telephone network (PSTN) to the appropriate cell-site for transmission to the appropriate mobile unit. Controller 10 also controls the routing of calls from the mobile units via at least one cell-site to the PSTN. Controller 10 may direct calls between mobile users via the appropriate cell-site stations since such mobile units do not typically communicate directly with one another.

Controller 10 may be coupled to the cell-sites by various means such as dedicated telephone lines, optical fiber links or by radio frequency communications. In FIG. 1, two exemplary cell-sites, 12 and 14, along with two exemplary mobile units 16 and 18 which include cellular telephones are illustrated. Arrows 20*a*-20*b* and 22*a*-22*b* respectively define the possible communication links between cell-site 12 and mobile units 16 and 18. Similarly, arrows 24*a*-24*b* and arrows 26*a*-26*b* respectively define the possible communication links between cell-site 14 and mobile units 18 and 16. Cell-sites 12 and 14 normally transmit using equal power.

Mobile unit 16 measures the total received power in signals transmitted by cell-sites 12 and 14 upon path 20*a* and 26*a*. Similarly, mobile unit 18 measures the total received power in signals as transmitted by cell-sites 12 and 14 upon paths 22*a* and 24*a*. In each of mobile units 16 and 18, signals power is measured in the receiver where the signals wide band signals. Accordingly, this power measurement is made prior to correlation of the received signals with a pseudonoise (PN) spectrum spreading signal.

When mobile unit 16 is closer to cell-site 12, the received signal power will be dominated by the signals traveling path 20*a*. When mobile unit 16 is nearer to cell-site 14, the received power will be dominated by the signals traveling on path 26*a*. Similarly, when mobile unit 18 is closer to cell-site 14, the received power will be dominated by the signals on path 24*a*. When mobile unit 18 is closer to cell-site 12, the received power will be dominated by the signals traveling on path 22*a*.

Each of mobile units 16 and 18 uses the resultant measurement, together with knowledge of the cell-site transmitter power and the mobile unit antenna gain to estimate the path loss to the closest cell-site. The estimated path loss, together with knowledge of the mobile antenna gain and the cell-site G/T is used to determine the nominal transmitter power required to obtain the desired carrier-to-noise ratio in the cell-site receiver. The knowledge by the mobile units of the cell-site parameters may be either fixed in memory or transmitted in cell-site information broadcast signals, setup channel, to indicate other than nominal conditions for a particular cell-site.

As a result of the determination of the mobile unit nominal transmit power, in the absence of Rayleigh fading and assuming perfect measurements, the mobile unit transmitted signals will arrive at the nearest cell-site precisely at the desired carrier-to-noise ratio. Thus the desired performance will be obtained with the minimum amount of mobile unit transmitter power. The minimization of the mobile unit transmitted power is important in a CDMA system because each mobile unit causes interference to every other mobile unit in the system. In minimizing the mobile unit transmitter power, system interference will be held to a minimum, thus allowing additional mobile users to share the frequency band. Accordingly, system capacity and spectral efficiency is maximized.

FIG. 2A illustrates the effect of both Rayleigh fading as a function of distance on the strength of the cell-site transmitted signal as received at a mobile unit. The average path loss, indicated by curve 30, is determined primarily by the fourth-power of the distance between the cell-site and the mobile unit, and by the shape of the terrain between them. As distance increases between the mobile unit and the cell-site, signal power decreases as received at the mobile unit for a constant power transmitted cell-site signal. The average path loss is the same for both directions of the link, and typically exhibits a log-normal distribution about the average path loss.

In addition to the slowly varying log-normal average path loss, the rapid fading up and down around the average path loss is caused by the existence of multiple path signal propagation. The signals arrive from these multiple paths in random phase and amplitude, resulting in the characteristic Rayleigh fading. Curve 32 as illustrated in FIG. 2A represents the variation in signal path loss as a result of Rayleigh fading. The Rayleigh fading is typically independent for the two directions of the cell-site/mobile unit communication link, i.e. outbound and inbound channels. For example, when the outbound

channel is fading, the inbound channel is not necessarily fading at the same time.

FIG. 2B illustrates the mobile unit transmitter power adjusted to correspond to the link path signal strength of FIG. 2A. In FIG. 2B, curve 34 represents the desired average transmit power corresponding to the average path loss of curve 30 of FIG. 2A, similarly, curve 36 corresponds to the mobile unit transmitter power corresponding to the Rayleigh fading as represented by curve 32 of FIG. 2A. As the Rayleigh faded signal, curve 32 of FIG. 2A, decreases in signal strength, rapid increases in transmitter power result. These rapid upward excursions of transmitter power can result in deleterious effects in overall system performance. Therefore, the present invention envisions the use of a non-linear filter to control rapid upward excursions, or increases, in transmitter power. Furthermore, the present invention also utilizes closed loop power adjustment feedback from the cell-site to adjust mobile unit transmitter power.

FIG. 2C illustrates the mobile unit transmitter power corresponding to FIG. 2A without taking into consideration the cell-site closed loop power adjustment feedback. In FIG. 2C the desired average transmit power, as represented by curve 34', corresponds to the mobile unit received signal strength of curve 30 of FIG. 2A. Curve 38 illustrates the transmitter power utilizing the non-linear filter in power control of the present invention. The rapid upward excursions in transmitter power, as indicated by the dashed lines of FIG. 2C and correspond to the upward excursions in curve 36 of FIG. 2B, are significantly reduced. In curve 38, the upward excursions are significantly reduced by setting the rate of increase in transmit power to a fixed value. The resulting variation in transmitter power relative to the desired transmit power is both limited in dynamic range and in rate of change. This limitation allows the closed loop power adjustment feedback process to be easier to implement and to be more effective at a much lower control data rate. Transmit power, as indicated by curve 38, is permitted to decrease at a much greater rate than an increase.

As distance increases from the points marked D_1-D_2 transmitter power decreases rather quickly corresponding to a sudden improvement in the channel. Between the distance points marked D_2-D_3 the channel degrades with a corresponding increase in transmitter power. The change in degradation is not so significant such that the non-linear filter maximum rate limits the rate of increase in transmitter power.

As distance increases as from the distance points marked D_3-D_4, the channel degrades much more rapidly than the non-linear filter will permit an increase in transmitter power. During this period, transmitter power increases at the maximum rate permitted by the non-linear filter. During the distance change indicated by marks D_4-D_5, the channel begins improving. However, as the quality of the channel improves the transmitter power continues to increase at the maximum rate until transmitter power is sufficient to meet the desired level such as at mark D_5.

It is desirable to eliminate the upward excursions in transmitter power which may cause unnecessary system interference. Should a better path to another cell-site occur, which would result in unnecessary interference in the system, quality communications in the system may be maintained by limiting the rate of increase in transmitter power.

FIG. 2D is a graph illustrating the cell-site received signal power strength with respect to transmissions of the mobile unit as it travels from the cell-site. Curve 40 indicates the desired overage received signal power at the cell-site for a signal transmitted from a mobile unit. It is desirable that the average received signal power be at a constant level, yet a minimum necessary to assure a quality communication link with the mobile unit corrections are made at the mobile unit to correct for Rayleigh fading in the cell-site transmitted signal.

The mobile unit transmitted signal experiences Rayleigh fading before arriving at the cell-site receiver. The signal received at the cell-site is therefore a signal of constant average received power level but still with the Rayleigh fading of the inbound channel impressed thereupon. Curve 42 represents the Rayleigh fading that occurs on the inbound signal.

Additionally, there is the possibility that the mobile unit may come to rest at a place where the outbound link is not faded but yet the inbound link is severely faded. Such a condition would disrupt communications unless an additional mechanism is employed to compensate for the inbound channel Rayleigh fading. Such a mechanism is the closed loop power adjustment command process employed at the cell-site for adjusting the mobile unit transmitter power. Such a power adjustment compensates for the Rayleigh fading on the inbound channel. In FIG. 2D, curve 44 illustrates the mobile unit transmitted signal power as received at the cell-site when compensating for average path loss and Rayleigh fading on both the inbound and outbound channels. As can be seen in FIG. 2D curve 44 follows close to curve 40 except for instances of severe fading where the fading process is minimized by the closed loop control.

In FIG. 3 antenna 52 is provided for receiving multiple mobile unit transmitted signals which are then provided to analog receiver 54 for amplification, frequency downconversion and IF processing of the received RF signal. The analog signals output from receiver 54 are provided to a plurality of receiver modules for, extraction of user directed information signals, generation of power adjustment commands, and modulation of user input information signals for transmission. One such module used in communications with a particular mobile unit, such as mobile unit N, is module 50. Thus the output of receiver 54 is provided to a plurality of these modules including module 50.

Module 50 comprises digital data receiver 56, user digital baseband circuit 58, received power measurement circuitry 60 and transmit modulator 62. Digital data receiver 56 receives the wideband spread spectrum signals for correlating and despreading the mobile unit N transmitted signal to a narrow band signal for transfer to an intended recipient communicating with mobile unit N. Digital data receiver 56 provides the narrow band digital signals to user digital baseband circuitry 58. Digital data receiver 56 also provides the narrow band signal to received power measurement circuitry 60 measures the power level in the received signal from mobile unit N. Received power measurement circuitry 60 in response to the measured level of power generates a power adjustment command which is input to transmit modulator 62 for transmission to mobile unit N. As previously discussed, the data bits in the power adjustment command are used by mobile unit N in adjusting mobile unit transmitter power.

Case 3:05-cv-01392-B-BLM Document 1 Filed 07/11/05 Page 39 of 177

When the received power measurement is greater than the preset level provided by a cell-site processor (not shown), an appropriate power adjustment command is generated. Should the received power measurement be less than the preset level, the power adjustment command data bits are generated and indicate that an increase in mobile unit transmitter power is necessary. Similarly, if the received measurement is greater than the preset level, the power adjustment command is generated such that the mobile unit transmitter power is reduced. The power adjustment command is utilized to maintain a nominal received power level at the cell-site.

The signal output from digital data receiver 56 is provided to user digital baseband circuitry 58 where it is interfaced for coupling to the intended recipient via the system controller and switch. Similarly, baseband circuitry 58 receives user information signals intended for mobile unit N and provides them to transmit modulator 62.

Transmit modulator 62 spread spectrum modulates the user addressable information signals for transmission to mobile unit N. Transmit modulator 62 also receives the power adjustment command data bits from received power measurement circuitry 60. The power adjustment command data bits are also spread spectrum modulated for transmission to mobile unit N. Transmit modulator 62 provides the spread spectrum modulated signal to summer 64 where it is combined with spread spectrum signals from other module transmit modulators also located at the cell-site.

The combined spread spectrum signals are input to summer 66 where they are combined with a pilot signal provided by pilot signal generator 68. These combined signals are then provided to circuitry (not shown) for frequency upconversion from the IF frequency band to the RF frequency band and amplified. The RF signals are then provided to antenna 52 for transmission. Although not illustrated transmit power control circuitry may be disposed between summer 66 and antenna 52. This circuitry, under control of the cell-site processor, is responsive to power adjustment command signals transmitted by the mobile unit, demodulated at the cell-site receiver and provided to the cell-site control processor for coupling to the circuitry.

In FIG. 4, the mobile unit, such as mobile unit N, includes an antenna 70 for collecting cell site transmitted signals and radiating mobile unit generated CDMA signals. Mobile unit N receives the pilot signal, setup channel signals and the mobile unit N addressed signals using antenna 70, analog receiver 72 and digital data receiver 74. Receiver 72 amplifies and frequency downconverts the received RF CDMA signals to IF, and filters the IF signals. The IF signals are output to digital data receiver 74 for digital processing. Receiver 72 also includes circuitry for performing an analog measurement of the combined power of the received signals. This power measurement is used to generate a feedback signal that is provided to transmit power control circuitry 76 for controlling transmit power.

Digital data receiver 74 is used for despreading and correlating the received signals addressed to mobile unit N. Receiver 74 also separates the digital data from the power adjustment command generated by the cell site. The power adjustment command data bits are sent to control processor 78. Processor 78 generates a transmit power control command that is provided to transmit power control circuitry 80. Processor 78 also provides a level set command to transmit power control circuitry 76. Further details on the interaction of receiver 72, transmit power control 76 and 80, and processor are described in further detail with reference to FIG. 5.

Receiver 74 also provides data such as digitized encoded speech to user digital baseband circuitry 82 for decoding and interface with the user. Baseband circuitry 82 includes interface hardware for coupling receiver 74 and transmit modulator 82 to the user handset (not shown).

Data to be transmitted is provided through baseband circuitry 82 where it is encoded and provided to transmit modulator 84. The data is spread spectrum modulated by transmit modulator 84 according to an assigned spreading code. The spread spectrum signals are output from transmit modulator 84 to transmit power control circuitry 80. The signal power is adjusted in accordance with the transmit power control command provided by control processor 78. This power adjusted signal is provided from transmit power control circuitry 80 to transmit power control circuitry 76 where the signal is adjusted in accordance with the analog measurement control signal. Although illustrated as two separate units for controlling the transmit power, the power level could be adjusted by a single variable gain amplifier with two input control signals combined before being applied to the variable gain amplifier. However in the illustrated exemplary embodiment the two control functions are shown as separate elements.

In the operation of the power control circuitry illustrated in FIG. 4, receiver 72 measures the combined power level of all signals received from all cell-sites. These power level measurement results are used in controlling the power level as set by transmit power control circuitry 76. Transmit power control circuitry 76 includes circuitry in which the rate of increase transmitter power is limited by a non-linear filter as previously discussed. The rate of increase is set to be no faster than the rate at which transmit power control circuitry 80 can turn the power down in response to a series of downward commands from the cell-site and processed by receiver 74 and processor 78.

FIG. 5 illustrates in further detail the power control aspect of mobile unit N discussed with reference to FIG. 4. In FIG. 5, received RF signals from the antenna are provided to frequency downconverter 90 where the received RF signals are converted to an IF frequency. The IF frequency signals are coupled to bandpass filter 92 where out of band frequency components are removed from the signals.

The filtered signals are output from filter 92 to variable gain IF amplifier 94 where the signals are amplified. The amplified signals are output from amplifier 94 to an analog to digital (A/D) converter (not shown) for digital signal processing operations on the signals. The output of amplifier 94 is also coupled to automatic gain control (AGC) detector circuit 96.

AGC detector circuit 96 generates a gain control signal which is coupled to a gain control input of amplifier 94. This gain control signal is used to control the gain of the amplifier 94 so as to maintain a constant average power level as output from amplifier 94 to the A/D converter.

AGC detector circuit 96 also provides an output to one input of comparator 98. The other input of comparator 98 is provided with a level set signal from the mobile unit processor (not shown). This level set signal is indicative of a desired transmitter reference power level. These input signals are compared by comparator

98 with the comparison signal provided to a non-linear filter circuit 100. This comparison signal corresponds to a deviation in the received power measurement from a desired mobile unit transmitter power level.

Filter 100 may be configured as a simple resistor-diode-capacitor circuit. For example, the input to the circuit is a common node shared two resistors. The other end of each resistor is coupled to a respective diode. The diodes are reversed in their connection to the resistors, and the other end of each diode coupled together as a common node as an output of the filter. A capacitor is coupled between the diode common node and ground. The filter circuit is designed to limit the rate of power increase to less than 1 dB per millisecond. The rate of power decrease is typically set to be about ten times faster than the rate of power increase, i.e. 10 dB per millisecond. The output of filter 100 is provided as a power level control signal input to the gain control input of variable gain IF amplifier 102.

AGC detector circuit 96, comparator 98 and filter 100 estimate received mobile unit signal power and the power correction necessary for the mobile unit transmitter. This correction is used to maintain a desired transmitter power level in conditions of fading on the outbound channel that are common to the inbound channel.

Transmit modulator circuit 84 of FIG. 4, provides a low power, IF frequency spread spectrum signal to an input of variable gain IF amplifier 104. Amplifier 104 is gain controlled by a power level control signal from processor 78 (FIG. 4). This power level control signal is derived from the closed loop power adjustment command signal transmitted by the cell-site and processed by the mobile unit as discussed with reference to FIG. 4.

The power adjustment command signal consists of a sequence of power-up and power-down commands that are accumulated in the mobile unit processor. The mobile unit control processor starts with the gain control level set to a nominal value. Each power-up command increases the value of a gain control command corresponding to a resultant approximate 1 dB increase in amplifier gain. Each power-down command decreases the value of the gain control command, corresponding to a resultant approximate 1 dB decrease in amplifier gain. The gain control command is converted to analog form by a digital to analog (D/A) converter (not shown) before applied to amplifier 104 as the power level control signal.

The mobile unit reference power level may be stored in the memory of the control processor. In the alternative the mobile unit reference power level may be contained within a signal sent to the mobile unit. This signal command data is separated by the digital data receiver and interpreted by the control processor in setting the level. This signal as provided from the control processor is converted by a digital to analog (D/A) converter (not shown) before input to comparator 98.

The output of amplifier 104 is provided as an input to amplifier 102. Amplifier 102 as previously mentioned is also a variable gain IF amplifier with the gain determined according to the power level control signal output from filter 100. The signal for transmission is amplified in accordance with the gain set by the power level control signal from filter 100. The amplified output signal from amplifier 102 and is further amplified and frequency translated to the RF frequency for transmission. The RF signal is then fed to the antenna for transmission.

FIG. 6 illustrates in further detail the power control scheme of the cell-site as illustrated in FIG. 3. In FIG. 6 a mobile unit transmitted signal is received at the cell-site. The received signal is processed by the cell-site analog receiver and cell-site digital data receiver corresponding to mobile unit N.

In the digital data receiver, receiver 56 of FIG. 3, the received analog signal is converted from analog to digital form by A/D converter 110. The digital signal output from A/D converter is provided to pseudorandom noise (PN) correlator 112 where the signal undergoes a correlation process with a PN signal provided from PN generator 114. The output of PN correlator 112 is provided to a fast Hadamard transform digital filter 114 where the signal is filtered. The output of filter 114 is provided to a user data decoder circuit 116 which provides user data to the user digital baseband circuitry. Decoder 116 provides the largest transform filter symbols to power averager circuit 118. The power averager circuit 118 averages the largest transform outputs over a one millisecond interval using well known digital techniques.

A signal indicative of each average power level is output from power averager 118 to comparator 120. Comparator 120 also receives a power level set signal indicative of the desired received power level. This desired received power level is set by the control processor for the cell-site. Comparator 120 compares the two input signals and provides an output signal indicative of the deviation of the average power level from the desired power level. This signal is provided output to power up/down command generator 122. Generator 122 in response to the comparison generates either a power-up or a power-down command. Power command generator 122 provides the power control commands to the cell-site transmit modulator for transmission and control of the transmitter power of mobile unit N.

If the received power at the cell-site is higher than that desired of mobile unit N, then a power-down command is generated and transmitted to mobile unit N. However, if the received power level at the cell-site is too low, then a power-up command is generated and transmitted. The up/down commands are transmitted at a high rate, nominally 1,000 commands per second in the exemplary embodiment. At one bit per command, the overhead of the power command is insignificant compared to the bit rate of a high quality digital voice signal.

The power adjustment command feedback compensates for changes in the inbound channel receiver that are independent of the outbound channel. These independent inbound channel changes are not measured in the outbound channel signal upon the outbound channel. Therefore the path loss estimate based and the transmitter corresponding power adjustment do not reflect the changes in the inbound channel. Thus, the power adjustment command feedback is used to compensate for adjustments mobile unit transmitter power based on the inbound channel path losses that do not exist in the inbound channel.

In using a closed loop control process it is highly desirable for the command to arrive at the mobile unit before conditions change significantly. The present invention provides a novel and unique power control circuitry at the cell-site for minimizing delay and la-

of measurement and transmission. The power control circuitry at the mobile unit, analog control and digital command response, provides a vastly improved power control process in the cellular mobile telephone system.

The previous description of the preferred embodiments are provided to enable any person skilled in the art to make or use the present invention. Various modifications to these embodiments will be readily apparent to those skilled in the art, and the generic principals defined herein may be applied to other embodiments without the use of the inventive faculty. Thus, the present invention is not intended to be limited to the embodiments shown herein, but is to be accorded the widest scope consistent with the principals and novel features disclosed herein.

We claim:

1. A method for controlling transmission power of a first transceiver in communicating information signals of a first user using spread spectrum communication signals within a first frequency band to a second transceiver, and said first transceiver is further for extracting information signals of a second user communicated to said first transceiver by said second transceiver also using spread spectrum communication signals in a second frequency band, said method comprising the steps of:

determining combined signal power of all signals received by said first transceiver within said second frequency band;

controlling signal power of said first transceiver transmitted spread spectrum communication signals in inverse proportion to variations in said determined combined signal power; and

controlling signal power of said first transceiver transmitted spread spectrum communication signals in inverse proportion to variations in signal power of first transceiver transmitted spread spectrum communication signals as received by said second transceiver.

2. The method of claim 1 wherein said step of determining combined signal power comprises the steps of:

measuring combined signal power of all signals received by said first transceiver within said second frequency band; and

generating a corresponding measurement indication; and wherein said step of controlling signal power of said first transceiver transmitted spread spectrum communication signals in inverse proportion to variations in said determined combined signal power comprises the steps of:

comparing said measurement indication with a predetermined power level so as to provide a corresponding comparison result; and

adjusting signal power of said first transceiver transmitted spread spectrum communication signals in response to said comparison result.

3. The method of claim 2 wherein said step of controlling signal power of said first transceiver transmitted spread spectrum communication signals in inverse proportion to variations in signal power of first transceiver transmitted spread spectrum communication signals received by said second transceiver comprises the steps of:

measuring signal power of first transceiver transmitted spread spectrum communication signals as received by said second transceiver;

generating power adjustment commands in accordance with deviations in said measured signal power with respect to a desired reception power level;

inserting said power adjustment commands in said second transceiver transmitted spread spectrum communication signals to said first transceiver; and

adjusting signal power of said first transceiver transmitted spread spectrum communication signals in accordance with said power adjustment commands as received by said first transceiver.

4. The method of claim 1 wherein said step of controlling signal power of said first transceiver transmitted spread spectrum communication signals in proportion to variations in signal power of first transceiver transmitted spread spectrum communication signals as received by said second transceiver comprises the steps of:

measuring signal power of first transceiver transmitted spread spectrum communication signals received by said second transceiver;

generating power adjustment commands in accordance with deviations in said measured signal power with respect to a desired reception power level;

inserting said power adjustment commands in said second transceiver transmitted spread spectrum communication signals to said first transceiver; and

adjusting signal power of said first transceiver transmitted spread spectrum communication signals in accordance with said power adjustment commands as received by said first transceiver.

5. The method of claim 4 further comprising the step of controlling signal power of said second transceiver transmitted spread spectrum communication signals in inverse proportion to variations of a measured ratio, of second transceiver transmitted spread spectrum communication signals as received by said first transceiver to a signal power of interfering signals, with respect to a desired ratio.

6. The method of claim 5 wherein said step of controlling signal power of said second transceiver transmitted spread spectrum communication signals comprises the steps of:

measuring signal power of all signals received by said first transceiver within said second predetermined frequency band;

measuring signal power of said second transceiver transmitted spread spectrum communication signals as received by said first transceiver;

comparing said measured signal power of said second transceiver transmitted spread spectrum communication signals received by said first transceiver so as to provide a signal-to-interference ratio value;

generating power adjustment requests in accordance with deviations in said signal-to-interference ratio value with respect to a desired signal-to-interference ratio value;

inserting said power adjustment requests in said first transceiver transmitted spread spectrum communication signals; and

adjusting signal power of said second transceiver transmitted spread spectrum communication signals in correspondence with said power adjustment requests as received by said second transceiver in

said first transceiver transmitted spread spectrum communication signals.

7. In a remote station transceiver having a receiver for receiving a base station transmitted outbound spread spectrum signals wherein one of said outbound spread spectrum signals contains first user information and for demodulating said one outbound spread spectrum signal to provide said first user information to a first user, and a transmitter for transmitting to said base station an inbound spread spectrum signal containing second user information, said transceiver having a power control system for controlling at said transceiver the transmission signal power of said inbound spread spectrum signal wherein the signal power of said inbound spread spectrum signal as received at said base station is maintained about a predetermined average signal power level, and wherein said base station measures the signal power of said inbound spread spectrum signal as received at said base station, generates power adjustment commands according to variations in said measured signal power of said inbound spread spectrum signal with respect to said predetermined average signal power level and transmits said power adjustment commands in said one outbound spread spectrum signal, said power control system comprising:

control processor means coupled to said receiver for receiving from said receiver said power adjustment commands in said one outbound spread spectrum signal, accumulating values corresponding to said power adjustment commands with respect to a predetermined first power level value, and generating a corresponding first power level control signal, said control processor means further for generating a power level set signal;

automatic gain control means coupled to said receiver for measuring signal power of all of said outbound spread spectrum signals received by said receiver, and providing a corresponding power measurement signal;

comparator means for receiving and comparing said power measurement signal and said power level set signal, and providing a corresponding second power level control signal; and

amplification means coupled to said transmitter for receiving said first and second power level control signals and amplifying said inbound spread spectrum signal at a gain level determined by said first and second power level control signals.

8. The transceiver of claim 7 wherein said power control system amplification means comprises:

first amplifier means for, receiving said first power level control signal and amplifying said inbound spread spectrum signal at a first gain determined by said first power level control signal; and

second amplifier means for receiving said second power level control signal and said first amplifier means amplified inbound spread spectrum signal, and amplifying said first amplifier means amplified inbound spread spectrum signal at a second gain determined by said second power level control signal.

9. In the transceiver of claim 8 wherein an increase in measured outbound spread spectrum signal power corresponds to an increase in said second power control level signal with said second amplifier means responsive thereto for decreasing said second gain, and a decrease in measured outbound spread spectrum signal power corresponds to a decrease in said second power control level signal with said second amplifier means responsive thereto for increasing said second gain.

10. In the transceiver of claim 9, said receiver having an analog portion and a digital receiver portion, said automatic gain control means coupled to said analog receiver portion with said signal power of said received outbound spread spectrum signals being measured as wideband signal power, and said digital receiver portion coupled to said control processor with said digital receiver portion extracting said power adjustment commands from said one outbound spread spectrum signal, wherein each power adjustment command affects a change in said first power level control signal with said first amplifier means responsive to each change in said first power level control signal so as to provide a corresponding change in said first gain.

11. In the transceiver of claim 10 wherein each change in said first gain corresponds to a predetermined dB gain change in transmission signal power of said inbound spread spectrum signal.

12. In the transceiver of claim 7 wherein in said power control system measured increases and decreases in signal power respectively correspond to decreases and increases in said gain level.

13. In the transceiver of claim 7 wherein said base station transmits said outbound spread spectrum signals in a first predetermined frequency band and said transceiver transmits inbound spread spectrum signal in a second predetermined frequency band.

14. In the transceiver of claim 7 said receiver having an analog receiver portion and a digital receiver portion, said automatic gain control means coupled to said analog receiver portion with said signal power of said received outbound spread spectrum signals being measured as wideband signal power, and said digital receiver portion coupled to said control processor with said digital receiver portion extracting said power adjustment commands from said one outbound spread spectrum signal.

15. In the transceiver of claim 7 wherein said power control system further comprises filter means for nonlinearly limiting a rate of change in said second power level control signal so as to provide a rate of change in increases of said second power level control signal that is greater than a rate of change in decreases in said second power level control signal.

16. A system for controlling transmission power of a first transceiver in transmitting spread spectrum communication signals, to a second transceiver such that said first transceiver transmitted signals are maintained at a predetermined power level as received at said second transceiver, said second transceiver also transmitting spread spectrum communication signals to said first transceiver, said system comprising:

first power control means for determining combined signal power of second transceiver transmitted spread spectrum communication signals received by said first transceiver and controlling signal power of said first transceiver transmitted spread spectrum communication signals in inverse proportion to variations in said determined combined signal power; and

second power control means for further controlling signal power of said first transceiver transmitted spread spectrum communication signals in inverse proportion to variations in signal power of first transceiver transmitted spread spectrum communication signals received by said second transceiver.

17. The system of claim 16 wherein said first power control means provides increases in signal power at a rate less than decreases in signal power.

18. The system of claim 16 wherein said first power control means provides increases in signal power at a rate less than said second power control means provides decreases in signal power.

19. The system of claim 16 wherein said open loop power control means compensates for variations in channel conditions affecting signal power in a second transceiver to first transceiver communication channel.

20. The system of claim 16 wherein said second power control means compensates for variations in channel conditions affecting signal power in a first transceiver to second transceiver communication channel.

21. The system of claim 16 wherein said first power control means comprises:

means for measuring combined signal power of all second transceiver transmitted spread spectrum communication signals received by said first transceiver; and

means for adjusting signal power, of said first transceiver transmitted spread spectrum communication signals, in inverse proportion to deviations in said first transceiver measured signal power with respect to a predetermined reference power level.

22. The system of claim 21 wherein said second power control means comprises:

means for measuring signal power of first transceiver transmitted spread spectrum communication signals received by said second transceiver;

means for generating power adjustment commands in accordance with deviations in said second transceiver measured signal power with respect to a desired reception power level;

means for inserting said power adjustment commands in said second transceiver transmitted spread spectrum communication signals; and

means for further adjusting signal power of said first transceiver transmitted spread spectrum communication signals in accordance with said power adjustment commands as received by said first transceiver.

23. The system of claim 22 wherein said means for measuring combined signal power of all second transceiver transmitted spread spectrum communication signals received by said first transceiver measures wideband signal power, and said means for measuring signal power of first transceiver transmitted spread spectrum communication signals received by said second transceiver digitally measures narrowband signal power.

24. The system of claim 16 wherein said second power control means comprises:

means for measuring signal power of first transceiver transmitted spread spectrum communication signals received by said second transceiver;

means for generating power adjustment commands in accordance with deviations in said second transceiver measured signal power with respect to a desired reception power level;

means for inserting said power adjustment commands in said second transceiver transmitted spread spectrum communication signals; and

means for adjusting signal power of said first transceiver transmitted spread spectrum communication signals in accordance with said power adjustment commands as received by said first transceiver.

25. The system of claim 16 further comprising third power control means for controlling signal power of said second transceiver transmitted spread spectrum communication signals in inverse proportion to variations of a measured ratio, of signal power of second transceiver transmitted spread spectrum communication signals received by said first transceiver to a signal power of interfering signals, with respect to a desired ratio.

26. The system of claim 25 wherein said third power control means comprises:

means for, measuring signal power of all signals received by said first transceiver, measuring signal power of said second transceiver transmitted spread spectrum communication signals as received by said first transceiver, comparing said measured signal power of said second transceiver transmitted spread spectrum communication signals received by said first transceiver with said measured signal power of said all signals received by said first transceiver so as to provide a signal-to-interference ratio value, generating power adjustment requests in accordance with to deviations in said signal-to-interference ratio value with respect to a desired predetermined signal-to-interference ratio value, and inserting said power adjustment requests in said first transceiver transmitted spread spectrum communication signals; and

means for adjusting signal power of said second transceiver transmitted spread spectrum communication signals in correspondence with said power adjustment requests as received by said second transceiver in said first transceiver transmitted spread spectrum communication signals.

27. A system for controlling the transmission power of a first remote transceiver of a plurality of remote transceivers, wherein each remote transceiver is for transmitting a spread spectrum communication signal to a base transceiver within a first predetermined frequency band, said base transceiver also transmitting a spread spectrum communication signal to at least said first remote transceiver within a second predetermined frequency band, said system comprising:

first power control means for determining combined signal power of said base transceiver transmitted spread spectrum communication signal and other signals within said second predetermined frequency band as received at said first transceiver, detecting variations in said first power control means determined signal power with respect to a first predetermined transmit power level, and adjusting signal power of said first transceiver transmitted spread spectrum communication signal in response to said first power control means detected variations; and

second power control means for determining signal power of said first transceiver transmitted spread spectrum communication signal as received at said second transceiver, detecting variations in said second power control means determined signal power with respect to a second predetermined transmit power level, adjusting signal power of said first transceiver transmitted spread spectrum communication signal in response to said second power control means detected variations.

28. The system of claim 27 wherein said first power control means comprises:

Case 3:05-cv-01392-B-BLM Document 1 Filed 07/11/05 Page 44 of 177

automatic gain control means for measuring wideband signal power of said base transceiver transmitted spread spectrum communication signal and other signals within said second predetermined *frequency band as received at said first remote* transceiver, and providing a corresponding first power measurement signal;

comparator means for receiving and comparing said first power measurement signal with a first power level signal representative of said first predetermined transmit power level, and providing a corresponding first power level control signal; and

amplification means for receiving said first power level control signal and amplifying said first remote *transceiver transmitted spread spectrum communi*cation signal at a gain level determined by said first power level control signal.

29. The system of claim 28 wherein said second power control means comprises:

second power measurement means for measuring signal power of said first transceiver transmitted spread spectrum communication signal as received by said second transceiver, and providing a corresponding second power measurement signal;

second comparator means for receiving and comparing said second power measurement signal with a second power level signal representative of said second predetermined transmit power level, and providing a corresponding second power level control signal;

power command generator means for receiving said corresponding second power level control signal, generating power adjustment commands in response to said second power level control signal, and providing said power adjustment commands in said base transceiver transmitted spread spectrum communication signal to said first remote transceiver;

processing means responsive to said power adjustment commands extracted from said base transceiver transmitted spread spectrum communication signal as received at said first remote transceiver for providing a corresponding third power level control signal; and

said amplification means further for receiving said third power level control signal and further amplifying said first remote transceiver transmitted spread spectrum communication signal at a gain level determined by said third power level control signal.

30. The system of claim 27 wherein said second power control means comprises:

first power measurement means for measuring signal power of said first remote transceiver transmitted spread spectrum communication signal as received by said base transceiver, and providing a corresponding power level control signal;

first comparator means for receiving and comparing said power measurement signal with a power level signal representative of said second predetermined transmit power level, and providing a corresponding first power control signal; and

power command generator means for receiving said corresponding first power level control signal, generating power adjustment commands in response to said first power level control signal, and providing said power adjustment commands in said base transceiver transmitted spread spectrum communication signal to said first remote transceiver;

processing means responsive to said power adjustment commands extracted from said base transceiver transmitted spread spectrum communication signal as received at said first remote transceiver for providing a corresponding second power level *control signal; and*

amplification means for receiving said second power level control signal and amplifying said first remote transceiver transmitted spread spectrum communication signal at a gain level determined by said second power level control signal.

* * * * *

US005568483A

United States Patent [19]

Padovani et al.

[11] Patent Number: 5,568,483

[45] Date of Patent: Oct. 22, 1996

[54] METHOD AND APPARATUS FOR THE FORMATTING OF DATA FOR TRANSMISSION

[75] Inventors: Roberto Padovani; Edward G. Tiedemann, Jr., both of San Diego; Joseph P. Odenwalder, Del Mar, all of Calif.; Ephraim Zehavi, Haifa, Israel; Charles E. Wheatley, III, Del Mar, Calif.

[73] Assignee: Qualcomm Incorporated, San Diego, Calif.

[21] Appl. No.: 374,444

[22] Filed: Jan. 17, 1995

Related U.S. Application Data

[63] Continuation-in-part of Ser. No. 171,146, Dec. 21, 1993, Pat. No. 5,504,773, which is a continuation of Ser. No. 822,164, Jan. 16, 1992, abandoned, which is a continuation-in-part of Ser. No. 543,496, Jun. 25, 1990, Pat. No. 5,103,459.

[51] Int. Cl.[6] H04J 3/22

[52] U.S. Cl. 370/84; 370/111; 375/240

[58] Field of Search 341/61; 348/384, 348/390; 370/79, 82, 84, 99, 102, 110.1, 111; 371/49.1; 381/29, 30; 395/2, 2.1, 2.38; 455/72; 375/240, 241, 249

[56] References Cited

U.S. PATENT DOCUMENTS

3,310,631	3/1967	Brown	370/110.1
4,291,409	9/1981	Weinberg et al.	375/209
4,688,035	8/1987	Gray et al.	340/825.52
4,813,040	3/1989	Futato	370/111
5,003,533	3/1991	Watanabe	370/85.5
5,022,046	6/1991	Morrow, Jr.	375/206
5,068,849	11/1991	Tanaka	370/85.5
5,136,586	8/1992	Greenblatt	370/110.4
5,150,387	9/1992	Yoshikawa et al.	375/240
5,212,684	5/1993	MacNamee et al.	370/24
5,218,639	6/1993	Osterweil	375/240
5,258,983	11/1993	Lane et al.	370/118
5,455,841	10/1995	Hazu	375/240

FOREIGN PATENT DOCUMENTS

0412583	2/1991	European Pat. Off. .
0418865	3/1991	European Pat. Off. .
0444592	9/1991	European Pat. Off. .
2022365	12/1979	United Kingdom .
2182528	5/1987	United Kingdom .
9107030	5/1991	WIPO .

Primary Examiner—Benedict V. Safourek
Attorney, Agent, or Firm—Russell B. Miller; Sean English

[57] ABSTRACT

A method and apparatus for arranging various types of data, and at various rates, into a uniquely structured format for transmission. Data for transmission formatting may be vocoder data or different types of non-vocoder data. The data organized into frames of a predetermined time duration for transmission. The data frames are organized, depending on the data, to be at one of several data rates. Vocoder data is provided at one of several data rates and is organized in the frame according to a predetermined format. Frames may be formatted with a sharing of vocoder data with non-vocoder data to be at a highest frame data rate. Different types of non-vocoder data may be organized so as to also be at the highest frame data rate. Additional control data may be provided within the data frames to support various aspects of the transmission and recovery upon reception.

77 Claims, 22 Drawing Sheets

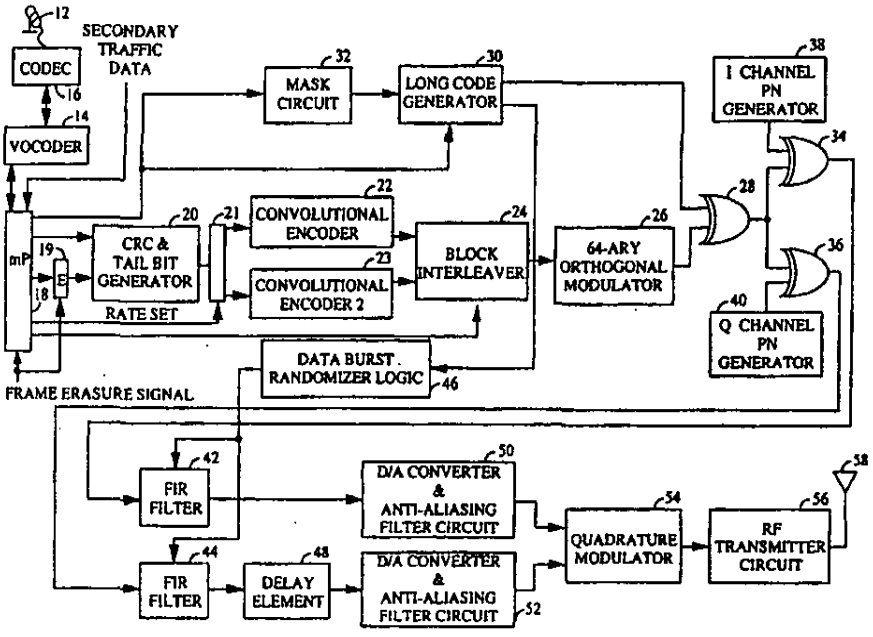

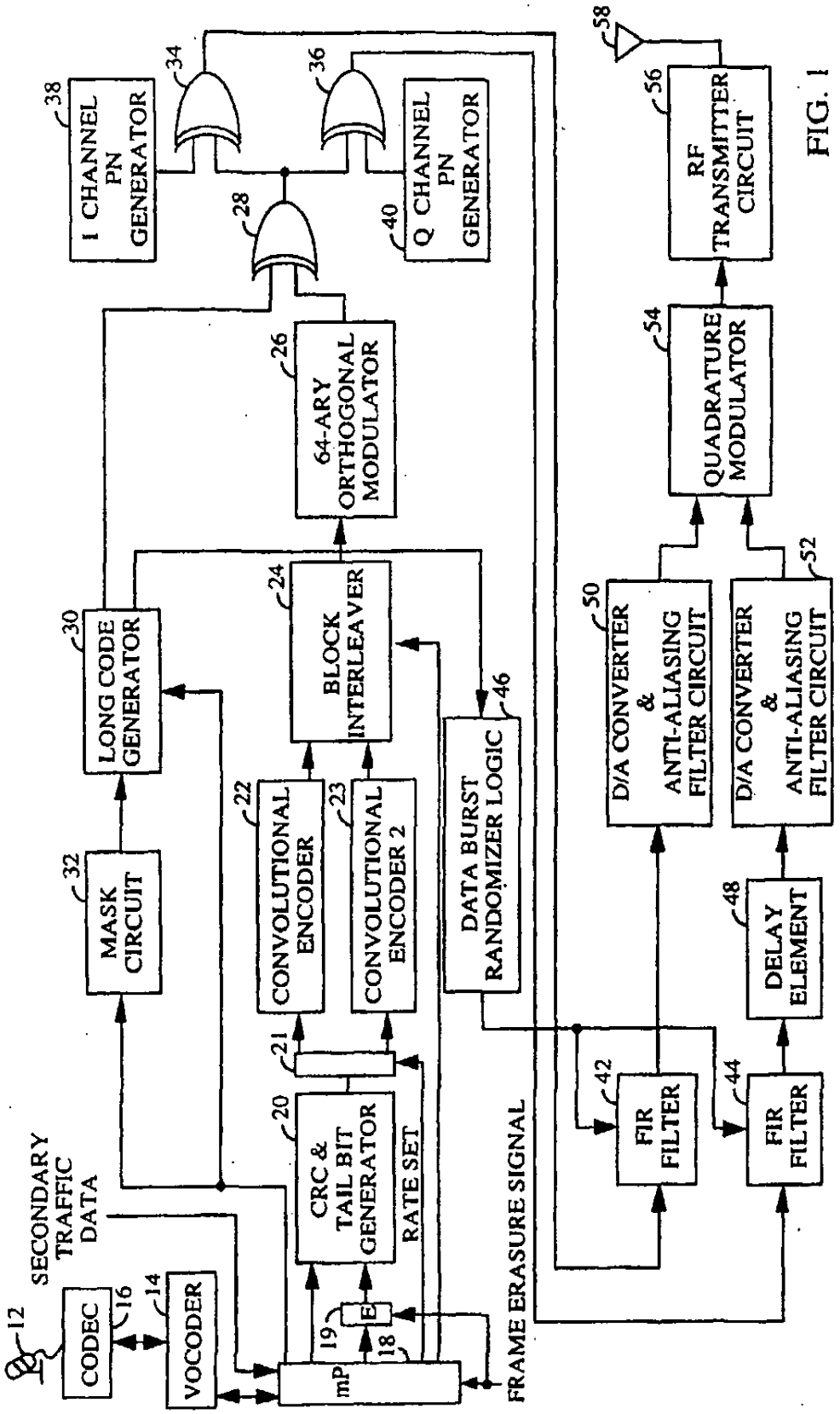
I CHANNEL PN GENERATOR
38
34
36
Q CHANNEL PN GENERATOR
40
28
58
RF TRANSMITTER CIRCUIT
56
64-ARY ORTHOGONAL MODULATOR
26
QUADRATURE MODULATOR
54
BLOCK INTERLEAVER
24
LONG CODE GENERATOR
30
D/A CONVERTER & ANTI-ALIASING FILTER CIRCUIT
50
D/A CONVERTER & ANTI-ALIASING FILTER CIRCUIT
52
DATA BURST RANDOMIZER LOGIC
46
MASK CIRCUIT
32
CONVOLUTIONAL ENCODER
22
CONVOLUTIONAL ENCODER 2
23
DELAY ELEMENT
48
21
FIR FILTER
42
FIR FILTER
44
CRC & TAIL BIT GENERATOR
20
RATE SET
SECONDARY TRAFFIC DATA
CODEC
12
16
VOCODER
14
19
E
18
mP
FRAME ERASURE SIGNAL

FIG. 1

FIG. 2a
9600 BPS PRIMARY TRAFFIC ONLY

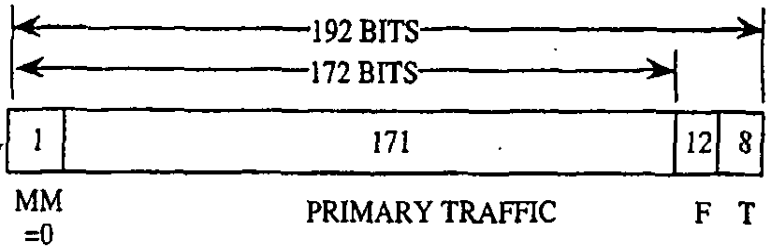

FIG. 2b
9600 BPS DIM AND BURST WITH RATE 1/2 PRIMARY AND SIGNALING TRAFFIC

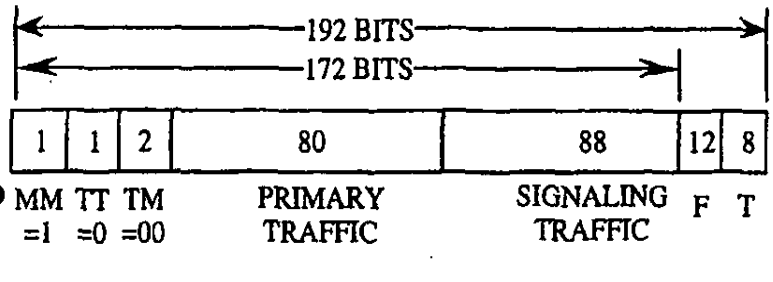

FIG. 2c
9600 BPS DIM AND BURST WITH RATE 1/4 PRIMARY AND SIGNALING TRAFFIC

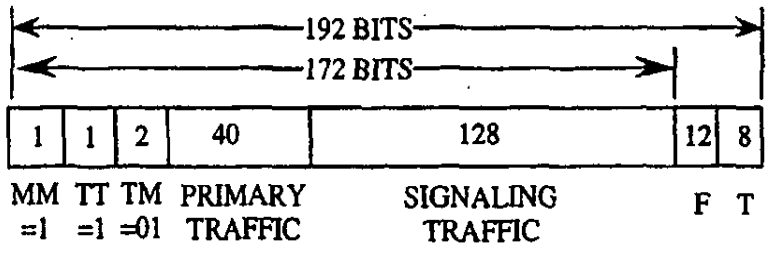

FIG. 2d
9600 BPS DIM AND BURST WITH RATE 1/8 PRIMARY AND SIGNALING TRAFFIC

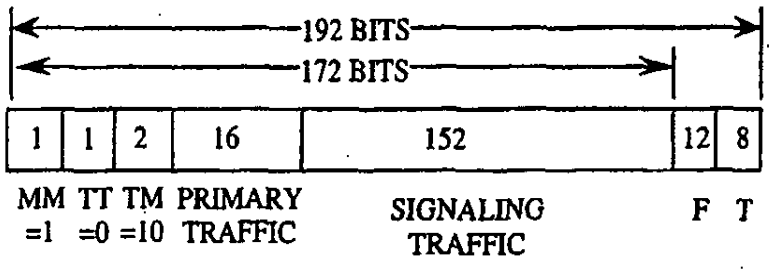

FIG. 2e
9600 BPS BLANK AND BURST WITH SIGNALING TRAFFIC ONLY

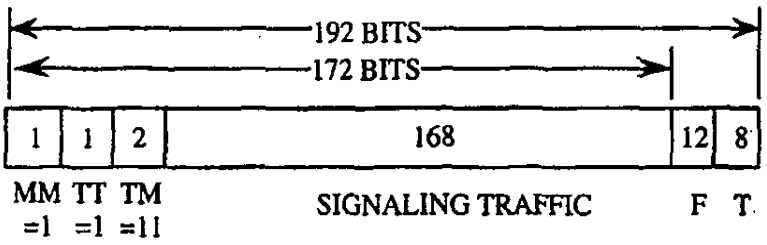

FIG. 2F
4.8 KBPS FRAME FORMAT

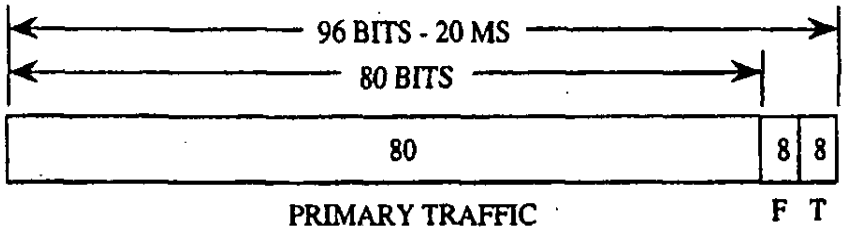

FIG. 2G
2.4 KBPS FRAME FORMAT

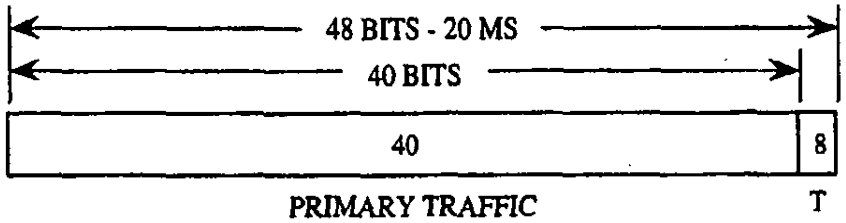

FIG. 2H
1.2 KBPS FRAME FORMAT

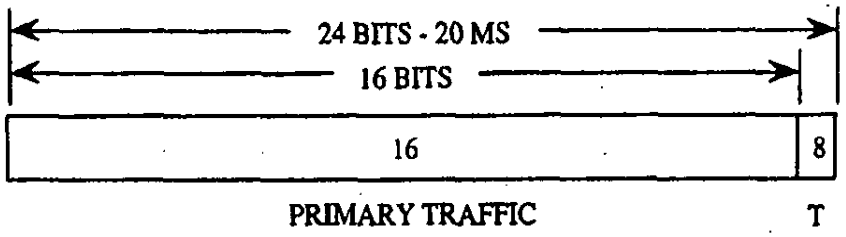

FIG. 2I

9600 BPS DIM AND BURST WITH RATE 1/2 PRIMARY AND SECONDARY TRAFFIC

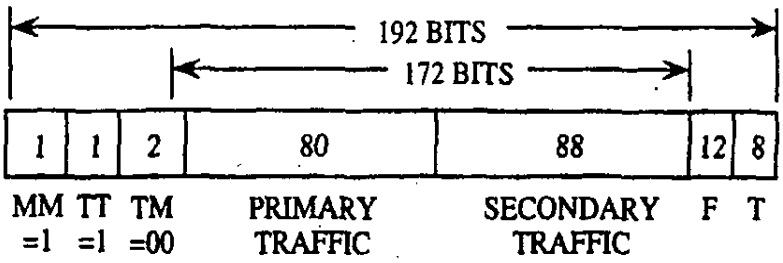

FIG. 2J

9600 BPS DIM AND BURST WITH RATE 1/4 PRIMARY AND SECONDARY TRAFFIC

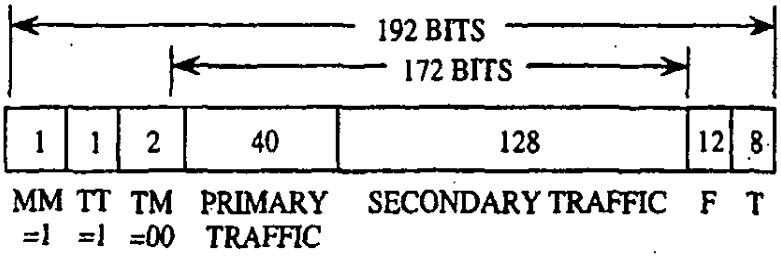

FIG. 2K

9600 BPS DIM AND BURST WITH RATE 1/8 PRIMARY AND SECONDARY TRAFFIC

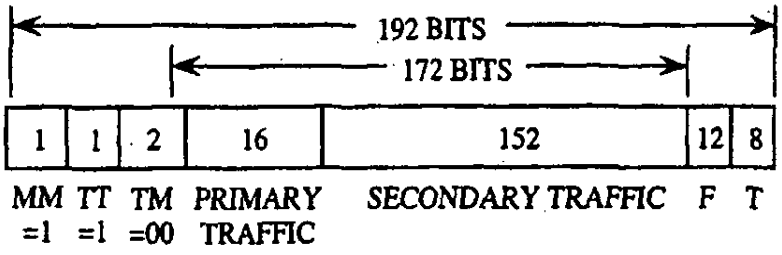

FIG. 2L

9600 BPS BLANK AND BURST WITH SECONDARY TRAFFIC ONLY

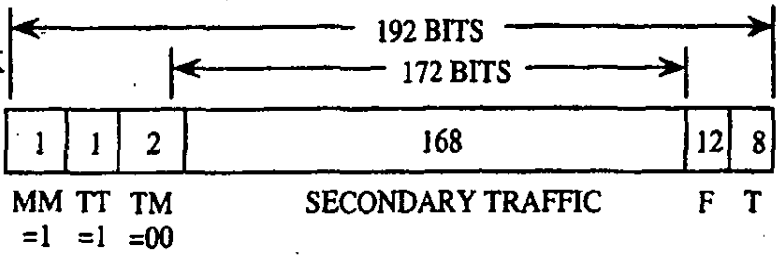

NOTATION

MM	MIXED MODE BIT
TT	TRAFFIC TYPE BIT
TM	TRAFFIC MODE BITS
F	FRAME QUALITY INDICATOR (CRC) BITS
T	ENCODER TAIL BITS

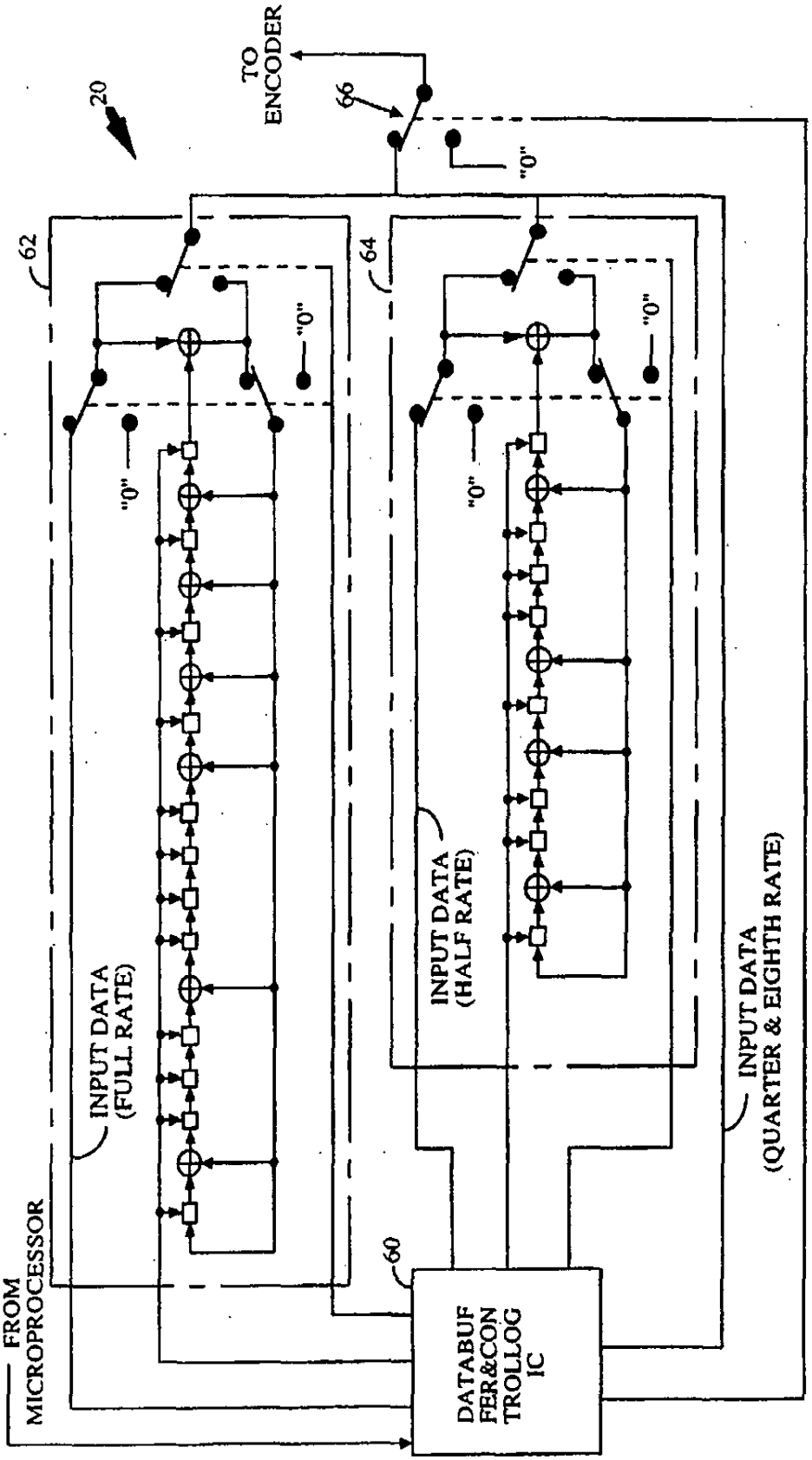
TO ENCODER
20
66
"0"
62
64
"0"
"0"
"0"
"0"
INPUT DATA (FULL RATE)
INPUT DATA (HALF RATE)
INPUT DATA (QUARTER & EIGHTH RATE)
FROM MICROPROCESSOR
60
DATABUFFER&CONTROLLOG IC

FIG. 3

FIG. 4A

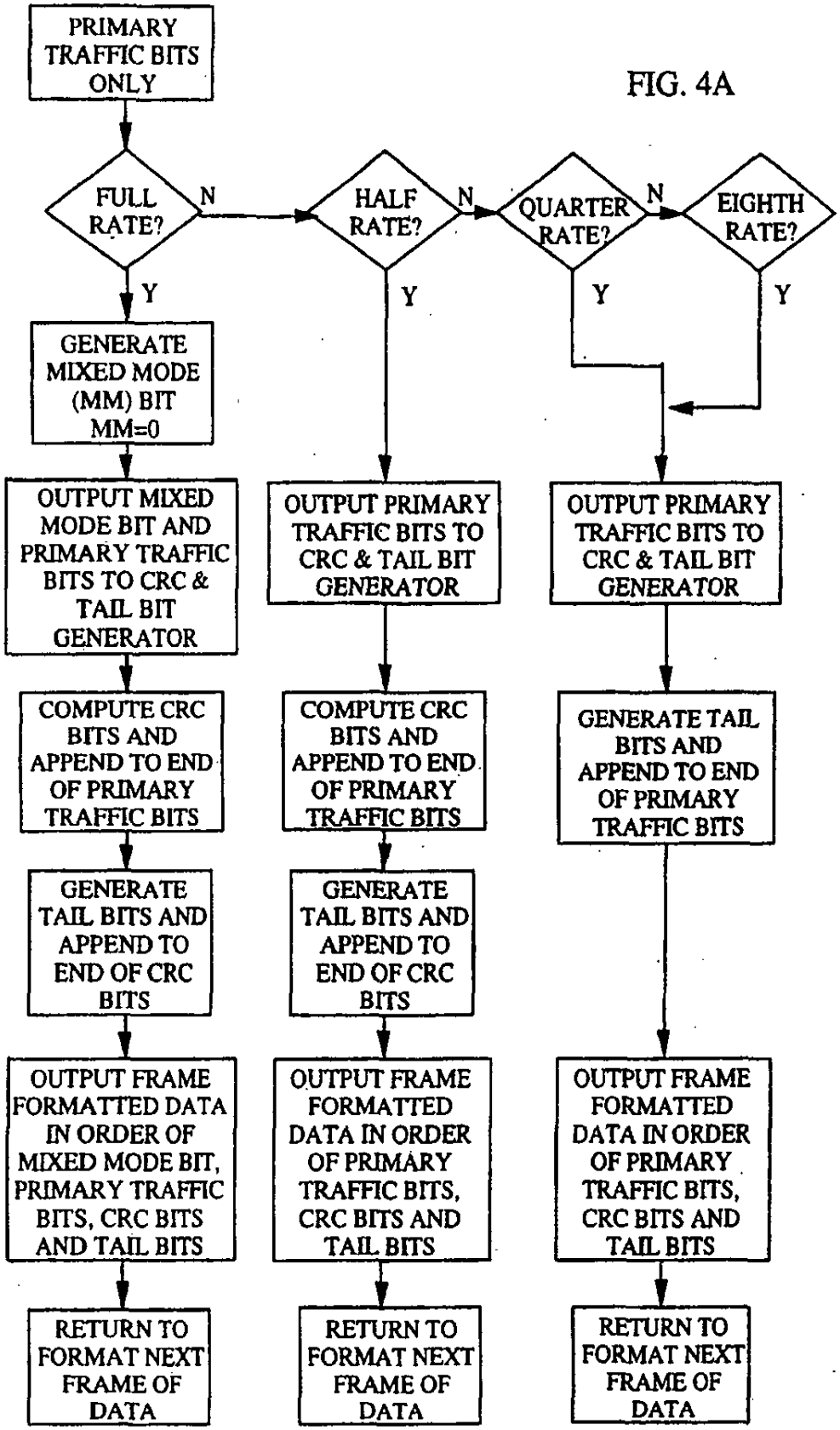
PRIMARY TRAFFIC BITS ONLY
FULL RATE?
N
HALF RATE?
N
QUARTER RATE?
N
EIGHTH RATE?
Y
Y
Y
Y
GENERATE MIXED MODE (MM) BIT MM=0
OUTPUT MIXED MODE BIT AND PRIMARY TRAFFIC BITS TO CRC & TAIL BIT GENERATOR
OUTPUT PRIMARY TRAFFIC BITS TO CRC & TAIL BIT GENERATOR
OUTPUT PRIMARY TRAFFIC BITS TO CRC & TAIL BIT GENERATOR
COMPUTE CRC BITS AND APPEND TO END OF PRIMARY TRAFFIC BITS
COMPUTE CRC BITS AND APPEND TO END OF PRIMARY TRAFFIC BITS
GENERATE TAIL BITS AND APPEND TO END OF PRIMARY TRAFFIC BITS
GENERATE TAIL BITS AND APPEND TO END OF CRC BITS
GENERATE TAIL BITS AND APPEND TO END OF CRC BITS
OUTPUT FRAME FORMATTED DATA IN ORDER OF MIXED MODE BIT, PRIMARY TRAFFIC BITS, CRC BITS AND TAIL BITS
OUTPUT FRAME FORMATTED DATA IN ORDER OF PRIMARY TRAFFIC BITS, CRC BITS AND TAIL BITS
OUTPUT FRAME FORMATTED DATA IN ORDER OF PRIMARY TRAFFIC BITS, CRC BITS AND TAIL BITS
RETURN TO FORMAT NEXT FRAME OF DATA
RETURN TO FORMAT NEXT FRAME OF DATA
RETURN TO FORMAT NEXT FRAME OF DATA

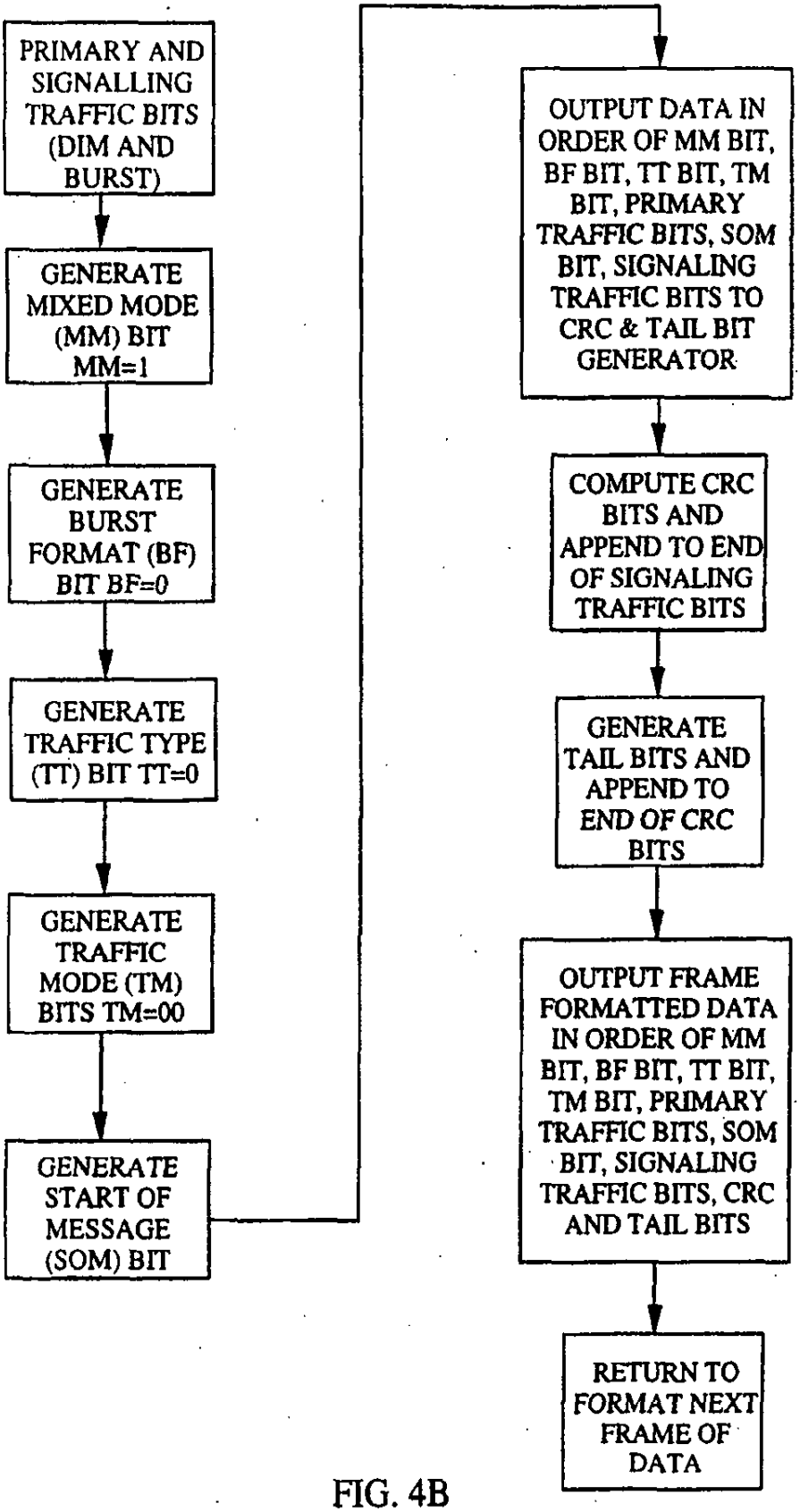
PRIMARY AND SIGNALLING TRAFFIC BITS (DIM AND BURST)
GENERATE MIXED MODE (MM) BIT MM=1
GENERATE BURST FORMAT (BF) BIT BF=0
GENERATE TRAFFIC TYPE (TT) BIT TT=0
GENERATE TRAFFIC MODE (TM) BITS TM=00
GENERATE START OF MESSAGE (SOM) BIT
OUTPUT DATA IN ORDER OF MM BIT, BF BIT, TT BIT, TM BIT, PRIMARY TRAFFIC BITS, SOM BIT, SIGNALING TRAFFIC BITS TO CRC & TAIL BIT GENERATOR
COMPUTE CRC BITS AND APPEND TO END OF SIGNALING TRAFFIC BITS
GENERATE TAIL BITS AND APPEND TO END OF CRC BITS
OUTPUT FRAME FORMATTED DATA IN ORDER OF MM BIT, BF BIT, TT BIT, TM BIT, PRIMARY TRAFFIC BITS, SOM BIT, SIGNALING TRAFFIC BITS, CRC AND TAIL BITS
RETURN TO FORMAT NEXT FRAME OF DATA

FIG. 4B

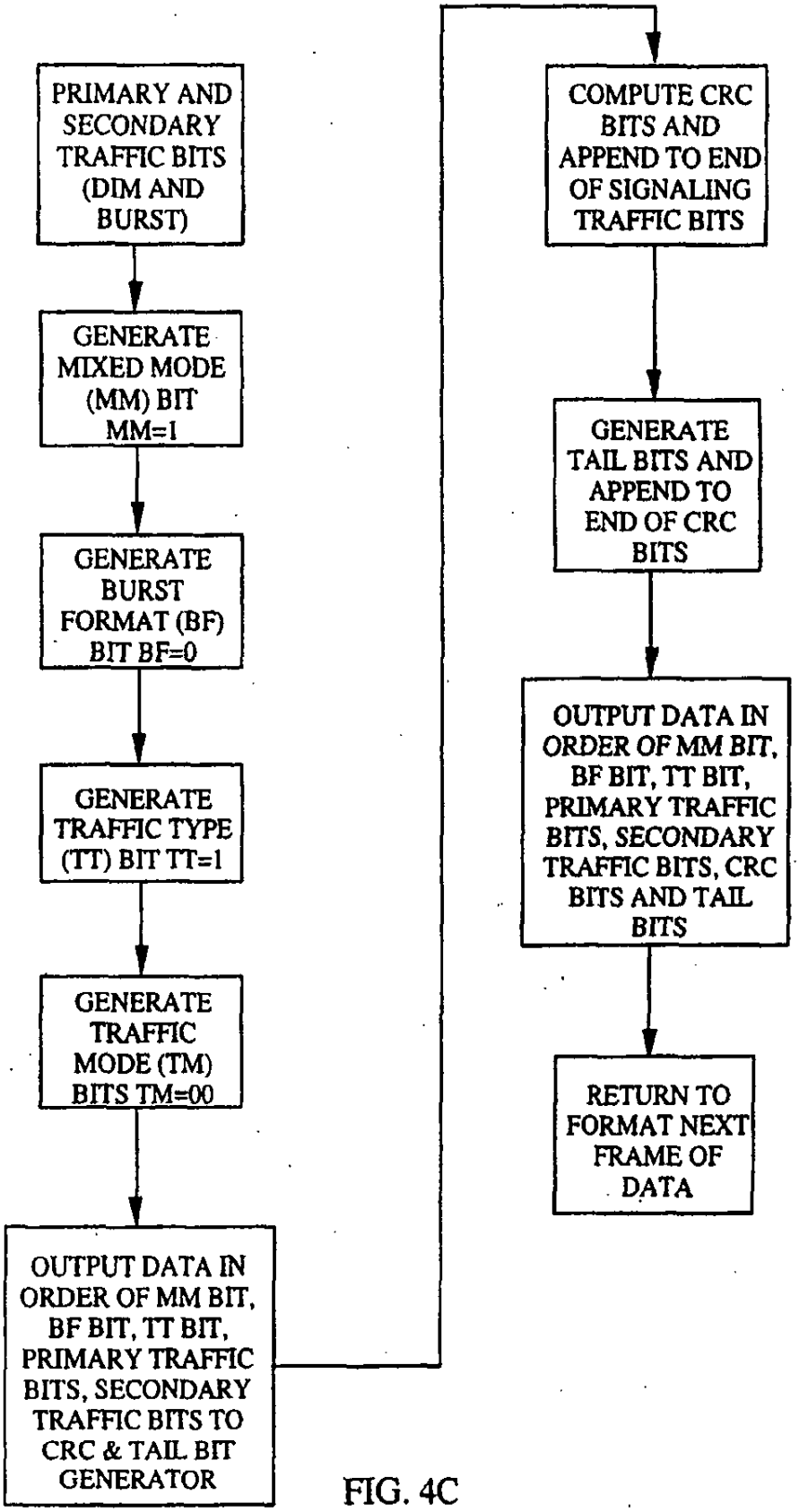
PRIMARY AND SECONDARY TRAFFIC BITS (DIM AND BURST)
GENERATE MIXED MODE (MM) BIT MM=1
GENERATE BURST FORMAT (BF) BIT BF=0
GENERATE TRAFFIC TYPE (TT) BIT TT=1
GENERATE TRAFFIC MODE (TM) BITS TM=00
OUTPUT DATA IN ORDER OF MM BIT, BF BIT, TT BIT, PRIMARY TRAFFIC BITS, SECONDARY TRAFFIC BITS TO CRC & TAIL BIT GENERATOR
COMPUTE CRC BITS AND APPEND TO END OF SIGNALING TRAFFIC BITS
GENERATE TAIL BITS AND APPEND TO END OF CRC BITS
OUTPUT DATA IN ORDER OF MM BIT, BF BIT, TT BIT, PRIMARY TRAFFIC BITS, SECONDARY TRAFFIC BITS, CRC BITS AND TAIL BITS
RETURN TO FORMAT NEXT FRAME OF DATA

FIG. 4C

Case 3:05-cv-01392-B-BLM Document 1 Filed 07/11/05 Page 55 of 177

1	33	65	97	129	161	193	225	257	289	321	353	385	417	449	481	513	545
2	34	66	98	130	162	194	226	258	290	322	354	386	418	450	482	514	546
3	35	67	99	131	163	195	227	259	291	323	355	387	419	451	483	515	547
4	36	68	100	132	164	196	228	260	292	324	356	388	420	452	484	516	548
5	37	69	101	133	165	197	229	261	293	325	357	389	421	453	485	517	549
6	38	70	102	134	166	198	230	262	294	326	358	390	422	454	486	518	550
7	39	71	103	135	167	199	231	263	295	327	359	391	423	455	487	519	551
8	40	72	104	136	168	200	232	264	296	328	360	392	424	456	488	520	552
9	41	73	105	137	169	201	233	265	297	329	361	393	425	457	489	521	553
10	42	74	106	138	170	202	234	266	298	330	362	394	426	458	490	522	554
11	43	75	107	139	171	203	235	267	299	331	363	395	427	459	491	523	555
12	44	76	108	140	172	204	236	268	300	332	364	396	428	460	492	524	556
13	45	77	109	141	173	205	237	269	301	333	365	397	429	461	493	525	557
14	46	78	110	142	174	206	238	270	302	334	366	398	430	462	494	526	558
15	47	79	111	143	175	207	239	271	303	335	367	399	431	463	495	527	559
16	48	80	112	144	176	208	240	272	304	336	368	400	432	464	496	528	560
17	49	81	113	145	177	209	241	273	305	337	369	401	433	465	497	529	561
18	50	82	114	146	178	210	242	274	306	338	370	402	434	466	498	530	562
19	51	83	115	147	179	211	243	275	307	339	371	403	435	467	499	531	563
20	52	84	116	148	180	212	244	276	308	340	372	404	436	468	500	532	564
21	53	85	117	149	181	213	245	277	309	341	373	405	437	469	501	533	565
22	54	86	118	150	182	214	246	278	310	342	374	406	438	470	502	534	566
23	55	87	119	151	183	215	247	279	311	343	375	407	439	471	503	535	567
24	56	88	120	152	184	216	248	280	312	344	376	408	440	472	504	536	568
25	57	89	121	153	185	217	249	281	313	345	377	409	441	473	505	537	569
26	58	90	122	154	186	218	250	282	314	346	378	410	442	474	506	538	570
27	59	91	123	155	187	219	251	283	315	347	379	411	443	475	507	539	571
28	60	92	124	156	188	220	252	284	316	348	380	412	444	476	508	540	572
29	61	93	125	157	189	221	253	285	317	349	381	413	445	477	509	541	573
30	62	94	126	158	190	222	254	286	318	350	382	414	446	478	510	542	574
31	63	95	127	159	191	223	255	287	319	351	383	415	447	479	511	543	575
32	64	96	128	160	192	224	256	288	320	352	384	416	448	480	512	544	576

FIG. 5A

1	17	33	49	65	81	97	113	129	145	161	177	193	209	225	241	257	273
1	17	33	49	65	81	97	113	129	145	161	177	193	209	225	241	257	273
2	18	34	50	66	82	98	114	130	146	162	178	194	210	226	242	258	274
2	18	34	50	66	82	98	114	130	146	162	178	194	210	226	242	258	274
3	19	35	51	67	83	99	115	131	147	163	179	195	211	227	243	259	275
3	19	35	51	67	83	99	115	131	147	163	179	195	211	227	243	259	275
4	20	36	52	68	84	100	116	132	148	164	180	196	212	228	244	260	276
4	20	36	52	68	84	100	116	132	148	164	180	196	212	228	244	260	276
5	21	37	53	69	85	101	117	133	149	165	181	197	213	229	245	261	277
5	21	37	53	69	85	101	117	133	149	165	181	197	213	229	245	261	277
6	22	38	54	70	86	102	118	134	150	166	182	198	214	230	246	262	278
6	22	38	54	70	86	102	118	134	150	166	182	198	214	230	246	262	278
7	23	39	55	71	87	103	119	135	151	167	183	199	215	231	247	263	279
7	23	39	55	71	87	103	119	135	151	167	183	199	215	231	247	263	279
8	24	40	56	72	88	104	120	136	152	168	184	200	216	232	248	264	280
8	24	40	56	72	88	104	120	136	152	168	184	200	216	232	248	264	280
9	25	41	57	73	89	105	121	137	153	169	185	201	217	233	249	265	281
9	25	41	57	73	89	105	121	137	153	169	185	201	217	233	249	265	281
10	26	42	58	74	90	106	122	138	154	170	186	202	218	234	250	266	282
10	26	42	58	74	90	106	122	138	154	170	186	202	218	234	250	266	282
11	27	43	59	75	91	107	123	139	155	171	187	203	219	235	251	267	283
11	27	43	59	75	91	107	123	139	155	171	187	203	219	235	251	267	283
12	28	44	60	76	92	108	124	140	156	172	188	204	220	236	252	268	284
12	28	44	60	76	92	108	124	140	156	172	188	204	220	236	252	268	284
13	29	45	61	77	93	109	125	141	157	173	189	205	221	237	253	269	285
13	29	45	61	77	93	109	125	141	157	173	189	205	221	237	253	269	285
14	30	46	62	78	94	110	126	142	158	174	190	206	222	238	254	270	286
14	30	46	62	78	94	110	126	142	158	174	190	206	222	238	254	270	286
15	31	47	63	79	95	111	127	143	159	175	191	207	223	239	255	271	287
15	31	47	63	79	95	111	127	143	159	175	191	207	223	239	255	271	287
16	32	48	64	80	96	112	128	144	160	176	192	208	224	240	256	272	288
16	32	48	64	80	96	112	128	144	160	176	192	208	224	240	256	272	288

FIG. 5B

Case 3:05-cv-01392-B-BLM Document 1 Filed 07/11/05 Page 57 of 177

1	9	17	25	33	41	49	57	65	73	81	89	97	105	113	121	129	137
1	9	17	25	33	41	49	57	65	73	81	89	97	105	113	121	129	137
1	9	17	25	33	41	49	57	65	73	81	89	97	105	113	121	129	137
1	9	17	25	33	41	49	57	65	73	81	89	97	105	113	121	129	137
2	10	18	26	34	42	50	58	66	74	82	90	98	106	114	122	130	138
2	10	18	26	34	42	50	58	66	74	82	90	98	106	114	122	130	138
2	10	18	26	34	42	50	58	66	74	82	90	98	106	114	122	130	138
2	10	18	26	34	42	50	58	66	74	82	90	98	106	114	122	130	138
3	11	19	27	35	43	51	59	67	75	83	91	99	107	115	123	131	139
3	11	19	27	35	43	51	59	67	75	83	91	99	107	115	123	131	139
3	11	19	27	35	43	51	59	67	75	83	91	99	107	115	123	131	139
3	11	19	27	35	43	51	59	67	75	83	91	99	107	115	123	131	139
4	12	20	28	36	44	52	60	68	76	84	92	100	108	116	124	132	140
4	12	20	28	36	44	52	60	68	76	84	92	100	108	116	124	132	140
4	12	20	28	36	44	52	60	68	76	84	92	100	108	116	124	132	140
4	12	20	28	36	44	52	60	68	76	84	92	100	108	116	124	132	140
5	13	21	29	37	45	53	61	69	77	85	93	101	109	117	125	133	141
5	13	21	29	37	45	53	61	69	77	85	93	101	109	117	125	133	141
5	13	21	29	37	45	53	61	69	77	85	93	101	109	117	125	133	141
5	13	21	29	37	45	53	61	69	77	85	93	101	109	117	125	133	141
6	14	22	30	38	46	54	62	70	78	86	94	102	110	118	126	134	142
6	14	22	30	38	46	54	62	70	78	86	94	102	110	118	126	134	142
6	14	22	30	38	46	54	62	70	78	86	94	102	110	118	126	134	142
6	14	22	30	38	46	54	62	70	78	86	94	102	110	118	126	134	142
7	15	23	31	39	47	55	63	71	79	87	95	103	111	119	127	135	143
7	15	23	31	39	47	55	63	71	79	87	95	103	111	119	127	135	143
7	15	23	31	39	47	55	63	71	79	87	95	103	111	119	127	135	143
7	15	23	31	39	47	55	63	71	79	87	95	103	111	119	127	135	143
8	16	24	32	40	48	56	64	72	80	88	96	104	112	120	128	136	144
8	16	24	32	40	48	56	64	72	80	88	96	104	112	120	128	136	144
8	16	24	32	40	48	56	64	72	80	88	96	104	112	120	128	136	144
8	16	24	32	40	48	56	64	72	80	88	96	104	112	120	128	136	144

FIG. 5C

1	5	9	13	17	21	25	29	33	37	41	45	49	53	57	61	65	69
1	5	9	13	17	21	25	29	33	37	41	45	49	53	57	61	65	69
1	5	9	13	17	21	25	29	33	37	41	45	49	53	57	61	65	69
1	5	9	13	17	21	25	29	33	37	41	45	49	53	57	61	65	69
1	5	9	13	17	21	25	29	33	37	41	45	49	53	57	61	65	69
1	5	9	13	17	21	25	29	33	37	41	45	49	53	57	61	65	69
1	5	9	13	17	21	25	29	33	37	41	45	49	53	57	61	65	69
1	5	9	13	17	21	25	29	33	37	41	45	49	53	57	61	65	69
2	6	10	14	18	22	26	30	34	38	42	46	50	54	58	62	66	70
2	6	10	14	18	22	26	30	34	38	42	46	50	54	58	62	66	70
2	6	10	14	18	22	26	30	34	38	42	46	50	54	58	62	66	70
2	6	10	14	18	22	26	30	34	38	42	46	50	54	58	62	66	70
2	6	10	14	18	22	26	30	34	38	42	46	50	54	58	62	66	70
2	6	10	14	18	22	26	30	34	38	42	46	50	54	58	62	66	70
2	6	10	14	18	22	26	30	34	38	42	46	50	54	58	62	66	70
2	6	10	14	18	22	26	30	34	38	42	46	50	54	58	62	66	70
3	7	11	15	19	23	27	31	35	39	43	47	51	55	59	63	67	71
3	7	11	15	19	23	27	31	35	39	43	47	51	55	59	63	67	71
3	7	11	15	19	23	27	31	35	39	43	47	51	55	59	63	67	71
3	7	11	15	19	23	27	31	35	39	43	47	51	55	59	63	67	71
3	7	11	15	19	23	27	31	35	39	43	47	51	55	59	63	67	71
3	7	11	15	19	23	27	31	35	39	43	47	51	55	59	63	67	71
3	7	11	15	19	23	27	31	35	39	43	47	51	55	59	63	67	71
3	7	11	15	19	23	27	31	35	39	43	47	51	55	59	63	67	71
4	8	12	16	20	24	28	32	36	40	44	48	52	56	60	64	68	72
4	8	12	16	20	24	28	32	36	40	44	48	52	56	60	64	68	72
4	8	12	16	20	24	28	32	36	40	44	48	52	56	60	64	68	72
4	8	12	16	20	24	28	32	36	40	44	48	52	56	60	64	68	72
4	8	12	16	20	24	28	32	36	40	44	48	52	56	60	64	68	72
4	8	12	16	20	24	28	32	36	40	44	48	52	56	60	64	68	72
4	8	12	16	20	24	28	32	36	40	44	48	52	56	60	64	68	72
4	8	12	16	20	24	28	32	36	40	44	48	52	56	60	64	68	72

FIG. 5D

Case 3:05-cv-01392-B-BLM Document 1 Filed 07/11/05 Page 59 of 177

WALSH CHIP WITHIN SYMBOL

WALSH SYMBOL INDEX	0123	4567	89ab	cdef	0123	4567	89ab	cdef	0123	4567	89ab	cdef	0123	4567	89ab	cdef	0123	4567	89ab	cdef	0123	4567	89ab	cdef
0	0000	0000	0000	0000	0000	0000	0000	0000	0000	0000	0000	0000	0000	0000	0000	0000	0000	0000	0000	0000	0000	0000	0000	0000
1	0101	0101	0101	0101	0101	0101	0101	0101	0101	0101	0101	0101	0101	0101	0101	0101	0101	0101	0101	0101	0101	0101	0101	0101
2	0011	0011	0011	0011	0011	0011	0011	0011	0011	0011	0011	0011	0011	0011	0011	0011	0011	0011	0011	0011	0011	0011	0011	0011
3	0110	0110	0110	0110	0110	0110	0110	0110	0110	0110	0110	0110	0110	0110	0110	0110	0110	0110	0110	0110	0110	0110	0110	0110
4	0000	1111	0000	1111	0000	1111	0000	1111	0000	1111	0000	1111	0000	1111	0000	1111	0000	1111	0000	1111	0000	1111	0000	1111
5	0101	1010	0101	1010	0101	1010	0101	1010	0101	1010	0101	1010	0101	1010	0101	1010	0101	1010	0101	1010	0101	1010	0101	1010
6	0011	1100	0011	1100	0011	1100	0011	1100	0011	1100	0011	1100	0011	1100	0011	1100	0011	1100	0011	1100	0011	1100	0011	1100
7	0110	1001	0110	1001	0110	1001	0110	1001	0110	1001	0110	1001	0110	1001	0110	1001	0110	1001	0110	1001	0110	1001	0110	1001
8	0000	0000	1111	1111	0000	0000	1111	1111	0000	0000	1111	1111	0000	0000	1111	1111	0000	0000	1111	1111	0000	0000	1111	1111
9	0101	0101	1010	1010	0101	0101	1010	1010	0101	0101	1010	1010	0101	0101	1010	1010	0101	0101	1010	1010	0101	0101	1010	1010
10	0011	0011	1100	1100	0011	0011	1100	1100	0011	0011	1100	1100	0011	0011	1100	1100	0011	0011	1100	1100	0011	0011	1100	1100
11	0110	0110	1001	1001	0110	0110	1001	1001	0110	0110	1001	1001	0110	0110	1001	1001	0110	0110	1001	1001	0110	0110	1001	1001
12	0000	1111	1111	0000	0000	1111	1111	0000	0000	1111	1111	0000	0000	1111	1111	0000	0000	1111	1111	0000	0000	1111	1111	0000
13	0101	1010	1010	0101	0101	1010	1010	0101	0101	1010	1010	0101	0101	1010	1010	0101	0101	1010	1010	0101	0101	1010	1010	0101
14	0011	1100	1100	0011	0011	1100	1100	0011	0011	1100	1100	0011	0011	1100	1100	0011	0011	1100	1100	0011	0011	1100	1100	0011
15	0110	1001	1001	0110	0110	1001	1001	0110	0110	1001	1001	0110	0110	1001	1001	0110	0110	1001	1001	0110	0110	1001	1001	0110
16	0000	0000	0000	0000	1111	1111	1111	1111	0000	0000	0000	0000	1111	1111	1111	1111	0000	0000	0000	0000	1111	1111	1111	1111
17	0101	0101	0101	0101	1010	1010	1010	1010	0101	0101	0101	0101	1010	1010	1010	1010	0101	0101	0101	0101	1010	1010	1010	1010
18	0011	0011	0011	0011	1100	1100	1100	1100	0011	0011	0011	0011	1100	1100	1100	1100	0011	0011	0011	0011	1100	1100	1100	1100
19	0110	0110	0110	0110	1001	1001	1001	1001	0110	0110	0110	0110	1001	1001	1001	1001	0110	0110	0110	0110	1001	1001	1001	1001
20	0000	1111	0000	1111	1111	0000	1111	0000	0000	1111	0000	1111	1111	0000	1111	0000	0000	1111	0000	1111	1111	0000	1111	0000
21	0101	1010	0101	1010	1010	0101	1010	0101	0101	1010	0101	1010	1010	0101	1010	0101	0101	1010	0101	1010	1010	0101	1010	0101
22	0011	1100	0011	1100	1100	0011	1100	0011	0011	1100	0011	1100	1100	0011	1100	0011	0011	1100	0011	1100	1100	0011	1100	0011
23	0110	1001	0110	1001	1001	0110	1001	0110	0110	1001	0110	1001	1001	0110	1001	0110	0110	1001	0110	1001	1001	0110	1001	0110

FIG. 6A

WALSH CHIP WITHIN SYMBOL

WALSH SYMBOL INDEX	0123	4567	11 8901	1111 2345	1111 6789	2222 0123	2222 4567	2233 8901	3333 2345	3333 6789	4444 0123	4444 4567	4455 8901	5555 2345	5555 6789	6666 0123
24	0000	0000	1111	1111	1111	1111	0000	0000	0000	0000	1111	1111	1111	1111	0000	0000
25	0101	0101	1010	1010	1010	1010	0101	0101	0101	0101	1010	1010	1010	1010	0101	0101
26	0011	0011	1100	1100	1100	1100	0011	0011	0011	0011	1100	1100	1100	1100	0011	0011
27	0110	0110	1001	1001	1001	1001	0110	0110	0110	0110	1001	1001	1001	1001	0110	0110
28	0000	1111	1111	0000	1111	0000	0000	1111	0000	1111	1111	0000	1111	0000	0000	1111
29	0101	1010	1010	0101	1010	0101	0101	1010	0101	1010	1010	0101	1010	0101	0101	1010
30	0011	1100	1100	0011	1100	0011	0011	1100	0011	1100	1100	0011	1100	0011	0011	1100
31	0110	1001	1001	0011	1001	0110	0110	1001	0110	1001	1001	0110	1001	0110	0110	1001
32	0000	0000	0000	0000	0000	0000	0000	0000	1111	1111	1111	1111	1111	1111	1111	1111
33	0101	0101	0101	0101	0101	0101	0101	0101	1010	1010	1010	1010	1010	1010	1010	1010
34	0011	0011	0011	0011	0011	0011	0011	0011	1100	1100	1100	1100	1100	1100	1100	1100
35	0110	0110	0110	0110	0110	0110	0110	0110	1001	1001	1001	1001	1001	1001	1001	1001
36	0000	1111	0000	1111	0000	1111	0000	1111	1111	0000	1111	0000	1111	0000	1111	0000
37	0101	1010	0101	1010	0101	1010	0101	1010	1010	0101	1010	0101	1010	0101	1010	0101
38	0011	1100	0011	1100	0011	1100	0011	1100	1100	0011	1100	0011	1100	0011	1100	0011
39	0110	1001	0110	1001	0110	1001	0110	1001	1001	0110	1001	0110	1001	0110	1001	0110
40	0000	0000	1111	1111	0000	0000	1111	1111	1111	1111	0000	0000	1111	1111	0000	0000
41	0101	0101	1010	1010	0101	0101	1010	1010	1010	1010	0101	0101	1010	1010	0101	0101
42	0011	0011	1100	1100	0011	0011	1100	1100	1100	1100	0011	0011	1100	1100	0011	0011
43	0110	0110	1001	1001	0110	0110	1001	1001	1001	1001	0110	0110	1001	1001	0110	0110
44	0000	1111	1111	0000	0000	1111	1111	0000	1111	0000	0000	1111	1111	0000	0000	1111
45	0101	1010	1010	0101	0101	1010	1010	0101	1010	0101	0101	1010	1010	0101	0101	1010
46	0011	1100	1100	0011	0011	1100	1100	0011	1100	0011	0011	1100	1100	0011	0011	1100
47	0110	1001	1001	0110	0110	1001	1001	0110	1001	0110	0110	1001	1001	0110	0110	1001

FIG. 6B

Case 3:05-cv-01392-B-BLM Document 1 Filed 07/11/05 Page 61 of 177

WALSH CHIP WITHIN SYMBOL

WALSH SYMBOL INDEX	0123	4567	11 8901	1111 2345	1111 6789	2222 0123	2222 4567	2233 8901	3333 2345	3333 6789	4444 0123	4444 4567	4455 8901	5555 2345	5555 6789	6666 0123
48	0000	0000	0000	0000	1111	1111	1111	1111	1111	1111	1111	1111	0000	0000	0000	0000
49	0101	0101	0101	0101	1010	1010	1010	0101	1010	1010	1010	1010	0101	0101	0101	0101
50	0011	0011	0011	0011	1100	1100	1100	1100	1100	1100	1100	1100	0011	0011	0011	0011
51	0110	0110	0110	0110	1001	1001	1001	0110	1001	1001	1001	1001	0110	0110	0110	0110
52	0000	1111	0000	1111	1111	0000	1111	0000	1111	0000	1111	0000	0000	1111	0000	1111
53	0101	1010	0101	1010	1010	0101	1010	0101	1010	0101	1010	0101	0101	1010	0101	1010
54	0011	1100	0011	1100	1100	0011	1100	0011	1100	0011	1100	0011	0011	1100	0011	1100
55	0110	1001	0110	1001	1001	0110	1001	0110	1001	0110	1001	0110	0110	1001	0110	1001
56	0000	0000	1111	1111	1111	1111	0000	0000	1111	1111	0000	0000	0000	0000	1111	1111
57	0101	0101	1010	1010	1010	1010	0101	0101	1010	1010	0101	0101	0101	0101	1010	1010
58	0011	0011	1100	1100	1100	1100	0011	0011	1100	1100	0011	0011	0011	0011	1100	1100
59	0110	0110	1001	1001	1001	1001	0110	0110	1001	1001	0110	0110	0110	0110	1001	1001
60	0000	1111	1111	0000	1111	0000	0000	1111	1111	0000	0000	1111	0000	1111	1111	0000
61	0101	1010	1010	0101	1010	0101	0101	1010	1010	0101	0101	1010	0101	1010	1010	0101
62	0011	1100	1100	0011	1100	0011	0011	1100	1100	0011	0011	1100	0011	1100	1100	0011
63	0110	1001	1001	0110	1001	0110	0110	1001	1001	0110	0110	1001	0110	1001	1001	0110

FIG. 6C

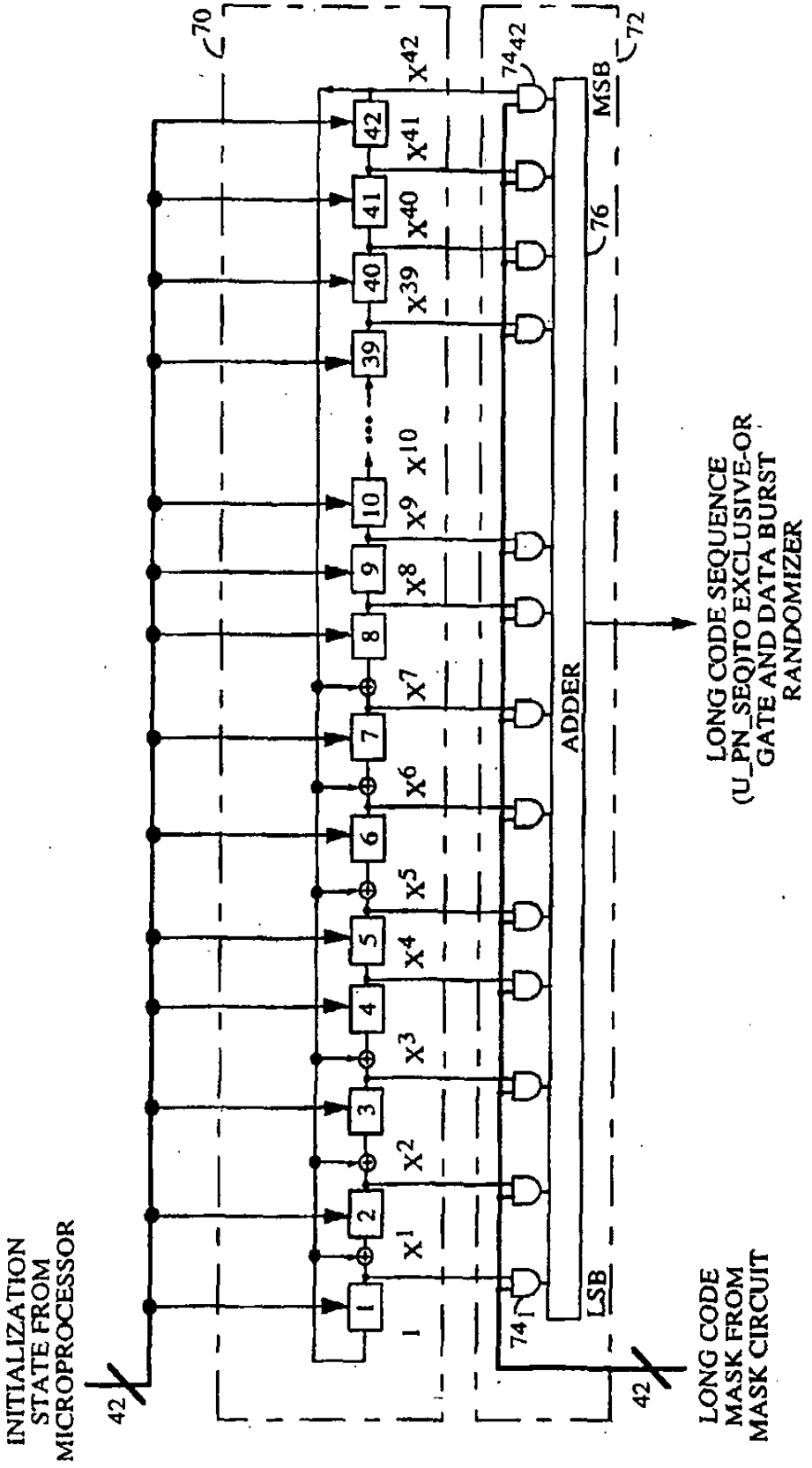
70
72
74
42
MSB
LSB
76
ADDER
INITIALIZATION STATE FROM MICROPROCESSOR
LONG CODE MASK FROM MASK CIRCUIT
LONG CODE SEQUENCE (U_PN_SEQ)TO EXCLUSIVE-OR GATE AND DATA BURST RANDOMIZER

FIG. 7

ACCESS CHANNEL LONG CODE MASK

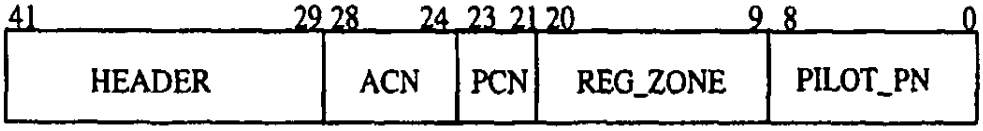

FIG. 8A

PUBLIC LONG CODE MASK



FIG. 8B

PRIVATE LONG CODE MASK

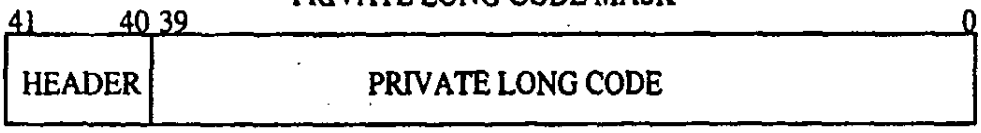

FIG. 8C

FIG. 9A

14400 BPS PRIMARY TRAFFIC ONLY

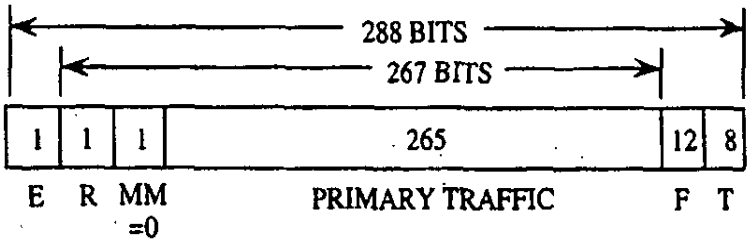

FIG. 9B

14400 BPS DIM AND BURST WITH RATE 1/2 PRIMARY AND SIGNALING TRAFFIC

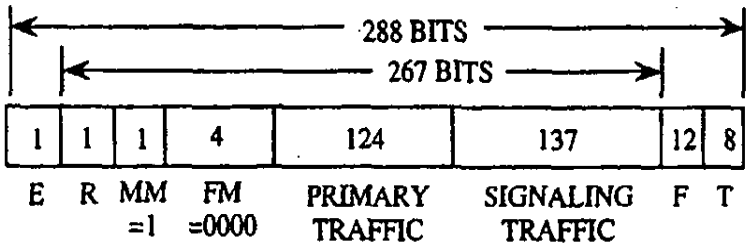

FIG. 9C

14400 BPS DIM AND BURST WITH RATE 1/4 PRIMARY AND SIGNALING TRAFFIC

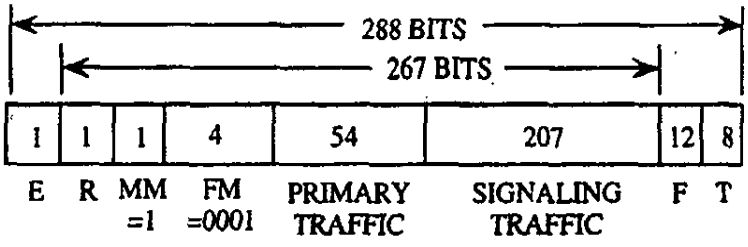

FIG. 9D

14400 BPS DIM AND BURST WITH RATE 1/8 PRIMARY AND SIGNALING TRAFFIC

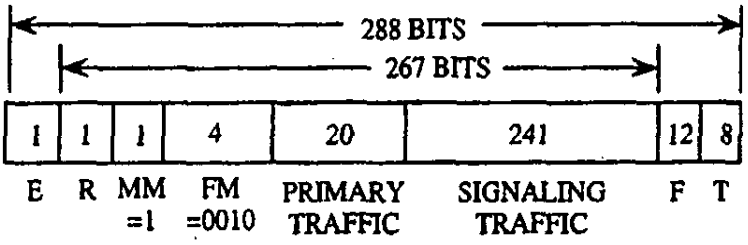

FIG. 9E

14400 BPS BLANK AND BURST WITH SIGNALING TRAFFIC ONLY

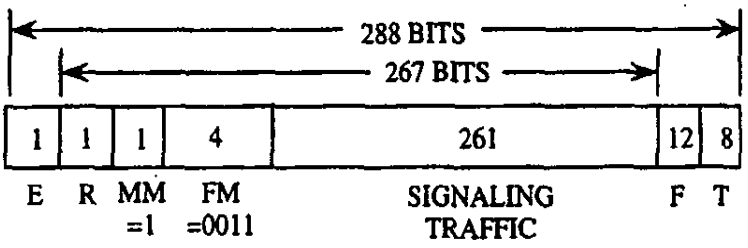

FIG. 9F

7200 BPS PRIMARY TRAFFIC ONLY

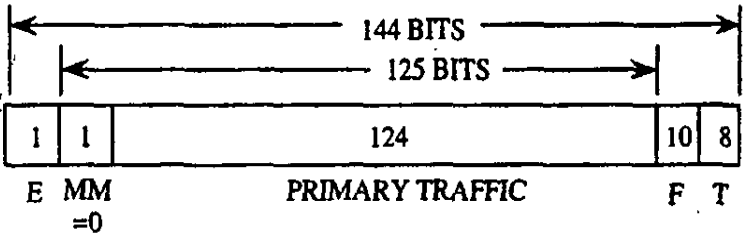

FIG. 9G

7200 BPS DIM AND BURST WITH RATE 1/4 PRIMARY AND SIGNALING TRAFFIC

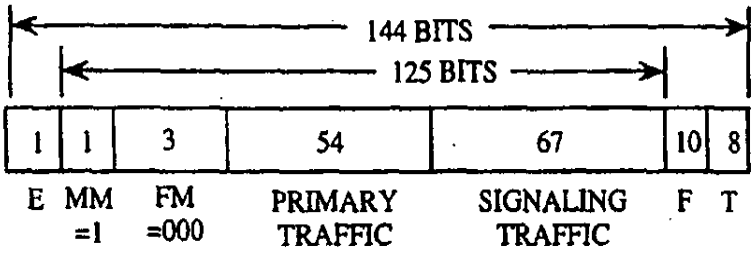

FIG. 9H

7200 BPS DIM AND BURST WITH RATE 1/8 PRIMARY AND SIGNALING TRAFFIC

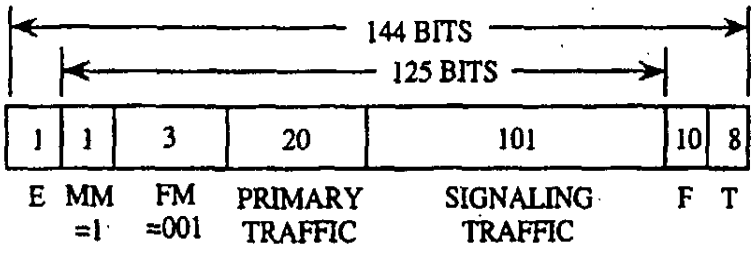

FIG. 9I

7200 BPS SIGNALING TRAFFIC ONLY

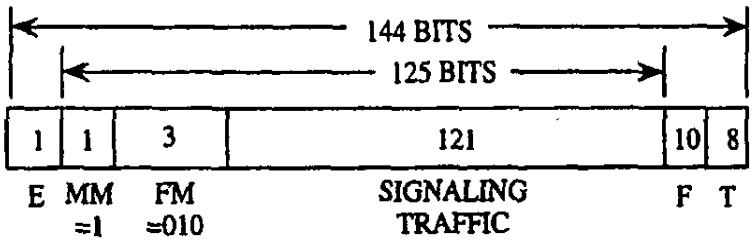

FIG. 9J

3600 BPS PRIMARY TRAFFIC ONLY

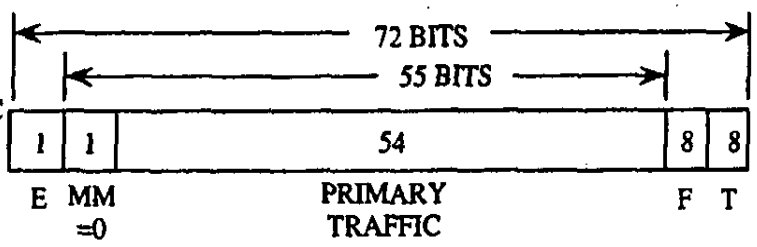

FIG. 9K

3600 BPS DIM AND BURST WITH RATE 1/8 PRIMARY AND SIGNALING TRAFFIC

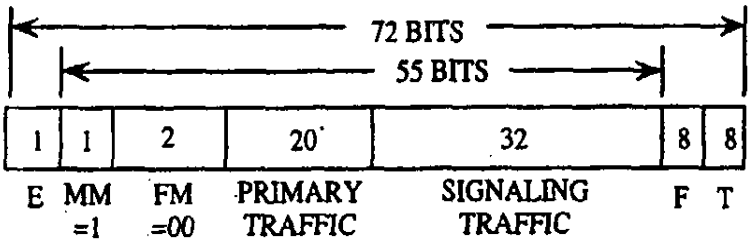

FIG. 9L

3600 BPS SIGNALING TRAFFIC ONLY

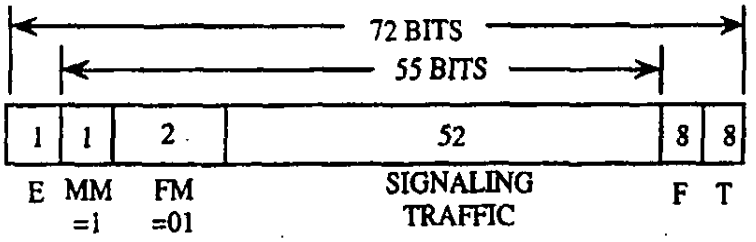

FIG. 9M

1800 BPS PRIMARY TRAFFIC ONLY

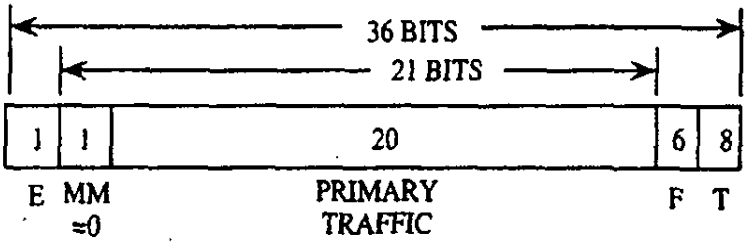

FIG. 9N

14400 BPS DIM AND BURST WITH RATE 1/2 PRIMARY AND SECONDARY TRAFFIC

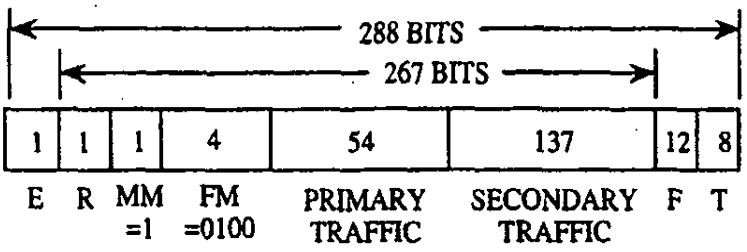

FIG. 9O

14400 BPS DIM AND BURST WITH RATE 1/4 PRIMARY AND SECONDARY TRAFFIC

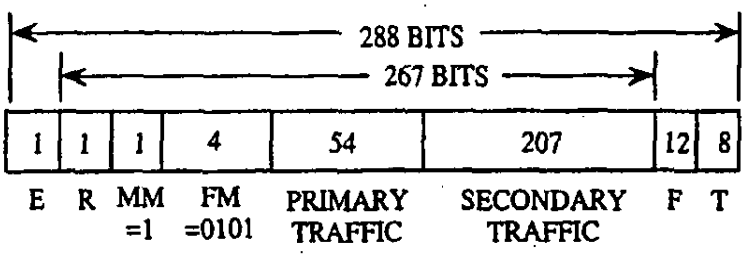

FIG. 9P

14400 BPS DIM AND BURST WITH RATE 1/8 PRIMARY AND SECONDARY TRAFFIC

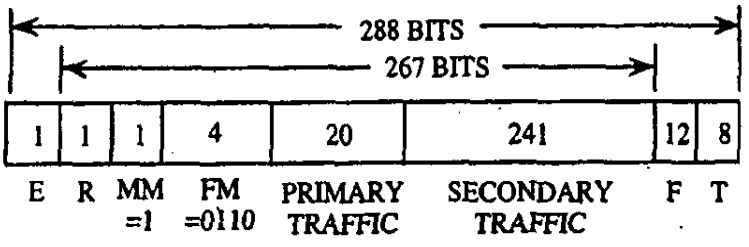

FIG. 9Q

14400 BPS BLANK AND BURST WITH SECONDARY TRAFFIC ONLY

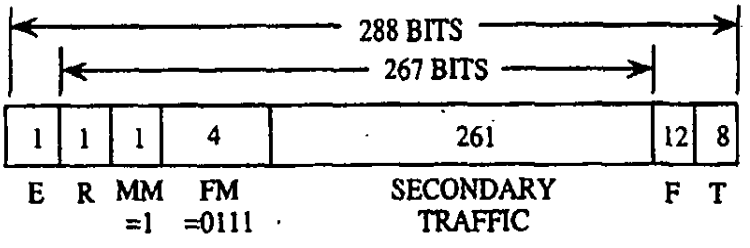

FIG. 9R

14400 BPS DIM AND BURST WITH RATE 1/8 PRIMARY, SECONDARY, AND SIGNALING TRAFFIC

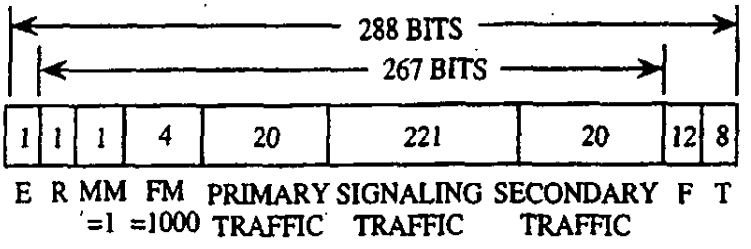

FIG. 9S

7200 BPS DIM AND BURST WITH RATE 1/4 PRIMARY AND SECONDARY TRAFFIC

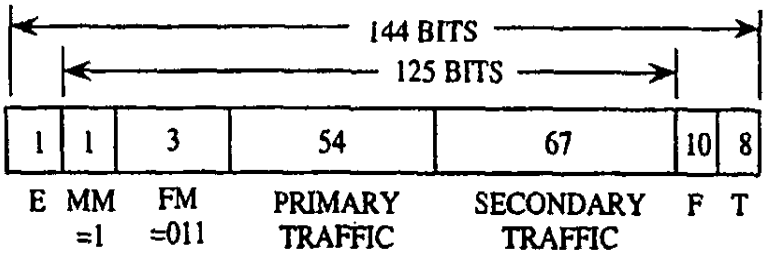

FIG. 9T

7200 BPS DIM AND BURST WITH RATE 1/8 PRIMARY AND SECONDARY TRAFFIC

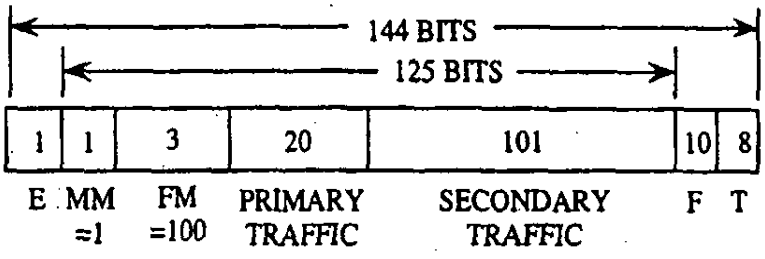

FIG. 9U

7200 BPS BLANK AND BURST WITH SECONDARY TRAFFIC ONLY

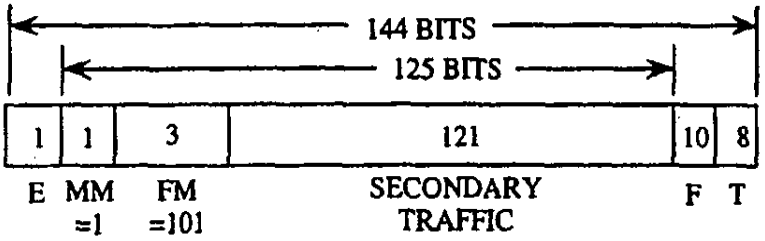

FIG. 9V

7200 BPS DIM AND BURST WITH RATE 1/8 PRIMARY, SECONDARY, AND SIGNALING TRAFFIC

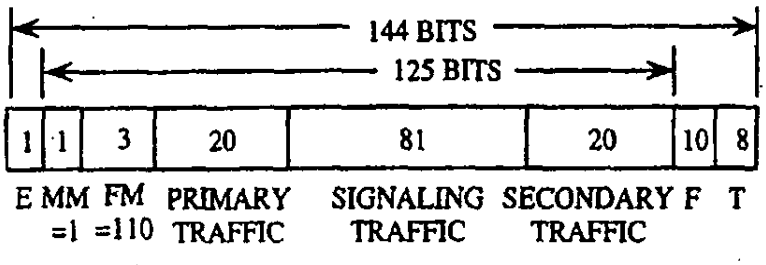

FIG. 9W

3600 BPS DIM AND BURST WITH RATE 1/8 PRIMARY AND SECONDARY TRAFFIC ONLY

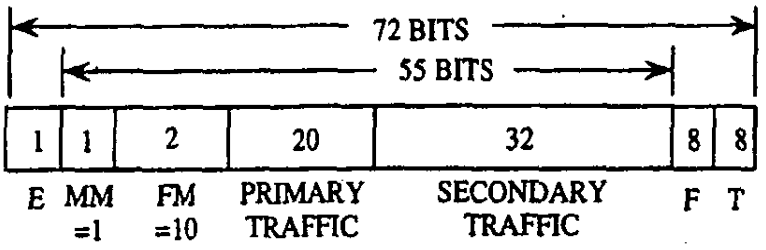

FIG. 9X

3600 BPS BLANK AND BURST WITH SECONDARY TRAFFIC ONLY

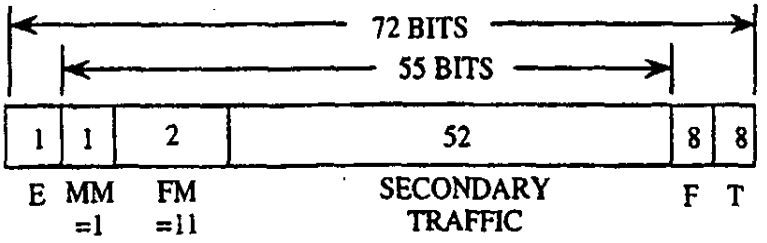

FIG. 9Y

1800 BPS BLANK AND BURST WITH SECONDARY TRAFFIC ONLY

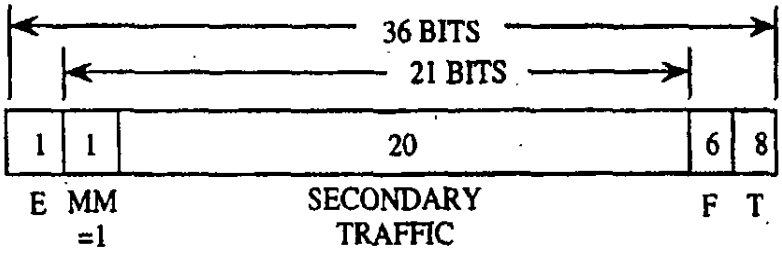

NOTATION

E	ERASURE INDICATOR BIT
R	RESERVED BIT
MM	MIXED MODE BIT
FM	FRAME MODE BITS
F	FRAME QUALITY INDICATOR (CRC) BITS
T	ENCODER TAIL BITS

METHOD AND APPARATUS FOR THE FORMATTING OF DATA FOR TRANSMISSION

BACKGROUND OF THE INVENTION

I. Field of the Invention

The present application is a continuation-in-part application of U.S. patent application Ser. No. 08/171,146, filed Dec. 21, 1993, entitled "METHOD AND APPARATUS FOR FORMATTING DATA FOR TRANSMISSION", now U.S. Pat. No. 5,504,773, which is a continuation of U.S. patent application Ser. No. 07/822,164, filed Jan. 16, 1992, now abandoned, which is a continuation-in-part of U.S. patent application Ser. No. 07/543,496, filed Jun. 25, 1990, entitled "SYSTEM AND METHOD FOR GENERATING SIGNAL WAVEFORMS IN A CDMA CELLULAR TELEPHONE SYSTEM", now U.S. Pat. No. 5,103,459, and as such relates to the organization of data for transmission. More particularly, the present invention relates to a novel and improved method and apparatus for formatting vocoder data, non-vocoder data and signaling data for transmission.

II. Description of the Related Art

In the field of digital communications various arrangements of digital data for transmission are used. The data bits are organized according to commonly used formats for transfer over the communication medium.

It is therefore an object of the present invention to provide a data format which facilitates the communication of various types of data, and data of various rates, to be communicated in a structured form.

SUMMARY OF THE INVENTION

The present invention is a novel and improved method and system for formatting digital data for communication over a transmission medium.

In communication systems it is important to utilize a data format which permits a full communication of data between users. In a communication system, such as a code division multiple access (CDMA) communication system, in which it is desirable to communicate various types of data, and at various rates, a data format must be selected which permits maximum flexibility within a predefined structure. Furthermore to maximize resources it is desirable to permit a sharing of the format to permit different types of data to be organized together. In such situations it is necessary to structure the data in a manner in which it may be readily extracted according to the corresponding type and rate.

In accordance with the present invention a method and apparatus is provided for arranging various types of data, and at various rates into a uniquely structured format for transmission. Data is provided as vocoder data or different types of non-vocoder data. The data is organized into frames of a predetermined time duration for transmission. The data frames are organized, depending on the data, to be at one of several data rates. Vocoder data is provided at one of several data rates and is organized in the frame according to a predetermined format. Frames may be formatted with a sharing of vocoder data with non-vocoder data to be at a highest frame data rate. Non-vocoder data may be organized so as to also be at a highest frame rate. Additional control data may be provided within the data frames to support various aspects of the transmission and recovery upon reception.

BRIEF DESCRIPTION OF THE DRAWINGS

The features, objects, and advantages of the present invention will become more apparent from the detailed description set forth below when taken in conjunction with the drawings in which like reference characters identify correspondingly throughout and wherein:

FIG. 1 is a block diagram illustrating an exemplary embodiment for a transmitter portion of a transceiver;

FIGS. 2a–2l are a series of diagrams illustrating frame data formats for the various data rates, types and modes of rate set 1;

FIG. 3 is a diagram illustrating an exemplary circuit implementation of the CRC and Tail Bit generator of FIG. 1;

FIGS. 4a–4c is a flow chart of the formatting of flames of data;

FIGS. 5a–5d illustrate in a series of charts the ordering of code symbols in the interleaver array for transmission data rates of 9.6, 4.8, 2.4 and 1.2 kbps, respectively;

FIGS. 6a–6c is a chart illustrating the Walsh symbol corresponding to each encoder symbol group;

FIG. 7 is a block diagram illustrating the long code generator of FIG. 1;

FIGS. 8a–8c are a series of diagrams illustrating long code masks for the various channel type; and

FIGS. 9a–9y are a series of diagrams illustrating frame data formats for the various data rates, types and modes of rate set 2.

DETAILED DESCRIPTION OF THE PREFERRED EMBODIMENTS

Referring now to the drawings, FIG. 1 illustrates an exemplary embodiment of a transmit portion 10 of a CDMA mobile station transceiver or PCN handset. In a CDMA cellular communication system a forward CDMA channel is used to transmit information from a cell base station to the mobile station. Conversely a reverse CDMA channel is used to transmit information from the mobile station to the cell base station. The communication of signals from the mobile station may be characterized in the form of an access channel or a traffic channel communication. The access channel is used for short signaling messages such as call originations, responses to pages, and registrations. The traffic channel is used to communicate (1) primary traffic, typically includes user speech, or (2) secondary traffic, typically user data, or (3) signaling traffic, such as command and control signals, or (4) a combination of primary traffic and secondary traffic or (5) a combination of primary traffic and signaling traffic.

Transmit portion 10 enables data to be transmitted on the reverse CDMA channel at data rates of 9.6 kbps, 4.8 kbps, 2.4 kbps or 1.2 kbps. Transmissions on the reverse traffic channel may be at any of these data rates while transmissions on the access channel are at the 4.8 kbps data rate. The transmission duty cycle on the reverse traffic channel will vary with the transmission data rate. Specifically, the transmission duty cycle for each rate is provided in Table I. As the duty cycle for transmission varies proportionately with the data rate, the actual burst transmission rate is fixed at 28,800 code symbols per second. Since six code symbols are modulated as one of 64 Walsh symbols for transmission, the Walsh symbol transmission rate shall be fixed at 4800 Walsh symbols per second which results in a fixed Walsh chip rate of 307.2 kcps.

All data that is transmitted on the reverse CDMA channel is convolutional encoded, block interleaved, modulated by 64-ary modulation, and direct-sequence PN spread prior to transmission. Table I further defines the relationships and rates for data and symbols for the various transmission rates on the reverse traffic channel. The numerology is identical for the access channel except that the transmission rate is fixed at 4.8 kbps, and the duty cycle is 100%. As described later herein each bit transmitted on the reverse CDMA channel is convolutional encoded using a rate ⅓ code. Therefore, the code symbol rate is always three times the data rate. The rate of the direct-sequence spreading functions shall be fixed at 1.2288 MHz, so that each Walsh chip is spread by precisely four PN chips.

TABLE I

Bit Rate (kbps)	9.6	4.8	2.4	1.2
PN Chip Rate (Mcps)	1.2288	1.2288	1.2288	1.2288
Code Rate (bits/code symbol)	1/3	1/3	1/3	1/3
TX Duty Cycle (%)	100.0	50.0	25.0	12.5
Code Symbol Rate (sps)	28,800	28,800	28,800	28,800
Modulation (code symbol/ Walsh symbol)	6	6	6	6
Walsh Symbol Rate (sps)	4800	4800	4800	4800
Walsh Chip; Rate (kcps)	307.20	307.20	307.20	307.20
Walsh Symbol (μs)	208.33	208.33	208.33	208.33
PN Chips/ Code Symbol	42.67	42.67	42.67	42.67
PN Chips/ Walsh Symbol	256	256	256	256
PN Chips/ Walsh Chip	4	4	4	4

Transmit portion **10**, when functioning in mode in which primary traffic is present, communicates acoustical signals, such as speech and/or background noise, as digital signals over the transmission medium. To facilitate the digital communication of acoustical signals, these signals are sampled and digitized by well known techniques. For example, in FIG. 1, sound is converted by microphone **12** to an analog signal which is then converted to a digital signal by codec **14**. Codec **14** typically performs an analog to digital conversion process using a standard 8 bit/μlaw format. In the alternative, the analog signal may be directly converted to digital form in a uniform pulse code modulation (PCM) format. In an exemplary embodiment codec **14** uses an 8 kHz sampling and provides an output of 8 bit samples at the sampling rate so as to realize a 64 kbps data rate.

The 8-bit samples are output from codec **14** to vocoder **16** where a μlaw/uniform code conversion process is performed. In vocoder **16**, the samples are organized into frames of input data wherein each frame is comprised of a predetermined number of samples. In a preferred implementation of vocoder **16** each frame is comprised of 160 samples or of 20 msec. of speech at the 8 kHz sampling rate. It should be understood that other sampling rates and frame sizes may be used. Each frame of speech samples is variable rate encoded by vocoder **16** with the resultant parameter data formatted into a corresponding data packet. The vocoder data packets are then output to microprocessor **18** and associated circuitry for transmission formatting. Microprocessor **18** generically includes program instructions contained with a program instruction memory, a data memory, and appropriate interface and related circuitry as is known in the art.

A preferred implementation of vocoder **16** utilizes a form of the Code Excited Linear Predictive (CELP) coding techniques so as to provide a variable rate in coded speech data. A Linear Predictive Coder (LPC) analysis is performed upon a constant number of samples, and the pitch and codebook searches are performed on varying numbers of samples depending upon the transmission rate. A variable rate vocoder of this type is described in further detail in copending U.S. patent application Ser. No. 08/004,484, filed Jan. 14, 1993, which is a continuation of U.S. patent application Ser. No. 07/713,661 filed Jun. 11, 1991, now abandoned, and assigned to the Assignee of the present invention and of which the disclosure is incorporated by reference. Vocoder **16** may be implemented in an application specific integrated circuit (ASIC) or in a digital signal processor.

In the variable rate vocoder just mentioned, the speech analysis frames are 20 msec. in length, implying that the extracted parameters are output to microprocessor **18** in a burst 50 times per second. Furthermore the rate of data output is varied from roughly 8 kbps to 4 kbps to 2 kbps, and to 1 kbps.

At full rate, also referred to as rate 1, data transmission between the vocoder and the microprocessor is at an 8.55 kbps rate. For the full rate data the parameters are encoded for each frame and represented by 160 bits. The full rate data frame also includes a parity check of 11 bits thus resulting in a full rate frame being comprised of a total of 171 bits. In the full rate data frame, the transmission rate between the vocoder and the microprocessor absent the parity check bits would be 8 kbps.

At half rate, also referred to as rate ½, data transmission between the vocoder and the microprocessor is at a 4 kbps rate with the parameters encoded for each frame using 80 bits. At quarter rate, also referred to as rate ¼, data transmission between the vocoder and the microprocessor is at a 2 kbps rate with the parameters encoded for each frame using 40 bits. At eighth rate, also referred to as rate ⅛, data transmission between the vocoder and the microprocessor is slightly less than a 1 kbps rate with the parameters encoded for each frame using 16 bits.

In addition, no information may be sent in a frame between the vocoder and the microprocessor. This frame type, referred to as a blank frame, may be used for signaling or other non-vocoder data.

The vocoder data packets are then output to microprocessor **18** and CRC and Tail Bit generator **20** for completing the transmission formatting. Microprocessor **18** receives packets of parameter data every 20 msec. along with a rate indication for the rate the frame of speech samples was encoded. Microprocessor **18** also receives, if present, an input of secondary traffic data for output to generator **20**. Microprocessor **18** also internally generates signaling data for output to generator **20**. Data, whether it is primary traffic, secondary traffic or signaling traffic matter, if present, is output from microprocessor **18** to generator **20** every 20 msec. frame.

Generator **20** generates and appends at the end of all full and half rate frames a set of parity check bits, frame quality

indicator bits or cyclic redundancy check (CRC) bits which are used at the receiver as a frame quality indicator. For a full rate frame, regardless of whether the data is a full rate primary, secondary or signaling-traffic, or a combination of half rate primary and secondary traffic, or a combination of half rate primary and signaling traffic, generator 20 preferably generates a set of frame quality indicator bits according to a first polynomial. For a half rate data frame, generator 20 also generates a set of frame quality indicator bits preferably according to a second polynomial. Generator 20 further generates for all frame rates a set of encoder tail bits which follow the frame quality indicator bits, if present, or data if frame quality indicator bits are not present, at the end of the frame. Further details of the operation on microprocessor 18 and generator 20 are provided later herein with reference to FIGS. 3 and 4.

Reverse traffic channel frames provided from generator 20 at the 9.6 kbps rate are 192 bits in length and span the 20 msec. frame. These frames consist of a single mixed mode bit, auxiliary format bits if present, message bits, a 12-bit frame quality indicator, and 8 tail bits as shown in FIGS. 2a–2e and 2i–2l. The mixed mode bit shall be set to '0' during any frame in which the message bits are primary traffic information only. When the mixed mode bit is '0', the frame shall consist of the mixed mode bit, 171 primary traffic bits, 12 frame quality indicator bits, and 8 tail bits.

The mixed mode bit is set to '1' for frames containing secondary or signaling traffic. If the the mixed mode bit is set to '1' the frame is of a "blank-and-burst" or a "dim-and-burst" format. A "blank-and-burst" operation is one in which the entire frame is used for secondary or signaling traffic while a "dim-and-burst" operation is one in which the primary traffic shares the frame with either secondary or signaling traffic.

The first bit following the mixed mode bit is a traffic type bit. The traffic type bit is used to specify whether the frame contains secondary or signaling traffic. If the traffic type bit is a '0', the frame contains signaling traffic, and if a '1', the frame contains secondary traffic. FIGS. 2b–2e and 2i–2l illustrate the traffic type bit. The two bits following the traffic type bit are traffic mode bits. The two traffic mode bits specify the combination of data within the frame.

In the preferred implementation only primary traffic is transmitted in frames at the 4.8 kbps, 2.4 kbps, and 1.2 kbps rates. Mixed mode operation is generally not to be supported at rates other than the 9.6 kbps rate, although it may be readily configured to do so. The frame formats for these particular rates are shown in FIGS. 2f–2h. For the 4.8 kbps rate, the frame is 96 bits in length with the bits spaced over the 20 msec. time period of the frame as described later herein. The 4.8 kbps rate frame contains 80 primary traffic bits, an 8 frame quality indicator bits, and 8 tail bits. For the 2.4 kbps rate, the frame is 48 bits in length with the bits spaced over the 20 msec. time period of the frame as also described later herein. The 2.4 kbps rate frame contains 40 primary traffic bits and 8 tail bits. For the 1.2 kbps rate, the frame is 24 bits in length with the bits spaced over the 20 msec. time period of the frame as also described later herein. The 1.2 kbps rate frame contains 16 primary traffic bits and 8 tail bits.

In a preferred embodiment the access channel data is generated by microprocessor 18 for transmission at a rate of 4.8 kbps. As such the data is prepared in a manner identical to that of 4.8 kbps frame format data, such as encoding, interleaving as Walsh encoding. In the encoding scheme implemented for the 4.8 kbps data, whether reverse traffic channel data or access channel data, redundant data is generated. Unlike the reverse traffic channel where the redundant data is eliminated in the transmission, in access channel all data including redundant data is transmitted. Details on the transmission aspects of frames of access channel data are provided later herein.

FIGS. 2a–2l illustrate the frame formats of frames output by generator 20 for frames of rates 9.6 kbps, 4.8 kbps, 2.4 kbps and 1.2 kbps. FIG. 2a illustrates a 9.6 kbps frame for the transmission of primary traffic only. The frame consists of one mixed mode bit, which is set to 0 to indicate that the frame contains only primary traffic data, 171 bits of primary traffic data, 12 frame quality indicator bits and 8 tail bits.

FIG. 2b illustrate a 9.6 kbps dim and burst frame for the transmission of rate ½ primary traffic and signaling traffic. The frame consists of one mixed mode bit, which is set to 1 to indicate the frame does not contain primary traffic only, one traffic type bit set to zero to indicate signaling data is in the frame, two traffic mode bits set to 00 to indicate that the frame contains rate ½ primary traffic and signaling traffic, 80 primary traffic bits, 88 signaling-traffic bits, 12 frame quality indicator bits and 8 tail bits.

FIG. 2c illustrate a 9.6 kbps dim and burst frame for the transmission of rate ¼ primary traffic and signaling traffic. The frame consists of one mixed mode bit, which is set to 1 to indicate the frame does not contain primary traffic only, one traffic type bit set to zero to indicate signaling data is in the frame, two traffic mode bits set to 01 to indicate that the frame contains rate ¼ primary traffic and signaling traffic, 40 primary traffic bits, 128 signaling traffic bits, 12 frame quality indicator bits and 8 tail bits.

FIG. 2d illustrate a 9.6 kbps dim and burst frame for the transmission of rate ⅛ primary traffic and signaling traffic. The frame consists of one mixed mode bit, which is set to 1 to indicate the frame does not contain primary traffic only, one traffic type bit set to zero to indicate signaling data is in the frame, two traffic mode bits set to 10 to indicate that the frame contains rate ⅛ primary traffic and signaling traffic, 16 primary traffic bits, 152 signaling traffic bits, 12 frame quality indicator bits and 8 tail bits.

FIG. 2e illustrate a 9.6 kbps blank and burst frame for the transmission of signaling traffic. The frame consists of one mixed mode bit, which is set to 1 to indicate the frame does not contain primary traffic only, one traffic type bit set to zero to indicate signaling data is in the frame, two traffic mode bits set to 11 to indicate that the frame contains signaling traffic only, 168 signaling traffic bits, 12 frame quality indicator bits and 8 tail bits.

FIG. 2f illustrates a 4.8 kbps frame for the transmission of rate ½ primary traffic only. The frame contains 80 primary traffic bits, 8 frame quality indicator bits and 8 tail bits. FIG. 2g illustrates a 2.4 kbps frame for the transmission of rate ¼ primary traffic only. The frame contains 40 primary traffic bits and 8 tail bits. FIG. 2h illustrates a 1.2 kbps frame for the transmission of rate ¼ primary traffic only. The frame contains 16 primary traffic bits and 8 tail bits.

FIG. 2i illustrate a 9.6 kbps dim and burst frame for the transmission of rate ½ primary traffic and secondary traffic. The frame consists of one mixed mode bit, which is set to 1 to indicate the frame does not contain primary traffic only, one traffic type bit set to 1 to indicate secondary data is in the frame, two traffic mode bits set to 00 to indicate that the frame contains rate ½ primary traffic and secondary traffic, 80 primary traffic bits, 88 secondary traffic bits, 12 frame quality indicator bits and 8 tail bits.

FIG. 2j illustrate a 9.6 kbps dim and burst frame for the transmission of rate ¼ primary traffic and secondary traffic.

The frame consists of one mixed mode bit, which is set to 1 to indicate the frame does not contain primary traffic only, one traffic type bit set to 1 to indicate secondary data is in the frame, two traffic mode bits set to 01 to indicate that the frame contains rate ¼ primary traffic and secondary traffic, 40 primary traffic bits, 128 secondary traffic bits, 12 frame quality indicator bits and 8 tail bits.

FIG. 2*k* illustrate a 9.6 kbps dim and burst frame for the transmission of rate ⅛ primary traffic and secondary traffic. The frame consists of one mixed mode bit, which is set to 1 to indicate the frame does not contain primary traffic only, one traffic type bit set to 1 to indicate secondary data is in the frame, two traffic mode bits set to 10 to indicate that the frame contains rate ⅛ primary traffic and secondary traffic, 16 primary traffic bits, 152 secondary traffic bits, 12 frame quality indicator bits and 8 tail bits.

FIG. 2*l* illustrate a 9.6 kbps blank and burst frame for the transmission of secondary traffic. The frame consists of one mixed mode bit, which is set to 1 to indicate the frame does not contain primary traffic only, one traffic type bit set to 1 to indicate secondary data is in the frame, two traffic mode bits set to 11 to indicate that the frame contains secondary traffic only, 168 secondary traffic bits, 12 frame quality indicator bits and 8 tail bits.

FIG. 3 illustrates an exemplary implementation of the elements for formatting the data in accordance with FIGS. 2*a*–2*l*. In FIG. 3 data is transmitted from microprocessor **18** (FIG. 1) to generator **20**. Generator **20** is comprised of data buffer and control logic **60**, CRC circuits **62** and **64**, and tail bit circuit **66**. Along with data provided from the microprocessor a rate command may optionally be provided. Data is transferred for each 20 msec frame from the microprocessor to logic **60** where temporarily stored. For each frame, logic **60** may for each frame count the number of bits transmitted from the microprocessor, or in the alternative use the rate command and a count of the clock cycles in formatting a frame of data.

Each frame of the traffic channel includes a frame quality indicator. For the 9.6 kbps and 4.8 kbps transmission rates, the frame quality indicator is the CRC. For the 2.4 kbps and 1.2 kbps transmission rates, the frame quality indicator is implied, in that no extra frame quality bits are transmitted. The frame quality indicator supports two functions at the receiver. The first function is to determine the transmission rate of the frame, while the second function is to determine whether the frame is in error. At the receiver these determinations are made by a combination of the decoder information and the CRC checks.

For the 9.6 kbps and 4.8 kbps rates, the frame quality indicator (CRC) is calculated on all bits within the frame, except the frame quality indicator (CRC) itself and the tail bits. Logic **60** provides the 9.6 kbps and 4.8 kbps rate data respectively to CRC circuits **62** and **64**. Circuits **62** and **64** are typically constructed as a sequence of shift registers, modulo-2 adders (typically exclusive-OR gates) and switches as illustrated.

The 9.6 kbps transmission rate data uses a 12-bit frame quality indicator (CRC), which is be transmitted within the 192-bit long frame as discussed with reference to FIGS. 2*a*–2*e* and 2*i*–2*l*. As illustrated in FIG. 3 for CRC circuit **62**, the generator polynomial for the 9.6 kbps rate is as follows:

$$g(x)=x^{12}+x^{11}+x^{10}+x^{9}+x^{8}+x^{4}+x+1. \quad (1)$$

The 4.8 kbps transmission rate data uses an 8-bit CRC, which is transmitted within the 96-bit long frame. As illustrated in FIG. 3 for CRC circuit **64**, the generator polynomial for the 4.8 kbps rate is as follows:

$$g(x)=x^{8}+x^{7}+x^{4}+x^{3}+x+1. \quad (2)$$

Initially, all shift register elements of circuits **62** and **64** are set to logical one ('1') by an initialization signal from logic **60**. Furthermore logic **60** set the switches of circuits **62** and **64** in the up position.

For 9.6 kbps rate data, the registers of circuit **62** are then clocked 172 times for the 172 bits in the sequence of primary traffic, secondary traffic or signaling bits or a mixture thereof along with the corresponding mode/format indicator bits as input to circuit **62**. After 172 bits are clocked through circuit **62**, logic **60** then sets the switches of circuit **62** in the down position with the registers of circuit **62** then being clocked an additional 12 times. As a result of the 12 additional clockings of circuit **62**, 12 additional output bits are generated which are the frame quality indicator bits (CRC bits). The frame quality indicator bits, in the order calculated, are appended to the end of the 172 bits as output from circuit **62**. It should be noted that the 172 bits output from logic **60** which pass through circuit **62** are undisturbed by the computation of the CRC bits and are thus output from circuit **62** in the same order and at the same value at which they entered.

For 9.6 kbps rate data bits are input to circuit **64** from logic **60** in the following order. For the case of primary traffic only, the bits are input to circuit **64** from logic **60** in the order of the single mixed mode (MM) bit followed by the 171 primary traffic bits. For the case of "dim and burst" with primary and signaling traffic, the bits are input to circuit **64** from logic **60** in the order of the single MM bit, a traffic type (TT) bit, a pair of traffic mode (TM) bits, 80 primary traffic bits, and 86 signaling traffic bits. For the case of "dim and burst" with primary and secondary traffic, the bits are input to circuit **64** from logic **60** in the order of the single MM bit, the TT bit, the pair of TM bits, 80 primary traffic bits and 87 signaling traffic bits. For the case of "blank and burst" data format with signaling traffic only, the bits are input to circuit **64** from logic **60** in the order of the single MM bit, the TT bit and 168 signaling traffic bits. For the case of "blank and burst" data format with secondary traffic only, the bits are input to circuit **64** from logic **60** in the order of the single MM bit, the TT bit and 169 signaling traffic bits.

Similarly for 4.8 kbps rate data, the registers of circuit **64** are clocked 80 times for the 80 bits of primary traffic data, or for the 80 bits of access channel data, as input to circuit **64** from logic **60**. After the 80 bits are clocked through circuit **64**, logic **60** then sets the switches of circuit **64** in the down position with the registers of circuit **64** then being clocked an additional 8 times. As a result of the 12 additional clockings of circuit **62**, 12 additional output bits are generated which are the CRC bits. The CRC bits, in the order calculated, are again appended to the end of the 80 bits as output from circuit **64**. It should again be noted that the 80 bits output from logic 60 which pass through circuit **64** are undisturbed by the computation of the CRC bits and are thus output from circuit **64** in the same order and at the same value at which they entered.

The bits output from either of circuits **62** and **64** are provided to switch **66** which is under the control of logic **60**. Also input to switch **66** are the 40 and 16 bits of primary traffic data output from logic **60** for 2.4 kbps and 1.2 kbps data frames. Switch **66** selects between providing an output of the input data (up position) and tail bits at a logical zero ('0') value (down position). Switch **66** is normally set in the up position to permit data from logic **60**, and from circuits **62** and **64** if present, to be output from generator **20** to encoder **22** (FIG. 1). For the 9.6 kbps and 4.8 kbps frame data, after the CRC bits are clocked through switch **66**, logic

60 sets the switch to the down position for 8 clock cycles so as to generate 8 all zero tail bits. Thus for 9.6 kbps and 4.8 kbps data frames, the data as output to the encoder for the frame includes appended after the CRC bits, the 8 tail bits. Similarly for the 2.4 kbps and 1.2 kbps frame data, after the primary traffic bits are clocked from logic 60 through switch 66, logic 60 sets the switch to the down position for 8 clock cycles so as to again generate 8 all zero tail bits. Thus for 2.4 kbps and 1.2 kbps data frames, the data as output to the encoder for the frame includes appended after the primary traffic bits, the 8 tail bits.

FIGS. 4*a*–4*c* illustrate in a series of flow charts the operation of microprocessor **18**, and generator **20** in assembling the data into the disclosed frame format. It should be noted that various schemes may be implemented for giving the various traffic types and rates priority for transmission. In an exemplary implementation, when a signaling traffic message is to be sent when there is vocoder data present a "dim and burst" format may be selected. Microprocessor **18** may generate a command to vocoder **18** for the vocoder to encode speech sample frames at the half rate, regardless of the rate at which the vocoder would normally encode the sample frame. Microprocessor **18** then assembles the half rate vocoder data with the signaling traffic into the 9.6 kbps frame. In this case, a limit may be place on the number of speech frames encoded at the half rate to avoid degradation in the speech quality. In the alternative, microprocessor **18** may wait until a half rate frame of vocoder data is received before assembling the data into the "dim and burst" format. In this case, in order to ensure timely transmission of the signaling data, a maximum limit on the number of consecutive frames at other than half rate may be imposed before a command is sent to the vocoder to encode at half rate. Secondary traffic may be transferred in the "dim and burst" format (FIG. 2*b*–2*d* and FIGS. 2*i*–2*k*) in a similar manner.

Similar is the case for the "blank and burst" data formats as illustrated in FIGS. 2*e* and 2*l*. The vocoder may be commanded to not encode the frame of speech samples or the vocoder data is ignored by the microprocessor in constructing the data frame. Prioritizing between generating frame formats of primary traffic of various rate, "dim and burst" traffic, and "blank and burst" traffic is open to many possibilities.

Referring back to FIG. 1, 20 msec. frames of 9.6 kbps, 4.8 kbps, 2.4 kbps and 1.2 kbps data are thus output from generator **20** to encoder **22**. In the exemplary embodiment encoder **22** is a preferably a convolutional encoder, a type of encoder well known in the art. Encoder **22** preferably encodes the data using a rate ½, constraint length k=9 convolutional code. As an example encoder **22** is constructed with generator functions of g_0=557 (octal), g_1=663 (octal) and g_2=711 (octal). As is well known in the art, convolutional encoding involves the modulo-2 addition of selected taps of a serially time-shifted delayed data sequence. The length of the data sequence delay is equal to k−1, where k is the code constraint length. Since in the preferred embodiment a rate ⅓ code is used, three code symbols, the code symbols (c_0), (c_1) and (c_2), are generated for each data bit input to the encoder. The code symbols (c_0), (c_1) and (c_2) are respectively generated by the generator functions g_0, g_1 and g_2. The code symbols are output from encoder **22** to block interleaver **24**. The output code symbols are provided to interleaver **24** in the order of the code symbol (c_0) being first, the code symbol (c_1) being second and the code symbol (c_2) being last. The state of the encoder **22**, upon initialization, is the all-zero state. Furthermore the use of tail bits at the end of each frame provides a resetting of encoder **22** to an all-zero state.

The symbols output from encoder **22** are provided to block interleaver **24** which under the control of microprocessor **18** provides a code symbol repetition. Using a conventional random access memory (RAM) with the symbols stored therein as addressed by microprocessor **18**, code symbols may be stored in a manner to achieve a code symbol repetition rate that varies with the data channel.

Code symbols are not repeated for the 9.6 kbps data rate. Each code symbol at the 4.8 kbps data rate is repeated 1 time, i.e. each symbol occurs 2 times. Each code symbol at the 2.4 kbps data rate is repeated 3 times, i.e. each symbol occurs 4 times. Each code symbol at the 1.2 kbps data rate is repeated 7 times, i.e. each symbol occurs 8 times. For all data rates (9.6, 4.8, 2.4 and 1.2 kbps), the code repetition results in a constant code symbol rate of 28,800 code symbols per second for the data as output from interleaver **24**. On the reverse traffic channel the repeated code symbols are not transmitted multiple times with all but one of the code symbol repetitions deleted prior to actual transmission due to the variable transmission duty cycle as discussed in further detail below. It should be understood that the use of code symbol repetition as an expedient method for describing the operation of the interleaver and a data burst randomizer as discussed again in further detail below. It should be further understood that implementations other than those that use code symbol repetition may be readily devised that achieve the same result and remain within the teaching of the present invention.

All code symbols to be transmitted on the reverse traffic channel and the access channel are interleaved prior to modulation and transmission. Block interleaver **24**, constructed as is well known in the art, provides an output of the code symbols over a time period spanning 20 msec. The interleaver structure is typically a rectangular array with 32 rows and 18 columns, i.e. 576 cells. Code symbols are written into the interleaver by columns, with repetition for data at the 9.6, 4.8, 2.4 and 1.2 kbps rate, so as to completely fill the 32×18 matrix. FIGS. 5*a*–5*d* illustrate the ordering of write operations of repeated code symbols into the interleaver array for transmission data rates of 9.6, 4.8, 2.4 and 1.2 kbps, respectively.

Reverse traffic channel code symbols are output from the interleaver by rows. Microprocessor **18** also controls the addressing of the interleaver memory for outputting the symbols in the appropriate order. The interleaver rows are preferably output in the following order:

At 9.6 kbps:

1 2 3 4 5 6 7 8 9 10 11 12 13 14 15 16 17 18 19 20 21 22 23 24 25 26 27 28 29 30 31 32

At 4.8 kbps:

1 3 2 4 5 7 6 8 9 11 10 12 13 15 14 16 17 19 18 20 21 23 22 24 25 27 26 28 29 31 30 32

At 2.4 kbps:

1 5 2 6 3 7 4 8 9 13 10 14 11 15 12 16 17 21 18 22 19 23 20 24 25 29 26 30 27 31 28 32

At 1.2 kbps:

1 9 2 10 3 11 4 12 5 13 6 14 7 15 8 16 17 25 18 26 19 27 20 28 21 29 22 30 23 31 24 32.

Access channel code symbols are also output from interleaver **24** by rows. Microprocessor **18** again controls the addressing of the interleaver memory for outputting the symbols in the appropriate order. The interleaver rows are output in the following order at the 4.8 kbps rate for the access channel code symbols:

1 17 9 25 5 21 13 29 3 19 11 27 7 23 15 31 2 18 10 26 6 22 14 30 4 20 12 28 8 24 16 32.

It should be noted that other encoding rates, such as a rate ½ convolutional code used on the forward transmission channel, along with various other symbol interleaving formats may be readily devised using the basic teaching of the present invention.

Referring again to FIG. 1, the interleaved code symbols are output from interleaver **24** to modulator **26**. In the preferred embodiment modulation for the Reverse CDMA Channel uses 64-ary orthogonal signaling. That is, one of 64 possible modulation symbols is transmitted for each six code symbols. The 64-ary modulation symbol is one of 64 orthogonal waveforms generated preferably using Walsh functions. These modulation symbols are given in FIGS. **6***a*–**6***c* and are numbered **0** through **63**. The modulation symbols are selected according to the following formula:

$$\text{Modulation symbol number}=c_0+2c_1+4c_2+8c_3+16c_4+32c_5 \quad (3)$$

where c_5 shall represent the last or most recent and co the first or oldest binary valued ('0' and '1') code symbol of each group of six code symbols that form a modulation symbol. The period of time required to transmit a single modulation symbol is referred to as a "Walsh symbol" interval and is approximately equal to 208.333 μs. The period of time associated with one-sixty-fourth of the modulation symbol is referred to as a "Walsh chip" and is approximately equal to 3.2552083333 . . . μs.

Each modulation or Walsh symbol is output from modulator **26** to one input of a modulo-2 adder, exclusive-OR gate **28**. The Walsh symbols are output from modulator at a 4800 sps rate which corresponds to a Walsh chip rate of 307.2 kcps. The other input to gate **28** is provided from long code generator **30** which generates a masked pseudonoise (PN) code, referred to as the long code sequence, in cooperation with mask circuit **32**. The long code sequence provided from generator **30** is at a chip rate four times the Walsh chip rate of modulator **26**, i.e. a PN chip rate 1.2288 Mcps. Gate **28** combines the two input signals to provide an output of data at the chip rate of 1.2288 Mcps.

The long code sequence is a time shift of a sequence of length 2^{42}-1 chips and is generated by a linear generator well known in the art using the following polynomial:

$$p(x)=x^{42}+x^{35}+x^{33}+x^{31}+x^{27}+x^{26}+x^{25}+x^{22}+x^{21}+x^{19}+x^{18}+x^{17}+x^{16}+x^{10}+x^7+x^6+x^5+x^3+x^2+x^1+1 \quad (4)$$

FIG. 7 illustrates generator **30** in further detail. Generator **30** is comprised of a sequence generator section **70** and a masking section **72**. Section **70** is comprised of a sequence of shift registers and modulo-2 adders (typically exclusive-OR gates) coupled together to generate a 42-bit code according to equation 4. The long code is then generated by masking the 42-bit state variables output from section **70** with a 42-bit wide mask provided from mask circuit **32**.

Section **72** is comprised of a series of input AND gates 74_1–74_{42} having one input for receiving a respective mask bit of the 42-bit wide mask. The other input of each of AND gates 74_1–74_{42} receives the output from a corresponding shift register in section **70**. The output of AND gates 74_1–74_{42} are modulo-2 added by adder **76** to form a single bit output for each 1.2288 MHz clocking of the shift registers of section **70**. Adder **76** is typically constructed as a cascaded arrangement of exclusive-OR gates as is well known in the art. Therefore, the actual output PN sequence is generated by the modulo-2 addition of all 42 masked output bits of sequence generator **70** as shown in FIG. 7.

The mask used for the PN spreading shall vary depending on the channel type on which the mobile station is communicating. Referring to FIG. 1, an initialization information is provided from microprocessor **18** to generator **30** and circuit **32**. Generator **30** is responsive to the initialization information for initialization of the circuitry. Mask **32** is also responsive to the initialization information, which indicates the mask type to be provided, to output a 42-bit mask. As such, mask circuit **32** may be configured as a memory which contains a mask for each communication channel type. FIGS. **8***a*–**8***c* provide an exemplary definition of the masking bits for each channel type.

Specifically, when communicating on the Access Channel, the mask is defined as illustrated in FIG. **8***a*. In the Access Channel mask, mask bits M_{24} through M_{41} are set to '1'; mask bits M_{19} through M_{23} are set to the chosen Access Channel number; mask bits M_{16} through M_{18} are set to the code channel for the associated Paging Channel, i.e. the range typically being 1 through 7; mask bits M_9 through M_{15} are set to the registration zone; for the current base station; and mask bits M_0 through M_8 are set to the pilot PN value for the current CDMA Channel.

When communicating on the Reverse Traffic Channel, the mask is defined as illustrated in FIG. **8***b*. The mobile station uses one of two long codes unique to that mobile station: a public long code unique to the mobile station's electronic serial number (ESN); and a private long code unique for each mobile identification number (MIN) which is typically the telephone number of the mobile station. In the public long code the mask bits M_{32} through M_{41} are set to '0,' and the mask bits M_0 through M_{31} are set to the mobile station ESN value.

It is further envisioned that a private long code may be implemented as illustrated in FIG. **8***c*. The private long code will provide additional security in that it will only be known to the base station and the mobile station. The private long code will not be transmitted in the clear over the transmission medium. In the private long code the mask bit M_{40} through M_{41} are set to '0' and '1' respectively; while mask bits M_0 through M_{39} may be set to according to a predetermined assignment scheme.

Referring back to FIG. 1 the output of gate **28** is respectively provided as one input to each one of a pair of modulo-2 adders, exclusive-OR gates **34** and **36**. The other input to each of gates **34** and **36** are second and third PN sequences are I and Q channel "short codes" respectively generated by I and Q Channel PN generators **38** and **40**. The Reverse Access Channel and Reverse Traffic Channel is therefore OQPSK spread prior to actual transmission. This offset quadrature spreading on the Reverse Channel uses the same I and Q PN codes as the Forward Channel I and Q pilot PN codes. The I and Q PN codes generated by generators **38** and **40** are of length 2^{15} and are preferably the zero-time offset codes with respect to the Forward Channel. For purposes of further understanding, on the Forward Channel a pilot signal is generated for each base station. Each base station pilot channel signal is spread by the I and Q PN codes as just mentioned. Base station I and Q PN codes are offset from one another, by a shifting of the code sequence, so as to provide a distinction between base station transmission. The generating functions for the I and Q short PN codes shall be as follows:

$$P_I(x)=x^{15}+x^{13}+x^9+x^8+x^7+x^5+1 \quad (5)$$

and

$$P_Q(x)=x^{15}+x^{12}+x^{11}+x^{10}+x^6+x^5+x^4+x^3+1. \quad (6)$$

Generators **38** and **40** may be constructed as is well known in the art so as to provide an output sequence in accordance with equations (5) and (6).

The I and Q waveforms are respectively output from gates 34 and 36 where respectively provided as inputs to finite impulse response (FIR) filters 42 and 44. FIR filters 42 and 44 are digital filters which bandlimit the resulting I and Q waveforms. These digital filters shape the I and Q waveforms such that the resulting spectrum is contained within a given specral mask. Filters 42 and 44 may be constructed according to well known digital filter techniques and preferably provide a desired frequency response.

The binary '0' and '1' inputs to digital filters 42 and 44, generated by the PN spreading functions, are mapped into +1 and −1, respectively. The sampling frequency of the digital filter is 4.9152 MHz=4×1.2288 MHz. An additional binary '0' and '1' input sequence synchronous with the I and Q digital waveforms shall be provided to each of digital filters 42 and 44. This particular sequence, referred to as a masking sequence, is the output generated by a data burst randomizer. The masking sequence multiplies the I and Q binary waveforms to produce a ternary (−1, 0, and +1) input to the digital filters 42 and 44.

As discussed previously the data rate for transmission on the Reverse Traffic Channel is at one of the rates of equal 9.6, 4.8, 2.4, or 1.2 kbps and varies on a frame-by-frame basis. Since the frames are of a fixed 20 ms length for both the Access Channel and the Reverse Traffic Channel, the number of information bits per frame shall be 192, 96, 48, or 24 for transmission at data rates of 9.6, 4.8, 2.4, or 1.2 kbps, respectively. As described previously, the information is encoded using a rate ½ convolutional encoder and then the code symbols shall be repeated by a factor of 1, 2, 4, or 8 for a data rate of 9.6, 4.8, 2.4, or 1.2 kbps, respectively. The resulting repetition code symbol rate is thus fixed at 28,800 symbols per second (sps). This 28,800 sps stream is block interleaved as previously described.

Prior to transmission, the Reverse Traffic Channel interleaver output stream is gated with a time filter that allows transmission of certain interleaver output symbols and deletion of others. The duty cycle of the transmission gate thus varies with the transmit data rate. When the transmit data rate is 9.6 kbps, the transmission gate allows all interleaver output symbols to be transmitted. When the transmit data rate is 4.8 kbps, the transmission gate allows one-half of the interleaver output symbols to be transmitted, and so forth. The gating process operates by dividing the 20 msec frame into 16 equal length (i.e., 1.25 ms) periods, called power control groups. Certain power control groups are gated on (i.e., transmitted), while other groups are gated off (i.e., not transmitted).

The assignment of gated-on and gated-off groups is referred to as a data burst randomizer function. The gated-on power control groups are pseudo-randomized in their positions within the frame so that the actual traffic load on the Reverse CDMA Channel is averaged, assuming a random distribution of the flames for each duty cycle. The gated-on power control groups are such that every code symbol input to the repetition process shall be transmitted once without repetition. During the gated-off periods, the mobile station does not transmit energy, thus reducing the interference to other mobile stations operating on the same Reverse CDMA Channel. This symbol gating occurs prior to transmission filtering.

The transmission gating process is not used when the mobile station transmits on the Access Channel. When transmitting on the Access Channel, the code symbols are repeated once (each symbol occurs twice) prior to transmission.

In the implementation of the data burst randomizer function, data burst randomizer logic 46 generates a masking stream of 0's and 1's that randomly mask out the redundant data generated by the code repetition. The masking stream pattern is determined by the frame data rate and by a block of 14 bits taken from the long code sequence generated by generator 30. These mask bits are synchronized with the data flow and the data is selectively masked by these bits through the operation of the digital filters 42 and 44. Within logic 46 the 1.2288 MHz long code sequence output from generator 30 is input to a 14-bit shift register, which is shifted at a 1.2288 MHz rate. The contents of this shift register are loaded into a 14-bit latch exactly one power control group (1.25 ms) before each Reverse Traffic Channel frame boundary. Logic 46 uses this data along with the rate input from microprocessor 18, to determine, according to a predetermined algorithm, the particular power control group(s) in which the data is to be allowed to pass through filters 42 and 46 for transmission. Logic 46 thus outputs for each power control group a '1' or '0' for the entire power control group depending on whether the data is to be filtered out ('0') or passed through ('1'). At the corresponding receiver, which also uses the same long code sequence and a corresponding rate determined for the frame, determines the appropriate power control group(s) in which the data is present.

The I channel data output from filter 42 is provided directly to a digital to analog (D/A) converter and anti-aliasing filter circuit 50. The Q channel data however is output from filter 44 to a delay element 48 which a one-half PN chip time delay (406.9 nsec) in the Q channel data. The Q channel data is output from delay element 48 to digital to analog (D/A) converter and anti-aliasing filter circuit 52. Circuits 50 and 52 convert the digital data to analog form and filter the analog signal. The signals output from circuits 50 and 52 are provided to Offset Quadrature Phase Shift Key (OQPSK) modulator 54 where modulated and output to RF transmitter circuit 56. Circuit 56 amplifies, filters and frequency upconverts the signal for transmission. The signal is output from circuitry 56 to antenna 58 for communication to the base station.

It should be understood that the exemplary embodiment of the present invention discusses the formatting of data for modulation and transmission with respect to a mobile station. It should be understood that the data formatting is the same for a cell base station, however the modulation may be different.

In an improved embodiment, the present invention may be designed to operate with two alternative sets of data rates. In the first exemplary embodiment, primary traffic is transmitted in frames at the 9.6 kbps, 4.8 kbps, 2.4 kbps and 1.2 kbps rates. These rates comprise a set of data rates referred to herein as rate set 1. In an improved embodiment of the present invention, primary traffic can also be transmitted in frames at the rates of 14.4 kbps, 7.2 kbps, 3.6 kbps and 1.8 kbps thus permitting higher rate vocoders and other data. These rates comprise a set of data rates referred to herein as rate set 2. Transmission of data provided at rates within rates set 1 proceeds as described previously. Transmission of rate set 2 frames of data proceeds in a similar manner with slight differences in the generation of frame quality indicator (CRC) bits, the allocation of bits in a frame, and the convolutional encoding of the frames. The differences are described in detail below.

In the exemplary embodiment of the present invention, the frames of rate set 1 are convolutionally encoded at a different rate than frames of rate set 2. Rate set 1 frames are convolutionally encoded at rate ½, while rate set 2 frames are convolutionally encoded at rate ½. In the exemplary embodiment two separate convolutional encoders are pro-

vided. Convolutional encoder **22** is a rate ⅓ convolutional encoder for the encoding of rates set 1 frames and convolutional encoder **23** is a rate ½ convolutional encoder for the encoding of rate set 2 frames. Switch **21** receives a RATE SET signal from microprocessor **18** and accordingly directs the frame to the correct convolutional encoder.

It should be noted that the encoded symbol rates from convolutional encoder **23** are 28.8 ksps, 14.4 ksps, 7.2 ksps and 3.6 ksps are the same rates provided from convolutional encoder **22**. This allows the transmission of rate set 2 frames following the convolutional encoding of the frames to proceed identically as described previously for rate set 1 frames.

In the exemplary embodiment, the generator polynomials for the frame quality indicator used in generator **20**, rate set 2 frames are as follows:

$$g(x)=x^{12}+x^{11}+x^{10}+x^{9}+x^{8}+x^{4}+x+1, \quad (7)$$

for the 12-bit frame quality indicator;

$$g(x)=x^{10}+x^{9}+x^{8}+x^{7}+x^{6}+x^{4}+x^{3}+1 \quad (8)$$

for the 10-bit frame quality indicator;

$$g(x)=x^{8}+x^{7}+x^{4}+x^{3}+x+1 \quad (9)$$

for the 8-bit frame quality indicator; and

$$g(x)=x^{6}+x^{2}+x+1 \quad (10)$$

for the 6-bit frame quality indicator.

The design and implementation of encoders to generate frame quality indicator bits using these polynomials is the same as those described with respect to rate set 1.

A final distinction between rate set 2 frames and rate set 1 frames is the inclusion of an erasure indicator bit. An erasure indicator bit is a feedback signal from the receiving system of the communications device to a remote transmitting device to indicate that a frame erasure has occurred. In the exemplary embodiment this bit is set when the personal station is unable to decide upon the data rate of the received frame or errors are detected. This bit may be based upon other forms of received signal quality metrics such as received signal strength. In response the remote transmitting device can respond to strengthen its signal by increasing its transmission energy or by decreasing its data rate. The erasure bit may be set by either microprocessor **18** or by an additional element, erasure indicator element **19**, both of which would operate in conjunction with a FRAME ERASURE SIGNAL from the receiving system of the communications device (not shown).

Table II shown below illustrates the contents of the exemplary frames of both data rate sets. As described previously, for rate set 1 frames, 9600 bps frames comprise 172 information bits, 12 frame quality indicator bits and 8 tail bits, 4800 bps frames comprise 80 information bits, 8 frame quality indicator bits and 8 tail bits, 2400 bps frames comprise 40 information bits and 8 tail bits, and 1200 bps frames comprise 16 information bits and 8 tail bits. For rate set 2 frames, 14,400 bps frames comprise 267 information bits, 1 erasure indicator bit, 12 frame quality indicator bits and 8 tail bits, 7200 bps frames comprise 125 information bits, 1 erasure indicator bit, 10 frame quality indicator bits and 8 tail bits, 3600 bps frames comprise 55 information bits, 1 erasure indicator bit, 8 frame quality indicator bits and 8 tail bits, and 1800 bps frames comprise 21 information bits, 1 erasure indicator bit, 6 frame quality indicator bits and 8 tail bits.

TABLE II

Rate Set	Transmission Rate (bps)	Number of Bits per Frame: Total	Erasure Indicator	Information	Frame Quality Indicator	Encoder Tail
1	9600	192	0	172	12	8
	4800	96	0	80	8	8
	2400	48	0	40	0	8
	1200	24	0	16	0	8
2	14400	288	1	267	12	8
	7200	144	1	125	10	8
	3600	72	1	55	8	8
	1800	36	1	21	6	8

FIGS. **10***a*–**10***y* illustrate the frame format for frames generated within rate set 2. In FIG. **10***a*, a 14.4 kbps frame is illustrated for transmission of full rate primary traffic. One bit is provided for the erasure indicator bit described above and one reserved bit is provided. A mixed mode bit is set to zero to indicate that the frame consists only of primary traffic data. 265 primary traffic bits are then provided, followed by 12 frame quality indicator bits and 8 tail bits.

In FIG. **10***b*, a 14.4 kbps dim and burst frame is illustrated for transmission of half rate primary traffic and signaling traffic. One bit is provided for the erasure indicator bit and one reserved bit is provided. The mixed mode bit is set to 1 to indicate that the packet consists of data other than primary traffic only. Four frame mode bits are provided to indicate the types of data in the packet. The frame mode bits are set to 0000 to indicate that the data present in the packet is half rate primary traffic and signaling traffic. There are 124 bits of primary traffic and 137 bits of signaling traffic. The frame is accompanied by 12 frame quality indicator bits and 8 tail bits.

In FIG. **10***c*, a 14.4 kbps dim and burst frame is illustrated for transmission of quarter rate primary traffic and signaling traffic. One bit is provided for the erasure indicator bit and one reserved bit is provided. The mixed mode bit is set to 1. The frame mode bits are set to 0001 to indicate that the data present in the packet is quarter rate primary traffic and signaling traffic. There are 54 bits of primary traffic and 207 bits of signaling traffic. The frame is accompanied by 12 frame quality indicator bits and 8 tail bits.

In FIG. **10***d*, a 14.4 kbps dim and burst frame is illustrated for transmission of eighth rate primary traffic and signaling traffic. One bit is provided for the erasure indicator bit and one reserved bit is provided. The mixed mode bit is set to 1. The frame mode bits are set to 0010 to indicate that the data present in the packet is eighth rate primary traffic and signaling traffic. The frame has 20 bits of primary traffic and 241 bits of signaling traffic and contains 12 frame quality indicator bits and 8 tail bits.

In FIG. **10***e*, a 14.4 kbps blank and burst frame is illustrated for transmission of signaling traffic. One bit is provided for the erasure indicator bit and one reserved bit is provided. The mixed mode bit is set to 1. The frame mode bits are set to 0011 to indicate that the data present in the packet is signaling traffic. There are 261 bits of signaling traffic, 12 frame quality indicator bits and 8 tail bits.

In FIG. **10***f*, a 7.2 kbps frame is illustrated for transmission of half rate primary traffic only. An erasure indicator bit is provided. The mixed mode bit is set to 0. There are 124 bits of primary traffic provided, 10 frame quality indicator bits and 8 tail bits.

In FIG. **10***g*, a 7.2 kbps dim and burst frame is illustrated for transmission of quarter rate primary traffic with signaling

traffic. An erasure indicator bit is provided. The mixed mode bit is set to 1. Three frame mode bits are set to 000. There are 54 bits of primary traffic, 67 bits of signaling traffic, 10 frame quality indicator bits and 8 tail bits.

In FIG. 10*h*, a 7.2 kbps dim and burst frame is illustrated for transmission of eighth rate primary traffic with signaling traffic. An erasure indicator bit is provided. The mixed mode bit is set to 1. Three frame mode bits are set to 001. There are 20 bits of primary traffic, 101 bits of signaling traffic, 10 frame quality indicator bits and 8 tail bits.

In FIG. 10*i*, a 7.2 kbps blank and burst frame is illustrated for transmission of signaling traffic. An erasure indicator bit is provided. The mixed mode bit is set to 1. Three frame mode bits are set to 010. There are 121 bits of signaling traffic, 10 frame quality indicator bits and 8 tail bits.

In FIG. 10*j*, a 3.6 kbps frame is illustrated for transmission of quarter rate primary traffic only. An erasure indicator bit is provided. The mixed mode bit is set to 0. No frame mode bits are provided. There are 54 bits of primary traffic, 8 frame quality indicator bits and 8 tail bits.

In FIG. 10*k*, a 3.6 kbps dim and burst frame is illustrated for transmission of eighth rate primary traffic with signaling traffic. An erasure indicator bit is provided. The mixed mode bit is set to 1. Two frame mode bits are set to 00. There are 20 bits of primary traffic, 32 bits of signaling traffic, 8 frame quality indicator bits and 8 tail bits.

In FIG. 10*l*, a 3.6 kbps blank and burst frame is illustrated for transmission of signaling traffic. An erasure indicator bit is provided. The mixed mode bit is set to 1. Two frame mode bits are set to 01. There are 52 bits of signaling traffic, 8 frame quality indicator bits and 8 tail bits.

In FIG. 10*m*, a 1.8 kbps frame is illustrated for transmission of eighth rate primary traffic only. An erasure indicator bit is provided. The mixed mode bit is set to 0. No frame mode bits are provided. There are 20 bits of primary traffic, 6 frame quality indicator bits and 8 tail bits.

In FIG. 10*n*, a 14.4 dim and burst frame is illustrated for transmission of half rate primary traffic and secondary traffic. An erasure indicator bit is provided with a reserved bit. The mixed mode bit is set to 1. The frame mode bits are set to 0100 to indicate that the data present in the packet is half rate primary traffic and signaling traffic. There are 124 bits of primary traffic, 137 bits of secondary traffic, 12 frame quality indicator bits and 8 tail bits.

In FIG. 10*o*, a 14.4 kbps dim and burst frame is illustrated for transmission of quarter rate primary traffic and secondary traffic. An erasure indicator bit is provided along with a reserved bit. The mixed mode bit is set to 1. The four frame mode bits are set to 0101 to indicate that the data present in the packet is quarter rate primary traffic plus secondary traffic. There are 54 bits of primary traffic, 207 bits of secondary traffic, 12 frame quality indicator bits and 8 tail bits.

In FIG. 10*p*, a 14.4 kbps dim and burst frame is illustrated for transmission of a frame consisting of eighth rate primary traffic and secondary traffic. An erasure indicator bit is provided with a reserved bit. The mixed mode bit is set to 1. The frame mode bits are set to 0110 to indicate that the data present in the packet is eighth rate primary traffic plus secondary traffic. There are 20 bits of primary traffic, 241 bits of secondary traffic, 12 frame quality indicator bits and 8 tail bits.

In FIG. 10*q*, a 14.4 kbps blank and burst frame is illustrated for transmission of secondary traffic. An erasure indicator bit is provided along with a reserved bit. The mixed mode bit is set to 1. The four frame mode bits are set to 0111. There are 261 bits of secondary traffic, 12 frame quality indicator bits and 8 tail bits.

FIG. 10*r* illustrates a 14.4 kbps dim and burst frame for the transmission of eighth rate primary data, secondary and signaling traffic. An erasure indicator bit is provided with a reserved bit. The mixed mode bit is set to 1. The frame mode bits are set to 1000 to indicate that the data present in the packet is eighth rate primary data, secondary and signaling traffic. There are 20 bits of primary traffic, 221 bits of signaling traffic, 20 bits of secondary traffic, 12 frame quality indicator bits and 8 tail bits.

FIG. 10*s* illustrates a 7.2 kbps dim and burst frame with quarter rate primary and secondary traffic. An erasure indicator bit is provided. The mixed mode bit is set to 1. The frame mode bits are set to 011. There are 54 bits of primary traffic, 67 bits of secondary traffic, 12 frame quality indicator bits and 8 tail bits.

FIG. 10*t* illustrates a 7.2 kbps dim and burst frame with eighth rate primary and secondary traffic. An erasure indicator bit is provided. The mixed mode bit is set to 1. The frame mode bits are set to 100. There are 20 bits of primary traffic, 101 bits of secondary traffic, 10 frame quality indicator bits and 8 tail bits.

FIG. 10*u* illustrates a 7.2 kbps blank and burst frame with secondary traffic only. An erasure indicator bit is provided. The mixed mode bit is set to 1. The frame mode bits are set to 101. There are 121 bits of secondary traffic, 10 frame quality indicator bits and 8 tail bits.

FIG. 10*v* illustrates a 7.2 kbps dim and burst frame with eighth rate primary traffic, secondary and signaling traffic. An erasure indicator bit is provided. The mixed mode bit is set to 1. The frame mode bits are set to 110. There are 20 bits of primary traffic, 81 bits of signaling traffic, 20 bits of secondary traffic, 10 frame quality indicator bits and 8 tail bits.

FIG. 10*w* illustrates a 3.6 kbps dim and burst frame with eighth rate primary traffic and secondary traffic. An erasure indicator bit is provided. The mixed mode bit is set to 1. The frame mode bits are set to 10. There are 20 bits of primary traffic, 32 bits of secondary traffic, 8 frame quality indicator bits and 8 tail bits.

FIG. 10*x* illustrates a 3.6 kbps blank and burst frame with secondary traffic only. An erasure indicator bit is provided. The mixed mode bit is set to 1. The frame mode bits are set to 11. There are 52 bits of secondary traffic, 8 frame quality indicator bits and 8 tail bits.

FIG. 10*y* illustrates a 1.8 kbps blank and burst frame with secondary traffic only. An erasure indicator bit is provided. The mixed mode bit is set to 1. There are 20 bits of secondary traffic, 6 frame quality indicator bits and 8 tail bits.

The previous description of the preferred embodiments is provided to enable any person skilled in the art to make or use the present invention. The various modifications to these embodiments will be readily apparent to those skilled in the art, and the generic principles defined herein may be applied to other embodiments without the use of the inventive faculty. Thus, the present invention is not intended to be limited to the embodiments shown herein but is to be accorded the widest scope consistent with the principles and novel features disclosed herein.

We claim:

1. In a communication system, a method for transmitting a first data frame at a data rate included within a first predetermined data rate set of a set of rate sets, comprising the steps of:

receiving said data frame;

generating a set of parity check bits and tail bits in accordance with a frame rate of said first data frame;

encoding an augmented data frame derived from said first data frame, said parity check bits, and said tail bits, wherein an encoding rate of said encoding is determined in accordance with said first predetermined data rate set of said first data frame; and

transmitting said encoded augmented data frame.

2. The method of claim 1 further including the step of transmitting a second data frame at a selected data rate included within a second predetermined set of data rates, wherein there is a multiplicative factor between corresponding data rates of said first predetermined data rate set and said second predetermined data rate set.

3. The method of claim 2 wherein encoding rates associated with said first predetermined data rate set and said second predetermined data rate set are related by an encoding factor inversely proportional to said multiplicative factor.

4. In a communication system, a method for transmitting a first data frame at a given data rate included within a first predetermined set of data rates, comprising the steps of:

receiving said first data frame and a frame rate indication associated therewith;

generating a formatted data frame by formatting said first data frame in accordance with a predetermined format corresponding to said frame rate indication;

encoding said formatted data frame; and

transmitting said encoded formatted data frame.

5. In a communication system, a method for transmitting first and second data frames at first and second data rates, respectively, said first and second data rates being respectively included first and second predetermined sets of data rates, comprising the steps of:

receiving said first and second data frames and first and second frame rate indications respectively associated with said first and second data frames;

generating first and second formatted data frames by formatting said first and second data frames in accordance with first and second predetermined formats corresponding to said first and second frame rate indications, respectively;

encoding said first and second formatted data frames; and

transmitting said first and second encoded formatted data frames.

6. In a communication system, a method for transmitting information from a subscriber unit to a base station comprising the steps of:

providing a first data frame including traffic channel data of a first type;

generating a formatted data frame of a predetermined format using said first data frame, said formatted data frame including at least one frame quality bit;

encoding said formatted data frame at an encoding rate based upon a frame rate associated with said first data frame; and

transmitting said encoded formatted data frame.

7. The method of claim 6 further including the step of inserting at least one tail bit into said formatted data frame.

8. The method of claim 6 further including the steps of:

providing a second data frame including traffic channel data of a second type, and

generating said formatted data frame using both said first and said second data frame.

9. The method of claim 6 wherein said first type of traffic channel data corresponds to primary traffic data.

10. The method of claim 8 wherein said first type of traffic channel data corresponds to primary traffic data, and wherein said second type of traffic channel data corresponds to secondary traffic data.

11. The method of claim 8 wherein said first type of traffic channel data corresponds to primary traffic data, and wherein said second type of traffic channel data corresponds to signaling traffic data.

12. The method of claim 8 further comprising the step of including, within said formatted data frame:

at least one tail bit,

an erasure indicator bit providing an indication of frame erasure,

a mixed mode bit indicative of the inclusion of said second type of traffic channel data within said formatted data frame, and

one or more frame mode bits for identifying said first and second types of traffic channel data.

13. The method of claim 6 further comprising the step of including, within said formatted data frame:

at least one tail bit,

an erasure indicator bit providing an indication of frame erasure, and

one or more frame mode bits for identifying said first type of traffic channel data.

14. The method of claim 12 wherein said one or more frame mode bits further identify first and second frame rates respectively associated with said first and second types of traffic channel data.

15. The method of claim 13 wherein said one or more frame mode bits further identify a frame rate associated with said first type of traffic channel data.

16. In a communication system, a method for transmitting comprising the steps of:

providing a first data frame including traffic channel data of a first type;

generating a formatted data frame of a predetermined format, said formatted data frame sequentially including

an erasure indicator bit,

a mixed mode bit,

one or more frame mode bits,

a plurality of bits of said traffic channel data of said first type,

one or more frame quality indicator bits, and

one or more tail bits;

encoding said formatted data frame; and

transmitting said encoded formatted data frame.

17. The method of claim 16 further comprising the step of including, within said formatted data frame, a plurality of bits of said traffic channel data of a second type between said plurality of bits of said traffic channel data of said first type and said one or more frame quality indicator bits.

18. The method of claim 16 further comprising the step of including, within said formatted data frame, a reserved bit between said erasure indicator bit and said mixed mode bit.

19. The method of claim 16 wherein said traffic channel data of said first type corresponds to signaling traffic.

20. The method of claim 16 wherein said traffic channel data of said first type corresponds to secondary traffic.

21. The method of claim 18 wherein said traffic channel data of said first type corresponds to signaling traffic.

22. The method of claim 18 wherein said traffic channel data of said first type corresponds to secondary traffic.

23. The method of claim 17 further comprising the step of including, within said formatted data frame, a reserved bit between said erasure indicator bit and said mixed mode bit.

24. The method of claim 17 wherein said traffic channel data of said first type corresponds to primary traffic and wherein said traffic channel data of said second type corresponds to signaling traffic.

25. The method of claim 17 wherein said traffic channel data of said first type corresponds to primary traffic and wherein said traffic channel data of said second type corresponds to secondary traffic.

26. The method of claim 23 wherein said traffic channel data of said first type corresponds to primary traffic and wherein said traffic channel data of said second type corresponds to signaling traffic.

27. The method of claim 23 wherein said traffic channel data of said first type corresponds to primary traffic and wherein said traffic channel data of said second type corresponds to secondary traffic.

28. The method of claim 17 further comprising the step of including, within said formatted data frame, a plurality of bits of traffic channel data of a third type between said plurality of bits of said traffic channel data of said second type and said one or more frame quality indicator bits.

29. The method of claim 23 further comprising the step of including, within said formatted data frame, a plurality of bits of traffic channel data of a third type between said plurality of bits of said traffic channel data of said second type and said one or more frame quality indicator bits.

30. The method of claim 28 wherein said plurality of bits of traffic channel data of said first type correspond to primary traffic, said plurality of bits of traffic channel data of said second type correspond to signaling traffic, and said plurality of bits of traffic channel data of said third type correspond to secondary traffic.

31. The method of claim 29 wherein said plurality of bits of traffic channel data of said first type correspond to primary traffic, said plurality of bits of traffic channel data of said second type correspond to signaling traffic, and said plurality of bits of traffic channel data of said third type correspond to secondary traffic.

32. In a communication system, a method for transmitting comprising the steps of:

providing a first data frame including primary traffic channel data;

generating a formatted data frame of a predetermined format, said formatted data frame sequentially including

an erasure indicator bit,

a mixed mode bit,

a plurality of bits of said primary traffic channel data,

one or more frame quality indicator bits, and

one or more tail bits;

encoding said formatted data frame; and

transmitting said encoded formatted data frame.

33. The method of claim 32 further comprising the step of including, within said formatted data frame, a reserved bit between said erasure indicator bit and said mixed mode bit.

34. A transmitter for use in a communications system, said transmitter comprising:

means for providing a first data frame including traffic channel data of a first type;

means for generating a formatted data frame of a predetermined format using said first data frame, said formatted data frame including at least one frame quality bit;

means for encoding said formatted data frame at an encoding rate based upon a frame rate associated with said first data frame; and

means for transmitting said encoded formatted data frame.

35. The transmitter of claim 34 further including means for inserting at least one tail bit into said formatted data frame.

36. The transmitter of claim 34 further including:

means for providing a second data frame including traffic channel data of a second type, and

means for generating said formatted data frame using both said first and said second data frame.

37. The transmitter of claim 34 wherein said first type of traffic channel data corresponds to primary traffic data.

38. The transmitter of claim 36 wherein said first type of traffic channel data corresponds to primary traffic data, and wherein said second type of traffic channel data corresponds to secondary traffic data.

39. The transmitter of claim 36 wherein said first type of traffic channel data corresponds to primary traffic data, and wherein said second type of traffic channel data corresponds to signaling traffic data.

40. The transmitter of claim 36 further comprising means for including, within said formatted data frame:

at least one tail bit,

an erasure indicator bit providing an indication of frame erasure,

a mixed mode bit indicative of the inclusion of said second type of traffic channel data within said formatted data frame, and

one or more frame mode bits for identifying said first and second types of traffic channel data.

41. The transmitter of claim 34 further comprising means for including, within said formatted data frame:

at least one tail bit,

an erasure indicator bit providing an indication of frame erasure, and

one or more frame mode bits for identifying said first type of traffic channel data.

42. The transmitter of claim 40 wherein said one or more frame mode bits further identify first and second frame rates respectively associated with said first and second types of traffic channel data.

43. The transmitter of claim 41 wherein said one or more frame mode bits further identify a frame rate associated with said first type of traffic channel data.

44. A transmitter for use in a communication system, said transmitter comprising:

means for providing a first data frame including traffic channel data of a first type;

means for generating a formatted data frame of a predetermined format, said formatted data frame sequentially including

an erasure indicator bit,

a mixed mode bit,

one or more frame mode bits,

a plurality of bits of said traffic channel data of said first type,

one or more frame quality indicator bits, and

one or more tail bits;

means for encoding said formatted data frame; and

means for transmitting said encoded formatted data frame.

45. The transmitter of claim 44 further comprising means for including, within said formatted data frame, a plurality of bits of said traffic channel data of a second type between said plurality of bits of said traffic channel data of said first type and said one or more frame quality indicator bits.

46. The transmitter of claim 44 further comprising means for including, within said formatted data frame, a reserved bit between said erasure indicator bit and said mixed mode bit.

47. The transmitter of claim 44 wherein said traffic channel data of said first type corresponds to signaling traffic.

48. The transmitter of claim 44 wherein said traffic channel data of said first type corresponds to secondary traffic.

49. The transmitter of claim 46 wherein said traffic channel data of said first type corresponds to signaling traffic.

50. The transmitter of claim 46 wherein said traffic channel data of said first type corresponds to secondary traffic.

51. The transmitter of claim 45 further comprising means for including, within said formatted data frame, a reserved bit between said erasure indicator bit and said mixed mode bit.

52. The transmitter of claim 45 wherein said traffic channel data of said first type corresponds to primary traffic and wherein said traffic channel data of said second type corresponds to signaling traffic.

53. The transmitter of claim 45 wherein said traffic channel data of said first type corresponds to primary traffic and wherein said traffic channel data of said second type corresponds to secondary traffic.

54. The transmitter of claim 51 wherein said traffic channel data of said first type corresponds to primary traffic and wherein said traffic channel data of said second type corresponds to signaling traffic.

55. The transmitter of claim 51 wherein said traffic channel data of said first type corresponds to primary traffic and wherein said traffic channel data of said second type corresponds to secondary traffic.

56. The transmitter of claim 45 further comprising means for including, within said formatted data frame, a plurality of bits of traffic channel data of a third type between said plurality of bits of said traffic channel data of said second type and said one or more frame quality indicator bits.

57. The transmitter of claim 51 further comprising means for including, within said formatted data frame, a plurality of bits of traffic channel data of a third type between said plurality of bits of said traffic channel data of said second type and said one or more frame quality indicator bits.

58. The transmitter of claim 56 wherein said plurality of bits of traffic channel data of said first type correspond to primary traffic, said plurality of bits of traffic channel data of said second type correspond to signaling traffic, and said plurality of bits of traffic channel data of said third type correspond to secondary traffic.

59. The transmitter of claim 57 wherein said plurality of bits of traffic channel data of said first type correspond to primary traffic, said plurality of bits of traffic channel data of said second type correspond to signaling traffic, and said plurality of bits of traffic channel data of said third type correspond to secondary traffic.

60. In a communication system, a transmitter for transmitting information from a subscriber unit to a base station, said transmitter comprising:

means for providing a first data frame including primary traffic channel data;

means for generating a formatted data frame of a predetermined format, said formatted data frame sequentially including

an erasure indicator bit,

a mixed mode bit,

a plurality of bits of said primary traffic channel data,

one or more frame quality indicator bits, and

one or more tail bits;

means for encoding said formatted data frame; and

means for transmitting said encoded formatted data frame.

61. The transmitter of claim 60 further comprising means for including, within said formatted data frame, a reserved bit between said erasure indicator bit and said mixed mode bit.

62. A system for communicating using formatted data, said system comprising:

a remote unit transmitter including:

means for providing a source of a first of type of traffic bits,

means for providing a first data frame including traffic channel data of a first type,

means for generating a formatted data frame of a predetermined format using said first data frame,

means for encoding said formatted data frame at an encoding rate based upon a frame rate associated with said first data frame, means for transmitting said encoded formatted data frame; and

a base station for receiving said encoded formatted data frame transmitted by said remote unit transmitter.

63. The system of claim 62 wherein said remote unit transmitter further includes means for including, within said formatted data frame, a plurality of bits of said traffic channel data of a second type between said plurality of bits of said traffic channel data of said first type and said one or more frame quality indicator bits.

64. The system of claim 62 wherein said remote unit transmitter further comprises means for including, within said formatted data frame, a reserved bit between said erasure indicator bit and said mixed mode bit.

65. The system of claim 62 wherein said traffic channel data of said first type corresponds to signaling traffic.

66. The system of claim 62 wherein said traffic channel data of said first type corresponds to secondary traffic.

67. The system of claim 64 wherein said traffic channel data of said first type corresponds to signaling traffic.

68. The system of claim 64 wherein said traffic channel data of said first type corresponds to secondary traffic.

69. The system of claim 63 wherein said remote unit transmitter further comprises means for including, within said formatted data frame, a reserved bit between said erasure indicator bit and said mixed mode bit.

70. The system of claim 63 wherein said traffic channel data of said first type corresponds to primary traffic and wherein said traffic channel data of said second type corresponds to signaling traffic.

71. The system of claim 63 wherein said traffic channel data of said first type corresponds to primary traffic and wherein said traffic channel data of said second type corresponds to secondary traffic.

72. The system of claim 69 wherein said traffic channel data of said first type corresponds to primary traffic and wherein said traffic channel data of said second type corresponds to signaling traffic.

73. The system of claim 69 wherein said traffic channel data of said first type corresponds to primary traffic and wherein said traffic channel data of said second type corresponds to secondary traffic.

74. The system of claim 63 wherein said remote unit transmitter further comprises means for including, within said formatted data frame, a plurality of bits of traffic

channel data of a third type between said plurality of bits of said traffic channel data of said second type and said one or more frame quality indicator bits.

75. The system of claim 69 wherein said remote unit transmitter further comprises means for including, within said formatted data frame, a plurality of bits of traffic channel data of a third type between said plurality of bits of said traffic channel data of said second type and said one or more frame quality indicator bits.

76. The system of claim 74 wherein said plurality of bits of traffic channel data of said first type correspond to primary traffic, said plurality of bits of traffic channel data of said second type correspond to signaling traffic, and said plurality of bits of traffic channel data of said third type correspond to secondary traffic.

77. The system of claim 75 wherein said plurality of bits of traffic channel data of said first type correspond to primary traffic, said plurality of bits of traffic channel data of said second type correspond to signaling traffic, and said plurality of bits of traffic channel data of said third type correspond to secondary traffic.

* * * * *

US005778338A

United States Patent [19]

Jacobs et al.

[11] Patent Number: 5,778,338

[45] Date of Patent: Jul. 7, 1998

[54] **VARIABLE RATE VOCODER**

[75] Inventors: **Paul E. Jacobs; William R. Gardner; Chong U. Lee; Klein S. Gilhousen; S. Katherine Lam; Ming-Chang Tsai**, all of San Diego, Calif.

[73] Assignee: **QualComm Incorporated**, San Diego, Calif.

[21] Appl. No.: **788,728**

[22] Filed: **Jan. 23, 1997**

Related U.S. Application Data

[62] Division of Ser. No. 363,170, Dec. 23, 1994, Pat. No. 5,657,420, which is a division of Ser. No. 4,484, Jan. 14, 1993, Pat. No. 5,414,796, which is a continuation of Ser. No. 713,661, Jun. 11, 1991, abandoned.

[51] Int. Cl.[6] **G01L 5/00**

[52] U.S. Cl. **704/223**; 704/221; 704/229; 704/224; 704/201

[58] Field of Search 395/2.38, 2.28, 395/2.31, 2.32

[56] **References Cited**

U.S. PATENT DOCUMENTS

3,988,674	10/1976	Sciulli	370/505
4,831,624	5/1989	McLaughlin et al.	371/37.1
5,097,507	3/1992	Zinser et al.	395/2.35
5,414,796	5/1995	Jacobs et al.	395/2.3
5,495,555	2/1996	Swaminathan	395/2.16
5,537,410	7/1996	Li	370/465
5,566,206	10/1996	Butler et al.	375/225
5,596,676	1/1997	Swaminathan et al.	395/2.17

Primary Examiner—David R. Hudspeth
Assistant Examiner—Vijay B. Chawan
Attorney, Agent, or Firm—Russell B. Miller; Linli L. Golden

[57] **ABSTRACT**

An apparatus and method for performing speech signal compression, by variable rate coding of frames of digitized speech samples. The level of speech activity for each frame of digitized speech samples is determined and an output data packet rate is selected from a set of rates based upon the determined level of frame speech activity. A lowest rate of the set of rates corresponds to a detected minimum level of speech activity, such as background noise or pauses in speech, while a highest rate corresponds to a detected maximum level of speech activity, such as active vocalization. Each frame is then coded according to a predetermined coding format for the selected rate wherein each rate has a corresponding number of bits representative of the coded frame. A data packet is provided for each coded frame with each output data packet of a bit rate corresponding to the selected rate.

At the decoder, if a frame is lost due to a channel error, the error is masked by maintaining a fraction of the previous frame's energy and smoothly transitioning to background noise.

8 Claims, 22 Drawing Sheets

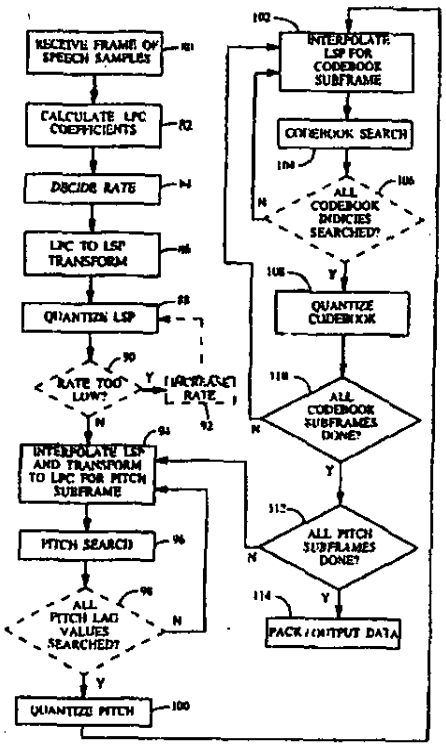

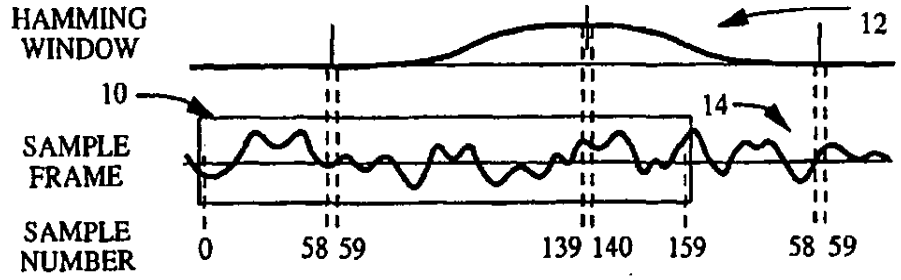

FIG. 1a

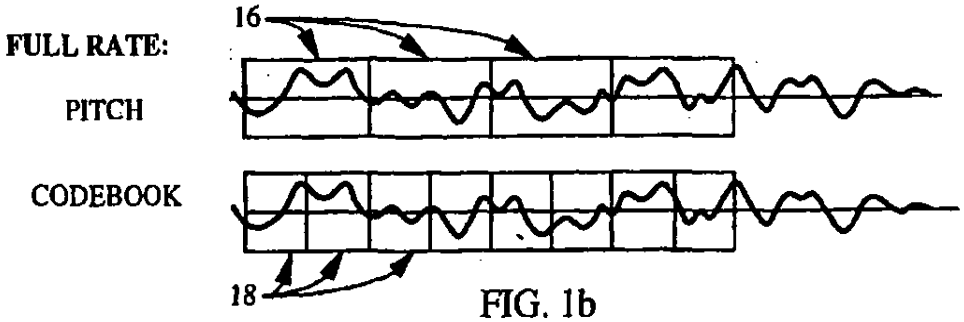

FIG. 1b

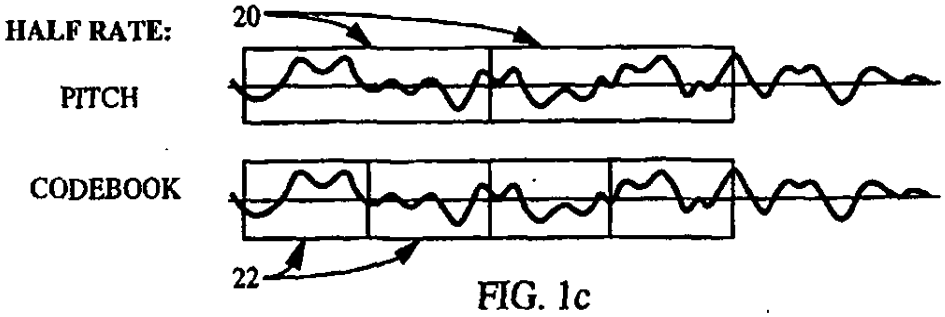

FIG. 1c

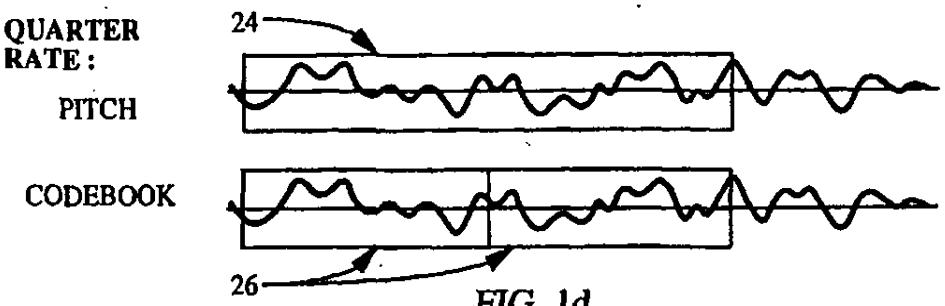

FIG. 1d

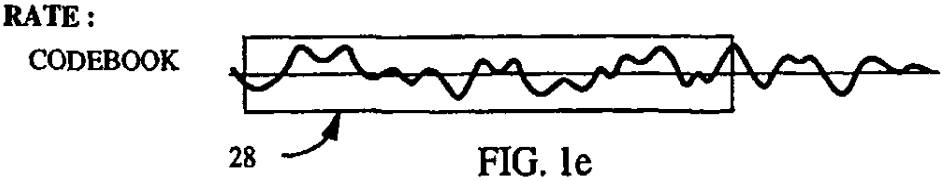

FIG. 1e

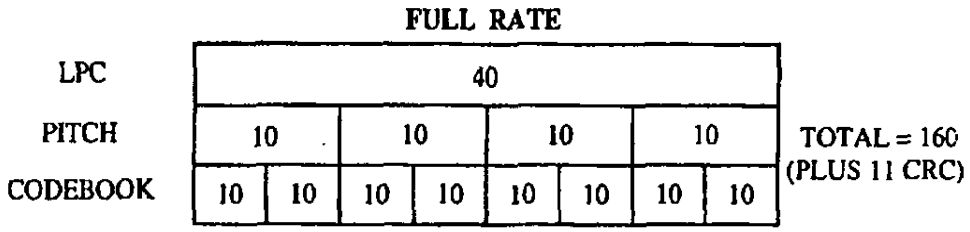

FIG. 2a

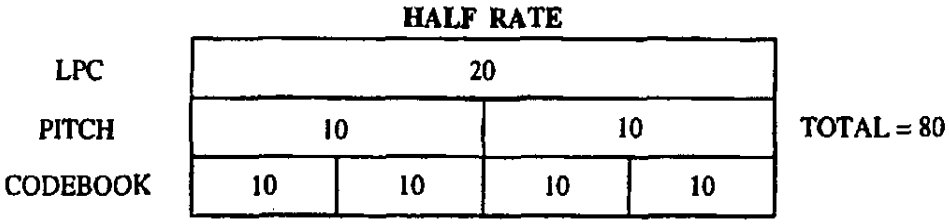

FIG. 2b

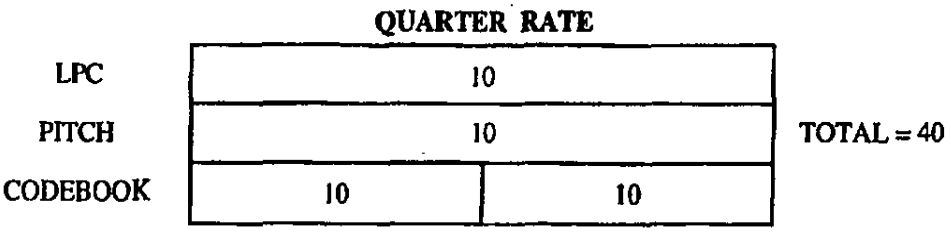

FIG. 2c

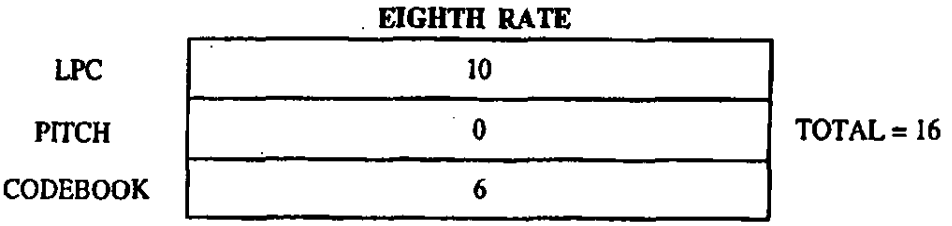

FIG. 2d

FIG. 3

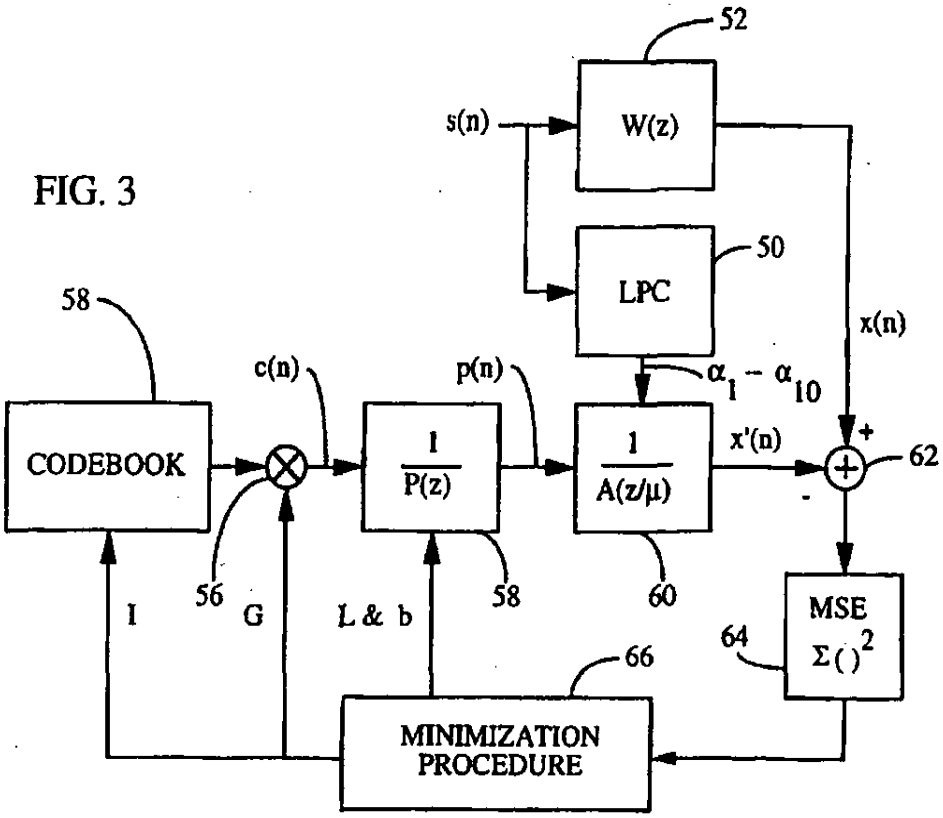
52
s(n)
W(z)
LPC
50
58
x(n)
c(n)
p(n)
$\alpha_1 - \alpha_{10}$
CODEBOOK
1/P(z)
1/A(z/μ)
x'(n)
+
62
-
56
58
60
I
G
L & b
MSE
$\Sigma()^2$
64
66
MINIMIZATION PROCEDURE

FIG. 5

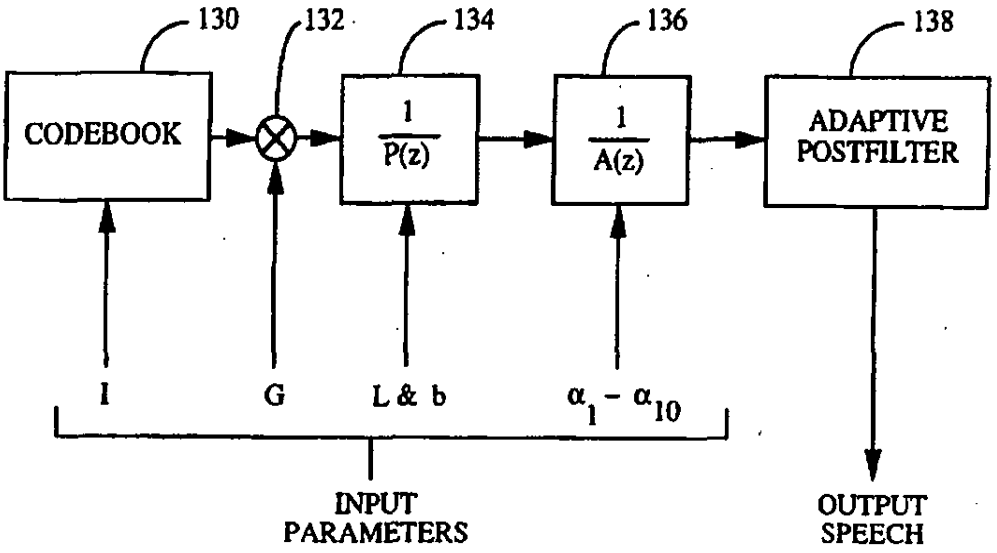
130
132
134
136
138
CODEBOOK
1/P(z)
1/A(z)
ADAPTIVE POSTFILTER
I
G
L & b
$\alpha_1 - \alpha_{10}$
INPUT PARAMETERS
OUTPUT SPEECH

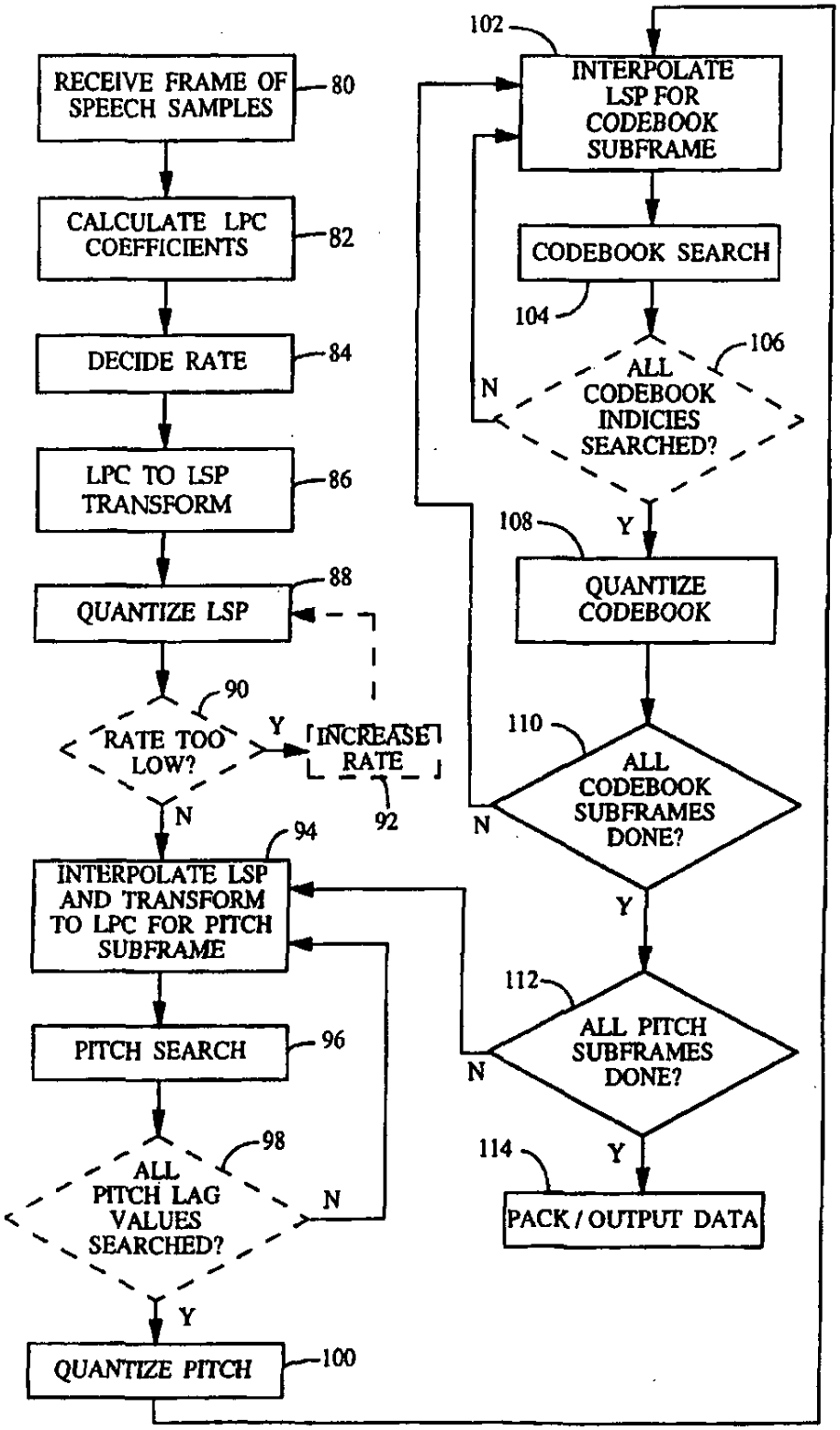
RECEIVE FRAME OF SPEECH SAMPLES
80
CALCULATE LPC COEFFICIENTS
82
DECIDE RATE
84
LPC TO LSP TRANSFORM
86
QUANTIZE LSP
88
RATE TOO LOW?
90
Y
INCREASE RATE
92
N
INTERPOLATE LSP AND TRANSFORM TO LPC FOR PITCH SUBFRAME
94
PITCH SEARCH
96
ALL PITCH LAG VALUES SEARCHED?
98
N
Y
QUANTIZE PITCH
100
102
INTERPOLATE LSP FOR CODEBOOK SUBFRAME
CODEBOOK SEARCH
104
ALL CODEBOOK INDICIES SEARCHED?
106
N
Y
108
QUANTIZE CODEBOOK
ALL CODEBOOK SUBFRAMES DONE?
110
N
Y
ALL PITCH SUBFRAMES DONE?
112
N
Y
114
PACK / OUTPUT DATA

FIG. 4

FIG. 6

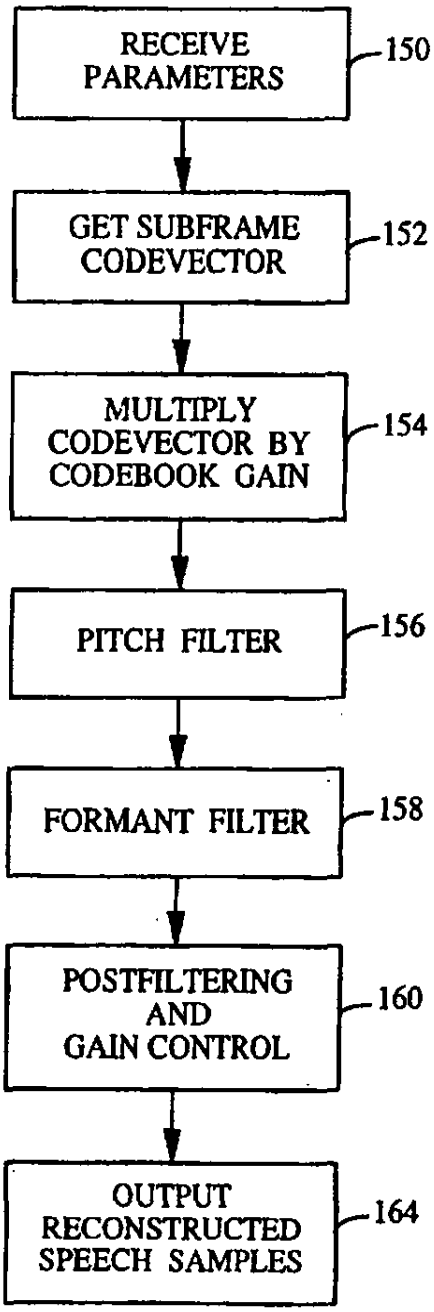
RECEIVE PARAMETERS
150
GET SUBFRAME CODEVECTOR
152
MULTIPLY CODEVECTOR BY CODEBOOK GAIN
154
PITCH FILTER
156
FORMANT FILTER
158
POSTFILTERING AND GAIN CONTROL
160
OUTPUT RECONSTRUCTED SPEECH SAMPLES
164

FIG. 7a

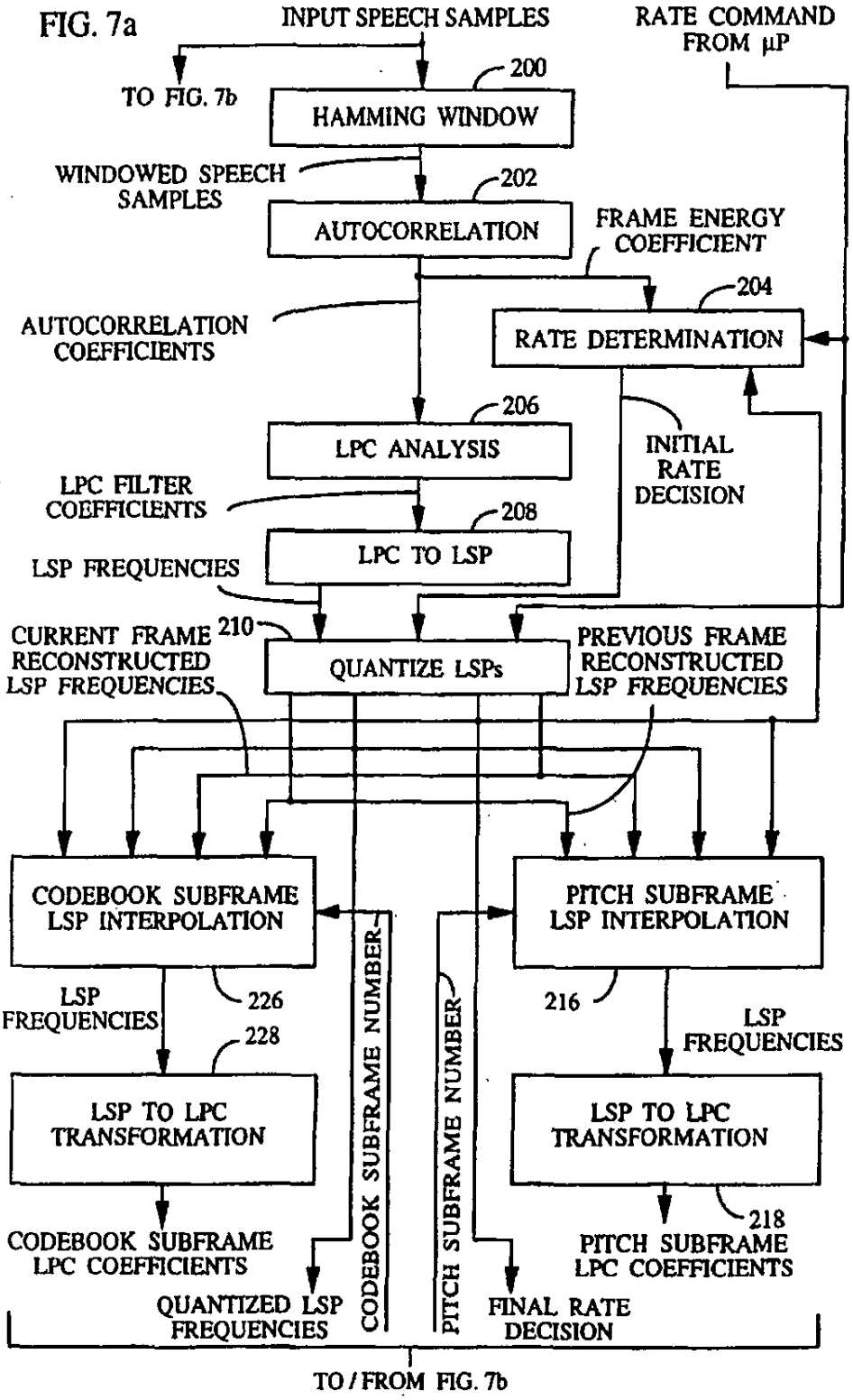
INPUT SPEECH SAMPLES
RATE COMMAND FROM µP
TO FIG. 7b
200
HAMMING WINDOW
WINDOWED SPEECH SAMPLES
202
AUTOCORRELATION
FRAME ENERGY COEFFICIENT
204
AUTOCORRELATION COEFFICIENTS
RATE DETERMINATION
206
LPC ANALYSIS
INITIAL RATE DECISION
LPC FILTER COEFFICIENTS
208
LPC TO LSP
LSP FREQUENCIES
CURRENT FRAME RECONSTRUCTED LSP FREQUENCIES
210
QUANTIZE LSPs
PREVIOUS FRAME RECONSTRUCTED LSP FREQUENCIES
CODEBOOK SUBFRAME LSP INTERPOLATION
PITCH SUBFRAME LSP INTERPOLATION
LSP FREQUENCIES
226
216
LSP FREQUENCIES
228
LSP TO LPC TRANSFORMATION
LSP TO LPC TRANSFORMATION
218
CODEBOOK SUBFRAME LPC COEFFICIENTS
PITCH SUBFRAME LPC COEFFICIENTS
CODEBOOK SUBFRAME NUMBER
PITCH SUBFRAME NUMBER
QUANTIZED LSP FREQUENCIES
FINAL RATE DECISION
TO / FROM FIG. 7b

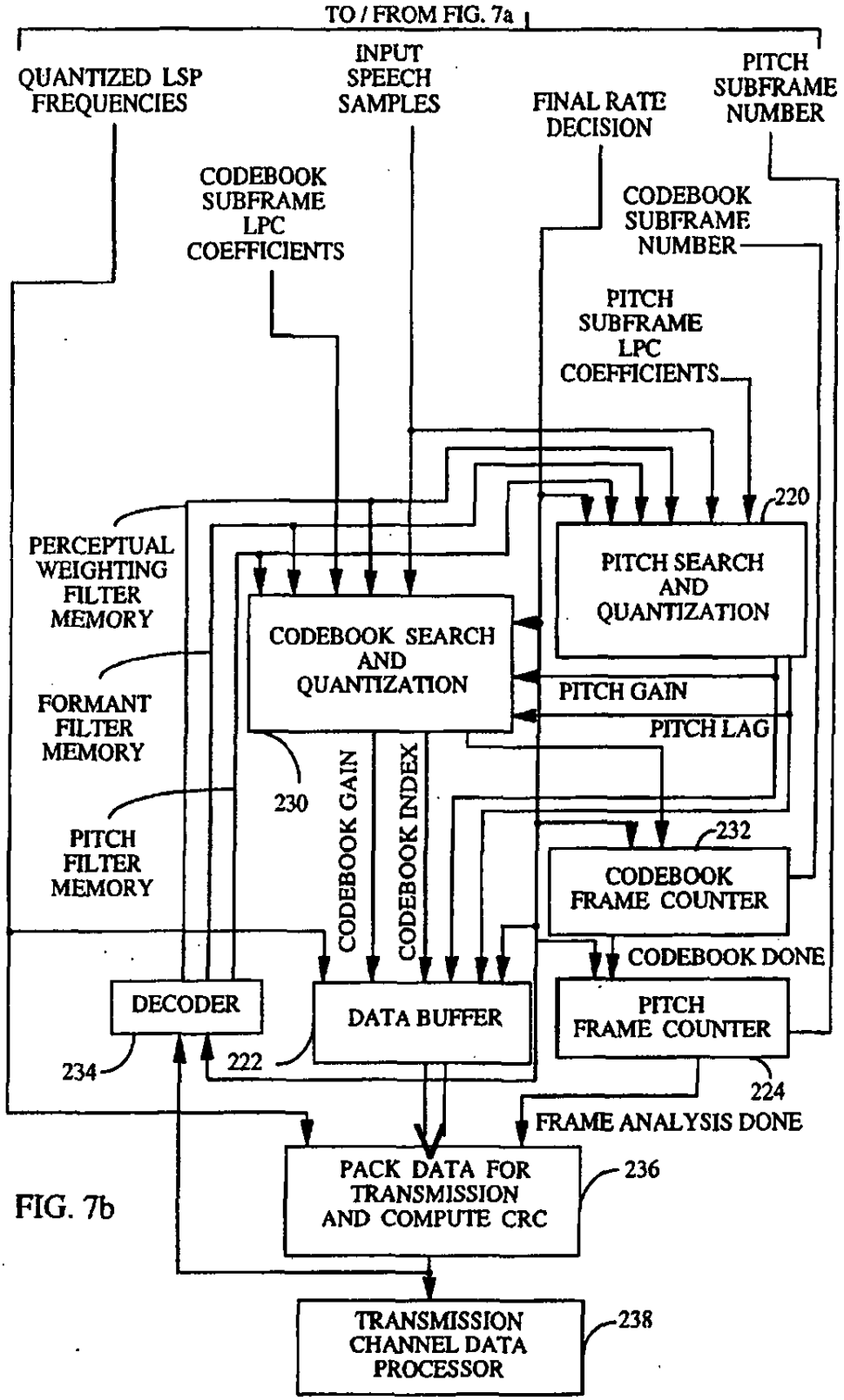
TO / FROM FIG. 7a
QUANTIZED LSP FREQUENCIES
INPUT SPEECH SAMPLES
FINAL RATE DECISION
PITCH SUBFRAME NUMBER
CODEBOOK SUBFRAME LPC COEFFICIENTS
CODEBOOK SUBFRAME NUMBER
PITCH SUBFRAME LPC COEFFICIENTS
220
PERCEPTUAL WEIGHTING FILTER MEMORY
PITCH SEARCH AND QUANTIZATION
CODEBOOK SEARCH AND QUANTIZATION
PITCH GAIN
PITCH LAG
FORMANT FILTER MEMORY
230
CODEBOOK GAIN
CODEBOOK INDEX
232
PITCH FILTER MEMORY
CODEBOOK FRAME COUNTER
CODEBOOK DONE
DECODER
DATA BUFFER
PITCH FRAME COUNTER
234
222
224
FRAME ANALYSIS DONE
PACK DATA FOR TRANSMISSION AND COMPUTE CRC
236
TRANSMISSION CHANNEL DATA PROCESSOR
238

FIG. 7b

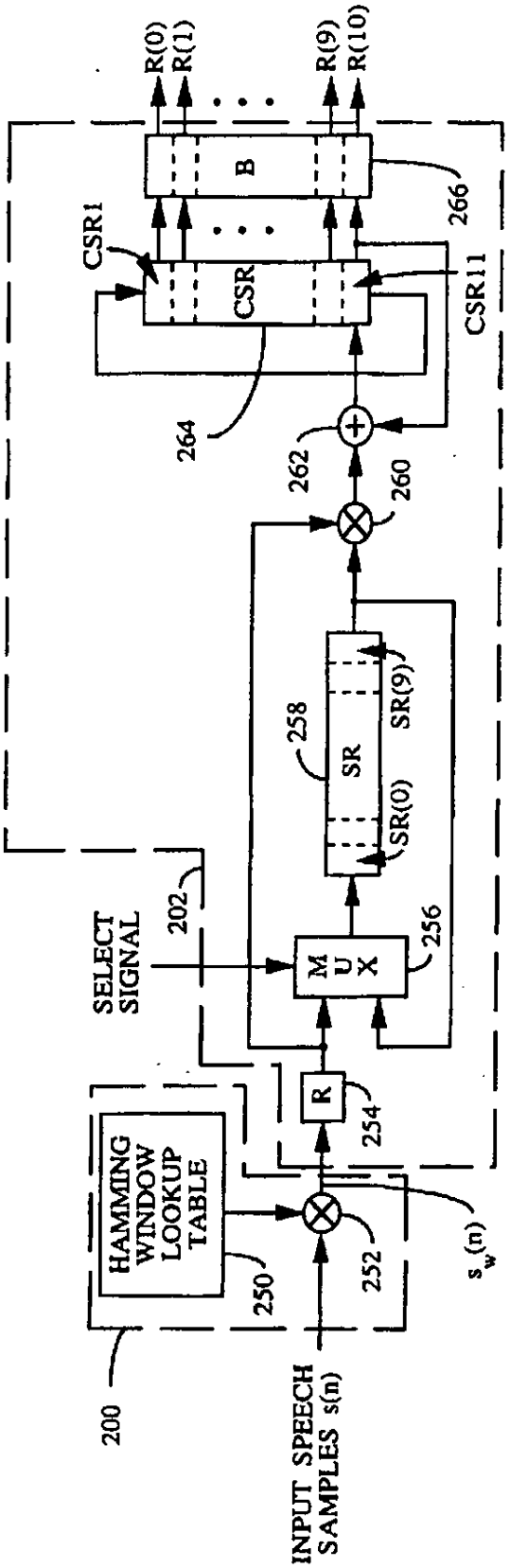
R(0)
R(1)
R(9)
R(10)
B
266
CSR1
CSR
CSR11
264
262
260
258
SR
SR(9)
SR(0)
SELECT SIGNAL
202
MUX
256
R
254
HAMMING WINDOW LOOKUP TABLE
250
252
$s_w(n)$
200
INPUT SPEECH SAMPLES s(n)

FIG. 8

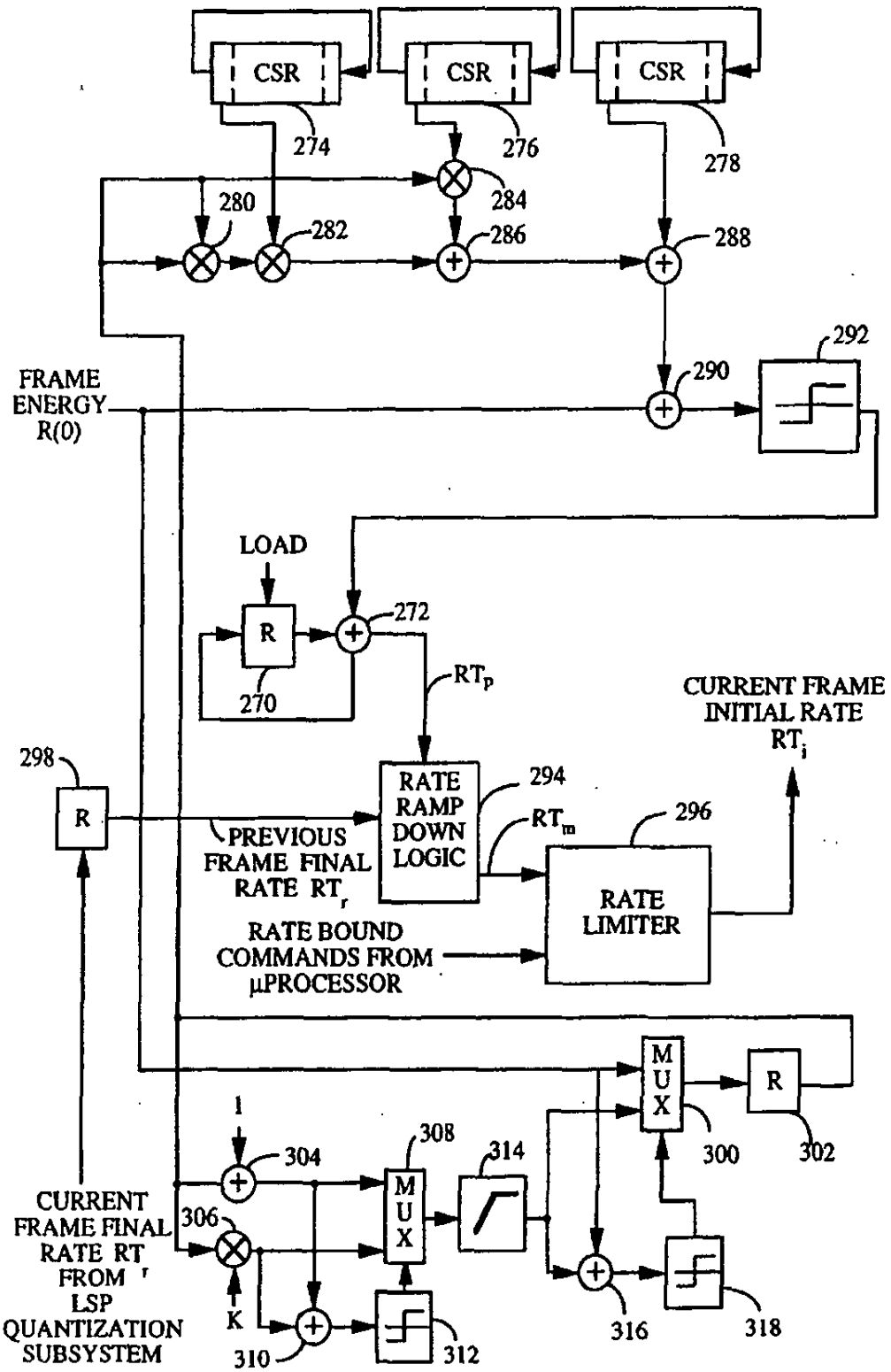
CSR
CSR
CSR
274
276
278
280
282
284
286
288
290
292
FRAME ENERGY R(0)
LOAD
R
270
272
RTp
CURRENT FRAME INITIAL RATE RTi
298
R
PREVIOUS FRAME FINAL RATE RTf
RATE RAMP DOWN LOGIC
294
RTm
296
RATE LIMITER
RATE BOUND COMMANDS FROM µPROCESSOR
MUX
R
300
302
1
304
308
314
306
K
310
312
316
318
CURRENT FRAME FINAL RATE RTf FROM LSP QUANTIZATION SUBSYSTEM

FIG. 9

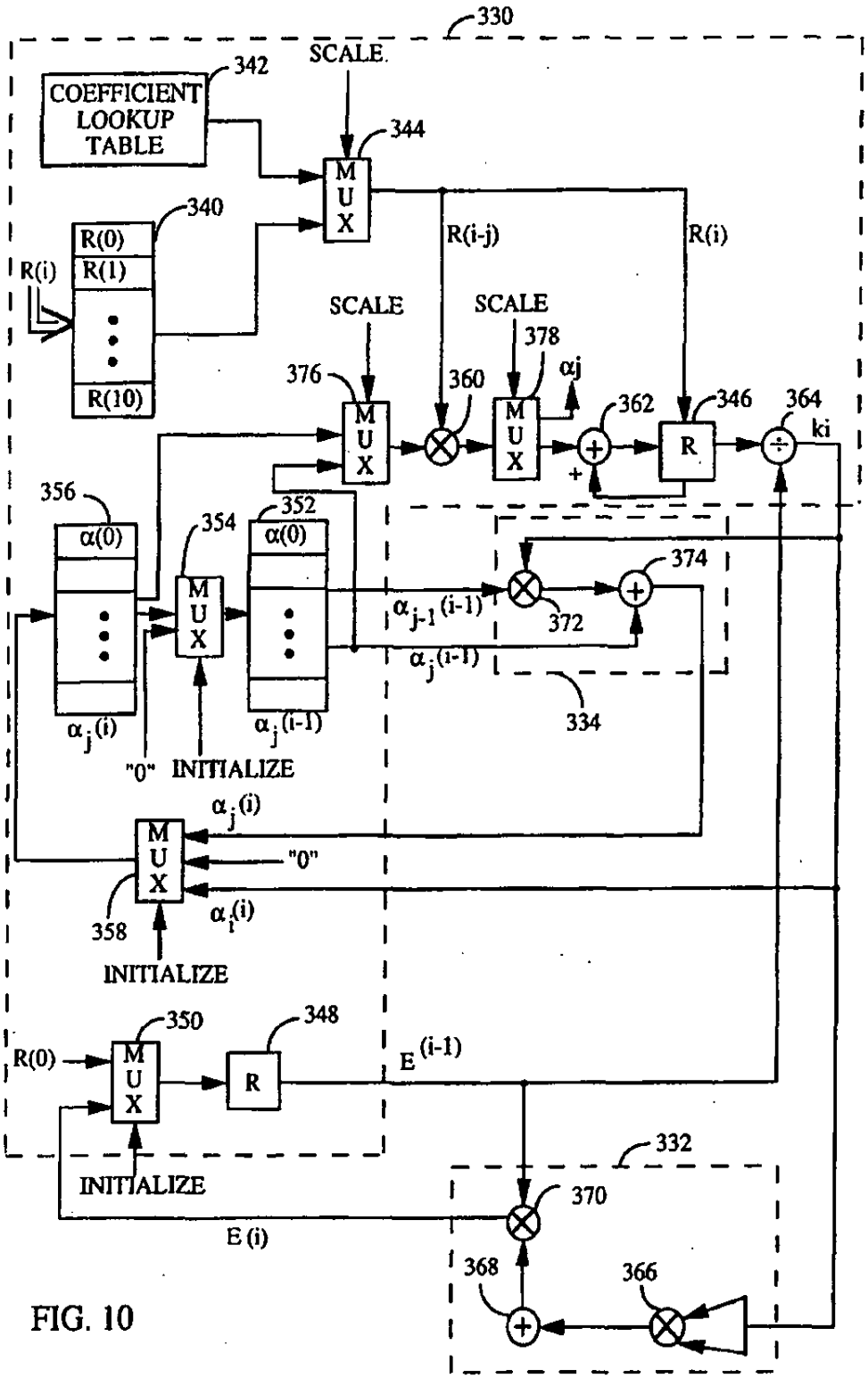
330
SCALE
342
COEFFICIENT LOOKUP TABLE
344
MUX
340
R(0)
R(1)
R(10)
R(i)
R(i-j)
R(i)
SCALE
SCALE
378
αj
376
360
362
346
364
ki
R
356
α(0)
354
352
α(0)
374
372
αj-1 (i-1)
αj (i-1)
αj (i)
αj (i-1)
334
"0"
INITIALIZE
αj (i)
"0"
358
αi (i)
INITIALIZE
350
348
R(0)
R
E (i-1)
INITIALIZE
332
370
E (i)
368
366

FIG. 10

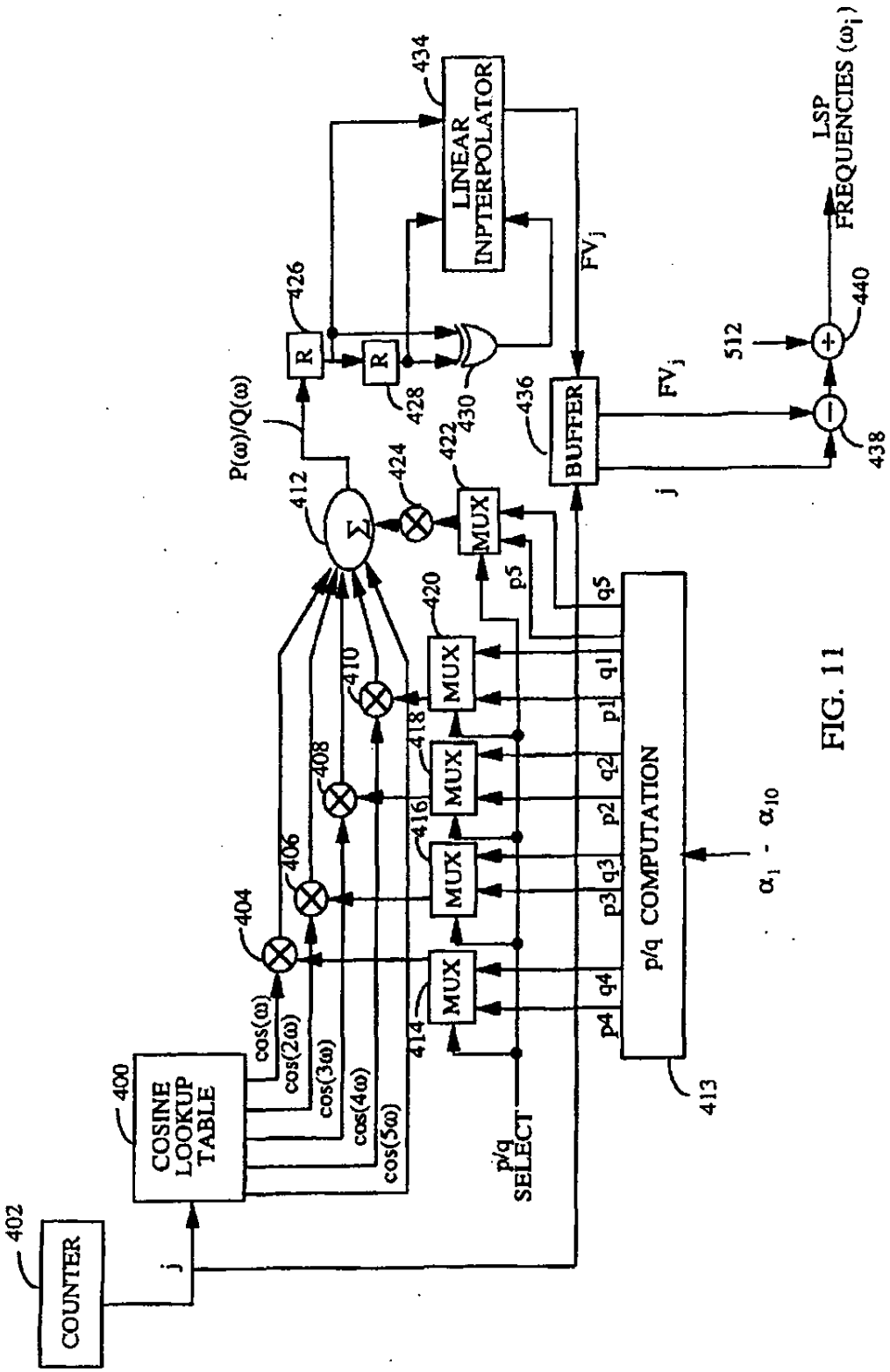
LINEAR INTERPOLATOR
434
LSP FREQUENCIES (ω_j)
FV_j
426
428
430
436
BUFFER
512
440
438
$P(\omega)/Q(\omega)$
412
424
422
MUX
420
410
408
406
404
418
416
414
p5
q5
q1
p1
q2
p2
q3
p3
q4
p4
p/q COMPUTATION
413
α_i - α_{10}
COSINE LOOKUP TABLE
400
cos(ω)
cos(2ω)
cos(3ω)
cos(4ω)
cos(5ω)
p/q SELECT
COUNTER
402
j

FIG. 11

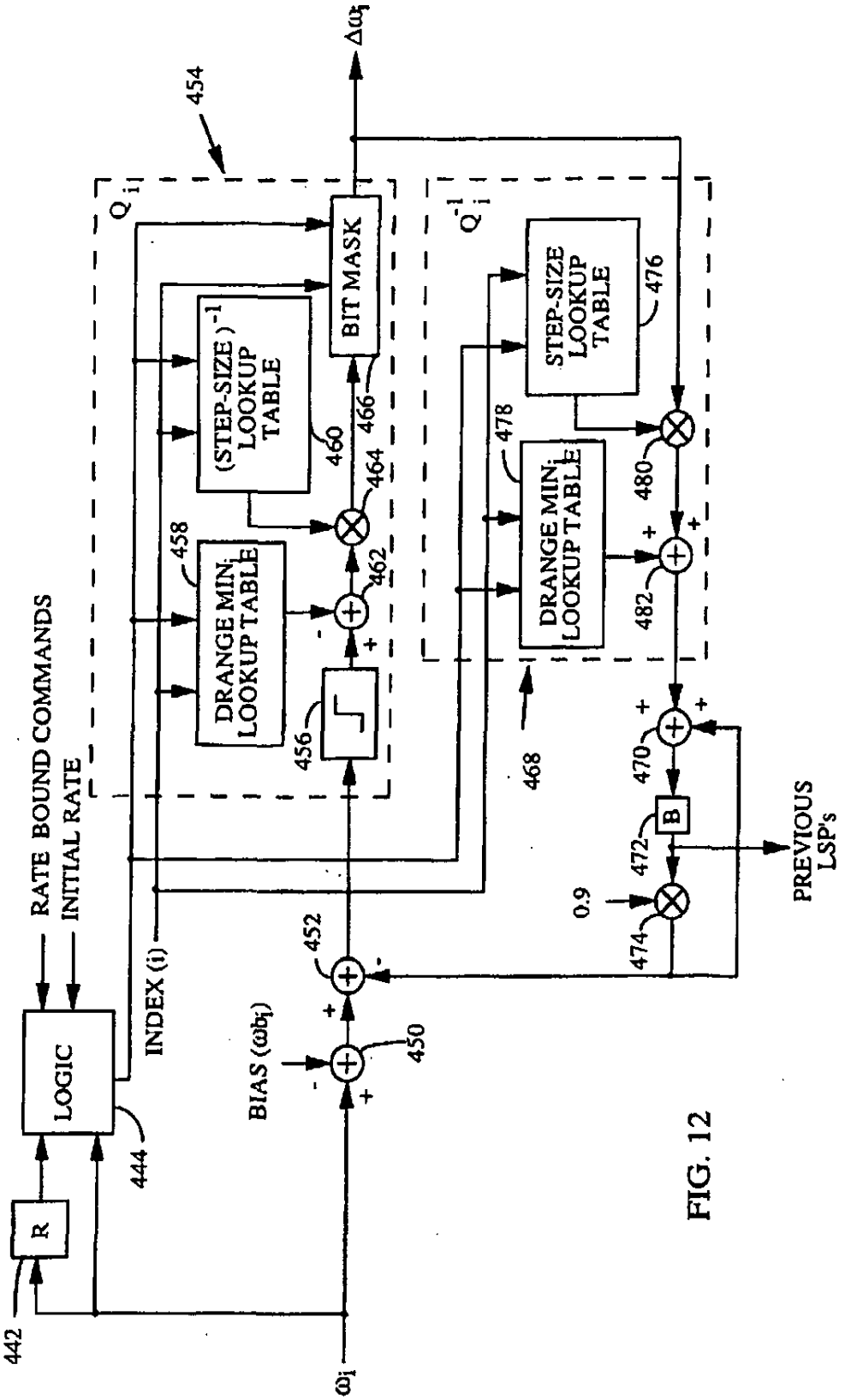
RATE BOUND COMMANDS
INITIAL RATE
INDEX (i)
LOGIC
444
R
442
BIAS (ωb_i)
450
452
454
Q_i
$\Delta\omega_i$
BIT MASK
(STEP-SIZE)$^{-1}$ LOOKUP TABLE
460
466
464
462
458
DRANGE MIN$_i$ LOOKUP TABLE
456
ω_i
Q_i^{-1}
STEP-SIZE LOOKUP TABLE
476
478
DRANGE MIN$_i$ LOOKUP TABLE
480
482
468
470
B
472
0.9
474
PREVIOUS LSP's

FIG. 12

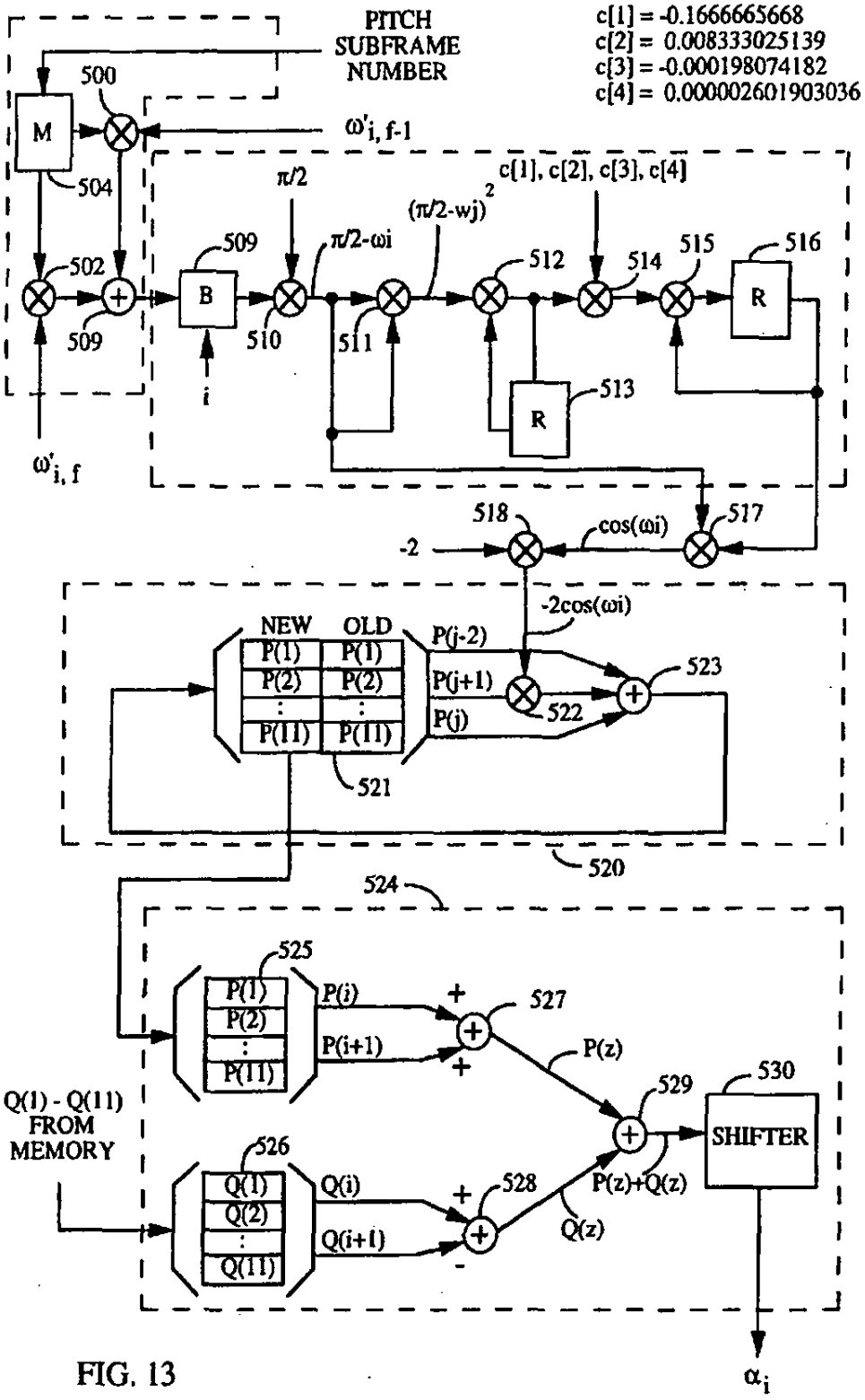
PITCH SUBFRAME NUMBER
c[1] = -0.1666665668
c[2] = 0.008333025139
c[3] = -0.000198074182
c[4] = 0.000002601903036
500
M
504
$\omega'_{i,f-1}$
$\pi/2$
$(\pi/2-wj)^2$
c[1], c[2], c[3], c[4]
502
509
B
510
$\pi/2-\omega i$
511
512
514
515
516
R
513
i
$\omega'_{i,f}$
518
-2
cos(ωi)
517
-2cos(ωi)
NEW
OLD
P(1)
P(2)
P(11)
P(j-2)
P(j+1)
P(j)
522
523
521
520
524
525
P(i)
P(i+1)
527
P(z)
529
530
SHIFTER
Q(1) - Q(11) FROM MEMORY
526
Q(1)
Q(2)
Q(11)
Q(i)
Q(i+1)
528
P(z)+Q(z)
Q(z)
α_i

FIG. 13

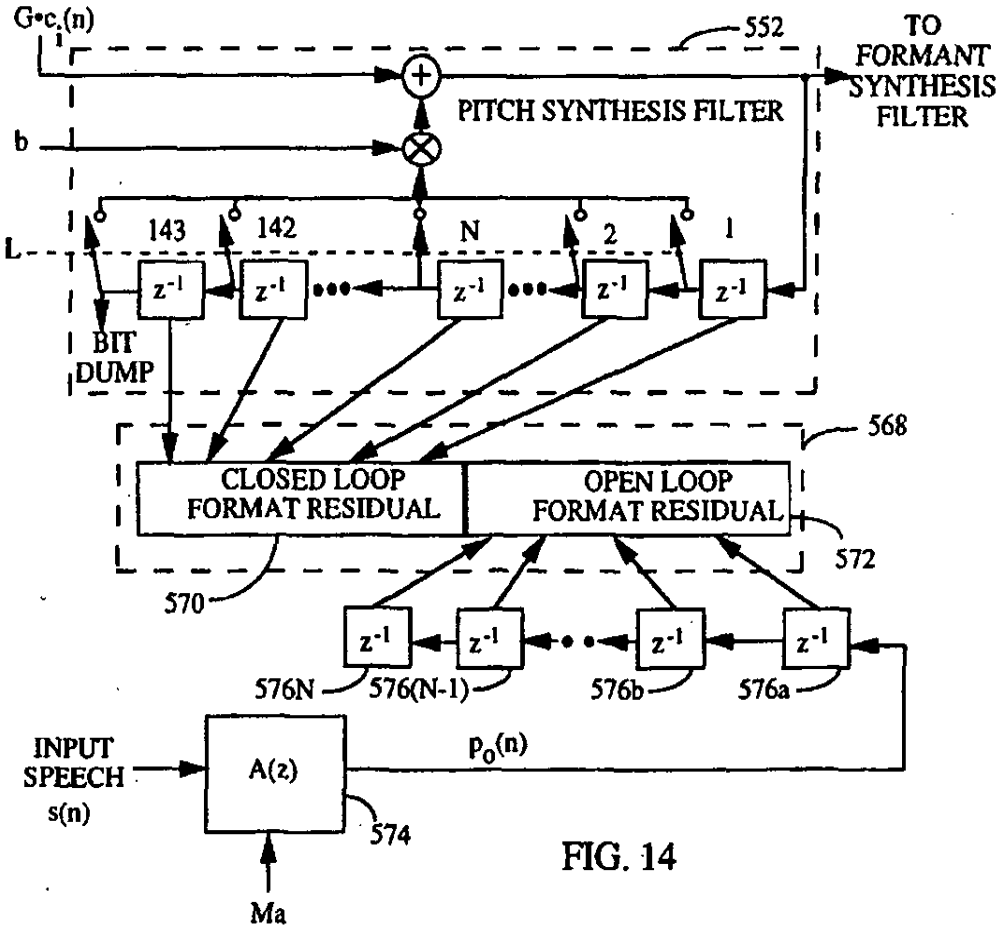
G•c_i(n)
552
TO FORMANT SYNTHESIS FILTER
PITCH SYNTHESIS FILTER
b
L
143
142
N
2
1
z-1
BIT DUMP
568
CLOSED LOOP FORMAT RESIDUAL
OPEN LOOP FORMAT RESIDUAL
572
570
576N
576(N-1)
576b
576a
INPUT SPEECH s(n)
A(z)
p0(n)
574
Ma

FIG. 14

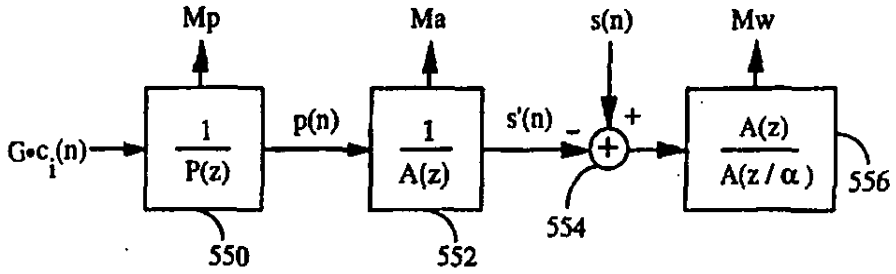
Mp
Ma
s(n)
Mw
G•c_i(n)
1/P(z)
p(n)
1/A(z)
s'(n)
A(z)/A(z/α)
556
554
550
552

FIG. 15

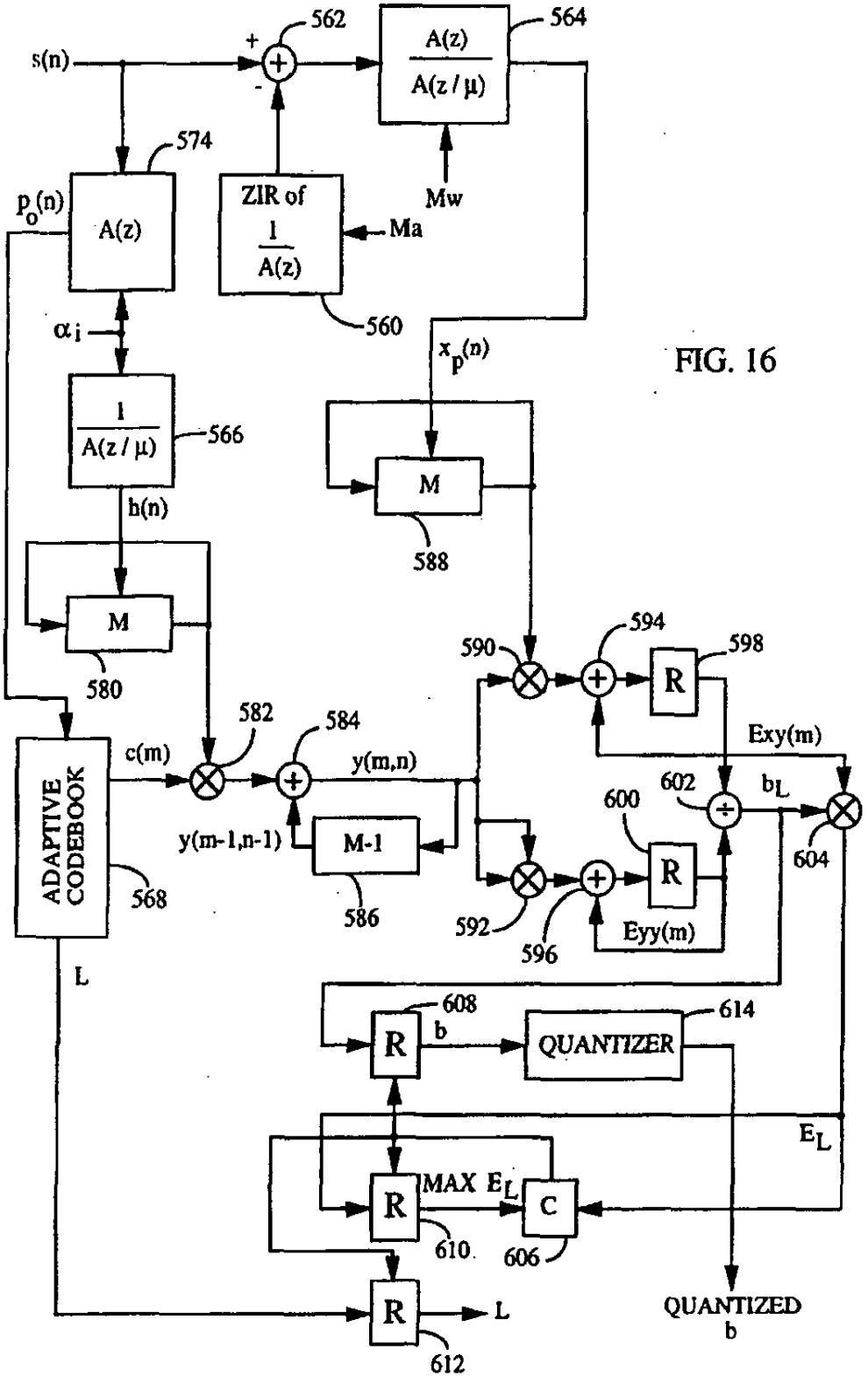
s(n)
562
+
-
A(z)
A(z / μ)
564
574
$p_o(n)$
A(z)
ZIR of
1
A(z)
Ma
Mw
560
α_i
$x_p(n)$
1
A(z / μ)
566
M
588
h(n)
M
580
590
594
598
R
Exy(m)
582
584
c(m)
y(m,n)
602
600
b_L
604
ADAPTIVE CODEBOOK
568
y(m-1,n-1)
M-1
586
592
596
R
Eyy(m)
L
608
R
b
QUANTIZER
614
E_L
R
MAX E_L
C
610
606
R
L
612
QUANTIZED
b

FIG. 16

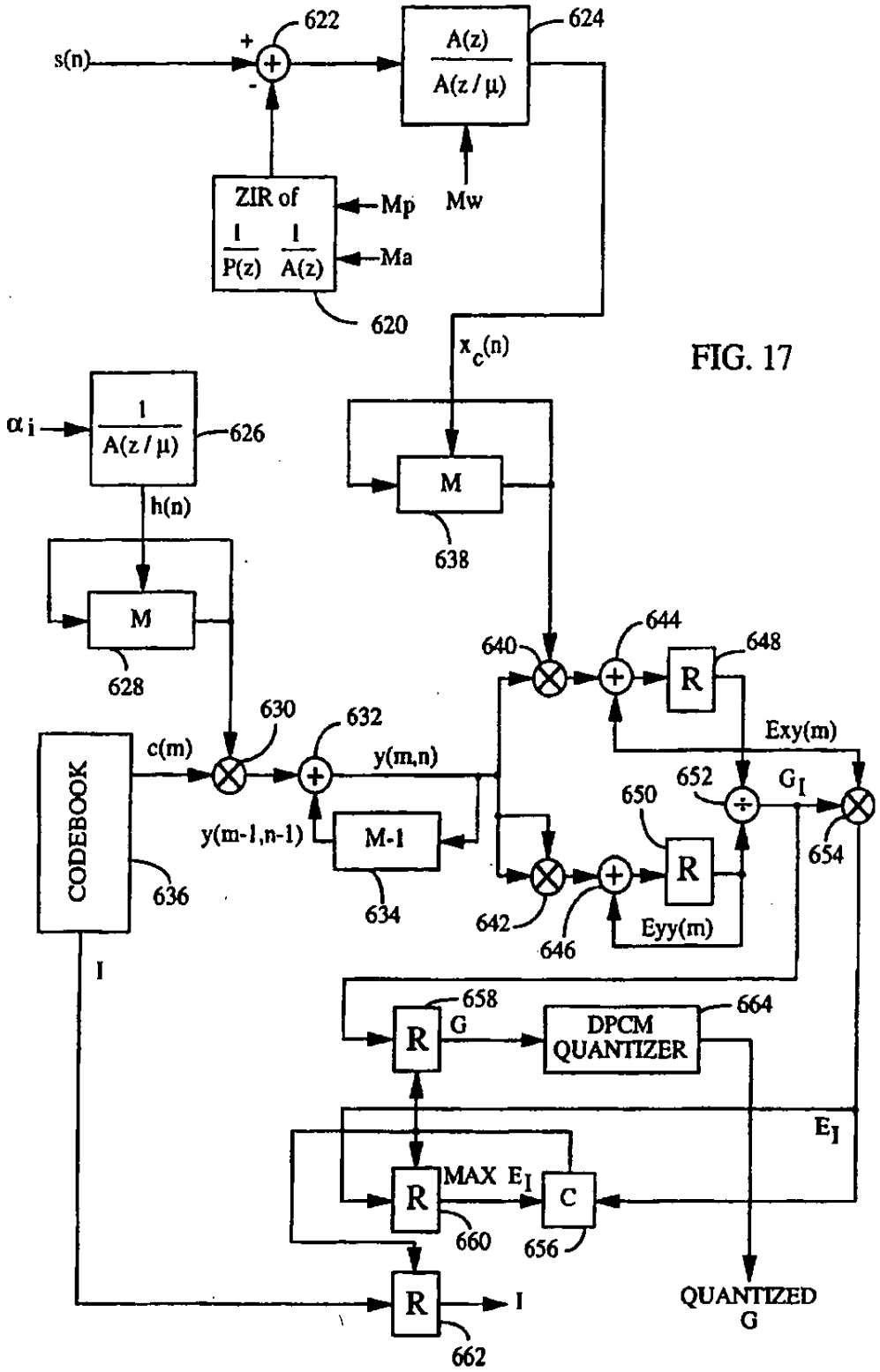
s(n)
+
-
622
A(z)
A(z/μ)
624
ZIR of
1/P(z)
1/A(z)
Mp
Ma
Mw
620
$x_c(n)$
α_i
1
A(z/μ)
626
h(n)
M
638
M
628
640
644
R
648
Exy(m)
630
632
c(m)
y(m,n)
652
650
G_I
654
y(m-1,n-1)
M-1
634
CODEBOOK
636
642
646
Eyy(m)
I
658
G
R
DPCM QUANTIZER
664
E_I
MAX E_I
C
660
656
R
I
662
QUANTIZED G

FIG. 17

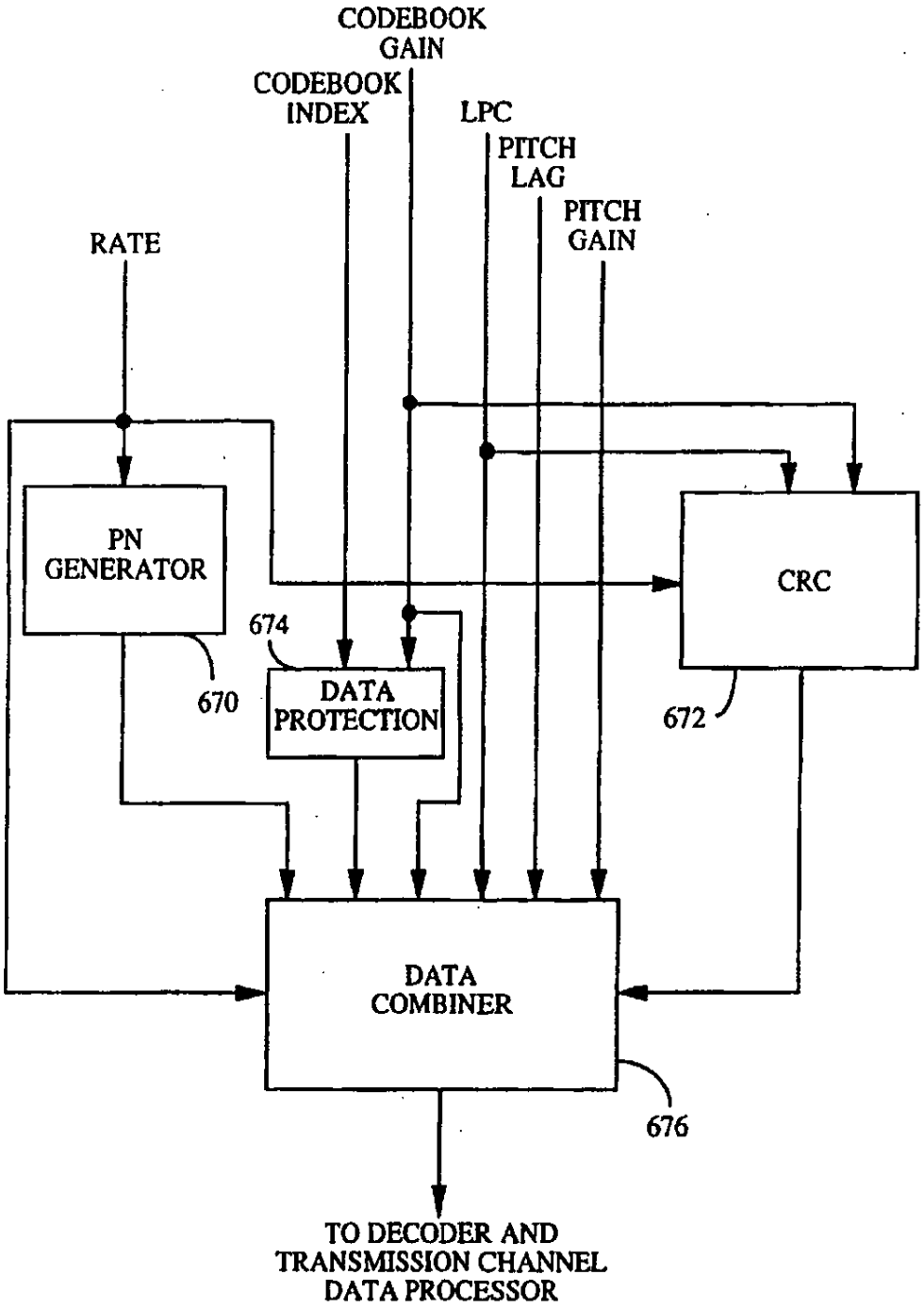
CODEBOOK GAIN
CODEBOOK INDEX
LPC
PITCH LAG
PITCH GAIN
RATE
PN GENERATOR
674
DATA PROTECTION
670
CRC
672
DATA COMBINER
676
TO DECODER AND TRANSMISSION CHANNEL DATA PROCESSOR

FIG. 18

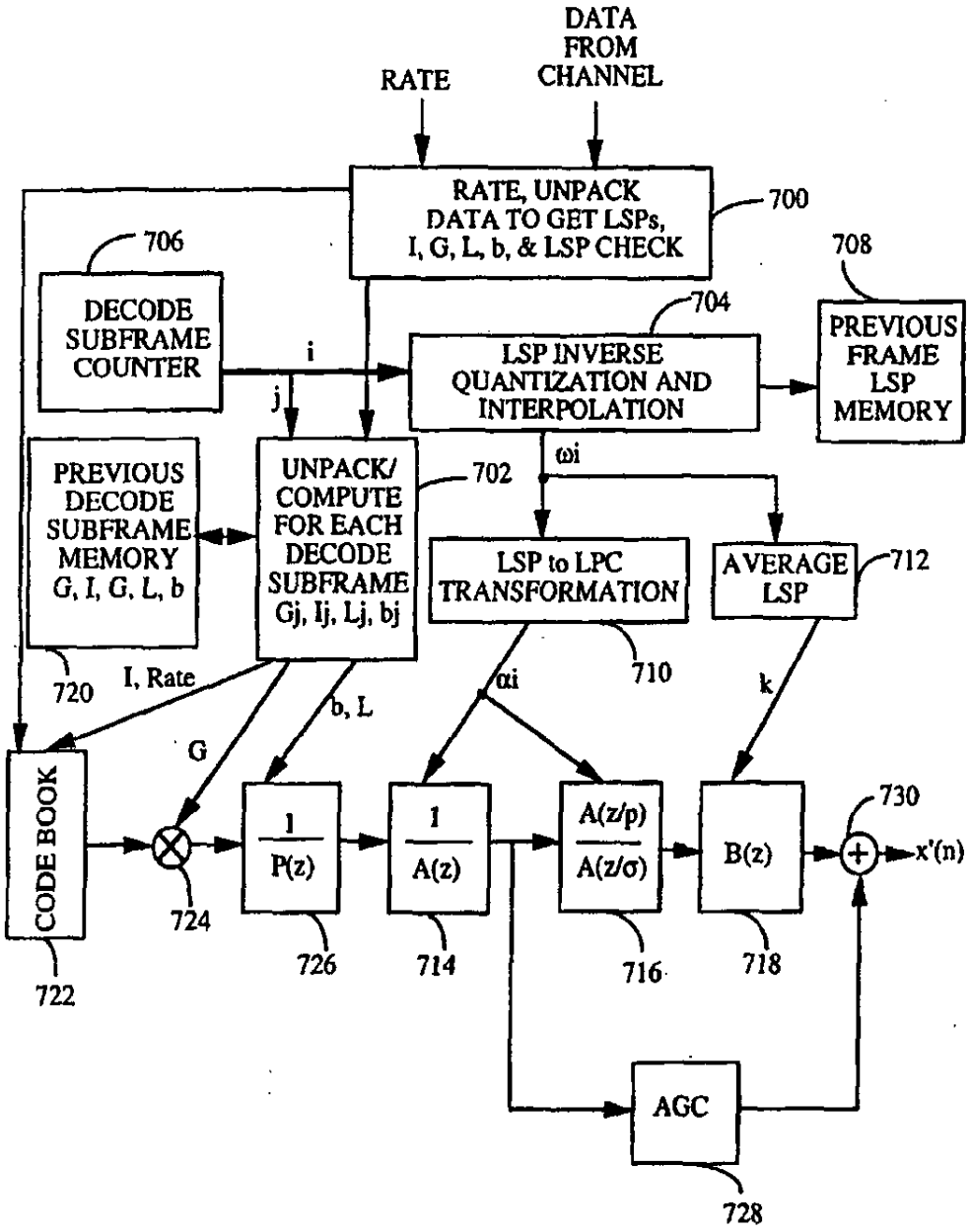
RATE
DATA FROM CHANNEL
RATE, UNPACK DATA TO GET LSPs, I, G, L, b, & LSP CHECK
700
706
DECODE SUBFRAME COUNTER
i
j
704
LSP INVERSE QUANTIZATION AND INTERPOLATION
708
PREVIOUS FRAME LSP MEMORY
PREVIOUS DECODE SUBFRAME MEMORY G, I, G, L, b
UNPACK/ COMPUTE FOR EACH DECODE SUBFRAME Gj, Ij, Lj, bj
702
ωi
LSP to LPC TRANSFORMATION
AVERAGE LSP
712
720
I, Rate
b, L
αi
710
k
G
CODE BOOK
1/P(z)
1/A(z)
A(z/p)/A(z/σ)
B(z)
730
x'(n)
724
722
726
714
716
718
AGC
728

FIG. 19

RECEIVED PARAMETERS FOR FULL RATE FRAME	DECODE SUBFRAME PARAMETERS USED			
	SUBFRAME NO. 1	SUBFRAME NO. 2	SUBFRAME NO. 3	SUBFRAME NO. 4
$I_1, \ldots I_8$	I_1, I_2	I_3, I_4	I_5, I_6	I_7, I_8
$G_1, \ldots G_8$	G_1, G_2	G_3, G_4	G_5, G_6	G_7, G_8
$L_1, \ldots L_4$	L_1	L_2	L_3	L_4
$b_1, \ldots b_4$	b_1	b_2	b_3	b_4
$\omega_{1,f}, \ldots \omega_{10,f}$	$\omega_i=0.75\omega_{i,f-1}+0.25\omega_{i,f}$	$\omega_i=0.5\omega_{i,f-1}+0.5\omega_{i,f}$	$\omega_i=0.25\omega_{i,f-1}+0.75\omega_i$	$\omega_{1}=\omega_{i,f}$

FIG. 20a

RECEIVED PARAMETERS FOR HALF RATE FRAME	DECODE SUBFRAME PARAMETERS USED			
	SUBFRAME NO. 1	SUBFRAME NO. 2	SUBFRAME NO. 3	SUBFRAME NO. 4
$I_1, \ldots I_4$	I_1, I_1-20	I_2, I_2-20	I_3, I_3-20	I_4, I_4-20
$G_1, \ldots G_4$	G_1, G_1	G_2, G_2	G_3, G_3	G_4, G_4
L_1, L_2	L_1	L_1	L_2	L_2
b_1, b_2	b_1	b_1	b_2	b_2
$\omega_{1,f}, \ldots \omega_{10,f}$	$\omega_i=0.75\omega_{i,f-1}+0.25\omega_{i,f}$	$\omega_i=0.5\omega_{i,f-1}+0.5\omega_{i,f}$	$\omega_i=0.25\omega_{i,f-1}+0.75\omega_{i,f}$	$\omega_i=\omega_{i,f}$

FIG. 20b

RECEIVED PARAMETERS FOR QUARTER RATE FRAME	DECODE SUBFRAME PARAMETERS USED			
	SUBFRAME NO. 1	SUBFRAME NO. 2	SUBFRAME NO. 3	SUBFRAME NO. 4
I_1, I_2	I_1, I_1-20	I_1-40, I_1-60	I_2, I_2-20	I_2-40, I_2-60
G_1, G_2	G_1, G_1	G_1, G_1	G_2, G_2	G_2, G_2
L_1	L_1	L_1	L_1	L_1
b_1	b_1	b_1	b_1	b_1
$\omega_{1,f}, \ldots \omega_{8,f}$	$\omega_i=0.625\omega_{i,f-1}+0.375\omega_{i,f}$	$\omega_i=0.625\omega_{i,f-1}+0.375\omega_{i,f}$	$\omega_i=0.125\omega_{i,f-1}+0.875\omega_{i,f}$	$\omega_i=0.125\omega_{i,f-1}+0.875\omega_{i,f}$

FIG. 20c

RECEIVED PARAMETERS FOR FULL RATE FRAME	DECODE SUBFRAME PARAMETERS USED			
	SUBFRAME NO. 1	SUBFRAME NO. 2	SUBFRAME NO. 3	SUBFRAME NO. 4
I_1 (NONE)	PN SEED	PN SEED	PN SEED	PN SEED
G_1	G_1, G_1	G_1, G_1	G_1, G_1	G_1, G_1
L (NONE)	NONE	NONE	NONE	NONE
b (NONE)	0	0	0	0
$\omega_{1,f}, \ldots \omega_{5,f}$	$\omega_i=0.625\omega_{i,f-1}+0.375\omega_{i,f}$	$\omega_i=0.625\omega_{i,f-1}+0.375\omega_{i,f}$	$\omega_i=0.625\omega_{i,f-1}+0.375\omega_{i,f}$	$\omega_i=0.625\omega_{i,f-1}+0.375\omega_{i,f}$

FIG. 20d

RECEIVED PARAMETERS FOR BLANK FRAME	DECODE SUBFRAME PARAMETERS USED			
	SUBFRAME NO. 1	SUBFRAME NO. 2	SUBFRAME NO. 3	SUBFRAME NO. 4
I (NONE)	NONE	NONE	NONE	NONE
G (NONE)	0	0	0	0
L (NONE)	L_p	L_p	L_p	L_p
b (NONE)	b_p	b_p	b_p	b_p
$\omega_{i,f}$ (NONE)	$\omega_i=\omega_{i,f-1}$	$\omega_i=\omega_{i,f-1}$	$\omega_i=\omega_{i,f-1}$	$\omega_i=\omega_{i,f-1}$

NOTE: L_p AND b_p ARE SET TO L AND b VALUES OF PREVIOUS DECODING SUBFRAME WHERE b_p IS SET TO 1 IF $b_p>1$.

FIG. 21a

RECEIVED PARAMETERS FOR ERASURE FRAME	DECODE SUBFRAME PARAMETERS USED			
	SUBFRAME NO. 1	SUBFRAME NO. 2	SUBFRAME NO. 3	SUBFRAME NO. 4
I (NONE)	I_p+89, I_p+109	I_p+129, I_p+149	I_p+169, I_p+189	I_p+209, I_p+169
G (NONE)	$0.7G_p$, $0.7G_p$	$0.7G_p$, $0.7G_p$	$0.7G_p$, $0.7G_p$	$0.7G_p$, $0.7G_p$
L (NONE)	NONE	NONE	NONE	NONE
b (NONE)	0	0	0	0
$\omega_{i,f}$ (NONE)	$\omega_i=0.9(\omega_{i,f-1}-\omega b_i)+\omega b_i$	$\omega_i=0.9(\omega_{i,f-1}-\omega b_i)+\omega b_i$	$\omega_i=0.9(\omega_{i,f-1}-\omega b_i)+\omega b_i$	$\omega_i=0.9(\omega_{i,f-1}-\omega b_i)+\omega b_i$

NOTE: I_p AND G_p ARE THE TO I AND G VALUES OF PREVIOUS DECODING SUBFRAME AND ωb_i IS THE BIAS VALUE OF ω_i.

FIG. 21b

RECEIVED PARAMETERS FOR ERROR FRAME	DECODE SUBFRAME PARAMETERS USED			
	SUBFRAME NO. 1	SUBFRAME NO. 2	SUBFRAME NO. 3	SUBFRAME NO. 4
I_1, I_8	I_1, I_2	I_3, I_4	I_5, I_6	I_7, I_8
G_1, G_8	G_1, G_2	G_3, G_4	G_5, G_6	G_7, G_8
L_1, L_4	NONE	NONE	NONE	NONE
b_1, b_4	0	0	0	0
$\omega_{1,f}, \ldots \omega_{8,f}$	$\omega_i=0.75\omega_{i,f-1}+0.25\omega_{i,f}$	$\omega_i=0.5\omega_{i,f-1}+0.5\omega_{i,f}$	$\omega_i=0.25\omega_{i,f-1}+0.75\omega_{i,f}$	$\omega_i=\omega_{i,f}$

FIG. 21c

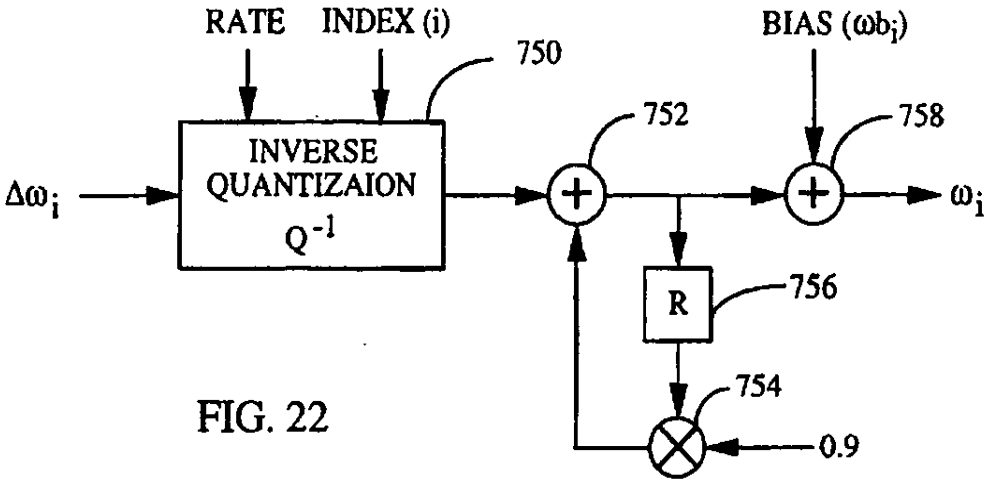
RATE
INDEX (i)
750
BIAS (ωb_i)
752
758
INVERSE QUANTIZAION
Q^{-1}
$\Delta\omega_i$
ω_i
R
756
754
0.9

FIG. 22

FIG. 24

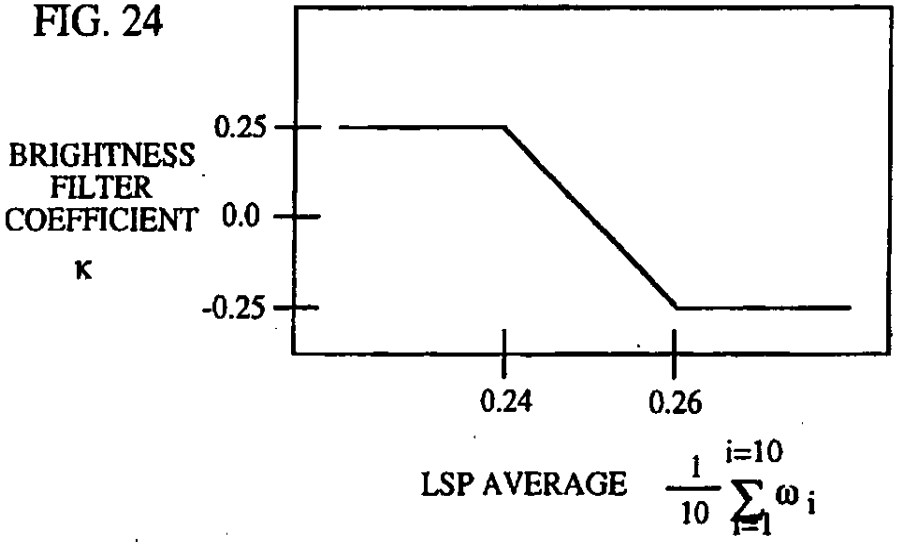
BRIGHTNESS FILTER COEFFICIENT
κ
0.25
0.0
-0.25
0.24
0.26
LSP AVERAGE $\frac{1}{10}\sum_{i=1}^{i=10}\omega_i$

FIG. 23

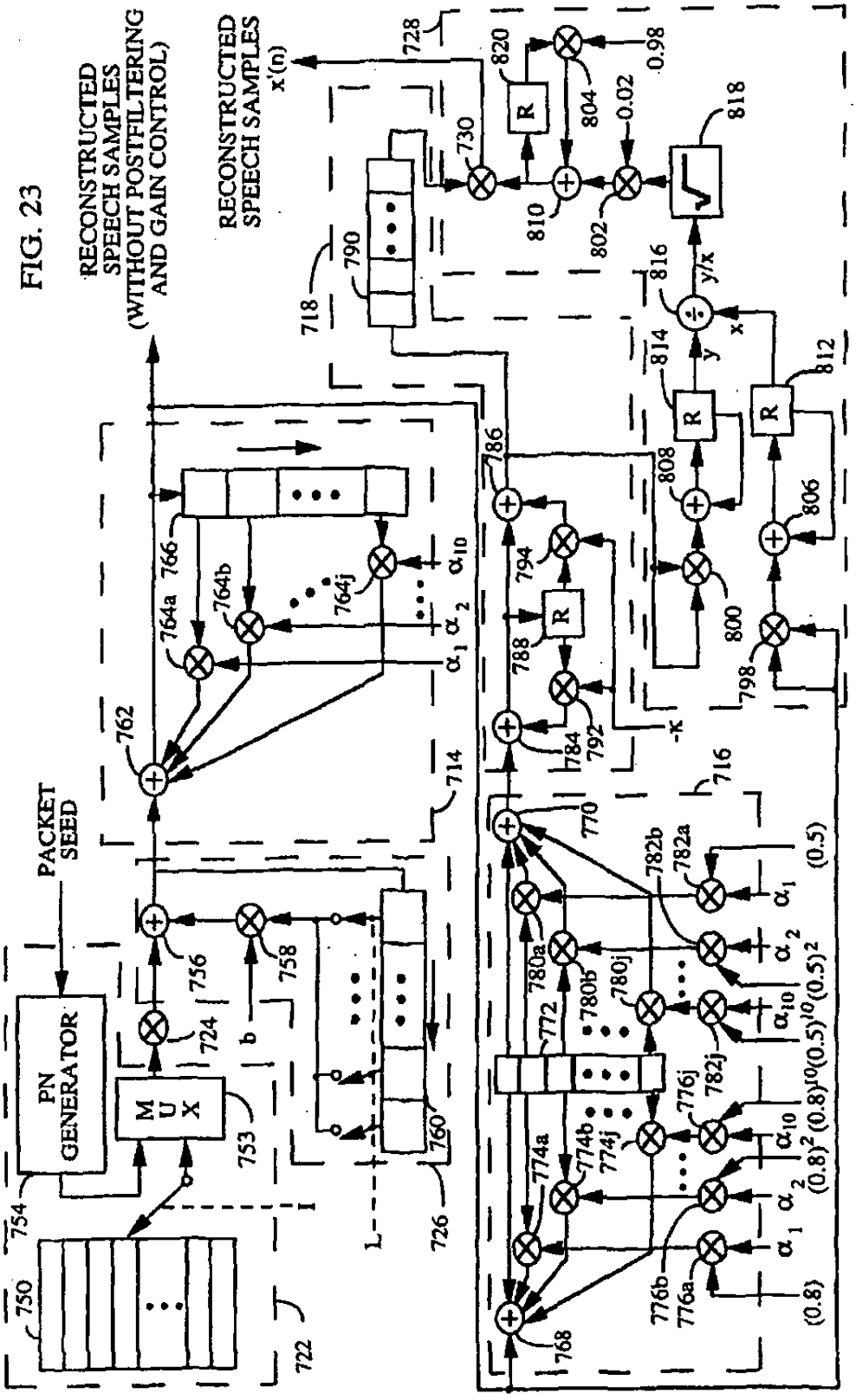
RECONSTRUCTED SPEECH SAMPLES (WITHOUT POSTFILTERING AND GAIN CONTROL)
RECONSTRUCTED SPEECH SAMPLES x'(n)
PACKET SEED
PN GENERATOR
MUX
R
y/x
x
y
-κ
b
L
(0.5)
(0.8)
(0.8)²
(0.8)¹⁰
(0.5)¹⁰
(0.5)²
0.98
0.02
α₁
α₂
α₁₀
750
754
753
756
758
724
760
726
722
762
764a
764b
764j
766
714
718
790
728
730
820
804
810
802
818
816
814
812
808
806
800
798
786
794
788
784
792
716
770
772
768
774a
774b
774j
776a
776b
776j
780a
780b
780j
782a
782b
782j

VARIABLE RATE VOCODER

This is a divisional of application Ser. No. 08/363,170, filed Dec. 23, 1994, now U.S. Pat. No. 5,657,420, issued Aug. 12, 1997, which is a divisional of application Ser. No. 08/004,484, filed Jan. 14, 1993, now U.S. Pat. No. 5,414,796, issued May 9, 1995, which is a continuation of application Ser. No. 07/713,661, filed Jun. 11, 1991, now abandoned.

BACKGROUND OF THE INVENTION

I. Field of the Invention

The present invention relates to speech processing. Specifically, the present invention relates to a novel and improved method and system for compressing speech wherein the amount of compression dynamically varies while minimally impacting the quality of the reconstructed speech. Furthermore, since the compressed speech data is intended to be sent over a channel which may introduce errors, the method and system of the present invention also minimizes the impact of channel errors on voice quality.

II. Description of the Related Art

Transmission of voice by digital techniques has become widespread, particularly in long distance and digital radio telephone applications. This, in turn, has created interest in determining the least amount of information which can be sent over the channel which maintains the perceived quality of the reconstructed speech. If speech is transmitted by simply sampling and digitizing, a data rate on the order of 64 kilobits per second (kbps) is required to achieve a speech quality of conventional analog telephone. However, through the use of speech analysis, followed by the appropriate coding, transmission, and resynthesis at the receiver, a significant reduction in the data rate can be achieved.

Devices which employ techniques to compress voiced speech by extracting parameters that relate to a model of human speech generation are typically called vocoders. Such devices are composed of an encoder, which analyzes the incoming speech to extract the relevant parameters, and a decoder, which resynthesizes the speech using the parameters which it receives over the transmission channel. In order to be accurate, the model must be constantly changing. Thus the speech is divided into blocks of time, or analysis frames, during which the parameters are calculated. The parameters are then updated for each new frame.

Of the various classes of speech coders the Code Excited Linear Predictive Coding (CELP), Stochastic Coding or Vector Excited Speech Coding are of one class. An example of a coding algorithm of this particular class is described in the paper "A 4.8 kbps Code Excited Linear Predictive Coder" by Thomas E. Tremain et al., *Proceedings of the Mobile Satellite Conference*, 1988.

The function of the vocoder is to compress the digitized speech signal into a low bit rate signal by removing all of the natural redundancies inherent in speech. Speech typically has short term redundancies due primarily to the filtering operation of the vocal tract, and long term redundancies due to the excitation of the vocal tract by the vocal cords. In a CELP coder, these operations are modelled by two filters, a short term formant filter and a long term pitch filter. Once these redundancies are removed, the resulting residual signal can be modelled as white gaussian noise, which also must be encoded. The basis of this technique is to compute the parameters of a filter, called the LPC filter, which performs short-term prediction of the speech waveform using a model of the human vocal tract. In addition, long-term effects, related to the pitch of the speech, are modeled by computing the parameters of a pitch filter, which essentially models the human vocal chords. Finally, these filters must be excited, and this is done by determining which one of a number of random excitation waveforms in a codebook results in the closest approximation to the original speech when the waveform excites the two filters mentioned above. Thus the transmitted parameters relate to three items (1) the LPC filter, (2) the pitch filter and (3) the codebook excitation.

Although the use of vocoding techniques further the objective in attempting to reduce the amount of information sent over the channel while maintaining quality reconstructed speech, other techniques need be employed to achieve further reduction. One technique previously used to reduce the amount of information sent is voice activity gating. In this technique no information is transmitted during pauses in speech. Although this technique achieves the desired result of data reduction, it suffers from several deficiencies.

In many cases, the quality of speech is reduced due to clipping of the initial parts of word. Another problem with gating the channel off during inactivity is that the system users perceive the lack of the background noise which normally accompanies speech and rate the quality of the channel as lower than a normal telephone call. A further problem with activity gating is that occasional sudden noises in the background may trigger the transmitter when no speech occurs, resulting in annoying bursts of noise at the receiver.

In an attempt to improve the quality of the synthesized speech in voice activity gating systems, synthesized comfort noise is added during the decoding process. Although some improvement in quality is achieved from adding comfort noise, it does not substantially improve the overall quality since the comfort noise does not model the actual background noise at the encoder.

A more preferred technique to accomplish data compression, so as to result in a reduction of information that needs to be be sent, is to perform variable rate vocoding. Since speech inherently contains periods of silence, i.e. pauses, the amount of data required to represent these periods can be reduced. Variable rate vocoding most effectively exploits this fact by reducing the data rate for these periods of silence. A reduction in the data rate, as opposed to a complete halt in data transmission, for periods of silence overcomes the problems associated with voice activity gating while facilitating a reduction in transmitted information.

It is therefore an object of the present invention to provide a novel and improved method and system for compressing speech using a variable rate vocoding technique.

SUMMARY OF THE INVENTION

The present invention implements a vocoding algorithm of the previously mentioned class of speech coders, Code Excited Linear Predictive Coding (CELP), Stochastic Coding or Vector Excited Speech Coding. The CELP technique by itself does provide a significant reduction in the amount of data necessary to represent speech in a manner that upon resynthesis results in high quality speech. As mentioned previously the vocoder parameters are updated for each frame. The vocoder of the present invention provides a variable output data rate by changing the frequency and precision of the model parameters.

The present invention differs most markedly from the basic CELP technique by producing a variable output data rate based on speech activity. The structure is defined so that

the parameters are updated less often, or with less precision, during pauses in speech. This technique allows for an even greater decrease in the amount of information to be transmitted. The phenomenon which is exploited to reduce the data rate is the voice activity factor, which is the average percentage of time a given speaker is actually talking during a conversation. For typical two-way telephone conversations, the average data rate is reduced by a factor of 2 or more. During pauses in speech, only background noise is being coded by the vocoder. At these times, some of the parameters relating to the human vocal tract model need not be transmitted.

As mentioned previously a prior approach to limiting the amount of information transmitted during silence is called voice activity gating, a technique in which no information is transmitted during moments of silence. On the receiving side the period may be filled in with synthesized "comfort noise". In contrast, a variable rate vocoder is continuously transmitting data which in the preferred embodiment is at rates which range between approximately 8 kbps and 1 kbps. A vocoder which provides a continuous transmission of data eliminates the need for synthesized "comfort noise", with the coding of the background noise providing a more natural quality to the resynthesized speech. The present invention therefore provides a significant improvement in resynthesized speech quality over that of voice activity gating by allowing a smooth transition between speech and background.

The present invention further incorporates a novel technique for masking the occurrence of errors. Because the data is intended for transmission over a channel that may be noisy, a radio link for example, it must accommodate errors in the data. Previous techniques using channel coding to reduce the number of errors encountered can provide some success in reducing errors. However, channel coding alone does not fully provide the level of errors protection necessary to ensure high quality in the reconstructed speech. In the variable rate vocoder where vocoding is occurring continuously, an error may destroy data relating to some interesting speech event, such as the start of a word or a syllable. A typical problem with linear prediction coding (LPC) based vocoders, is that errors in the parameters relating to the vocal tract model will cause sounds which are vaguely human-like, and which may change the sound of the original word enough to confuse the listener. In the present invention, errors are masked to decrease their perceptibility to the listener. Error masking thus as implemented in the present invention provides a drastic decrease in the affect of errors on speech intelligibility.

Because the maximum amount that any parameter can change is limited to smaller ranges at low rates, errors in the parameters transmitted at these rates will affect speech quality less. Since errors in the different rates have different perceived effects on speech quality, the transmission system can be optimized to give more protection to the higher rate data. Therefore as an added feature, the present invention provides a robustness to channel errors.

The present invention in implementing a variable rate output version of the CELP algorithm results in speech compression which dynamically varies from 8:1 to 64:1 depending on the voice activity. The just mentioned compression factors are cited with reference to a μlaw input, with the compression factors higher by a factor of 2 for a linear input. Rate determination is made on a frame by frame basis so as to take full advantage of the voice activity factor. Even though less data is produced for pauses in speech, the perceived degradation of the resynthesized background noise is minimized. Using the techniques of the present invention, near-toll quality speech can be achieved at a maximum data rate of 8 kbps and an average data rate on the order of 3.5 kbps in normal conversation.

Since the present invention enables short pauses in speech to be detected, a decrease in the effective voice activity factor is realized. Rate decisions can be made on a frame by frame basis with no hangover, so the data rate may be lowered for pauses in speech as short as the frame duration, typically 20 msec. in the preferred embodiment. Therefore pauses such as those between syllables may be captured. This technique decreases the voice activity factor beyond what has traditionally been considered, as not only long duration pauses between phrases, but also shorter pauses can be encoded at lower rates.

Since rate decisions are made on a frame basis, there is no clipping of the initial part of the word, such as in a voice activity gating system. Clipping of this nature occurs in voice activity gating system due to a delay between detection of the speech and a restart in transmission of data. Use of a rate decision based upon each frame results in speech where all transitions have a natural sound.

With the vocoder always transmitting, the speaker's ambient background noise will continually be heard on the receiving end thereby yielding a more natural sound during speech pauses. The present invention thus provides a smooth transition to background noise. What the listener hears in the background during speech will not suddenly change to a synthesized comfort noise during pauses as in a voice activity gating system.

Since background noise is continually vocoded for transmission, interesting events in the background can be sent with full clarity. In certain cases the interesting background noise may even be coded at the highest rate. Maximum rate coding may occur, for example, when there is someone talking loudly in the background, or if an ambulance drives by a user standing on a street corner. Constant or slowly varying background noise will, however, be encoded at low rates.

The use of variable rate vocoding has the promise of increasing the capacity of a Code Division Multiple Access (CDMA) based digital cellular telephone system by more than a factor of two. CDMA and variable rate vocoding are uniquely matched, since, with CDMA, the interference between channels drops automatically as the rate of data transmission over any channel decreases. In contrast, consider systems in which transmission slots are assigned, such as TDMA or FDMA. In order for such a system to take advantage of any drop in the rate of data transmission, external intervention is required to coordinate the reassignment of unused slots to other users. The inherent delay in such a scheme implies that the channel may be reassigned only during long speech pauses. Therefore, full advantage cannot be taken of the voice activity factor. However, with external coordination, variable rate vocoding is useful in systems other than CDMA because of the other mentioned reasons.

In a CDMA system speech quality can be slightly degraded at times when extra system capacity is desired. Abstractly speaking, the vocoder can be thought of as multiple vocoders all operating at different rates with different resultant speech qualities. Therefore the speech qualities can be mixed in order to further reduce the average rate of data transmission. Initial experiments show that by mixing full and half rate vocoded speech, e.g. the maximum allowable data rate is varied on a frame by frame basis

between 8 kbps and 4 kbps, the resulting speech has a quality which is better than half rate variable, 4 kbps maximum, but not as good as full rate variable, 8 kbps maximum.

It is well known that in most telephone conversations, only one person talks at a time. As an additional function for full-duplex telephone links a rate interlock may be provided. If one direction of the link is transmitting at the highest transmission rate, then the other direction of the link is forced to transmit at the lowest rate. An interlock between the two directions of the link can guarantee no greater than 50% average utilization of each direction of the link. However, when the channel is gated off, such as the case for a rate interlock in activity gating, there is no way for a listener to interrupt the talker to take over the talker role in the conversation. The present invention readily provides the capability of a rate interlock by control signals which set the vocoding rate.

Finally, it should be noted that by using a variable rate vocoding scheme, signalling information can share the channel with speech data with a very minimal impact on speech quality. For example, a high rate frame may be split into two pieces, half for sending the lower rate voice data and the other half for the signalling data. In the vocoder of the preferred embodiment only a slight degradation in speech quality between full and half rate vocoded speech is realized. Therefore, the vocoding of speech at the lower rate for shared transmission with other data results in an almost imperceptible difference in speech quality to the user.

BRIEF DESCRIPTION OF THE DRAWINGS

The features, objects, and advantages of the present invention will become more apparent from the detailed description set forth below when taken in conjunction with the drawings in which like reference characters identify correspondingly throughout and wherein:

FIGS. 1*a*–1*e* illustrates in graphical form the vocoder analysis frames and subframes for various rates;

FIGS. 2*a*–2*d* are a series of charts illustrating the vocoder output bit distribution for various rates;

FIG. 3 is a generalized block diagram of an exemplary encoder;

FIG. 4 is an encoder flow chart;

FIG. 5 is a generalized block diagram of an exemplary decoder;

FIG. 6 is a decoder flow chart;

FIG. 7 is a more detailed functional block diagram of the encoder;

FIG. 8 is a block diagram of an exemplary Hamming window and autocorrelation subsystems;

FIG. 9 is a is a block diagram of an exemplary rate determination subsystem;

FIG. 10 is a block diagram of an exemplary LPC analysis subsystem;

FIG. 11 is a block diagram of an exemplary LPC to LSP transformation subsystem;

FIG. 12 is a block diagram of an exemplary LPC quantization subsystem;

FIG. 13 is a block diagram of exemplary LSP interpolation and LSP to LPC transformation subsystems;

FIG. 14 is a block diagram of the adaptive codebook for the pitch search;

FIG. 15 is a block diagram of the encoder's decoder;

FIG. 16 is a block diagram of the pitch search subsystem;

FIG. 17 is a block diagram of the codebook search subsystem;

FIG. 18 is a block diagram of the data packing subsystem;

FIG. 19 is a more detailed functional block diagram of the decoder;

FIGS. 20*a*–20*d* are charts illustrating the decoder received parameters and subframe decoding data for various rates;

FIGS. 21*a*–21*c* are charts further illustrating the decoder received parameters and subframe decoding data for special conditions;

FIG. 22 is a block diagram of the LSP inverse quantization subsystem;

FIG. 23 is a block diagram in greater detail of the decoder with postfiltering and automatic gain control; and

FIG. 24 is a chart illustrating the adaptive brightness filter characteristics.

DETAILED DESCRIPTION OF THE PREFERRED EMBODIMENT

In accordance with the present invention, sounds such as speech and/or background noise are sampled and digitized using well known techniques. For example the analog signal may be converted to a digital format by the standard 8 bit/μlaw format followed by a μlaw/uniform code conversion. In the alternative, the analog signal may be directly converted to digital form in a uniform pulse code modulation (PCM) format. Each sample in the preferred embodiment is thus represented by one 16 bit word of data. The samples are organized into frames of input data wherein each frame is comprised of a predetermined number of samples. In the exemplary embodiment disclosed herein an 8 kHz sampling rate is considered. Each frame is comprised of 160 samples or of 20 msec. of speech at the 8 kHz sampling rate. It should be understood that other sampling rates and frame sizes may be used.

The field of vocoding includes many different techniques for speech coding, one of which is the CELP coding technique. A summary of the CELP coding technique is described in the previously mentioned paper "A 4.8 kbps Code Excited Linear Predictive Coder". The present invention implements a form of the CELP coding techniques so as to provide a variable rate in coded speech data wherein the LPC analysis is performed upon a constant number of samples, and the pitch and codebook searches are performed on varying numbers of samples depending upon the transmission rate. In concept the CELP coding techniques as applied to the present invention are discussed with reference to FIGS. 3 and 5.

In the preferred embodiment of the present invention, the speech analysis frames are 20 msec. in length, implying that the extracted parameters are transmitted in a burst 50 times per second. Furthermore the rate of data transmission is varied from roughly 8 kbps to 4 kbps to 2 kbps, and to 1 kbps. At full rate (also referred to as rate 1), data transmission is at an 8.55 kbps rate with the parameters encoded for each frame using 171 bits including an 11 bit internal CRC (Cyclic Redundancy Check). Absent the CRC bits the rate would be 8 kbps. At half rate (also referred to as rate ½), data transmission is at a 4 kbps rate with the parameters encoded for each frame using 80 bits. At quarter rate (also referred to as rate ¼), data transmission is at a 2 kbps rate with the parameters encoded for each frame using 40 bits. At eighth rate (also referred to as rate ⅛), data transmission is slightly less than a 1 kbps rate with the parameters encoded for each frame using 16 bits.

FIG. 1 graphically illustrates an exemplary analysis frame of speech data 10 and the relationship of a Hamming window 12 used in LPC analysis. LPC analysis frame, and pitch and codebook subframes for the different rates are illustrated in graphical form in FIGS. 2*a*–2*d*. It should be understood that the LPC analysis frame for all rates is the same size.

Referring now to the drawings, and in particular FIG. 1*a*, LPC analysis is accomplished using the 160 speech data samples of frame 10 which are windowed using Hamming window 12. As illustrated in FIG. 1*a*, the samples, s(n) are numbered 0–159 within each frame. Hamming window 12 is positioned such that it is offset within frame 10 by 60 samples. Thus Hamming window 12 starts at the 60th sample, s(59), of the current data frame 10 and continues through and inclusive of the 59th sample, s(58), of a following data frame 14. The weighted data generated for a current frame, frame 10, therefore also contains data that is based on data from the next frame, frame 14.

Depending upon the data transmission rate, searches are performed to compute the pitch filter and codebook excitation parameters multiple times on different subframes of data frame 10 as shown in FIGS. 1*b*–1*e*. It should be *understood that in the preferred embodiment that only one* rate is selected for frame 10 such that the pitch and codebook searches are done in various size subframes corresponding to the selected rate as described below. However for purposes of illustration, the subframe structure of the pitch and codebook searches for the various allowed rates of the preferred embodiment for frame 10 are shown in FIGS. 1*b*–1*e*.

At all rates, there is one LPC computation per frame 10 as illustrated in FIG. 1*a*. As illustrated in FIG. 1*b*, at full rate there are two codebook subframes 18 for each pitch subframe 16. At full rate there are four pitch updates, one for each of the *four pitch subframes* 16, each 40 samples long (5 msec.). Furthermore at full rate there are eight codebook updates, one for each of the eight codebook subframes 18, each 20 samples long (2.5 msec.).

At half rate, as illustrated in FIG. 1*c*, there are two codebook subframes 22 for each pitch subframe 20. Pitch is updated twice, once for each of the two pitch frames 20 while the codebook is updated four times, once for each of the four codebook subframe 22. At quarter rate, as illustrated in FIG. 1*d*, there are two codebook subframes 26 for the single pitch subframe 20. Pitch is updated once for pitch subframe 24 while the codebook twice, once for each of the two codebook subframe 26. As illustrated in FIG. 1*e*, at eighth rate, pitch is not determined and the codebook is updated only once in frame 28 which corresponds to frame 10.

Additionally, although the LPC coefficients are computed only once per frame, they are linearly interpolated, in a Line Spectral Pair (LSP) representation, up to four times using the resultant LSP frequencies from the previous frame to approximate the results of LPC analysis with the Hamming window centered on each subframe. The exception is that at full rate, the LPC coefficients are not interpolated for the codebook subframes. Further details on the LSP frequency computation is described later herein.

In addition to performing the pitch and codebook searches less often at lower rates, less bits are also allocated for the transmission of the LPC coefficients. The number of bits allocated at the various rates is shown in FIGS. 2*a*–2*d*. Each one of FIGS. 2*a*–2*d* represents the number of vocoder encoded data bits allocated to each 160 sample frame of speech. In FIGS. 2*a*–2*d*, the number in the respective LPC block 30*a*–30*d* is the number of bits used at the corresponding rate to encode the short term LPC coefficients. In the preferred embodiment the number of bits used to encode the LPC coefficients at full, half, quarter and eighth rates are respectively 40, 20, 10 and 10.

In order to implement variable rate coding, the LPCs are first transformed into Line Spectrum Pairs (LSP) and the resulting LSP frequencies are individually encoded using DPCM coders. The LPC order is 10, such that there are 10 LSP frequencies and 10 independent DPCM coders. The bit allocation for the DPCM coders is according to Table I

TABLE I

	DPCM CODER NUMBER									
	1	2	3	4	5	6	7	8	9	10
RATE 1	4	4	4	4	4	4	4	4	4	4
RATE ½	2	2	2	2	2	2	2	2	2	2
RATE ¼	1	1	1	1	1	1	1	1	1	1
RATE ⅛	1	1	1	1	1	1	1	1	1	1

Both at the encoder and the decoder the LSP frequencies are converted back to LPC filter coefficients before for use in the pitch and codebook searches.

With respect to the pitch search, at full rate as illustrated in FIG. 2*a*, the pitch update is computed four times, once for each quarter of the speech frame. For each pitch update at the full rate, 10 bits are used to encode the new pitch parameters. Pitch updates are done a varying numbers of times for the other rates as shown in FIGS. 2*b*–2*d*. As the rate decreases the number of pitch updates also decreases. FIGS. 2*b* illustrates the pitch updates for half rate which are computed twice, once for each half of the speech frame. Similarly FIG. 2*c* illustrates the pitch updates for quarter rate which is computed once every full speech frame. As was for *full rate, 10 bits are used to encode the new pitch parameters* for each half and quarter rate pitch update. However for eighth rate, as illustrated in FIG. 2*d*, no pitch update is computed since this rate is used to encode frames when little or no speech is present and pitch redundancies do not exist.

For each 10 bit pitch update, 7 bits represent the pitch lag and 3 bits represent the pitch gain. The pitch lag is limited to be between 17 and 143. The pitch gain is linearly quantized to between 0 and 2 for representation by the 3 bit value.

With respect to the codebook search, at full rate as illustrated in FIG. 2*a*, the codebook update is computed *eight times, once for each eighth of the speech frame. For* each codebook update at the full rate, 10 bits are used to encode the new codebook parameters. Codebook updates are done a varying number of times in the other rates as shown in FIGS. 2*b*–2*d*. However, as the rate decreases the number of codebook updates also decreases. FIGS. 2*b* illustrates the codebook updates for half rate which is computed four times, once for each quarter of the speech frame. FIG. 2*c* illustrates the codebook updates for quarter rate which is computed twice, once for each half of the speech frame. As was for full rate, 10 bits are used to encode the new codebook parameters for each half and quarter rate pitch update. Finally, FIG. 2*d* illustrates the codebook updates for eighth rate which is computed once every full speech frame. It should be noted that at eighth rate 6 are transmitted, 2 bits representative of the codebook gain while the other 4 bits are random bits. Further discussion on the bit allocations for the codebook updates are described in further detail below.

The bits allocated for the codebook updates represent the data bits needed to vector quantize the pitch prediction residual. For full, half and quarter rates, each codebook update is comprised of 7 bits of codebook index plus 3 bits of codebook gain for a total of 10 bits. The codebook gain is encoded using a differential pulse code modulation (DPCM) coder operating in the log domain. Although a similar bit arrangement can be used for eighth rate, an alternate scheme is preferred. At eighth rate codebook gain is represented by 2 bits while 4 randomly generated bits are used with the received data as a seed to a pseudorandom number generator which replaces the codebook.

Referring to the encoder block diagram illustrated in FIG. 3, the LPC analysis is done in an open-loop mode. From each frame of input speech samples s(n) the LPC coefficients (α_1–α_{10}) are computed, as described later, by LPC analysis/quantization 50 for use in formant synthesis filter 60.

The computation of the pitch search, however, is done in a closed-loop mode, often referred to as an analysis-by-synthesis method. However, in the exemplary implementation a novel hybrid closed-loop/open-loop technique is used in conducting the pitch search. In the pitch search encoding is performed by selecting parameters which minimize the mean square error between the input speech and the synthesized speech. For purposes of simplification in this portion of the discussion the issue of rate is not considered. However further discussion on the effect of the selected rate on pitch and codebook searches is discussed in more detail later herein.

In the conceptual embodiment illustrated in FIG. 3, perceptual weighting filter 52 is characterized by the following equations:

$$W(z)=\frac{A(z)}{A(z/\mu)} \quad (1)$$

where

$$A(z)=1-\sum_{i=1}^{10}\alpha_i z^{-i} \quad (2)$$

is the formant prediction filter and μ is a perceptual weighting parameter, which in the exemplary embodiment μ=0.8. Pitch synthesis filter 58 is characterized by the following equation:

$$\frac{1}{P(z)}=\frac{1}{1-bz^{-L}} \quad (3)$$

Formant synthesis filter 60, a weighted filter as discussed below, is characterized by the following equation:

$$H(z)=\left(\frac{1}{A(z)}\right)W(z)=\frac{1}{A(z/\mu)} \quad (4)$$

The input speech samples s(n) are weighted by perceptual weighting filter 52 so that the weighted speech samples x(n) are provided to a sum input of adder 62. Perceptual weighting is utilized to weight the error at the frequencies where there is less signal power. It is at these low signal power frequencies that the noise is more perceptually noticeable. The synthesized speech samples x'(n) are output from formant synthesis filter 60 to a difference input of adder 62 where subtracted from the x(n) samples. The difference in samples output from adder 62 are input to mean square error (MSE) element 64 where they are squared and then summed. The results of MSE element 64 are provided to minimization element 66 which generates values for pitch lag L, pitch gain b, codebook index I and codebook gain.

In minimization element 66 all possible values for L, the pitch lag parameter in P(z), are input to pitch synthesis filter 58 along with the value c(n) from multiplier 56. During the pitch search there is no contribution from the codebook, i.e. c(n)=0. The values of L and b that minimize the weighted error between the input speech and the synthesized speech are chosen by minimization element 66. Pitch synthesis filter 58 generates and outputs the value p(n) to formant synthesis filter 60. Once the pitch lag L and the pitch gain b for the pitch filter are found, the codebook search is performed in a similar manner.

It should be understood that FIG. 3 is a conceptual representation of the analysis-by-synthesis approach taken in the present invention. In the exemplary implementation of the present invention, the filters are not used in the typical closed loop feedback configuration. In the present invention, the feedback connection is broken during the search and replaced with an open loop formant residual, the details of which are provided later herein.

Minimization element 66 then generates values for codebook index I and codebook gain G. The output values from codebook 54, selected from a plurality of random gaussian vector values according to the codebook index I, are multiplied in multiplier 56 by the codebook gain G to produce the sequence of values c(n) used in pitch synthesis filter 58. The codebook index I and the codebook gain G that minimize the mean square error are chosen for transmission.

It should be noted that perceptual weighting W(z) is applied to both the input speech by perceptual weighting filter 52 and the synthesized speech by the weighting function incorporated within formant synthesis filter 60. Formant synthesis filter 60 is therefore actually a weighted formant synthesis filter, which combines the weighting function of equation 1 with the typical formant prediction filter characteristic

$$\frac{1}{A(z)}$$

to result in the weighted formant synthesis function of equation 3.

It should be understood that in the alternative, perceptual weighting filter 52 may be placed between adder 62 and MSE element 64. In this case formant synthesis filter 60 would have the normal filter characteristic of

$$\frac{1}{A(z)}.$$

FIG. 4 illustrates a flow chart of the steps involved in encoding speech with the encoder of FIG. 3. For purposes of explanation steps involving rate decision are included in the flow chart of FIG. 4. The digitized speech samples are obtained, block 80, from the sampling circuitry from which the LPC coefficients are then calculated, block 82. As part of the LPC coefficient calculation Hamming window and autocorrelation techniques are used. An initial rate decision is made, block 84, for the frame of interest based on frame energy in the preferred embodiment.

In order to efficiently code the LPC coefficients in a small number of bits, the LPC coefficients are transformed into Line Spectrum Pair (LSP) frequencies, block 86, and then quantized, block 88, for transmission. As an option an additional rate determination may be made, block 90, with an increase in the rate being made if the quantization of the LSPs for the initial rate is deemed insufficient, block 92.

For the first pitch subframe of the speech frame under analysis the LSP frequencies are interpolated and transformed to LPC coefficients, block 94, for use in conducting the pitch search. In the pitch search the codebook excitation

is set to zero. In the pitch search, blocks **96** and **98**, which is an analysis by synthesis method as previously discussed, for each possible pitch lag L the synthesized speech is compared with the original speech. For each value of L, an integer value, the optimum pitch gain b is determined. Of the sets of L and b values, the optimal L and b value set provide the minimum perceptually weighted mean square error between the synthesized speech and the original speech. For the determined optimum values of L and b for that pitch subframe, the value b is quantized, block **100**, for transmission along with the corresponding L value. In an alternate implementation of the pitch search, the values b and L may be quantized values as part of the pitch search with these quantized values being used in conducting the pitch search. Therefore, in this implementation the need for quantization of the selected b value after the pitch search, block **100**, is eliminated.

For the first codebook subframe of the speech frame under analysis the LSP frequencies are interpolated and transformed to LPC coefficients, block **102**, for use in conducting the codebook search. In the exemplary embodiment however, at full rate the LSP frequencies are interpolated only down to the pitch subframe level. This interpolation and transformation step is performed for the codebook search in addition to that of the pitch search due to a difference in pitch and codebook subframe sizes for each rate, except for rate ⅛ where the issue is moot since no pitch data is computed. In the codebook search, blocks **104** and **106**, the optimum pitch lag L and pitch gain b values are used in the pitch synthesis filter such that for for each possible codebook index I the synthesized speech is compared with the original speech. For each value of I, an integer value, the optimum codebook gain G is determined. Of the sets of I and G values, the optimal I and G value set provides the minimum error between the synthesized speech and the original speech. For the determined optimum values of I and G for that codebook subframe, the value G is quantized, block **108**, for transmission along with the corresponding I value. Again in an alternate implementation of the codebook search, the value of G may quantized as part of the codebook search with these quantized values being used in conducting the codebook search. In this alternate implementation the need for quantization of the selected G value after the codebook search, block **108**, is eliminated.

After the codebook search a decoder within the encoder is run on the optimal values of I, G, L and b. Running of the encoder's decoder reconstructs the encoder filter memories for use in future subframes.

A check is then made, block **110**, to determine whether the codebook subframe upon which analysis was just completed was the last codebook subframe of the set of codebook subframes corresponding to the pitch subframe for which the pitch search was conducted. In other words a determination is made as to whether there are any more codebook subframes which correspond to the pitch subframe. In the exemplary embodiment there are only two codebook subframes per pitch subframe. If it is determined that there is another codebook subframe which corresponds to the pitch frame, steps **102–108** are repeated for that codebook subframe.

Should there be no more codebook subframes corresponding to the pitch frame, a check is made, block **112**, to determine whether any other pitch subframes exist within the speech frame under analysis. If there is another pitch subframe in the current speech frame under analysis, steps **94–110** are repeated for each pitch subframe and corresponding codebook subframes. When all computations for the current speech frame under analysis are completed, values representative of the LPC coefficients for the speech frame, the pitch lag L and gain b for each pitch subframe, and the codebook index I and gain G for each codebook subframe are packed for transmission, block **114**.

Referring to FIG. **5**, a decoder block diagram is illustrated wherein the received values for the LPC coefficients (α_i's), pitch lags and gains (L & b), and codebook indices and gains (I & G) are used to synthesize the speech. Again in FIG. **5**, as is FIG. **3**, rate information is not considered for purposes in simplification of the discussion. Data rate information can be sent as side information and in some instances can be derived at the channel demodulation stage.

The decoder is comprised of codebook **130** which is provided with the received codebook indices, or for eighth rate the random seed. The output from codebook **130** is provided to one input of multiplier **132** while the other input of multiplier **132** receives the codebook gain G. The output of multiplier **132** is provided along with the pitch lag L and gain b to pitch synthesis filter **134**. The output from pitch synthesis filter **134** is provided along with the LPC coefficients α_i to formant synthesis filter **136**. The output from formant synthesis filter **136** is provided to adaptive postfilter **138** where filtered and output therefrom is the reconstructed speech. As discussed later herein, a version of the decoder is implemented within the encoder. The encoder's decoder does not include adaptive postfilter **138**, but does include a perceptual weighting filter.

FIG. **6** is a flow chart corresponding to the operation of the decoder of FIG. **5**. At the decoder, speech is reconstructed from the received parameters, block **150**. In particular, the received value of the codebook index is input to the codebook which generates a codevector, or codebook output value, block **152**. The multiplier receives the codevector along with the received codebook gain G and multiplies these values, block **154**, with the resulting signal provided to the pitch synthesis filter. It should be noted that the codebook gain G is reconstructed by decoding and inverse quantizing the received DPCM parameters. The pitch synthesis filter is provided with the received pitch lag L and gain b values along with the multiplier output signal so as to filter the multiplier output, block **156**.

The values resulting from filtering the codebook vector by the pitch synthesis filter are input to the formant synthesis filter. Also provided to the formant synthesis filter are LPC coefficients α_i's for use in filtering the pitch synthesis filter output signal, block **158**. The LPC coefficients are reconstructed at the decoder for interpolation by decoding the received DPCM parameters into quantized LSP frequencies, inverse quantizing the LSP frequencies and transforming the LSP frequencies to LPC coefficients α_i's. The output from the formant synthesis filter is provided to the adaptive postfilter where quantization noise is masked, and the reconstructed speech is gain controlled, block **160**. The reconstructed speech is output, block **162**, for conversion to analog form.

Referring now to the block diagram illustration of FIGS. **7***a* and **7***b*, further details on the speech encoding techniques of the present invention are described. In FIG. **7***a*, each frame of digitized speech samples is provided to a Hamming window subsystem **200** where the input speech is windowed before computation of the autocorrelation coefficients in autocorrelation subsystem **202**.

Hamming window subsystem **200** and autocorrelation subsystem **202**, are illustrated in an exemplary implementation in FIG. **8**. Hamming window subsystem **200** which is comprised of lookup table **250**, typically an a 80×16 bit

Read Only Memory (ROM), and multiplier **252**. For each rate the window of speech is centered between the 139th and the 140th sample of each analysis frame which is 160 samples long. The window for computing the autocorrelation coefficients is thus offset from the analysis frame by 60 samples.

Windowing is done using a ROM table containing 80 of the 160 $W_{fr}(n)$ values, since the Hamming window is symmetric around the center. The offset of the Hamming window is accomplished by skewing the address pointer of the ROM by 60 positions with respect to the first sample of an analysis frame. These values are multiplied in single precision with the corresponding input speech samples by multiplier **252**. Let s(n) be the input speech signal in the analysis window. The windowed speech signal $s_w(n)$ is thus defined by:

$$s_w(n) = s(n+60)W_H(n) \quad \text{for } 0 <= n <= 79 \quad (5)$$

and

$$s_w(n) = s(n+60)W_H(159-n) \quad \text{for } 80 <= n <= 159. \quad (6)$$

Exemplary values, in hexadecimal, of the contents of lookup table **250** are set forth in Table II. These values are interpreted as two's complement numbers having 14 fractional bits with the table being read in the order of left to right, top to bottom.

TABLE II

0x051f	0x0525	0x0536	0x0554	0x057d	0x05b1	0x05f2	0x063d
0x0694	0x06f6	0x0764	0x07dc	0x085e	0x08ec	0x0983	0x0a24
0x0ad0	0x0b84	0x0c42	0x0d09	0x0dd9	0x0eb0	0x0f90	0x1077
0x1166	0x125b	0x1357	0x1459	0x1560	0x166d	0x177f	0x1895
0x19af	0x1acd	0x1bee	0x1d11	0x1e37	0x1f5e	0x2087	0x21b0
0x22da	0x2403	0x252d	0x2655	0x277b	0x28a0	0x29c2	0x2ae1
0x2bfd	0x2d15	0x2e29	0x2f39	0x3043	0x3148	0x3247	0x333f
0x3431	0x351c	0x3600	0x36db	0x37af	0x387a	0x393d	0x39f6
0x3aa6	0x3b4c	0x3be9	0x3c7b	0x3d03	0x3d80	0x3df3	0x3e5b
0x3eb7	0x3f09	0x3f4f	0x3f89	0x3fb8	0x3fdb	0x3ff3	0x3fff

Autocorrelation subsystem **202** is comprised of register **254**, multiplexer **256**, shift register **258**, multiplier **260**, adder **262**, circular shift register **264** and buffer **266**. The windowed speech samples $s_w(n)$ are computed every 20 msec. and latched into register **254**. On sample $s_w(0)$, the first sample of an LPC analysis frame, shift registers **258** and **264** are reset to 0. On each new sample $s_w(n)$, multiplexer **256** receives a new sample select signal which allows the sample to enter from register **254**. The new sample $s_w(n)$ is also provided to multiplier **260** where multiplied by the sample $s_w(n-10)$, which is in the last position SR10 of shift register **258**. The resultant value is added in adder **262** with the value in the last position CSR11 of circular shift register **264**.

Shift registers **258** and **260** docked once, replacing $s_w(n-1)$ by $s_w(n)$ in the first position SR1 of shift register **258** and replacing the value previously in position CSR10. Upon docking of shift register **258** the new sample select signal is removed from input to multiplexer **256** such that the sample $s_w(n-9)$ currently in the position SR10 of shift register **260** is allowed to enter multiplexer **256**. In circular shift register **264** the value previously in position CSR11 is shifted into the first position CSR1. With the new sample select signal removed from multiplexer, shift register **258** is set to provide a circular shift of the data in the shift register like that of circular shift register **264**.

Shift registers **258** and **264** are both clocked 11 times in all for every sample such that 11 multiply/accumulate operations are performed. After 160 samples have been clocked in, the autocorrelation results, which are contained in circular shift register **264**, are clocked into buffer **266** as the values R(0)–R(10). All shift registers are reset to zero, and the process repeats for the next frame of windowed speech samples.

Referring back to FIG. 7*a*, once the autocorrelation coefficients have been computed for the speech frame, a rate determination subsystem **204** and an LPC analysis subsystem **206** use this data to respectively compute a frame data rate and LPC coefficients. Since these operations are independent from one another they may be computed in any order or even simultaneously. For purposes of explanation herein, the rate determination is described first.

Rate determination subsystem **204** has two functions: (1) to determine the rate of the current frame, and (2) to compute a new estimate of the background noise level. The rate for the current analysis frame is initially determined based on the current frame's energy, the previous estimate of the background noise level, the previous rate, and the rate command from a controlling microprocessor. The new background noise level is estimated using the previous estimate of the background noise level and the current frame energy.

The present invention utilizes an adaptive thresholding technique for rate determination. As the background noise changes so do the thresholds which are used in selecting the rate. In the exemplary embodiment, three thresholds are computed to determine a preliminary rate selection RT_p. The thresholds are quadratic functions of the previous background noise estimate, and are shown below:

$$T1(B) = -5.544613\ (10^{-6})\ B^2 + 4.047152\ B + 363.1293; \quad (7)$$

$$T2(B) = -1.529733\ (10^{-6})\ B^2 + 8.750045\ B + 1136.214; \quad (8)$$

and

$$T3(B) = -3.957050\ (10^{-6})\ B^2 + 18.89962\ B + 3346.789 \quad (9)$$

where B is the previous background noise estimate.

The frame energy is compared to the three thresholds T1(B), T2(B) and T3(B). If the frame energy is below all three thresholds, the lowest rate of transmission (1 kbps), rate ⅛ where RT_p=4, is selected. If the frame energy is below two thresholds, the second rate of transmission (2 kbps), rate ¼ where RT_p=3, is selected. If the frame energy is below only one threshold, the third rate of transmission (4 kbps), rate ½ where RT_p=2, is selected. If the frame energy is above all of the thresholds, the highest rate of transmission (8 kbps), rate 1 where RT_p=1, is selected.

The preliminary rate RT_p may then be modified based on the previous frame final rate RT_f. If the preliminary rate RT_p is less than the previous frame final rate minus one (RT_f–1), an intermediate rate RT_m is set where RT_m=(RT_f–1). This modification process causes the rate to slowly ramp down when a transition from a high energy signal to a low energy

signal occurs. However should the initial rate selection be equal to or greater than the previous rate minus one (RT_f−1), the intermediate rate RT_m is set to the same as the preliminary rate RT_p, i.e. RT_m=RT_p. In this situation the rate thus immediately increases when a transition from a low energy signal to a high energy signal occurs.

Finally, the intermediate rate RT_m is further modified by rate bound commands from a microprocessor. If the rate RT_m is greater than the highest rate allowed by the microprocessor, the initial rate RT_i is set to the highest allowable value. Similarly, if the intermediate rate RT_m is less than the lowest rate allowed by the microprocessor, the initial rate RT_i is set to the lowest allowable value.

In certain cases it may be desirable to code all speech at a rate determined by the microprocessor. The rate bound commands can be used to set the frame rate at the desired rate by setting the maximum and minimum allowable rates to the desired rate. The rate bound commands can be used for special rate control situations such as rate interlock, and dim and burst transmission, both described later. In an alternate embodiment the LPC coefficients can be calculated prior to the rate determination. Since the calculated LPC coefficients reflect the spectral properties of the input speech frame, the coefficients can be used as an indication of speech activity. Thus, the rate determination can be done based upon the calculated LPC coefficients.

FIG. 9 provides an exemplary implementation of the rate decision algorithm. To start the computation, register 270 is preloaded with the value 1 which is provided to adder 272. Circular shift registers 274, 276 and 278 are respectively loaded with the first, second and third coefficients of the quadratic threshold equations (7)–(9). For example, the last, middle and first positions of circular shift register 274 are respectively loaded with the first coefficient of the equations from which T1, T2 and T3 are computed. Similarly, the last, middle and first positions of circular shift register 276 are respectively loaded with the second coefficient of the equations from which T1, T2 and T3 are computed. Finally, the last, middle and first positions of circular shift register 278 are respectively loaded with the constant term of the equations from which T1, T2 and T3 are computed. In each of circular shift registers 274, 276 and 278, the value is output from the last position.

In computing the first threshold T1 the previous frame background noise estimate B is squared by multiplying the value by itself in multiplier 280. The resultant B^2 value is multiplied by the first coefficient, −5.544613(10^{-6}), which is output from the last position of circular shift register 274. This resultant value is added in adder 286 with the product of the background noise B and the second coefficient, 4.047152, output from the last position of circular shift register 276, from multiplier 284. The output value from adder 286 is then added in adder 288 with the constant term, 363.1293, output from the last position of circular shift register 278. The output from adder 288 is the computed value of T1.

The computed value of T1 output from adder 290 is subtracted in adder 288 from the frame energy value E_f which in the exemplary embodiment is the value R(0) in the linear domain, provided from the autocorrelation subsystem.

In an alternative implementation, frame energy E_f may also be represented in the log domain in dB where it is approximated by the log of the first autocorrelation coefficient R(0) normalized by the effective window length:

$$E_f = 10 \log_{10} \frac{R(0)}{L_A/2} \quad (10)$$

where L_A is the autocorrelation window length. It should also be understood that voice activity may also be measured from various other parameters including pitch prediction gain or formant prediction gain G_a:

$$G_a = 10 \log_{10} \frac{E^{(10)}}{E^{(0)}} \quad (11)$$

where $E^{(10)}$ is the prediction residual energy after the 10th iteration and $E^{(0)}$ is the initial LPC prediction residual energy, as described later with respect to LPC analysis, which is the same as R(0).

From the output of adder 290, the complement of the sign bit of the resulting two's complement difference is extracted by comparator or limiter 292 and provided to adder 272 where added with the output of register 270. Thus, if the difference between R(0) and T1 is positive, register 270 is incremented by one. If the difference is negative, register 270 remains the same.

Circular registers 274, 276 and 278 are then cycled so the coefficients of the equation for T2, equation (8) appear at the output thereof. The process of computing the threshold value T2 and comparing it with the frame energy is repeated as was discussed with respect to the process for threshold value T1. Circular registers 274, 276 and 278 are then again cycled so the coefficients of the equation for T3, equation (9) appear at the output thereof. The computation for threshold value T3 and comparison to the frame energy as was described above. After completion of all three threshold computations and comparisons, register 270 contains the initial rate estimate RT_i. The preliminary rate estimate RT_p is provided to rate ramp down logic 294. Also provided to logic 294 is the previous frame final rate RT_f from LSP frequency quantization subsystem that is stored in register 298. Logic 296 computes the value (RT_f−1) and provides as an output the larger of the preliminary rate estimate RT_p and the value (RT_f−1). The value RT_m is provided to rate limiter logic 296.

As mentioned previously, the microprocessor provides rate bound commands to the vocoder, particularly to logic 296. In a digital signal processor implementation, this command is received in logic 296 before the LPC analysis portion of the encoding process is completed. Logic 296 ensures that the rate does not exceed the rate bounds and modifies the value RT_m should it exceed the bounds. Should the value RT_m be within the range of allowable rates it is output from logic 296 as the initial rate value RT_i. The initial rate value RT_i is output from logic 296 to LSP quantization subsystem 210 of FIG. 7a.

The background noise estimate as mentioned previously is used in computing the adaptive rate thresholds. For the current frame the previous frame background noise estimate B is used in establishing the rate thresholds for the current frame. However for each frame the background noise estimate is updated for use in determining the rate thresholds for the next frame. The new background noise estimate B' is determined in the current frame based on the previous frame background noise estimate B and the current frame energy E_f.

In determining the new background noise estimate B' for use during the next frame (as the previous frame background noise estimate B) two values are computed. The first value V_1 is simply the current frame energy E_f. The second value V_2 is the larger of B+1 and KB, where K=1.00547. To prevent the second value from growing too large, it is forced to be below a large constant M=160.000. The smaller of the two values V_1 or V_2 is chosen as the new background noise estimate B'.

Mathematically,

$$V_1 = R(0) \quad (12)$$

$$V_2 = \min(160000, \max(KB, B+1)) \quad (13)$$

and the new background noise estimate B' is:

$$B' = \min(V_1, V_2) \quad (14)$$

where min (x,y) is the minimum of x and y, and max (x,y) is the maximum of x and y.

FIG. 9 further shows an exemplary implementation of the background noise estimation algorithm. The first value V_1 is simply the current frame energy E_f provided directly to one input of multiplexer **300**.

The second value V_2 is computed from the values KB and B+1, which are first computed. In computing the values KB and B+1, the previous frame background noise estimate B stored in register **302** is output to adder **304** and multiplier **306**. It should be noted that the previous frame background noise estimate B stored in register **302** for use in the current frame is the same as the new background noise estimate B' computed in the previous frame. Adder **304** is also provided with an input value of 1 for addition with the value B so as to generate the term B+1. Multiplier **304** is also provided with an input value of K for multiplication with the value B so as to generate the term KB. The terms B+1 and KB are output respectively from adder **304** and multiplier **306** to separate inputs of both multiplexer **308** and adder **310**.

Adder **310** and comparator or limiter **312** are used in selecting the larger of the terms B+1 and KB. Adder **310** subtracts the term B+1 from KB and provides the resulting value to comparator or limiter **312**. Limiter **312** provides a control signal to multiplexer **308** so as to select an output thereof as the larger of the terms B+1 and KB. The selected term B+1 or KB is output from multiplexer **308** to limiter **314** which is a saturation type limiter which provides either the selected term if below the constant value M, or the value M if above the value M. The output from limiter **314** is provided as the second input to multiplexer **300** and as an input to adder **316**.

Adder 316 also receives at another input the frame energy value E_f. Adder **316** and comparator or limiter **318** are used in selecting the smaller of the value E_f and the term output from limiter **314**. Adder **316** subtracts the frame energy value from the value output from limiter **314** and provides the resulting value to comparator or limiter **318**. Limiter **318** provides a control signal to multiplexer **300** for selecting the smaller of the E_f value and the output from limiter **314**. The selected value output from multiplexer **300** is provided as the new background noise estimate B' to register **302** where stored for use during the next frame as the previous frame background noise estimate B.

Referring back to FIG. 7, each of the autocorrelation coefficients R(0)–R(10) are output from autocorrelation subsystem **202** to LPC analysis subsystem **206**. The LPC coefficients computed in LPC analysis subsystem **206** in both the perceptual weighting filter **52** and formant synthesis *filter* **60**.

The LPC coefficients may be obtained by the autocorrelation method using Durbin's recursion as discussed in *Digital Processing of Speech Signals*, Rabiner & Schafer, Prentice-Hall, Inc., 1978. *This technique is an efficient* computational method for obtaining the LPC coefficients. The algorithm can be stated in the following equations:

$$E^{(0)} = R(0), \; i = 1; \quad (15)$$

$$k_i = \left\{ R(i) - \sum_{j=1}^{i-1} \alpha_j^{(i-1)} R(i-j) \right\} / E^{(i-1)}; \quad (16)$$

$$\alpha_i^{(i)} = k_i; \quad (17)$$

$$\alpha_j^{(i)} = \alpha_j^{(i-1)} - k_i \alpha_{i-j}^{(i-1)} \quad \text{for } 1 <= j <= i-1; \quad (18)$$

$$E^{(i)} = (1 - k_i^2) E^{(i-1)}; \text{ and} \quad (19)$$

If $i < 10$ then goto equation (16) with $i = i + 1$. (20)

The ten LPC coefficients are labeled $\alpha_j^{(10)}$, for $1 \leftarrow j \leftarrow 10$

Prior to encoding of the LPC coefficients, the stability of the filter must be ensured. Stability of the filter is achieved by radially scaling the poles of the filter inward by a slight amount which decreases the magnitude of the peak frequency responses while expanding the bandwidth of the peaks. This technique is commonly known as bandwidth expansion, and is further described in the article "Spectral Smoothing in PARCOR Speech Analysis-Synthesis" by Tohkura et.al., *ASSP Transactions*, December 1978. In the present case bandwidth expansion can be efficiently done by scaling each LPC coefficient. Therefore, as set forth in Table III, the resultant LPC coefficients are each multiplied by a corresponding hex value to yield the final output LPC coefficients α_1–α_{10} of LPC analysis subsystem **206**. It should be noted that the values presented in Table III are given in hexadecimal with 15 fractional bits in two's complement notation. In this form the value 0x8000 represents −1.0 and the value 0x7333 (or 29491) represents 0.899994=29491/32768.

TABLE III

$\alpha_1 = \alpha_1^{(10)}$	●	0x7333
$\alpha_2 = \alpha_2^{(10)}$	●	0x67ae
$\alpha_3 = \alpha_3^{(10)}$	●	0x5d4f
$\alpha_4 = \alpha_4^{(10)}$	●	0x53fb
$\alpha_5 = \alpha_5^{(10)}$	●	0x4b93
$\alpha_6 = \alpha_6^{(10)}$	●	0x4406
$\alpha_7 = \alpha_7^{(10)}$	●	0x3d38
$\alpha_8 = \alpha_8^{(10)}$	●	0x3719
$\alpha_9 = \alpha_9^{(10)}$	●	0x3196
$\alpha_{10} = \alpha_{10}^{(10)}$	●	0x2ca1

The operations are preferably performed in double precision, i.e. 32 bit divides, multiplies and additions. Double precision accuracy is preferred in order to maintain the dynamic range of the autocorrelation functions and filter coefficients.

In FIG. **10**, a block diagram of an exemplary embodiment of the LPC subsystem **206** is shown which implements equations (15)–(20) above. LPC subsystem **206** is comprised of three circuit portions, a main computation circuit **330** and two buffer update circuits **332** and **334** which are used to update the registers of the main computation circuit **330**. Computation is begun by first loading the values R(1)–R(10) into buffer **340**. To start the calculation, register **348** is preloaded with the value R(1) via multiplexer **344**. Register is initialized with R(0) via multiplexer **350**, buffer **352** (which holds 10 $\alpha_j^{(i-1)}$ values) is initialized to all zeroes via multiplexer **354**, buffer **356** (which holds 10 $\alpha_j^{(i)}$ values) is initialized to all zeroes via multiplexer **358**, and i is set to 1 for the computational cycle. For purposes of clarity counters for i and j and other computational cycle control are not shown but the design and integration of this type of logic circuitry is well within the ability of one skilled in the art in *digital logic design.*

The $\alpha_j^{(i-1)}$ value is output from buffer **356** to compute the term $k_i E^{(i-1)}$ as set forth in equation (14). Each value R(i–j)

is output from buffer 340 for multiplication with the $\alpha_j^{(i-1)}$ value in multiplier 360. Each resultant value is subtracted in adder 362 from the value in register 346. The result of each subtraction is stored in register 346 from which the next term is subtracted. There are $i-1$ multiplications and accumulations in the ith cycle, as indicated in the summation term of equation (14). At the end of this cycle, the value in register 346 is divided in divider 364 by the value $E^{(i-1)}$ from register 348 to yield the value k_i.

The value k_i is then used in buffer update circuit 332 to calculate the value $E^{(i)}$ as in equation (19) above, which is used as the value $E^{(i-1)}$ during the next computational cycle of k_i. The current cycle value k_i is multiplied by itself in multiplier 366 to obtain the value k_i^2. The value k_i^2 is then subtracted from the value of 1 in adder 368. The result of this addition is multiplied in multiplier 370 with the value $E^{(i)}$ from register 348. The resulting value $E^{(i)}$ is input to register 348 via multiplexer 350 for storage as the value $E^{(i-1)}$ for the next cycle.

The value k_i is then used to calculate the value $\alpha_i^{(i)}$ as in equation (15). In this case the value k_i is input to buffer 356 via multiplexer 358. The value k_i is also used in buffer update circuit 334 to calculate the values $\alpha_j^{(i)}$ from the values $\alpha_j^{(i-1)}$ as in equation (18). The values currently stored in buffer 352 are used in computing the values $\alpha_j^{(i)}$. As indicated in equation (18), there are $i-1$ calculations in the ith cycle. In the $i=1$ iteration no such calculations are required. For each value of j for the ith cycle a value of $\alpha_j^{(i)}$ is computed. In computing each value of $\alpha_j^{(i)}$, each value of $\alpha_{i-j}^{(i-1)}$ is multiplied in multiplier 372 with the value k_i for output to adder 374. In adder 374 the value $k_i\alpha_{i-j}^{(i-1)}$ is subtracted from the value $\alpha_j^{(i-1)}$ also input to adder 374. The result of each multiplication and addition is provided as the value of $\alpha_j^{(i)}$ to buffer 356 via multiplexer 358.

Once the values $\alpha_i^{(i)}$ and $\alpha_j^{(i)}$ are computed for the current cycle, the values just computed and stored in buffer 356 are output to buffer 352 via multiplexer 354. The values stored in buffer 356 are stored in corresponding positions in buffer 352. Buffer 352 is thus updated for computing the value k_i for the $i+1$ cycle.

It is important to note that data $\alpha_j^{(i-1)}$ generated at the end of a previous cycle is used during the current cycle to generate updates $\alpha_j^{(i)}$ for a next cycle. This previous cycle data must be retained in order to completely generate updated data for the next cycle. Thus two buffers 356 and 352 are utilized to preserve this previous cycle data until the updated data is completely generated.

The above description is written with respect to a parallel transfer of data from buffer 356 to buffer 352 upon completion of the calculation of the updated values. This implementation ensures that the old data is retained during the entire process of computing the new data, without loss of the old data before completely used as would occur in a single buffer arrangement. The described implementation is one of several implementations that are readily available for achieving the same result. For example, buffers 352 and 356 may be multiplexed such that upon calculating the value k_i for a current cycle from values stored in a first buffer, the updates are stored in the second buffer for use during the next computational cycle. In this next cycle the value k_i is computed from the values stored in the second buffer. The values in the second buffer and the value k_i are used to generate updates for the next cycle with these updates stored in the first buffer. This alternating of buffers enables the retention of proceeding computational cycle values, from which updates are generated, while storing update values without overwriting the proceeding values which are needed to generate the updates. Usage of this technique can minimize the delay associated with the computation of the value k_i for the next cycle. Therefore the updates for the multiplications/accumulations in computing k_i may be done at the same time as the next value of $\alpha_j^{(i-1)}$ is computed.

The ten LPC coefficients $\alpha_j^{(10)}$, stored in buffer 356 upon completion of the last computational cycle ($i=10$), are scaled to arrive at the corresponding final LPC coefficients α_j. Scaling is accomplished by providing a scale select signal to multiplexers 344, 376 and 378 so that the scaling values stored in lookup table 342, hex values of Table III, are selected for output through multiplexer 344. The values stored in lookup table 342 are clocked out in sequence and input to multiplier 360. Multiplier 360 also receives via multiplexer 376 the $\alpha_j^{(10)}$ values sequentially output from register 356. The scaled values are output from multiplier 360 via multiplexer 378 as an output to LPC to LSP transformation subsystem 208 (FIG. 7).

In order to efficiently encode each of the ten scaled LPC coefficients in a small number of bits, the coefficients are transformed into Line Spectrum Pair frequencies as described in the article "Line Spectrum Pair (LSP) and Speech Data Compression", by Soong and Juang, ICASSP '84. The computation of the LSP parameters is shown below in equations (21) and (22) along with Table IV.

The LSP frequencies are the ten roots which exist between 0 and π of the following equations:

$$P(\omega)=\cos 5\omega+p_1 \cos 4\omega+ \ldots +p_4 \cos \omega+p_5/2; \quad (21)$$

$$Q(\omega)=\cos 5\omega+q_1 \cos 4\omega+ \ldots +q_4 \cos \omega+q_5/2; \text{ and} \quad (22)$$

where the p_n and q_n values for $n=1, 2, 3, 4$ and are defined recursively in Table IV.

TABLE IV

$P_1 = -(\alpha_1 + \alpha_{10}) - 1$	$q_1 = -(\alpha_1 - \alpha_{10}) + 1$
$P_2 = -(\alpha_2 + \alpha_9) - P_1$	$q_2 = -(\alpha_2 - \alpha_9) + q_1$
$P_3 = -(\alpha_3 + \alpha_8) - P_2$	$q_3 = -(\alpha_3 - \alpha_8) + q_2$
$P_4 = -(\alpha_4 + \alpha_7) - P_3$	$q_4 = -(\alpha_4 - \alpha_7) + q_3$
$P_5 = -(\alpha_5 + \alpha_6) - P_4$	$q_5 = -(\alpha_5 - \alpha_6) + q_4$

In Table IV, the $\alpha_1, \ldots, \alpha_{10}$ values are the scaled coefficients resulting from the LPC analysis. The ten roots of equations (21) and (22) are scaled to between 0 and 0.5 for simplicity. A property of the LSP frequencies is that, if the LPC filter is stable, the roots of the two functions alternate; i.e. the lowest root, ω_1, is the lowest root of $P(\omega)$, the next lowest root, ω_2, is the lowest root of $Q(\omega)$, and so on. Of the ten frequencies, the odd frequencies are the roots of the $P(\omega)$, and the even frequencies are the roots of the $Q(\omega)$.

The root search is done as follows. First, the p and q coefficients are computed in double precision by adding the LPC coefficients as shown above. $P(\omega)$ is then evaluated every $\pi/256$ radians and these values are then evaluated for sign changes, which identify a root in that subregion. If a root is found, a linear interpolation between the two bounds of this region is then done to approximate the location of the root. One Q root is guaranteed to exist between each pair of P roots (the fifth Q root exists between the fifth P root and π) due to the ordering property of the frequencies. A binary search is done between each pair of P roots to determine the location of the Q roots. For ease in implementation, each P root is approximated by the closest $\pi/256$ value and the binary search is done between these approximations. If a root is not found, the previous unquantized values of the LSP frequencies from the last frame in which the roots were found are used.

Referring now to FIG. 11, an exemplary implementation of the circuitry used to generate the LSP frequencies is illustrated. The above described operation requires a total of 257 possible cosine values between 0 and π, which are stored in double precision in a lookup table, cosine lookup table **400** which is addressed by mod **256** counter **402**. For each value of j input to lookup table **400**, an output of cos ω, cos 2ω, cos 3ω, cos 4ω and cos 5ω are provided where:

$$\omega=j\pi/256 \quad (23)$$

where j is a count value.

The values cos ω, cos 2ω, cos 3ω and cos 4ω output from lookup table **400** are input to a respective multiplier **404**, **406**, **408**, and **410**, while the value cos 5ω is input directly to summer **412**. These values are multiplied in a respective multiplier **404**, **406**, **408**, and **410** with a respective one of the values p_4, p_3, p_2 and p_1 input thereto via multiplexers **414**, **416**, **418** and **420**. The resultant values from this multiplication are also input to summer **412**. Furthermore the value p_5 is provided through multiplexer **422** to multiplier **424** with the constant value 0.5, i.e. ½, also provided to multiplier **424**. The resultant value output from multiplier **424** is provided as another input to summer **412**. Multiplexers **414**–**422** select between the values p_1–p_5 or q_1–q_5 in response to a p/q coefficient select signal, so as to use the same circuitry for computation of both the P(ω) and Q(ω) values. The circuitry for generating the p_1–p_5 or q_1–q_5 values is not shown but is readily implemented using a series of adders for adding and subtracting the LPC coefficients and p_1–p_5 or q_1–q_5 values, along with registers for storing the p_1–p_5 or q_1–q_5 values.

Summer **412** sums the input values to provide the output P(ω) or Q(ω) value as the case may be. For purposes of ease in further discussion the case of the values of P(ω) will be considered with the values of Q(ω) computed in a similar fashion using the q_1–q_5 values. The current value of P(ω) is output from summer **412** where stored in register **426**. The preceding value of P(ω), previously stored in register **426** is shifted to register **428**. The sign bits of the current and previous values of P(ω) are exclusive OR'ed in exclusive OR gate **430** to give an indication of a zero crossing or sign change, in the form of an enable signal that is sent to linear interpolator **434**. The current and previous value of P(ω) are also output from registers **426** and **428** to linear interpolator **434** which is responsive to the enable signal for interpolating the point between the two values of P(ω) at which the zero crossing occurs. This linear interpolation fractional value result, the distance from the value j−1, is provided to buffer **436** along with the value j from counter **256**. Gate **430** also provides the enable signal to buffer **436** which permits the storage of the value j and the corresponding fractional value FV_j.

The fractional value is subtracted from the value j as output from buffer **436** in adder **438**, or in the alternative may be subtracted therefrom as input to buffer **436**. In the alternative a register in the j line input to buffer **436** may be used such that the value j−1 is input to buffer **436** with the fractional value input also input thereto. The fractional value may be added to the value j−1 either before storage in register **436** or upon output thereof. In any case the combined value of $j+FV_j$ or $(j-1)+FV_j$ is output to divider **440** where divided by the input constant value of 512. The division operation may be simply be performed by merely changing the binary point location in the representative binary word. This division operation provides the necessary scaling to arrive at a LSP frequency between 0 and 0.5.

Each function evaluation of P(ω) or Q(ω) requires 5 cosine lookups, 4 double precision multiplications, and 4 additions. The computed roots are typically only accurate to about 13 bits, and are stored in single precision. The LSP frequencies are provided to LSP quantization subsystem **210** (FIG. 7) for quantization.

Once the LSP frequencies have been computed, they must be quantized for transmission. Each of the ten LSP frequencies centers roughly around a bias value. It should be noted that the LSP frequencies approximate the bias values when the input speech has flat spectral characteristics and no short term prediction can be done. The biases are subtracted out at the encoder, and a simple DPCM quantizer is used. At the decoder, the bias is added back. The negative of the bias value, in hexadecimal, for each LSP frequency, ω_1–ω_{10}, as provided from the LPC to LSP transformation subsystem is set forth in Table V. Again the values given in Table V are in two's complement with 15 fractional bits. The hex value 0x8000 (or −32768) represents −1.0. Thus the first value in Table V, the value 0xfa2f (or −1489) represents −0.045441≈ −1489/32768.

TABLE V

LSP frequency	Negative Bias Value
ω_1	0xfa2f
ω_2	0xf45e
ω_3	0xee8c
ω_4	0xe8bb
ω_5	0xe2e9
ω_6	0xdd18
ω_7	0xd746
ω_8	0xd175
ω_9	0xcba3
ω_{10}	0xc5d2

The predictor used in the subsystem is 0.9 times the quantized LSP frequency from the previous frame stored in a buffer in the subsystem. This decay constant of 0.9 is inserted so that channel errors will eventually die off.

The quantizers used are linear, but vary in dynamic range and step size with the rate. Also, in high rate frames more bits are transmitted for each LSP frequency, therefore the number of quantization levels depends upon the rate. In Table VI, the bit allocation and the dynamic range of the quantization are shown for each frequency at each rate. For example, at rate 1, ω_1 is uniformly quantized using 4 bits (that is, into 16 levels) with the highest quantization level being 0.025 and the lowest being −0.025.

TABLE VI

RATE	Full	Half	Quarter	Eighth
ω_1	4: ± .025	2: ± .015	1: ± .01	1: ± .01
ω_2	4: ± .04	2: ± .015	1: ± .01	1: ± .015
ω_3	4: ± .07	2: ± .03	1: ± .01	1: ± .015
ω_4	4: ± .07	2: ± .03	1: ± .01	1: ± .015
ω_5	4: ± .06	2: ± .03	1: ± .01	1: ± .015
ω_6	4: ± .06	2: ± .02	1: ± .01	1: ± .015
ω_7	4: ± .05	2: ± .02	1: ± .01	1: ± .01
ω_8	4: ± .05	2: ± .02	1: ± .01	1: ± .01
ω_9	4: ± .04	2: ± .02	1: ± .01	1: ± .01
ω_{10}	4: ± .04	2: ± .02	1: ± .01	1: ± .01
Total	40 bits	20 bits	10 bits	10 bits

If the quantization ranges for the rate chosen by the rate decision algorithm are not large enough or a slope overflow occurs, the rate is bumped up to the next higher rate. The rate continues to be bumped up until the dynamic range is accommodated or full rate is reached. In FIG. 12 an exem-

plary block diagram illustration of one implementation of the optional rate bump up technique is provided.

FIG. 12 illustrates in block diagram form an exemplary implementation of the LSP quantization subsystem 210 which includes the rate bump up circuitry. In FIG. 12, the current frame LSP frequencies are output from divider 440 (FIG. 11) to register 442 where they are stored for output during a rate bump up determination in the next frame. The previous frame LSP frequencies and the current frame LSP frequencies are output respectfully output from register 440 and divider 440 to rate bump up logic 442 for a current frame rate bump up determination. Rate bump up logic 442 also receives the initial rate decision, along with the rate the rate bound commands from rate determination subsystem 204. In determining whether a rate increase is necessary, logic 442 compares the previous frame LSP frequencies with the current frame LSP frequencies based on the sum of the square of the difference between the current and previous frame LSP frequencies. The resulting value is then compared with a threshold value for which if exceeded is an indication that an increase in rate is necessary to ensure high quality encoding of the speech. Upon exceeding the threshold value, logic 442 increments the initial rate by one rate level so as to provide an output of the final rate used throughout the encoder.

In FIG. 12, each LSP frequency value ω_1–ω_{10} is input one at a time to adder 450 along with the corresponding bias value. The bias value is subtracted from the input LSP value and the result thereof output to adder 452. Adder 452 also receives as an input a predictor value, a previous frame corresponding LSP value multiplied by a decay constant. The predictor value is subtracted from the output of adder 450 by adder 452. The output of adder 452 is provided as an input to quantizer 454.

Quantizer 454 is comprised of limiter 456, minimum dynamic range lookup table 458, inverse step size lookup table 460, adder 462, multiplier 464 and bit mask 466. Quantization is performed in quantizer 454 by first determining whether the input value is within the dynamic range of quantizer 454. The input value is provided to limiter 456 which limits the input value to the upper and lower bounds of the dynamic range if the input exceeds the bounds provided by lookup table 458. Lookup table 458 provides the stored bounds, according to Table VI, to limiter 456 in response to the rate input and the LSP frequency index i input thereto. The value output from limiter 456 is input to adder 462 where the minimum of the dynamic range, provided by lookup table 458 is subtracted therefrom. The value output from lookup table 458 is again determined by the rate and LSP frequency index i in accordance with the minimum dynamic range values, disregarding the value sign, set forth in Table VI. For example the value in lookup table 458 for (full rate, ω_1) is 0.025.

The output from adder 462 is then multiplied in multiplier 464 by a value selected from lookup table 460. Lookup table 460 contains values corresponding to the inverse of the step size for each LSP value at each rate in accordance with the values set forth in Table VI. The value output from lookup table 460 is selected by the rate and LSP frequency index i. For each rate and LSP frequency index i the value stored in lookup table 460 is the quantity ((2^n-1)/dynamic range), where n is the number of bits representing the quantized value. Again for example, the value in lookup table 460 for (rate 1, ω_1) is (15/0.05) or 300.

The output from multiplier 464 is is a value between 0 and 2^n-1 which is provided to bit mask 466. Bit mask 466 in response to the rate and LSP frequency index extracts from the input value the appropriate number of bits according to Table VI. The extracted bits are the n integer value bits of the input value so as to provide a bit limited output $\Delta\omega_i$. The values $\Delta\omega_i$ are the quantized unbiased differentially encoded LSP frequencies that are transmitted over the channel representative of the LPC coefficients.

The value $\Delta\omega_i$ is also fed back through a predictor comprised of inverse quantizer 468, adder 470, buffer 472 and multiplier 474. Inverse quantizer 468 is comprised of step size lookup table 476, minimum dynamic range lookup table 478, multiplier 480 and adder 482.

The value $\Delta\omega_i$ is input to multiplier 480 along with a selected value from lookup table 476. Lookup table 476 contains values corresponding to the step size for each LSP value at each rate in accordance with the values set forth in Table VI. The value output from lookup table 476 is selected by the rate and LSP frequency index i. For each rate and LSP frequency index i the value stored in lookup table 460 is the quantity (dynamic range/2^n–1), where n is the number of bits representing the quantized value. Multiplier 480 multiplies the input values and provides an output to adder 482.

Adder 482 receives as another input a value from lookup table 478. The value output from lookup table 478 is determined by the rate and LSP frequency index i in accordance with the minimum dynamic range values, disregarding the value sign, set forth in Table VI. Adder 482 adds the minimum dynamic range value provided by lookup table 478 with the value output from multiplier 480 with resulting value output to adder 470.

Adder 470 receives as another input the predictor value output from multiplier 474. These values are added in adder 470 and stored in ten word storage buffer 472. Each value previous frame value output from buffer 472 during the current frame is multiplied in multiplier 474 by a constant, 0.9. The predictor values as output from multiplier 474 are provided to both adders 452 and 470 as previously discussed.

In the current frame the value stored in buffer 472 is the previous frame reconstructed LSP values minus the bias value. Similarly in the current frame the value output from adder 470 is the current frame reconstructed LSP values also without bias. In the current frame the output from buffer 472 and adder 470 are respectively provided to adders 484 and 486 where the bias is added into the values. The values output from adders 484 and 486 are respectively the previous frame reconstructed LSP frequency values and the current frame reconstructed LSP frequency values. LSP smoothing is done at the lower rates according to the equation:

$$\text{Smoothed LSP}=a(\text{current LSP})+(1-a)(\text{previous LSP}) \quad (34)$$

where

a=0 for full rate;

a=0.1 for half rate;

a=0.5 for quarter rate; and

a=0.85 for eighth rate.

The previous frame (f–1) reconstructed LSP frequency $\omega'_{i,f-1}$ values and the current frame (f) reconstructed LSP frequency values $\omega'_{i,f}$ are output from quantization subsystem 210 to pitch subframe LSP interpolation subsystem 216 and codebook subframe LSP interpolation subsystem 226. The quantized LSP frequency values $\Delta\omega_i$ are output from LSP quantization subsystem 210 to data assembler subsystem 236 for transmission.

The LPC coefficients used in the weighting filter and the formant synthesis filter described later are appropriate for

the pitch subframe which is being encoded. For pitch subframes, the interpolation of the LPC coefficients is done once for each pitch subframe and are as follows in Table VII:

TABLE VII

Rate 1:	
$\omega_i = 0.75\omega'_{i,f-1} + 0.25\omega'_{i,f}$	for pitch subframe 1
$\omega_i = 0.5\omega'_{i,f-1} + 0.5\omega'_{i,f}$	for pitch subframe 2
$\omega_i = 0.25\omega_{i,f-1} + 0.75\omega'_{i,f}$	for pitch subframe 3
$\omega_i = \omega'_{i,f}$	for pitch subframe 4
Rate ½:	
$\omega_i = 0.625\omega'_{i,f-1} + 0.375\omega'_{i,f}$	for pitch subframe 1
$\omega_i = 0.125\omega'_{i,f-1} + 0.875\omega'_{i,f}$	for pitch subframe 2
Rate ¼:	
$\omega_i = 0.625\omega'_{i,f-1} + 0.375\omega'_{i,f}$	for pitch subframe 1
Rate ⅛:	
Pitch Search is not done.	

Pitch subframe counter **224** is used to keep track of the pitch subframes for which the pitch parameters are computed, with the counter output provided to pitch subframe LSP interpolation subsystem **216** for use in the pitch subframe LSP interpolation. Pitch subframe counter **224** also provides an output indicative of a completion of the pitch subframe for the selected rate to data packing subsystem **236**.

FIG. **13** illustrates an exemplary implementation of pitch subframe LSP interpolation subsystem **216** for interpolating the LSP frequencies for the relevant pitch subframe. In FIG. **13**, the previous and current LSP frequencies $\omega'_{i,f-1}$ and $\omega'_{i,f}$ are respectively output from LSP quantization subsystem to multipliers **500** and **502** where respectively multiplied by a constant provided from memory **504**. Memory **504** stores a set of constant values and in accordance with an input of the pitch subframe number from a pitch subframe counter, discussed later, provides an output of constants as set forth in Table VII for multiplication with the previous and current frame LSP values. The outputs of multipliers **500** and **502** are added in adder **506** to provide the LSP frequency values for the pitch subframe in accordance with the equations of Table VII. For each pitch subframe, once the interpolation of LSP frequencies is accomplished a reverse LSP to LPC transformation is performed to obtain the current coefficients of A(z) and the perceptual weighting filter. The interpolated LSP frequency values are thus provided to LSP to LPC transformation subsystem **218** of FIG. **7**.

LSP to LPC transformation subsystem **218** converts the interpolated LSP frequencies back into LPC coefficients for use in resynthesizing the speech. Again, the previously reference article "Line Spectrum Pair (LSP) and Speech Data Compression", by Soong and Juang provides a full discussion and derivation of the algorithm implemented in the present invention in the transformation process. The computational aspects are such that P(z) and Q(z) can be expressed in terms of the LSP frequencies by the equations:

$$P(z) = (1+z^{-1}) \prod_{i=1}^{5} (1 - 2\cos(\omega_{2i-1})z^{-1} + z^{-2}) \quad (25)$$

where w_i are the roots of the P' polynomial (odd frequencies), and

$$Q(z) = (1-z^{-1}) \prod_{i=1}^{5} (1 - 2\cos(\omega_{2i})z^{-1} + z^{-2}) \quad (26)$$

where w_i are the roots of the Q' polynomial (even frequencies), and

$$A(z) = \frac{P(z) + Q(z)}{2} . \quad (27)$$

The computation is performed by first computing the values $2\cos(\omega_i)$ for all of the odd frequencies i. This computation is accomplished using a 5th order single precision Taylor Series expansion of cosine about zero (0). A Taylor expansion about the closest point in the cosine table could potentially be more accurate, but the expansion about 0 achieves sufficient accuracy and does not involve an excessive amount of computation.

Next the coefficients of the P polynomial are computed. The coefficients of a product of polynomials is the convolution of the sequences of coefficients of the individual polynomials. The convolution of the 6 sequences of z polynomial coefficients in equation (25) above, $\{1, -2\cos(\omega_1), 1\}$, $\{1, -2\cos(\omega_3), 1\} \ldots \{1, -2\cos(\omega_9), 1\}$, and $\{1, 1\}$, is then computed.

Once the P polynomial is computed, the same procedure is repeated for the Q polynomial where the 6 sequences of z polynomial coefficients in equation (26) above, $\{1, -2\cos(\omega_2), 1\}$, $\{1, -2\cos(\omega_4), 1\} \ldots \{1, -2\cos(\omega_{10}), 1\}$, and $\{1, -1\}$, and the appropriate coefficients are summed and divided by 2, i.e. shifted by 1 bit, to produce the LPC coefficients.

FIG. **13** further shows an exemplary implementation of the LSP to LPC transformation subsystem in detail. Circuit portion **508** computes the value of $-2\cos(\omega_i)$ from the input value of ω_i. Circuit portion **508** is comprised of buffer **509**; adders **510** and **515**; multipliers **511**, **512**, **514**, **516** and **518**; and registers **513** and **515**. In computing the values for $-2\cos(\omega_i)$ registers **513** and **515** are initialized to zero. Since this circuit computes $\sin(\omega_i)$, ω_i is first subtracted in adder **510** from the input constant value $\pi/2$. This value is squared by multiplier **511** and then the values $(\pi/2-\omega_i)^2$, $(\pi/2-\omega_i)^4$, $(\pi/2-\omega_i)^6$, and $(\pi/2-\omega_i)^8$ are successively computed using multiplier **512** and register **513**.

The Taylor series expansion coefficients c[1]–c[4] are successively fed into multiplier **514** along with the values output from multiplier **512**. The values output from multiplier **514** are input to adder **515** where along with the output of register **516** the values are summed to provide the output $c[1](\pi/2-\omega_i)^2+c[2](\pi/2-\omega_i)^4+c[3](\pi/2-\omega_i)^6+c[4](\pi/2-\omega_i)^8$ to multiplier **517**. The input to multiplier **517** from register **516** is multiplied in multiplier **517** with the output $(\pi/2-\omega_i)$ from adder **510**. The output from multiplier **517**, the value $\cos(\omega_i)$, is multiplied in multiplier **518** with the constant −2 so as to provide output $-2\cos(\omega_i)$. The value $-2\cos(\omega_i)$ is provided to circuit portion **520**.

Circuit portion **520** is used in the computation of the coefficients of the P polynomial. Circuit portion **520** is comprised of memory **521**, multiplier **522**, and adder **523**. The array of memory locations P(1) . . . P(11) is initialized to 0 except for P(1) which is set to 1. The old indexed $-2\cos(w_i)$ values are fed into multiplier **524** to perform the convolution of $(1, -2\cos(w_i), 1)$ where $1 \leq i \leq 5$, $1 \leq j \leq 2i+1$, $P(j)>0$ for $j<1$. Circuit portion **520** is duplicated (not shown) for computing the coefficients of the Q polynomial. The resultant final new values of P(1)–P(11) and Q(1)–Q(11) are provided to circuit portion **524**.

Circuit portion **524** is provided for completion of the computation of the pitch subframe ten LPC coefficients α_i

for i=1 to i=10. Circuit portion 524 is comprised of buffers 525 and 526; adders 527, 528 and 529; and divider or bit shifter 530. The final P(i) and Q(i) values are stored in buffers 525 and 526. The P(i) and P(i+1) values are summed in adder 527 while the corresponding Q(i) and Q(i+1) values are subtracted in adder 528, for $1 \leq i \leq 10$. The output of adders 527 and 528, restfully P(z) and Q(z) are input to adder 529 where summed and output as the value (P(z)+Q(z)). The output of adder is divided by two by shifting the bits by one position. Each bit shifted value of (P(z)+Q(z))/2 is an output LPC coefficient α_i. The pitch subframe LPC coefficients are provided to pitch search subsystem 220 of FIG. 7.

The LSP frequencies are also interpolated for each codebook subframe as determined by the selected rate, except for full rate. The interpolation is computed in a manner identical to that of the pitch subframe LSP interpolations. The codebook subframe LSP interpolations are computed in codebook subframe LSP interpolation subsystem 226 and are provided to LSP to LPC transformation subsystem 228 where transformation is computed in a manner similar to that of LSP to LPC transformation subsystem 218.

As discussed with reference to FIG. 3, the pitch search is an analysis by synthesis technique, in which encoding is done by selecting parameters which minimize the error between the input speech and the speech synthesized using those parameters. In the pitch search, the speech is synthesized using the pitch synthesis filter whose response is expressed in equation (2). Each 20 msec. speech frame is subdivided into a number of pitch subframes which, as previously described, depends on the data rate chosen for the frame. Once per pitch subframe, the parameters b and L, the pitch gain and lag, respectively, are calculated. In the exemplary implementation herein the pitch lag L ranges between 17 and 143, for transmission reasons L=16 is reserved for the case when b=0.

The speech coder utilizes a perceptual noise weighting filter of the form set forth in equation (1). As mentioned previously the purpose of the perceptual weighting filter is to weight the error at frequencies of less power to reduce the impact of error related noise. The perceptual weighting filter is derived from the short term prediction filter previously found. The LPC coefficients used in the weighting filter, and the formant synthesis filter described later, are those interpolated values appropriate for the subframe which is being encoded.

In performing the analysis-by-synthesis operations, a copy of the speech decoder/synthesizer is used in the encoder. The form of the synthesis filter used in the speech encoder is given by equations (3) and (4). Equations (3) and (4) correspond to a decoder speech synthesis filter followed by the perceptual weighting filter, therefore called the weighted synthesis filter.

The pitch search is performed assuming a zero contribution from the codebook at the current frame, i.e. G=0. For each possible pitch lag, L, the speech is synthesized and compared with the original speech. The error between the input speech and the synthesized speech is weighted by the perceptual weighting filter before its mean square error (MSE) is calculated. The objective is to pick values of L and b, from all possible values of L and b, which minimize the error between the perceptually weighted speech and the perceptually weighted synthesized speech. The minimization of the error may be expressed by the following equation:

$$MSE = \frac{1}{L_p} \sum_{n=0}^{L_p-1} (x(n) - x'(n))^2 \quad (28)$$

where L_p is the number of samples in the pitch subframe, which in the exemplary embodiment is 40 for a full rate pitch subframe. The pitch gain, b, is computed which minimizes the MSE. These calculations are repeated for all allowed values of L, and the L and b that produce the minimum MSE are chosen for the pitch filter.

Calculating the optimal pitch lag involves the formant residual (p(n) in FIG. 3) for all time between $n=-L_{max}$ to $n=(L_p-L_{min})-1$ where L_{max} is the maximum pitch lag value, L_{min} is the minimum pitch lag value and L_p is the pitch subframe length for the selected rate, and where n=0 is the start of the pitch subframe. In the exemplary embodiment $L_{max}=143$ and $L_{min}=17$. Using the numbering scheme provided in FIG. 14, for rate ¼, n=−143 to n=142; for rate ½, n=−143 to n=62; and for rate 1, n=−143 to n=22. For n<0, the formant residual is simply the output of the pitch filter from the previous pitch subframes, which is held in the pitch filter memory, and is referred to as the closed loop formant residual. For n≧0, the formant residual is the output of a formant analysis filter having a filter characteristic of A(z) where the input is the current analysis frame speech samples. For n≧0, the formant residual is referred to as the open loop formant residual and would be exactly p(n) if the pitch filter and codebook do a perfect prediction at this subframe. Further explanation of the computation of the optimum pitch lag from the associated formant residual values is provided with reference to FIGS. 14–17.

The pitch search is done over 143 reconstructed closed-loop formant residual samples, p(n) for n<0, plus L_p-L_{min} unquantized open-loop formant residual samples, $p_o(n)$ for n≧0. The search effectively changes gradually from mostly an open-loop search where L is small and thus most of the residual samples used are n>0, to a mostly closed-loop search where L is large and thus all of the residual samples used are n<0. For example, using the numbering scheme provided in FIG. 14 at full rate, where the pitch subframe is comprised of 40 speech samples, the pitch search begins using the set of formant residual samples numbered n=−17 to n=22. In this scheme from n=−17 to n=−1, the samples are closed-loop formant residual samples while from n=0 to n=22 the samples are open-loop formant residual samples. The next set of formant residual samples used in determining the optimum pitch lag are the samples numbered n=−18 to n=21. Again, from n=−18 to n=−1, the samples are closed-loop formant residual samples while from n=0 to n=21 the samples are open-loop formant residual samples. This process continues through the sample sets until the pitch lag is computed for the last set of formant residual samples, n=−143 to n=−104.

As discussed previously with respect to equation (28), the objective is to minimize the error between x(n), the perceptually weighted speech minus the zero input response (ZIR) of the weighted formant filter, and x'(n), the perceptually weighted synthesized speech given no memory in the filters, over all possible values of L and b, given zero contribution from the stochastic codebook (G=0). Equation (28) can be rewritten with respect to b where:

$$MSE = \frac{1}{L_p} \sum_{n=0}^{L_p-1} (x(n) - by(n))^2 \quad (29)$$

where,

-continued

$$y(n) = h(n)*p(n-L) \quad \text{for } 0 \leq n \leq L_p - 1 \tag{30}$$

where y(n) is the weighted synthesized speech with pitch lag L when b=1, and h(n) is the impulse response of the weighted formant synthesis filter having the filter characteristic according to equation (3).

This minimization process is equivalent to maximizing the value E_L where:

$$E_L = \frac{(E_{xy})^2}{E_{yy}} \tag{31}$$

where,

$$E_{xy} = \sum_{n=0}^{L_p-1} x(n)y(n) \tag{32}$$

and,

$$E_{yy} = \sum_{n=0}^{L_p-1} y(n)y(n) \tag{33}$$

The optimum b for the given L is found to be:

$$b_L = \frac{E_{xy}}{E_{yy}} \tag{34}$$

This search is repeated for all allowed values of L. The optimum b is restricted to be positive, so L resulting in any negative E_{xy} is ignored in the search. Finally the lag, L, and the pitch gain, b, that maximize E_L are chosen for transmission.

As mentioned previously, x(n) is actually the perceptually weighted difference between the input speech and the ZIR of the weighted formant filter because for the recursive convolution, set for below in equations (35)–(38), the assumption is that the filter A(z) always starts with 0 in the filter memory. However the filter starting with a 0 in the filter memory is not actually the case. In synthesis, the filter will have a state remaining from the previous subframe. In the implementation, the effects of the initial state are subtracted from the perceptually weighted speech at the start. In this way, only the response of the steady-state filter A(z), all memories initially=0, to p(n) needs to be calculated for each L, and recursive convolution can be used. This value of x(n) needs to be computed only once but y(n), the zero state response of the formant filter to the output of the pitch filter, needs to be computed for each lag L. The computation of each y(n) involves many redundant multiplications, which do not need to be computed each lag. The method of recursive convolution described below is used to minimize the computation required.

With respect to recursive convolution the value $y_L(n)$ is defined by the value y(n) where:

$$y_L(n) = h(n) * p(n-L) \qquad 17 \leq L \leq 143 \tag{35}$$

or,

$$y_L(n) = \Sigma\, h(i)\, p(n-L-i) \qquad 17 \leq L \leq 143 \tag{36}$$

From equations (32) and (33) it can be seen that:

$$y_L(0) = p(-L)h(0) \tag{37}$$

$$y_L(n) = y_{L-1}(n-1) + p(-L)h(n) \quad 1 \leq n \leq L_p, 17 < L \leq 143 \tag{38}$$

In this way once the initial convolution for $y_{17}(n)$ is done, the remaining convolutions can be done recursively, greatly decreasing the number of computations required. For the example given above for rate 1, the value $y_{17}(n)$ is computed by equation (36) using the set of formant residual samples numbered n=−17 to n=22.

Referring to FIG. 15, the encoder includes a duplicate of the decoder of FIG. 5, decoder subsystem 235 of FIG. 7, absent the adaptive postfilter. In FIG. 15 the input to the pitch synthesis filter 550 is the product of the codebook value $c_f(n)$ and the codebook gain G. The output formant residual samples p(n) are input to formant synthesis filter 552 where filtered and output as reconstructed speech samples s'(n). The reconstructed speech samples s'(n) are subtracted from the corresponding input speech samples s(n) in adder 554. The difference between the samples s(n)' and s(n) are input to perceptual weighting filter 556. With respect to pitch synthesis filter 550, formant synthesis filter 552 and perceptual weighting filter 556, each filter contains a memory of the filter state where: M_p is the memory in the pitch synthesis filter 550; M_a is the memory in the formant synthesis filter 552; and M_w is the memory in the perceptual weighting filter 556.

The filter state M_a from decoder subsystem formant synthesis filter 552 is provided to pitch search subsystem 220 of FIG. 7. In FIG. 16 the filter state M_a is provided to calculate the zero input response (ZIR) of filter 560 which computes the ZIR of formant synthesis filter 552. The computed ZIR value is subtracted from the input speech samples s(n) in adder 562 with the result weighted by perceptual weighting filter 564. The output from perceptual weighting filter 564, $x_p(n)$, is used as the weighted input speech in equations (28)–(34) where $x(n)=x_p(n)$.

Referring back to FIGS. 14 and 15, pitch synthesis filter 550 as illustrated in FIG. 14 provides to adaptive codebook 568 which is in essence a memory for storing the closed and open loop formant residual samples which were computed as discussed above. The closed loop formant residual is stored in memory portion 570 while the open loop formant residual is stored in memory portion 572. The samples are stored according to the exemplary numbering scheme as discussed above. The closed loop formant residual is organized as discussed above with respect to usage for each pitch lag L search. The open loop formant residual is computed from the input speech samples s(n) for each pitch subframe using the formant analysis filter 574 which uses the decoder subsystem formant synthesis filter 552 memory M_a in computing the values of $p_o(n)$. The values of $p_o(n)$ for the current pitch subframe are shifted through a series of delay elements 576 for providing to memory portion 572 of adaptive codebook 568. The open loop formant residuals are stored with the first residual sample generated numbered as 0 and the last numbered 142.

Referring now to FIG. 16, the impulse response h(n) of the formant filter is computed in filter 566 and output to shift register 580. As discussed above with respect to the impulse response of the formant filter h(n), equations (29)–(30) and (35)–(38), these values are computed for each pitch subframe in filter. To further reduce the computational requirements of the pitch filter subsystem, the impulse response of the formant filter h(n) is truncated to 20 samples.

Shift register 580 along with multiplier 582, adder 584 and shift register 586 are configured to perform the recursive convolution between the values h(n) from shift register 580 and the values c(m) from adaptive codebook 568 as discussed above. This convolution operation is performed to find the zero-state response (ZSR) of the formant filter to the input coming from the pitch filter memory, assuming that the pitch gain is set to 1. In operation of the convolution circuitry, n cycles from L_p to 1 for each m while m cycles from $(L_p-17)-1$ to −143. In register 586 data is not forwarded when n=1 and data is not latched in when $n=L_p$. Data is provided as an output from the convolution circuitry when m≦31 17.

Following the convolution circuitry is correlation and comparison circuitry which performs the search to find the optimal pitch lag L and pitch gain b. The correlation circuitry, also referred to as the mean square error (MSE) circuitry, computes the auto and cross-correlation of the ZSR with the perceptually weighted difference between the ZIR of the formant filter and the input speech, i.e. x(n). Using these values, the correlation circuitry computes the value of the optimal pitch gain b for each value of the pitch lag. The correlation circuitry is comprised of shift register **588**, multipliers **590** and **592**, adders **594** and **596**, registers **598** and **600**, and divider **602**. In the correlation circuitry computations are such that n cycles from L_p to 1 while m cycles from $(L_p-17)-1$ to −143.

The correlation circuitry is followed by comparison circuitry which performs the comparisons and stores the data in order to determine the optimum value of pitch lag L and gain b. The comparison circuitry is comprised of multiplier **604**; comparator **606**; registers **608**, **610** and **612**; and quantizer **614**. The comparison circuitry outputs for each pitch subframe the values for L and b which minimize the error between the synthesized speech and the input speech. The value of b is quantized into eight levels by quantizer **614** and represented by a 3-bit value, with an additional level, b=0 level being inferred when L=16. These values of L and b are provided to codebook search subsystem **230** and data buffer **222**. These values are provided via data packing subsystem **238** or data buffer **222** to decoder **234** for use in the pitch search.

Like the pitch search, the codebook search is an analysis by synthesis coding system, in which encoding is done by selecting parameters which minimize the error between the input speech and the speech synthesized using those parameters. For rate ½, the pitch gain b is set to zero.

As discussed previously, each 20 msec. is subdivided into a number of codebook subframes which, as previously described, depends upon the the data rate chosen for the frame. Once per codebook subframe, the parameters G and I, the codebook gain and index, respectively, are calculated. In the calculation of these parameters the LSP frequencies are interpolated for the subframe, except for full rate, in codebook subframe LSP interpolation subsystem **226** in a manner similar to that described with reference to pitch subframe LSP interpolation subsystem **216**. The codebook subframe interpolated LSP frequencies are also converted to LPC coefficients by LSP to LPC transformation subsystem **228** for each codebook subframe. Codebook subframe counter **232** is used to keep track of the codebook subframes for which the codebook parameters are computed, with the counter output provided to codebook subframe LSP interpolation subsystem **226** for use in the codebook subframe LSP interpolation. Codebook subframe counter **232** also provides an output, indicative of a completion of a codebook subframe for the selected rate, to pitch subframe counter **224**.

The excitation codebook consists of 2^M code vectors which are constructed from a unit-variant white Gaussian random sequence. There are 128 entries in the codebook for M=7. The codebook is organized in a recursive fashion such that each code vector differs from the adjacent code vector by one sample; that is, the samples in a code vector are shifted by one position such that a new sample is shifted in at one end and a sample is dropped at the other. Therefore a recursive codebook can be stored as a linear array that is $2^M+(L_C-1)$ long where L_C is the codebook subframe length. However, to simplify the implementation and to conserve memory space, a circular codebook 2^M samples long (128 samples) is used.

To reduce calculations, the gaussian values in the codebook are center-clipped. The values are originally chosen from a white gaussian process of variance 1. Then, any value with magnitude less than 1.2 is set to zero. This effectively sets about 75% of the values to zero, producing a codebook of impulses. This center-clipping of the codebook reduces the number of multiplications needed to perform the recursive convolution in the codebook search by a factor of 4, since multiplications by zero need not be performed. The codebook used in the current implementation is given below in Table VII.

TABLE VIII

0x0000	0x0000	0x0000	0x0000	0x2afe	0x0000	0x0000	0x0000
0x41de	0x0000	0x0000	0x0000	0x0000	0x0000	0x0000	0x0000
0x0000	0x0000	0x0000	0x0000	0x0000	0x3bb3	0x0000	0x363e
0x0000	0x0000	0x0000	0x0000	0x0000	0x0000	0x417d	0x0000
0x0000	0x0000	0x0000	0x0000	0x0000	0x0000	0x0000	0x0000
0x0000	0x0000	0x0000	0x0000	0x0000	0x9d8e	0x0000	0x0000
0x0000	0x0000	0x0000	0x0000	0x0000	0x0000	0x0000	0x0000
0x0000	0xc58a	0x0000	0x0000	0x0000	0x0000	0x0000	0x0000
0x0000	0xc8db	0xd365	0x0000	0x0000	0xd6a8	0x0000	0x0000
0x0000	0x3e53	0x0000	0x0000	0xd5ed	0x0000	0x0000	0x0000
0xd08b	0x0000	0x0000	0x0000	0x0000	0x3d14	0x396a	0x0000
0x0000	0x0000	0x0000	0x0000	0x0000	0x4ea7	0xd7ca	0x0000
0x0000	0x438c	0x0000	0x0000	0xad49	0x30b1	0x0000	0x0000
0x0000	0x0000	0x0000	0x0000	0x0000	0x0000	0x0000	0x0000
0x0000	0x0000	0x3fcd	0x0000	0x0000	0xd187	0x2e16	0xd09b
0xcb8d	0x0000	0x0000	0x0000	0x0000	0x0000	0x0000	0x32ff

Again, the speech coder utilizes a perceptual noise weighting filter of the form set forth in equation (1) which includes a weighted synthesis filter of the form set forth in equation (3). For each codebook index, I, the speech is synthesized and compared with the original speech. The error is weighted by the perceptual weighting filter before its MSE is calculated.

As stated previously, the objective is to minimize the error between x(n) and x'(n) over all possible values of I and G. The minimization of the error may be expressed by the following equation:

$$MSE = \frac{1}{L_C}\sum_{n=0}^{L_C-1}(x(n)-x'(n))^2 \qquad (39)$$

where L_C is the number of samples in the codebook subframe. Equation (38) may be rewritten with respect to G where:

$$MSE = \frac{1}{L_C} \sum_{n=0}^{L_C-1} (x(n) - Gy(n))^2 \quad (40)$$

where y is derived by convolving the impulse response of the formant filter with the Ith code vector, assuming that G=1. Minimizing the MSE is, in turn, equivalent to maximizing:

$$E_I = \frac{(E_{xy})^2}{E_{yy}} \quad (41)$$

where,

$$E_{xy} = \sum_{n=0}^{L_C-1} x(n)y(n) \quad (42)$$

and

$$E_{yy} = \sum_{n=0}^{L_C-1} y(n)y(n) \quad (43)$$

The optimum G for the given I is found according to the following equation:

$$G_I = \frac{E_{xy}}{E_{yy}} \quad (44)$$

This search is repeated for all allowed values of I. In contrast to the pitch search, the optimum gain, G, is allowed to be both positive or negative. Finally the index, I, and the codebook gain, G, that maximize E_I are chosen for transmission.

Again it should be noted that x(n), the perceptually weighted difference between the input speech and the ZIR of the weighted pitch and formant filters, needs to be computed only once. However, y(n), the zero state response of the pitch and formant filters for each code vector, needs to be computed for each index I. Because a circular codebook is used, the method of recursive convolution described for pitch search can be used to minimize the computation required.

Referring again to FIG. 15, the encoder includes a duplicate of the decoder of FIG. 5, decoder subsystem 235 of FIG. 7 in which the filter states are computed wherein: M_p is the memory in the pitch synthesis filter 550; M_a is the memory in the formant synthesis filter 552; and M_w is the memory in the perceptual weighting filter 556.

The filter states M_p and M_a, respectively from from decoder subsystem pitch synthesis and formant filters 550 and 552 (FIG. 15) are provided to codebook search subsystem 230 of FIG. 7. In FIG. 17, the filter states M_p and M_a are provided to zero impulse response (ZIR) filter 620 which computes the ZIR of pitch and formant synthesis filters 550 and 552. The computed ZIR of the pitch and formant synthesis filters is subtracted from the input input speech samples s(n) in adder 622 with the the result weighted by the perceptual weighting filter 624. The output from perceptual weighting filter 564, $x_c(n)$, is used as the weighted input speech in the above MSE equations (39)–(44) where $x(n) = x_c(n)$.

FIG. 17, the impulse response h(n) of the formant filter is computed in filter 626 and output to shift register 628. The impulse response of the formant filter h(n), is computed for each codebook subframe. To further reduce the computational requirements, the impulse response h(n) of the formant filter is truncated to 20 samples.

Shift register 628 along with multiplier 630, adder 632 and shift register 634 are configured to perform the recursive convolution between the values h(n) from shift register 628 and the values c(m) from codebook 636 which contains the codebook vectors as discussed above. This convolution operation is performed to find the zero-state response (ZSR) of the formant filter to each code vector, assuming that the codebook gain is set to 1. In operation of the convolution circuitry, n cycles from L_C to 1 for each m, while m cycles from 1 to 256. In register 586 data is not forwarded when n=1 and data is not latched in when n=L_C. Data is provided as an output from the convolution circuitry when m≦1. It should be noted that the convolution circuitry must be initialized to conduct the recursive convolution operation by cycling m subframe size times before starting the correlation and comparison circuitry which follow the convolution circuitry.

The correlation and comparison circuitry conducts the actual codebook search to yield the codebook index I and codebook gain G values. The correlation circuitry, also referred to as the mean square error (MSE) circuitry, computes the auto and cross-correlation of the ZSR with the perceptually weighted difference between the ZIR of the pitch and formant filters, and the input speech x'(n). In other words the correlation circuitry computes the value of the codebook gain G for each value of the codebook index I. The correlation circuitry is comprised of shift register 638, multipliers 640 and 642, adders 644 and 646, registers 648 and 650, and divider 652. In the correlation circuitry computations are such that n cycles from L_C to 1 while m cycles from 1 to 256.

The correlation circuitry is followed by comparison circuitry which performs the comparisons and storing of data in order to determine the optimum value of codebook index I and gain G. The comparison circuitry is comprised of multiplier 654; comparator 656; registers 658, 660 and 662; and quantizer 664. The comparison circuitry provides for each codebook subframe the values for I and G which minimize the error between the synthesized speech and the input speech. The codebook gain G is quantized in quantizer 614 which DPCM codes the values during quantization in a manner similar to the bias removed LSP frequency quantization and coding as described with reference to FIG. 12. These values for I and G are then provided to data buffer 222.

In the quantization and DPCM encoding of the codebook gain G is computed in accordance with the following equation:

$$\text{Quantized } G_i = 20 \log G_i - 0.45(20 \log G_{i-1} + 20 \log G_{i-2}) \quad (45)$$

where 20 log G_{i-1} and 20 log G_{i-2} are the respective values computed for the immediately previous frame (i–1) and the frame preceding the immediately previous frame (i–2).

The LSP, I, G, L and b values along with the rate are provided to data packing subsystem 236 where the data is arranged for transmission. In one implementation the LSP, I, G, L and b values along with the rate may be provided to decoder 234 via data packing subsystem 236. In another implementation these values may be provided via data buffer 222 to decoder 234 for use in the pitch search. However in the preferred embodiment protection of the codebook sign bit is employed within data packing subsystem 236 which may affect the codebook index. Therefore this protection must be taken into account should I and G data be provided directly from data buffer 222.

In data packing subsystem 236 the data may be packed in accordance with various formats for transmission. FIG. 18 illustrates an exemplary embodiment of the functional elements of data packing subsystem 236. Data packing subsystem 236 is comprised of pseudorandom generator (PN) 670, cyclic redundancy check (CRC) computational element

672, data protection logic 674 and data combiner 676. PN generator 670 receives the rate and for eighth rate generates a 4-bit random number that is provided to data combiner 676. CRC element 672 receives the codebook gain and LSP values along with the rate, and for full rate generates an 11-bit internal CRC code that is provided to data combiner 676.

Data combiner 674 receives the random number; CRC code; and along with the rate and LSP, I, G, L and b values from data buffer 222 (FIG. 7b) provides an output to transmission channel data processor subsystem 234. In the implementation where the data is provided directly from data buffer 222 to decoder 234 at a minimum the PN generator 4-bit number is provided from PN generator 670 via data combiner 676 to decoder 234. At full rate the CRC bits are included along with the frame data as output from data combiner 674, while at eighth rate the codebook index value is dropped and replaced by the random 4-bit number.

In the exemplary embodiment it is preferred that protection be provided to the codebook gain sign bit. Protection of this bit is to make the vocoder decoder less sensitive to a single bit error in this bit. If the sign bit were changed due to an undetected error, the codebook index would point to a vector unrelated to the optimum. In the error situation without protection, the negative of the optimum vector would be selected, a vector which is in essence the worst possible vector to be used. The protection scheme employed herein ensures that a single bit error in the gain sign bit will not cause the negative of the optimum vector to be selected in the error situation. Data protection logic 674 receives the codebook index and gain and examines the sign bit of the gain value. If the gain value sign bit is determined to be negative the value 89 is added, mod 128, to the associated codebook index. The codebook index whether or not modified is output from data protection logic 674 to data combiner 676.

In the exemplary embodiment it is preferred that at full rate, the most perceptually sensitive bits of the compressed voice packet data are protected, such as by an internal CRC (cyclic redundancy check). Eleven extra bits are used to perform this error detection and correction function which is capable of correcting any single error in the protected block. The protected block consists of the most significant bit of the 10 LSP frequencies and the most significant bit of the 8 codebook gain values. If an uncorrectable error occurs in this block, the packet is discarded and an erasure, described later, is declared. Otherwise, the pitch gain is set to zero but the rest of the parameters are used as received. In the exemplary embodiment a cyclic code is chosen to have a generator polynomial of:

$$g(x)=1+x^3+x^5+x^6+x^8+x^9+x^{10} \quad (46)$$

yielding a (31,21) cyclic code. However, it should be understood that other generator polynomials may be used. An overall parity bit is appended to make it a (32,21) code. Since there are only 18 information bits, the first 3 digits in the code word are set to zero and not transmitted. This technique provides added protection such that if the syndrome indicates an error in these positions, it means there is an uncorrectable error. The encoding of a cyclic code in systematic form involves the computation of parity bits as $x10\ u(x)$ modulo $g(x)$ where $u(x)$ is the message polynomial.

At the decoding end, the syndrome is calculated as the remainder from dividing the received vector by $g(x)$. If the syndrome indicates no error, the packet is accepted regardless of the state of the overall parity bit. If the syndrome indicates a single error, the error is corrected if the state of the overall parity bit does not check. If the syndrome indicates more than one error, the packet is discarded. Further details on such an error protection scheme can be found in section 4.5 of "Error Control coding: Fundamentals and Applications" by Lin and Costello for details of syndrome calculation.

In a CDMA cellular telephone system implementation the data is provided from data combiner 674 to transmission channel data processor subsystem 238 for data packing for transmission in 20 msec. data transmission frames. In a transmission frame in which the vocoder is set for full rate, 192 bits are transmitted for an effective bit rate of 9.6 kbps. The transmission frame in this case is comprised of one mixed mode bit used to indicate mixed frame type (0=voice only, 1=voice and data/signaling); 160 vocoder data bits along with 11 internal CRC bits; 12 external or frame CRC bits; and 8 tail or flush bits. At half rate, 80 vocoder data bits are transmitted along with 8 frame CRC bits and 8 tail bits for an effective bit rate of 4.8 kbps. At quarter rate, 40 vocoder data bits are transmitted along with 8 tail bits for an effective bit rate of 2.4 kbps. Finally, at eighth rate 16 vocoder data bits are transmitted along with 8 tail bits for an effective bit rate of 1.2 kbps.

Further details on the modulation employed in a CDMA system in which the vocoder of the present invention is to be employed are disclosed in copending U.S. patent application Ser. No. 07/543,496, filed Jun. 25, 1990, and entitled "SYSTEM AND METHOD FOR GENERATING SIGNAL WAVEFORMS IN A CDMA CELLULAR TELEPHONE SYSTEM", assigned to the Assignee of the present invention. In this system at rates other than full rate a scheme is employed in which the data bits are organized into groups with the bit groups psuedorandomly positioned within the 20 msec. data transmission frame. It should be understood that other frame rates and bit representations may readily be employed other than those presented for purposes of illustration herein with respect to the vocoder and the CDMA system implementation, such that other implementations are available for the vocoder and other system applications.

In the CDMA system, and also applicable to other systems, processor subsystem 238 on a frame by frame basis may interrupt transmission of vocoder data to transmit other data, such as signalling data or other non-speech information data. This particular type of transmission situation is referred to as "blank and burst". Processor subsystem 238 essentially replaces the vocoder data with the desired transmission data for the frame.

Another situation may arise where there is a desire to transmit both vocoder data and other data during the same data transmission frame. This particular type of transmission situation is referred to as "dim and burst". In a "dim and burst" transmission, the vocoder is provided with rate bound commands which set the vocoder final rate at the desired rate, such as half rate. The half rate encoded vocoder data is provided to processor subsystem 238 which inserts the additional data along with the vocoder data for the data transmission frame.

An additional function provided for full-duplex telephone links is a rate interlock. If one direction of the link is transmitting at the highest transmission rate, then the other direction of the link is forced to transmit at the lowest rate. Even at the lowest rate, sufficient intelligibility is available for the active talker to realize that he is being interrupted and to stop talking, thereby allowing the other direction of the link to assume the active talker role. Furthermore, if the active talker continues to talk over an attempted interruption, he will probably not perceive a degradation in

quality because his own speech "jams" the ability to perceive quality. Again by using the rate bound commands the vocoder can be set to vocode the speech at a lower than normal rate.

It should be understood that the rate bound commands can be used to set the the vocoder maximum rate at less than full rate when additional capacity in the CDMA system is needed. In a CDMA system in which a common frequency spectrum is used for transmission, one users signal appears as interference to other users in the system. System user capacity is thus limited by the total interference caused by system users. As the level of interference increases, normally due to an increase in users within the system, a degradation in quality is experienced by the users due to the increase in interference.

Each user's contribution to interference in the CDMA system is a function of the user's transmission data rate. By setting a vocoder to encode speech at a lower than normal rate, the encoded data is then transmitted at the corresponding reduced transmission data rate, which reduces the level of interference caused by that user. Therefore system capacity may be substantially increased by vocoding speech at a lower rate. As system demand increases, user vocoders may be commanded by the system controller or cell base station to reduce encoding rate. The vocoder of the present invention is of a quality such that there is very little, although some, perceptable difference between speech encoded at full and half rate. Therefore the effect in quality of communications between system users where speech is vocoded at a lower rate, such as half rate, is less significant than that caused by an increasing level of interference which results from an increased number of users in the system.

Various schemes may therefore be employed to set individual vocoder rate bounds for lower than normal vocoding rates. For example, all users in a cell may be commanded to encode speech at half rate. Such action substantially reduces system interference, with little effect in quality in communications between users, while providing a substantial increase in capacity for additional users. Until the total interference in the system is increased by the additional users to a level of degradation there is no impact in quality in communications between users.

As mentioned previously, the encoder includes a copy of the decoder in order to accomplish the analysis-by-synthesis technique in encoding the frames of speech samples. As illustrated in FIG. 7, decoder 234 receives the values L, b, I and I either via data packing subsystem 238 or data buffer 222 for reconstructing the synthesized speech for comparison with the input speech. The outputs from decoder are the values M_p, M_a, and M_w as discussed previously. Further details on decoder 234 as used in the encoder and in reconstructing the synthesized speech at the other end of the transmission channel may be discussed together with reference to FIGS. 19–24.

FIG. 19 is a flow diagram for an exemplary implementation of the decoder of the present invention. Due to a common structure of the decoder as implemented within the encoder, and at the receiver, these implementations are discussed together. The discussion with respect to FIG. 19 is primarily concerned with the decoder at the end of the transmission channel since data received thereat must be preprocessed in the decoder whereas in the encoder's decoder the appropriate data (rate, L, G, L and b) is received directly from data packing subsystem 238 or data buffer 222. However, the basic function of the decoder is the same for both encoder and decoder implementations.

As discussed with reference to FIG. 5, for each codebook subframe, the codebook vector specified by the codebook index I is retrieved from the stored codebook. The vector is multiplied by the codebook gain G and then filtered by the pitch filter for each pitch subframe to yield the formant residual. This formant residual is filtered by the formant filter and then passed through an adaptive formant postfilter and a brightness postfilter, along with automatic gain control (AGC) to produce the output speech signal.

Although the length of codebook and pitch subframe varies, decoding is done in 40 sample blocks for ease of implementation. The compressed data received is first unpacked into codebook gains, codebook indexes, pitch gains, pitch lags, and LSP frequencies. The LSP frequencies must be processed through their respective inverse quantizers and DPCM decoders as discussed with reference to FIG. 22. Similarly the codebook gain values must be processed in a similar manner to the LSP frequencies, except without the bias aspect. Also the pitch gain values are inverse quantized. These parameters are then provided for each decoding subframe. In each decoding subframe, 2 sets of codebook parameters (G & I), 1 set of pitch parameters (b & L), and 1 set of LPC coefficients are needed to generate 40 output samples. FIGS. 20 and 21 illustrate exemplary subframe decoding parameters for the various rates and other frame conditions.

For full rate frames, there are 8 sets of received codebook parameters and 4 sets of received pitch parameters. The LSP frequencies are interpolated four times to yield 4 sets of LSP frequencies. The parameters received and corresponding subframe information is listed in FIG. 20*a*.

For half rate frames, each set of the four received codebook parameters is repeated once, each set of the two received pitch parameters is repeated once. The LSP frequencies are interpolated three times to yield 4 sets of LSP frequencies. The parameters received and corresponding subframe information is listed in FIG. 20*b*.

For quarter rate frames, each set of the two received codebook parameters is repeated four times, the set of pitch parameters is also repeated four times. The LSP frequencies are interpolated once to yield 2 sets of LSP frequencies. The parameters received and corresponding subframe information is listed in FIG. 20*c*.

For eighth rate frames, the set of received codebook parameters is used for the entire frame. Pitch parameters are not present for eighth rate frames and the pitch gain is simply set to zero. The LSP frequencies are interpolated once to yield 1 set of LSP frequencies. The parameters received and corresponding subframe information is listed in FIG. 20*d*.

Occasionally, the voice packets may be blanked out in order for the CDMA cell or mobile station to transmit signalling information. When the vocoder receives a blank frame, it continues with a slight modification to the previous frame's parameters. The codebook gain is set to zero. The previous frame's pitch lag and gain are used as the current frame pitch lag and gain except that the gain is limited to one or less. The previous frame's LSP frequencies are used as is without interpolation. Note that the encoding end and the decoding end are still synchronized and the vocoder is able to recover from a blank frame very quickly. The parameters received and corresponding subframe information is listed in FIG. 21*a*.

In the event that a frame is lost due to a channel error, the vocoder attempts to mask this error by maintaining a fraction of the previous frame's energy and smoothly transitioning to background noise. In this case the pitch gain is set to zero; a random codebook is selected by using the previous subframe's codebook index plus 89; the codebook gain is

0.7 times the previous subframe's codebook gain. It should be noted that there is nothing magic about the number 89. this is just a convenient way of selecting a pseudorandom codebook vector. The previous frame's LSP frequencies are forced to decay toward their bias values as:

$$\omega_i 0.9 \text{ (previous } \omega_i \text{-bias value of } \omega_i) + \text{bias value of } \omega_i \quad (47)$$

The LSP frequency bias values are shown in Table 5. The parameters received and corresponding subframe information is listed in FIG. 21*b*.

If the rate cannot be determined at the receiver, the packet is discarded and an erasure is declared. However, if the receiver determines there is a strong likelihood the frame was transmitted at full rate, though with errors the following is done. As discussed previously at full rate, the most perceptually sensitive bits of the compressed voice packet data are protected by an internal CRC. At the decoding end, the syndrome is calculated as the remainder from dividing the received vector by g(x), from equation (46). If the syndrome indicates no error, the packet is accepted regardless of the state of the overall parity bit. If the syndrome indicates a single error, the error is corrected if the state of the overall parity bit does not check. If the syndrome indicates more than one error, the packet is discarded. If an uncorrectable error occurs in this block, the packet is discarded and an erasure is declared. Otherwise the pitch gain is set to zero but the rest of the parameters are used as received with corrections, as illustrated in FIG. 21*c*.

The postfilters used in this implementation were first described in "Real-Time Vector APC Speech Coding At 4800 BPS with Adaptive postfiltering" by J. H. Chen et al., Proc. ICASSP, 1987. Since speech formants are perceptually more important than spectral valleys, the postfilter boosts the formants slightly to improve the perceptual quality of the coded speech. This is done by scaling the poles of the formant synthesis filter radially toward the origin. However, an all pole postfilter generally introduces a spectral tilt which results in muffling of the filtered speech. The spectral tilt of this all pole postfilter is reduced by adding zeros having the same phase angles as the poles but with smaller radii, resulting in a postfilter of the form:

$$H(z) = \frac{A(z/\rho)}{A(z/\sigma)} \quad 0 < \rho < \sigma < 1 \quad (48)$$

where A(z) is the formant prediction filter and the values ρ and σ are the postfilter scaling factors where ρ is set to 0.5, and σ is set to 0.8.

An adaptive brightness filter is added to further compensate for the spectral tilt introduced by the formant postfilter. The brightness filter is of the form:

$$B(z) = \frac{1 - \kappa z^{-1}}{1 + \kappa z^{-1}} \quad (49)$$

where the value of κ (the coefficient of this one tap filter) is determined by the average value of the LSP frequencies which approximates the change in the spectral tilt of A(z).

To avoid any large gain excursions resulting from postfiltering, an AGC loop is implemented to scale the speech output so that it has roughly the same energy as the non-postfiltered speech. Gain control is accomplished by dividing the sum of the squares of the 40 filter input samples by the sum of the squares of the 40 filter output samples to get the inverse filter gain. The square root of this gain factor is then smoothed:

$$\text{Smoothed } \beta = 0.2 \text{ current } \beta + 0.98 \text{ previous } \beta \quad (50)$$

and then the filter output is multiplied with this smoothed inverse gain to produce the output speech.

In FIG. 19 the data from the channel along with the rate, either transmitted along with the data or derived by other means is provided to data unpacking subsystem **700**. In an exemplary implementation for a CDMA system a rate decision can be derived from the error rate is the received data when it is decoded at each of the different rates. In data unpacking subsystem **700**, at full rate a check of the CRC is made for errors with the result of this check provided to subframe data unpack subsystem **702**. Subsystem **700** provides an indication of abnormal frame conditions such as a blank frame, erasure frame or error frame with usable data to subsystem **702**. Subsystem **700** provides the rate along with the parameters I, G, L, and b for the frame to subsystem **702**. In providing the codebook index I and gain G values, the sign bit of the gain value is checked in subsystem **702**. If the sign bit is negative, the value 89 is subtracted, mod **128**, from the associated codebook index. Furthermore in subsystem the codebook gain is inverse quantized and DPCM decoded, while the pitch gain is inverse quantized.

Subsystem **700** also provides the rate and the LSP frequencies to LSP inverse quantization/interpolation subsystem **704**. Subsystem **700** further provides an indication of a blank frame, erasure frame or error frame with usable data to subsystem **704**. Decode subframe counter **706** provides an indication of the subframe count value i and j to both subsystems **702** and **704**.

In subsystem **704** the LSP frequencies are inverse quantized and interpolated. FIG. 22 illustrates an implementation of the inverse quantization portion of subsystem **704**, while the interpolation portion is substantially identical to that described with reference to FIG. 12. In FIG. 22, the inverse quantization portion of subsystem **704** is comprised of inverse quantizer **750**, which is constructed identical to that of inverse quantizer **468** of FIG. 12 and operates in a similar manner. The output of inverse quantizer **750** is provided as one input to adder **752**. The other input to adder **752** is provided as the output of multiplier **754**. The output of adder **752** is provided to register **756** where stored and output for multiplication with the constant 0.9 in multiplier **754**. The output from adder **752** is also provided to adder **758** where the bias value is added back into the LSP frequency. The ordering of the LSP frequencies is ensured by logic **760** which forces the LSP frequencies to be of a minimum separation. Generally the need to force separation does not occur unless an error occurs in transmission. The LSP frequencies are the interpolated as discussed with reference to FIG. 13 and with reference to FIGS. 20*a*–20*d* and 21*a*–21*c*.

Referring back to FIG. 19, memory **708** is coupled to subsystem **704** for storing previous frame LSPs, $\omega_{i,j-1}$, and may also be used to store the bias values $b\omega_i$. These previous frame values are used in the interpolation for all rates. For conditions of blanking, erasure or error frame with usable data, the previous LSPs $\omega_{i,j-1}$ are used in accordance with the chart in FIGS. 21*a*–21*c*. In response to a blank frame indication from subsystem **700**, subsystem **704** retrieves the previous frame LSP frequencies stored in memory **708** for use in the current frame. In response to an erasure frame indication, subsystem **704** again retrieves the previous frame LSP frequencies from memory **708** along with the bias values so as to compute the current frame LSP frequencies as discussed above. In performing this computation the stored bias value is subtracted from the previous frame LSP frequency in an adder, with the result multiplied in a multiplier by a constant value of 0.9 with this result added in an adder to the stored bias value. In response to an error

frame with usable data indication, the LSP frequencies are interpolated as was for full rate if the CRC passes.

The LSPs are provided to LSP to LPC transformation subsystem 710 where the LSP frequencies are converted back to LPC values. Subsystem 710 is substantially identical to LSP to LPC transformation subsystems 218 and 228 of FIG. 7 and as described with reference to FIG. 13. The LPC coefficients α_i are then provided to both formant filter 714 and formant postfilter 716. The LSP frequencies are also averaged over the subframe in LSP averager subsystem 712 and provided to adaptive brightness filter 718 as the value κ.

Subsystem 702 receives the parameters I, G, L, and b for the frame from subsystem 700 along with the rate or abnormal frame condition indication. Subsystem 702 also receives from subframe counter 706 the j counts for each i count in each decode subframe 1–4. Subsystem 702 is also coupled to memory 720 which stores the previous frame values for G, I, L and b for use in abnormal frame conditions. Subsystem 702 under normal frame conditions, except for eighth rate, provides the codebook index value I_j to codebook 722; the codebook gain value G_j to multiplier 724; and the pitch lag L and gain b values to pitch filter 726 in accordance with FIG. 20a–20d. For eighth rate since there is no value for the codebook index sent, a packet seed which is the 16-bit parameter value (FIG. 2d) for eighth rate is provided to codebook 722 along with a rate indication. For abnormal frame conditions the values are provided from subsystem 702 in accordance with FIGS. 21a–21c. Furthermore for eighth rate, an indication is provided to codebook 722 as is discussed with reference to FIG. 23.

In response to a blank frame indication from subsystem 700, subsystem 702 retrieves the previous frame pitch lag L and gain b values, except the gain is limited to one or less, stored in memory 708 for use in the current frame decode subframes. Furthermore no codebook index I is provided and the codebook gain G is set to zero. In response to an erasure frame indication, subsystem 702 again retrieves the previous frame subframe codebook index from memory 720 and adds in an adder the value of 89. The previous frame subframe codebook gain is multiplied in a multiplier by the constant 0.7 to produce the respective subframe values of G. No pitch lag value is provided while the pitch gain is set to zero. In response to an error frame with usable data indication, the codebook index and gain are used as in a full rate frame, provided the CRC passes, while no pitch lag value is provided and the pitch gain is set to zero.

As discussed with reference to the encoder's decoder in the analysis-by-synthesis technique, the codebook index I is used as the initial address for the codebook value for output to multiplier 724. The codebook gain value is multiplied in multiplier 724 with the output value from codebook 722 with the result provided to pitch filter 726. Pitch filter 726 uses the input pitch lag L and gain b values to generate the formant residual which is output to formant filter 714. In formant filter 714 the LPC coefficients are used in filtering the formant residual so as to reconstruct the speech. At the receiver decoder the reconstructed speech is further filtered by formant postfilter 716 and adaptive brightness filter 718. AGC loop 728 is used at the output of formant filter 714 and formant postfilter 716 with output thereof multiplied in multiplier 730 with the output of adaptive brightness filter 718. The output of multiplier 730 is the reconstructed speech which is then converted to analog form using known techniques and presented to the listener. In the encoders decoder, the perceptual weighting filter is placed at the output in order to update its memories.

Referring to FIG. 22, further details of the implementation of the decoder itself are illustrated. In FIG. 22 codebook 722 is comprised of memory 750 similar to that described with reference to FIG. 17. However for purposes of explanation a slightly different approach is illustrated for memory 750 and the addressing thereof is illustrated in FIG. 22. Codebook 722 is further comprised of switch 752, multiplexer 753 and pseudorandom number (PN) generator 754. Switch 752 is responsive to the codebook index for pointing to the index address location of memory 750, as was discussed with reference to FIG. 17. Memory 750 is a circular memory with switch 752 pointing to the initial memory location with the values shifted through the memory for output. The codebook values are output from memory 750 through switch 752 as one input to multiplexer 753. Multiplexer 753 is responsive to the rates of full, half and quarter for providing an output of the values provided through switch 752 to codebook gain amplifier, multiplier 724. Multiplexer 753 is also responsive to the eighth rate indication for selecting the output of PN generator 754 for the output of codebook 722 to multiplier 724.

In order to maintain high voice quality in CELP coding, the encoder and decoder must have the same values stored in their internal filter memories. This is done by transmitting the codebook index, so that the decoder's and encoder's filters are excited by the same sequence of values. However, for the highest speech quality these sequences consist of mostly zeroes with some spikes distributed among them. This type of excitation is not optimum for coding background noise.

In coding background noise, done at the lowest data rate, a pseudorandom sequence may be implemented to excite the filters. In order to ensure that the filter memories are the same in the encoder and decoder, the two pseudorandom sequences must be the same. A seed must be transmitted somehow to the receiver decoder. Since there are no additional bits that could be used to send the seed, the transmitted packet bits can be used as the seed, as if they made up a number. This technique can be done because, at the low rate, the exact same CELP analysis by synthesis structure to determine the codebook gain and index is used. The difference is that the codebook index is thrown out, and the encoder filter memories are instead updated using a pseudorandom sequence. Therefore the seed for the excitation can be determined after the analysis is done. In order to ensure that the packets themselves do not periodically cycle between a set of bit patterns, four random bits are inserted in the eighth rate packet in place of the codebook index values. Therefore the packet seed is the 16-bit value as referenced in FIG. 2d.

PN generator 754 is constructed using well known techniques and may be implemented by various algorithms. In the exemplary embodiment the algorithm employed is of a nature as described in the article "DSP chips can produce random numbers using proven algorithm" by Paul Mennen, EDN, Jan. 21, 1991. The transmitted bit packet is used as the seed (from subsystem 700 of FIG. 18) for generating the sequence. In one implementation the seed is multiplied by the value 521 with the value 259 added thereto. From this resulting value the least significant bits are used as a signed 16 bit number. This value is then used as the seed in generating the next codebook value. The sequence generated by the PN generator is normalized to have a variance of 1.

Each value output from codebook 722 is multiplied in multiplier 724 by the codebook gain G as provided during the decode subframe. This value is provided as one input to adder 756 of pitch filter 726. Pitch filter 726 is further comprised of multiplier 758 and memory 760. The pitch lag L determines the position of a tap of memory 760 that is

output to multiplier 758. The output of memory 760 is multiplied in multiplier 758 with the pitch gain value b with the result output to adder 756. The output of adder 756 is provided to an input of memory 760 which is a series of delay elements such as a shift register. The values are shifted through memory 760 (in a direction as indicated by the arrow) and provided at the selected tap output as determined by the value of L. Since the values are shifted through memory 760, values older than 143 shifts are discarded. The output of adder 756 is also provided as an input to formant filter 714.

The output of adder 756 is provided to one input of adder 762 of formant filter 714. Formant filter 714 is further comprised of bank of multipliers 764*a*–764*j* and memory 766. The output of adder 762 is provided as an input to memory 766 which is also constructed as a series of tapped delay elements such as a shift register. The values are shifted through memory 766 (in a direction as indicated by the arrow) and are dumped at the end. Each element has a tap which provides the value stored there as an output to a corresponding one of multipliers 764*a*–764*j*. Each one of one of multipliers 764*a*–764*j* also receives a respective one of the LPC coefficients α_1–α_{10} for multiplication with the output from memory 766. The output from adder 762 is provided as an output of formant filter 714.

The output of formant filter 714 is provided as an input to formant postfilter 716 and AGC subsystem 728. Formant postfilter 716 is comprised of adders 768 and 770 along with memory 772 and multipliers 774*a*–774*j*, 776*a*–776*j*, 780*a*–780*j*, and 782*a*–782*j*. As the values are shifted through memory 772 they are output at the corresponding taps for multiplication with the scaled LPC coefficient values for summation in adders 768 and 770. The output from formant postfilter 716 is provided as an input to adaptive brightness filter 718.

Adaptive brightness filter 718 is comprised of adders 784 and 786, registers 788 and 790, and multipliers 792 and 794. FIG. 24 is a chart illustrating the characteristics of the adaptive brightness filter. The output of formant postfilter 716 is provided as one input to adder 784 while the other input is provided from the output of multiplier 792. The output of adder 784 is provided to register 788 and stored for one cycle and output during the next cycle to multipliers 792 and 794 along with the value $-\kappa$ provided from LSP averager 712 of FIG. 19. The output from multipliers 792 and 794, are provided both to adders 784 and 786. The output from adder 786 is provided to AGC subsystem 728 and to shift register 790. Register 790 is used as a delay line to ensure coordination in the data output from formant filter 714 to AGC subsystem 728 and provided to adaptive brightness filter 718 via formant postfilter 716.

AGC subsystem 728 receives the data from formant postfilter 716 and adaptive brightness filter 718 so as to scale the speech output energy to about that of the speech input to formant postfilter 716 and adaptive brightness filter 718. AGC subsystem 728 is comprised of multipliers 798, 800, 802 and 804; adders 806, 808 and 810; register 812, 814 and 816; divider 818; and square root element 820. The 40 sample output from formant postfilter 716 is squared in multiplier 798 and summed in an accumulator comprised of adder 806 and register 812 to produce the value "x". Similarly the 40 sample output from adaptive brightness filter 718, taken prior to register 790, is squared in multiplier 800 and summed in an accumulator comprised of adder 808 and register 814 to produce the value "y". The value "y" is divided by the value "x" in divider 816 to result in the inverse gain of the filters. The square root of the inverse gain factor is taken in element 818 with the result thereof smoothed. The smoothing operation is accomplished by multiplying the current value gain G by the constant value 0.02 in multiplier 802 with this result added in adder 810 to the result of 0.98 times the previous gain as computed using register 820 and multiplier 804. The output of filter 718 is then multiplied with the smoothed inverse gain in multiplier 730 to provide the output reconstructed speech. The output speech is the converted to analog form using the various well known conversion techniques for output to the user.

It should be understood the the embodiment of the present invention as disclosed herein is but an exemplary embodiment and that variations in the embodiment may be realized which are the functional equivalent. The present invention may be implemented in a digital signal processor under appropriate program control the provide the functional operation as disclosed herein to encode the speech samples and decode the encoded speech. In other implementations the present invention may be embodied in an application specific integrated circuit (ASIC) using well known very large scale integration (VLSI) techniques.

The previous description of the preferred embodiments is provided to enable any person skilled in the art to make or use the present invention. The various modifications to these embodiments will be readily apparent to those skilled in the art, and the generic principles defined herein may be applied to other embodiments without the use of the inventive faculty. Thus, the present invention is not intended to be limited to the embodiments shown herein but is to be accorded the widest scope consistent with the principles and novel features disclosed herein.

We claim:

1. An apparatus for masking frame errors comprising:

memory means for storing at least one previous frame of data and for providing said at least one previous frame of data in response to a frame error signal; and

masking means for receiving said frame error signal and for generating a masking signal in accordance with said at least one previous frame of data and a predetermined error masking format.

2. The apparatus of claim 1 wherein said at least one previous frame of data comprises a last frame of data capable of being decoded.

3. The apparatus of claim 2 wherein said error masking format comprises attenuating the gain of said last frame of data capable of being decoded.

4. The apparatus of claim 1 wherein said error masking format comprises attenuating the gain of said at least one previous frame of data.

5. A method for masking frame errors comprising:

storing at least one previous frame of data;

providing said at least one previous frame of data in response to a frame error signal; and

generating a masking signal in accordance with said at least one previous frame of data and a predetermined error masking format.

6. The apparatus of claim 5 wherein said at least one previous frame of data comprises a last frame of data capable of being decoded.

7. The apparatus of claim 6 wherein said error masking format comprises attenuating the gain of said last frame of data capable of being decoded.

8. The apparatus of claim 5 wherein said error masking format comprises attenuating the gain of said at least one previous frame of data.

* * * * *

US005655220A

United States Patent [19]

Weiland et al.

[11] Patent Number: 5,655,220

[45] Date of Patent: Aug. 5, 1997

[54] **REVERSE LINK, TRANSMIT POWER CORRECTION AND LIMITATION IN A RADIOTELEPHONE SYSTEM**

[75] Inventors: **Ana L. Weiland**, Encinitas; **Richard K. Kornfeld**; **John E. Maloney**, both *of San Diego, all of Calif.*

[73] Assignee: **Qualcomm Incorporated**, San Diego, Calif.

[21] Appl. No.: **532,383**

[22] Filed: **Sep. 22, 1995**

Related U.S. Application Data

[60] Continuation of Ser. No. 406,432, Mar. 20, 1995, abandoned, which is a division of Ser. No. 203,151, Feb. 28, 1994, Pat. No. 5,452,473.

[51] Int. Cl.[6] H04B 7/00; H04Q 7/32

[52] U.S. Cl. 455/69; 455/126; 455/115; 375/345; 370/318

[58] Field of Search 455/33.1, 69, 70, 455/126, 127, 115, 117, 116, 54.1, 54.2, 67.1, 63, 67.6, 88; 330/129, 132, 136, 278, 85, 75, 282; 375/200, 205, 296, 297, 345; 370/318, 320, 335, 310

[56] **References Cited**

U.S. PATENT DOCUMENTS

4,870,698	9/1989	Katsuyama et al.	455/69
5,056,109	10/1991	Gilhousen et al.	455/69
5,129,098	7/1992	McGirr et al.	455/69
5,257,283	10/1993	Gilhousen et al.	455/69
5,267,262	11/1993	Wheatley, III	455/69
5,278,992	1/1994	Su et al.	455/127
5,278,994	1/1994	Black et al.	455/115
5,297,161	3/1994	Ling	455/69
5,452,473	9/1995	Weiland et al.	455/88
5,590,408	12/1996	Weiland et al.	455/69

FOREIGN PATENT DOCUMENTS

9107037	5/1991	WIPO .
9302505	2/1993	WIPO .

OTHER PUBLICATIONS

Samir Soliman et al., "CDMA Reverse Link Open Loop Power Control", *IEEE*, Dec. 6, 1992, pp. 69–73.

Primary Examiner—Reinhard J. Eisenzopf
Assistant Examiner—Doris To
Attorney, Agent, or Firm—Russell B. Miller; Roger W. Martin

[57] **ABSTRACT**

The process and apparatus of the present invention limits the output power of a radiotelephone, operating in a cellular system in the preferred embodiment. This ensures the transmitted sidebands and synthesizer phase noise remains within a certain specification. This is accomplished by power detection and a correction accumulator that together generate a gain control signal by limiting the gain adjustment to a maximum value, even when the cell site communicating with the radiotelephone is sending power turn-up commands to the radiotelephone. This process includes dynamically correcting the output level of the transmitter due to gain variations in the transmitter stages or gain control elements.

9 Claims, 9 Drawing Sheets

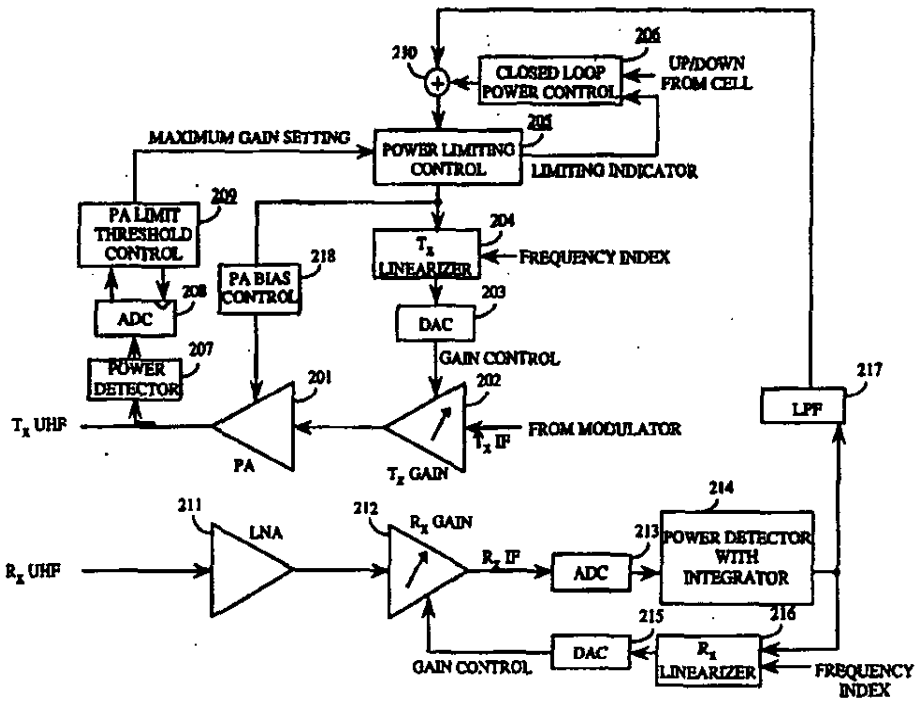

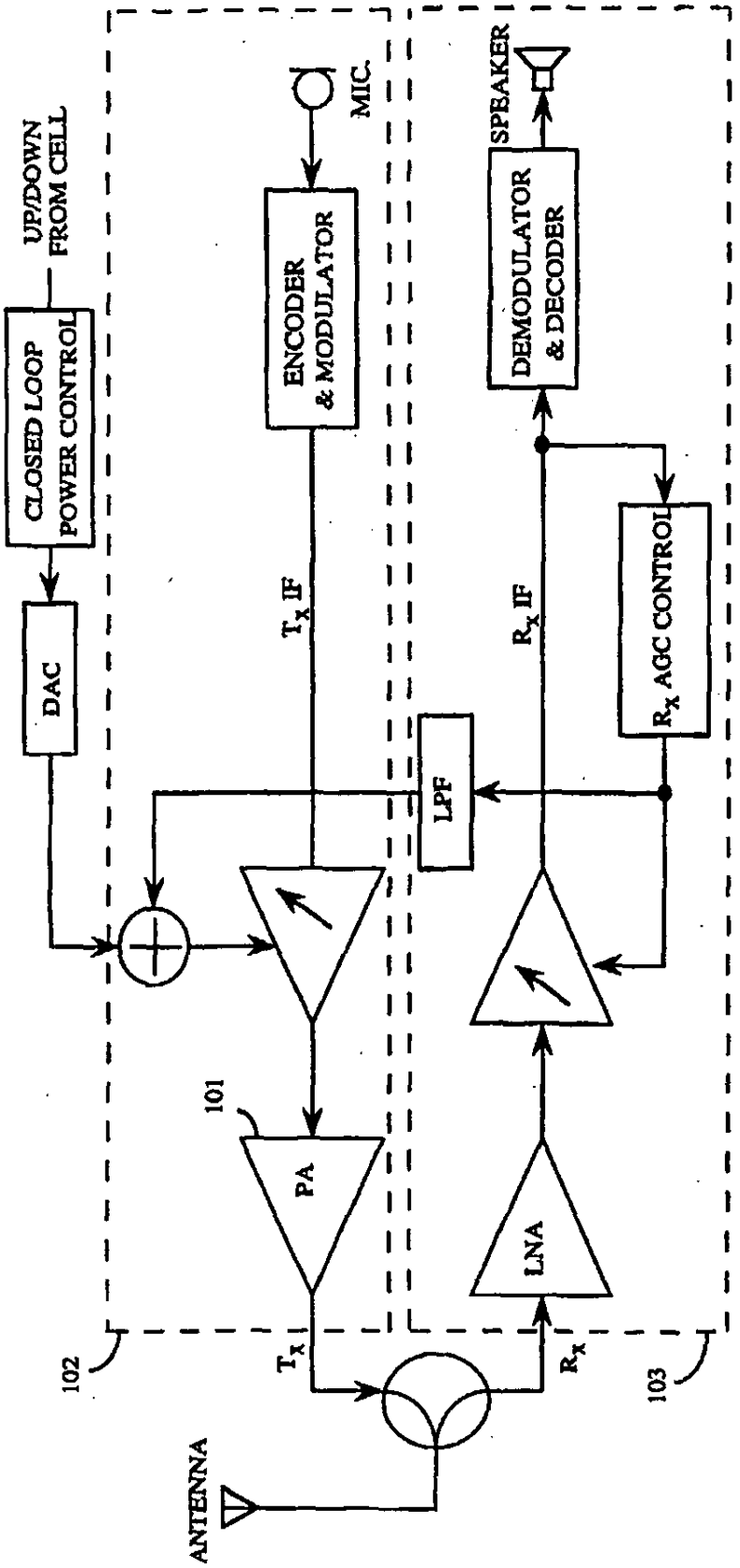

PRIOR ART

FIG. 1

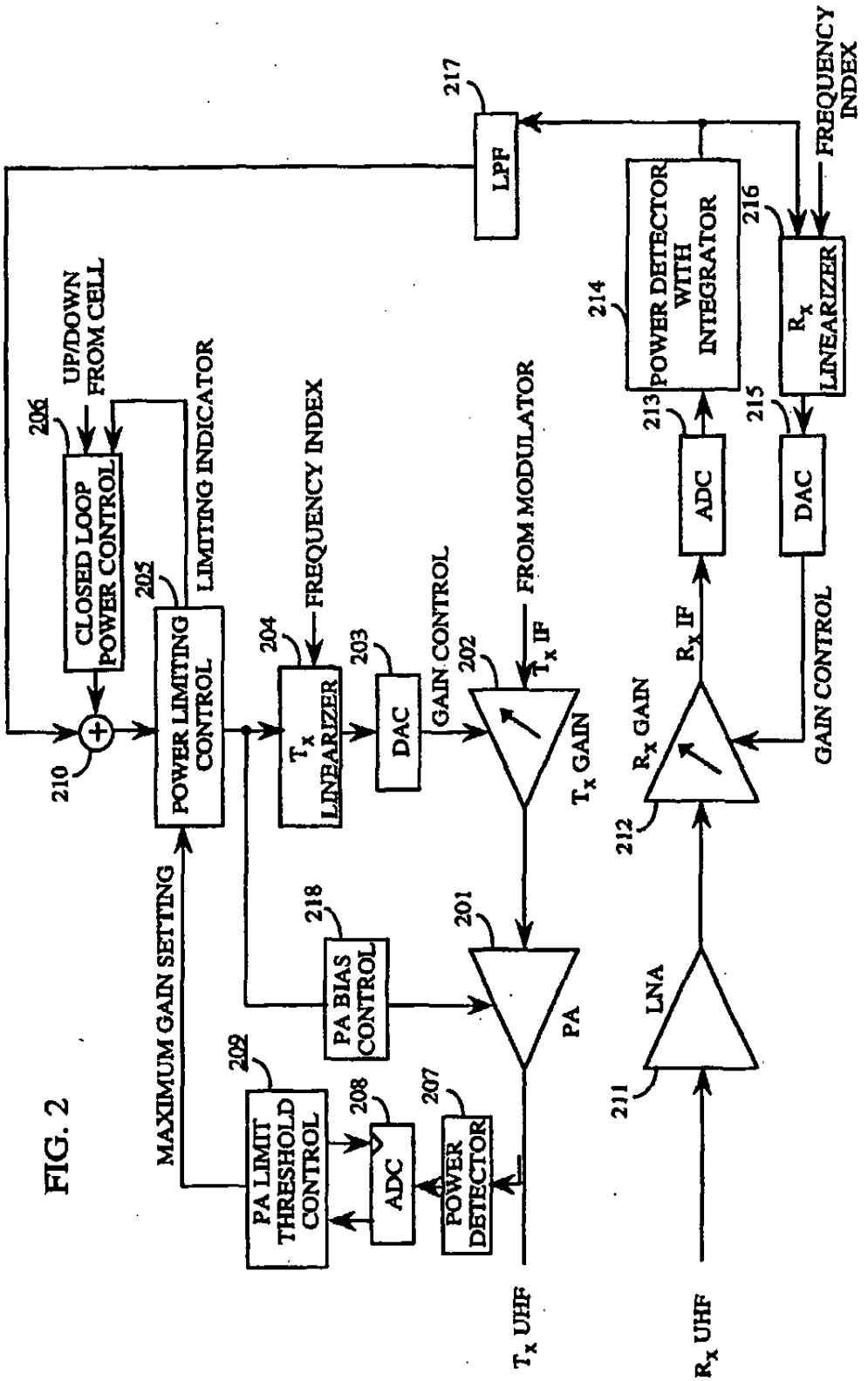
LPF
217
FREQUENCY INDEX
POWER DETECTOR WITH INTEGRATOR
214
R_X LINEARIZER
216
UP/DOWN FROM CELL
CLOSED LOOP POWER CONTROL
206
LIMITING INDICATOR
POWER LIMITING CONTROL
205
FREQUENCY INDEX
T_X LINEARIZER
204
DAC
203
GAIN CONTROL
FROM MODULATOR
T_X IF
202
ADC
213
DAC
215
R_X IF
R_X GAIN
GAIN CONTROL
210
T_X GAIN
212
MAXIMUM GAIN SETTING
PA BIAS CONTROL
218
PA
201
LNA
211
PA LIMIT THRESHOLD CONTROL
209
ADC
208
POWER DETECTOR
207
T_X UHF
R_X UHF

FIG. 2

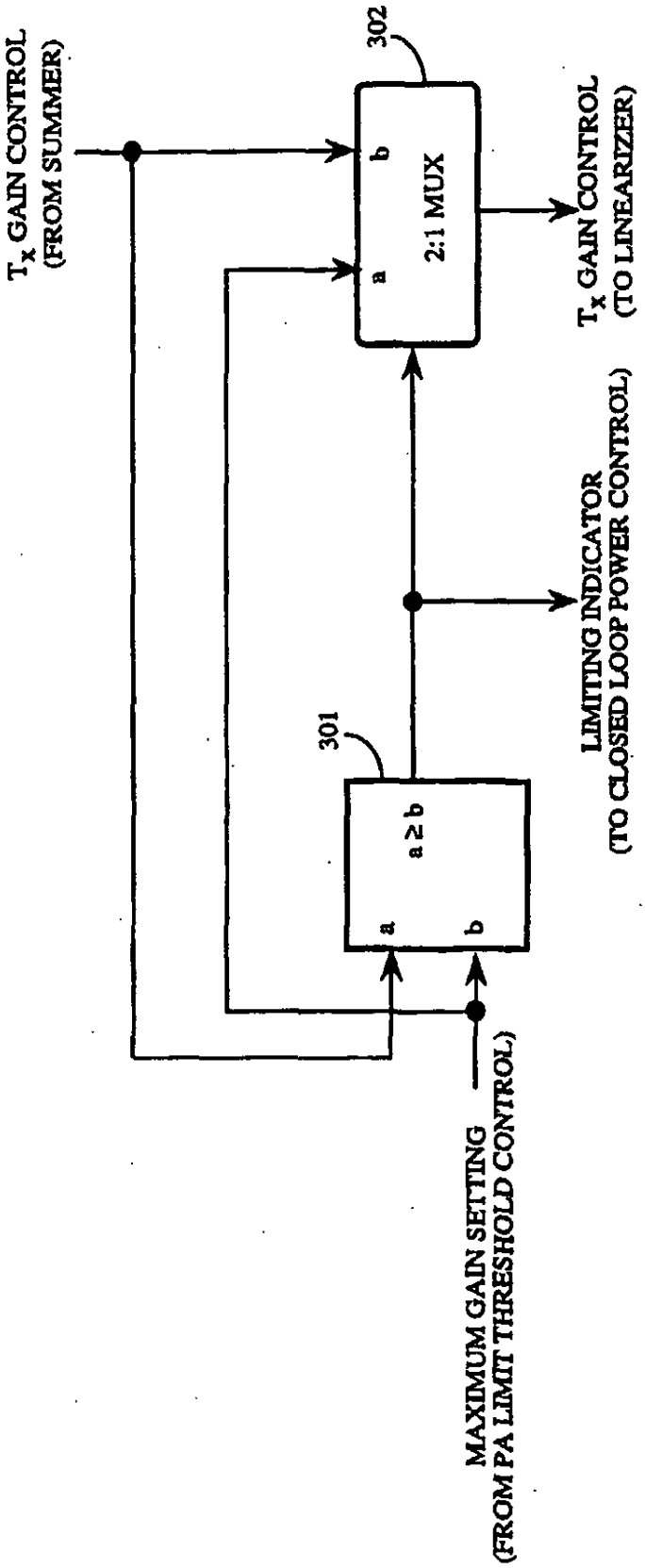
T_x GAIN CONTROL (FROM SUMMER)
302
b
2:1 MUX
a
T_x GAIN CONTROL (TO LINEARIZER)
LIMITING INDICATOR (TO CLOSED LOOP POWER CONTROL)
301
a ≥ b
a
b
MAXIMUM GAIN SETTING (FROM PA LIMIT THRESHOLD CONTROL)
205

FIG. 3

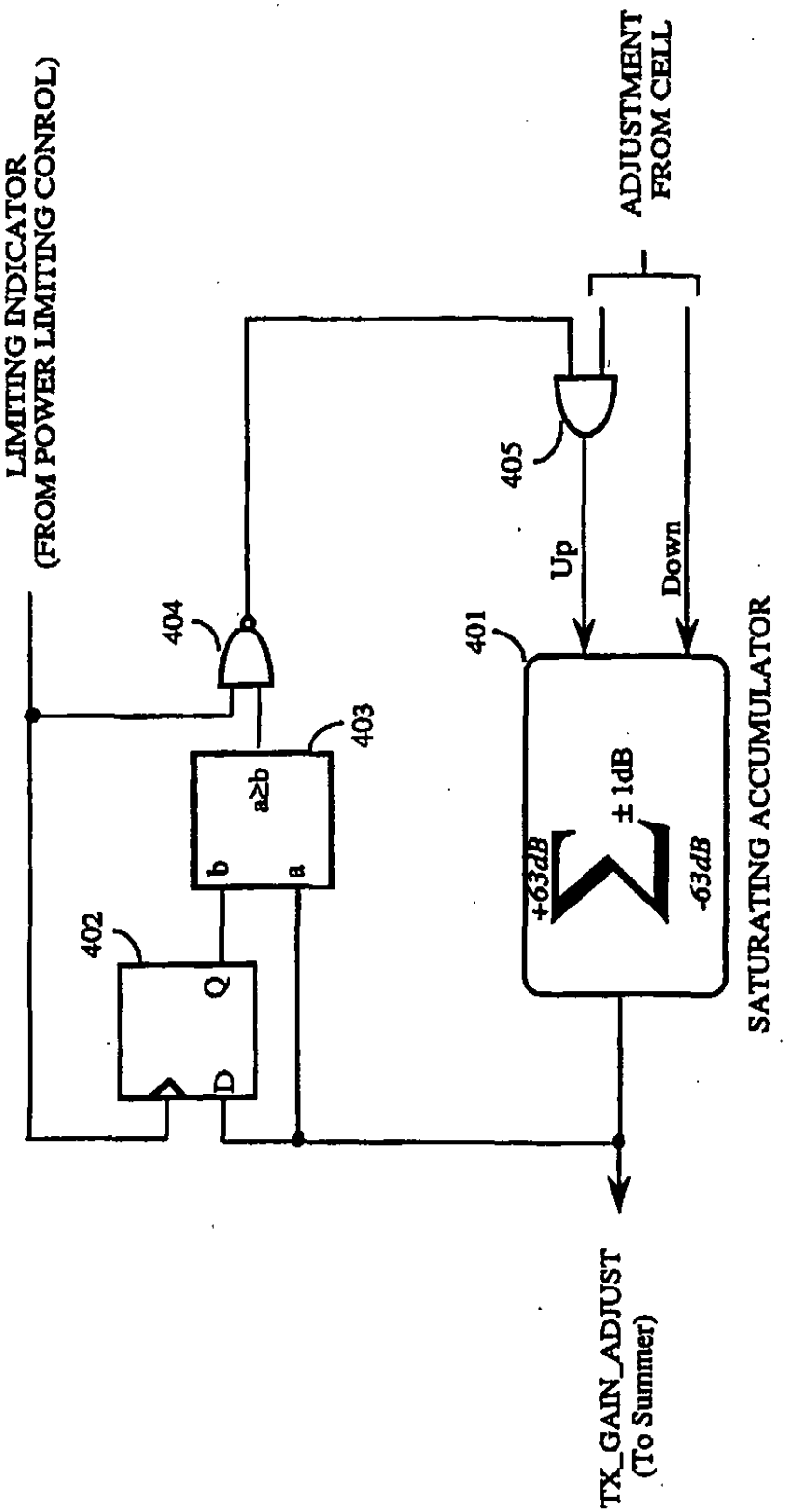
LIMITING INDICATOR
(FROM POWER LIMITING CONROL)
ADJUSTMENT
FROM CELL
405
Up
Down
404
401
403
a≥b
b
a
± 1dB
+63dB
-63dB
402
Q
D
SATURATING ACCUMULATOR
206
TX_GAIN_ADJUST
(To Summer)

FIG. 4

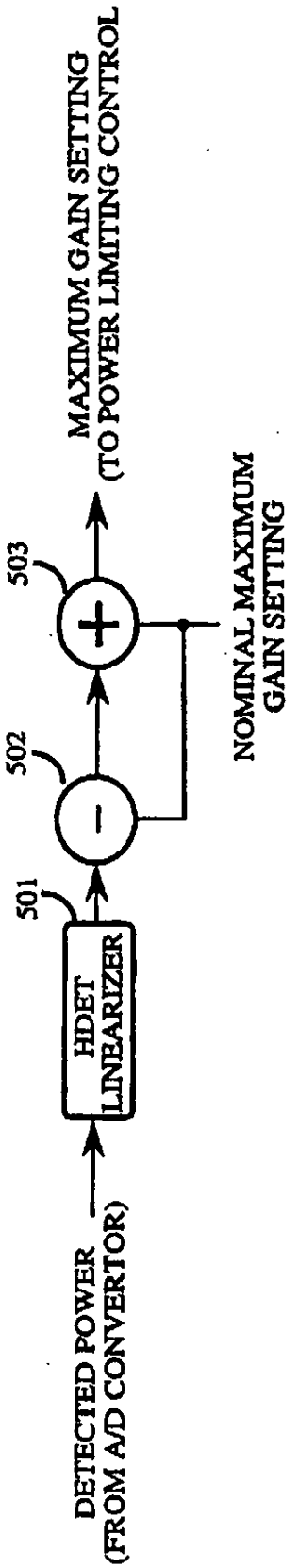
DETECTED POWER
(FROM A/D CONVERTOR)
HDET
LINEARIZER
501
502
503
NOMINAL MAXIMUM
GAIN SETTING
MAXIMUM GAIN SETTING
(TO POWER LIMITING CONTROL
209

FIG. 5

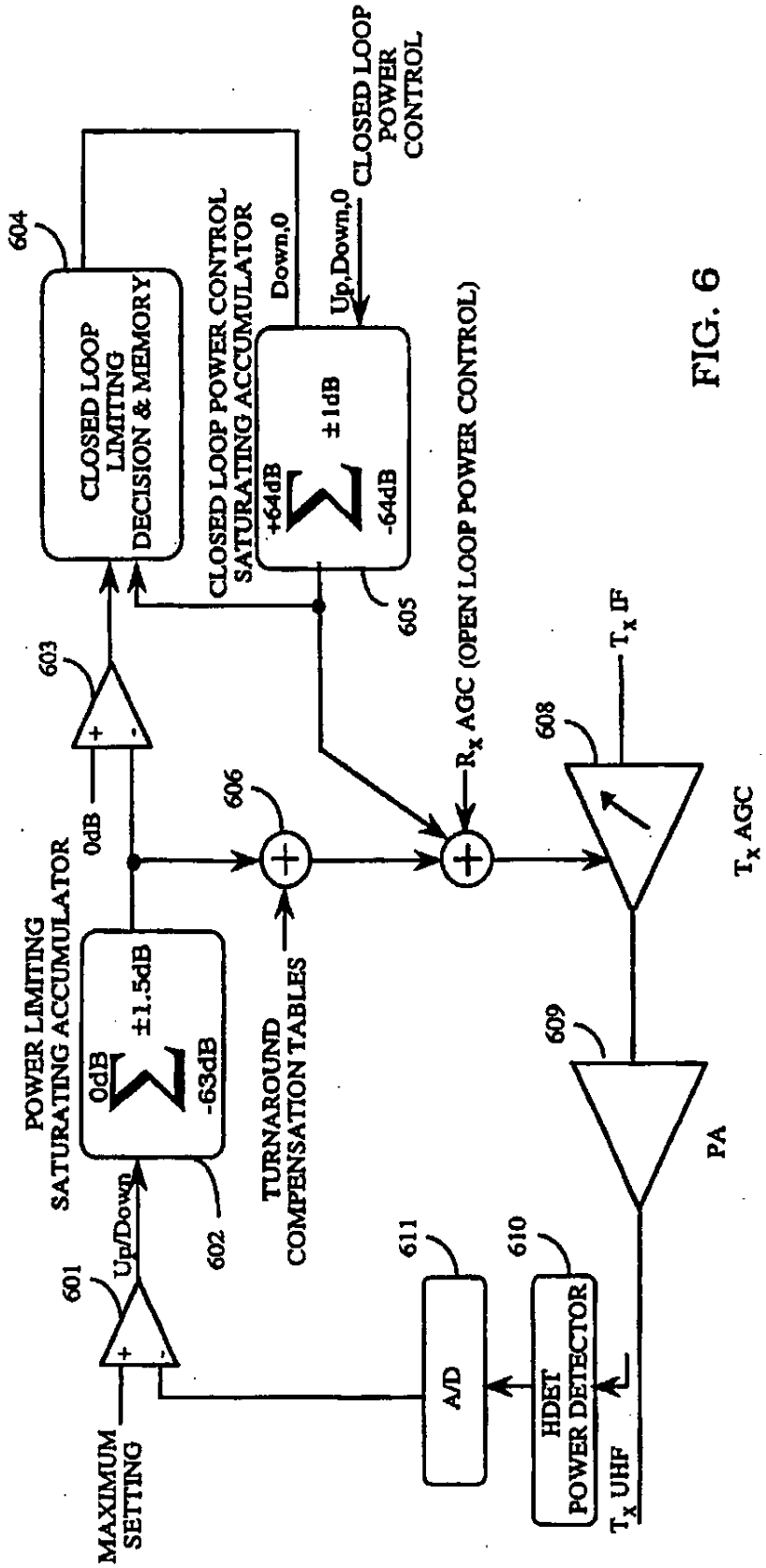
CLOSED LOOP POWER CONTROL
Up,Down,0
Down,0
604
CLOSED LOOP LIMITING DECISION & MEMORY
CLOSED LOOP POWER CONTROL SATURATING ACCUMULATOR
+64dB
±1dB
-64dB
605
603
0dB
606
R_x AGC (OPEN LOOP POWER CONTROL)
608
T_x IF
T_x AGC
POWER LIMITING SATURATING ACCUMULATOR
0dB
±1.5dB
-63dB
602
TURNAROUND COMPENSATION TABLES
609
PA
Up/Down
601
611
610
A/D
HDET POWER DETECTOR
MAXIMUM SETTING
T_x UHF

FIG. 6

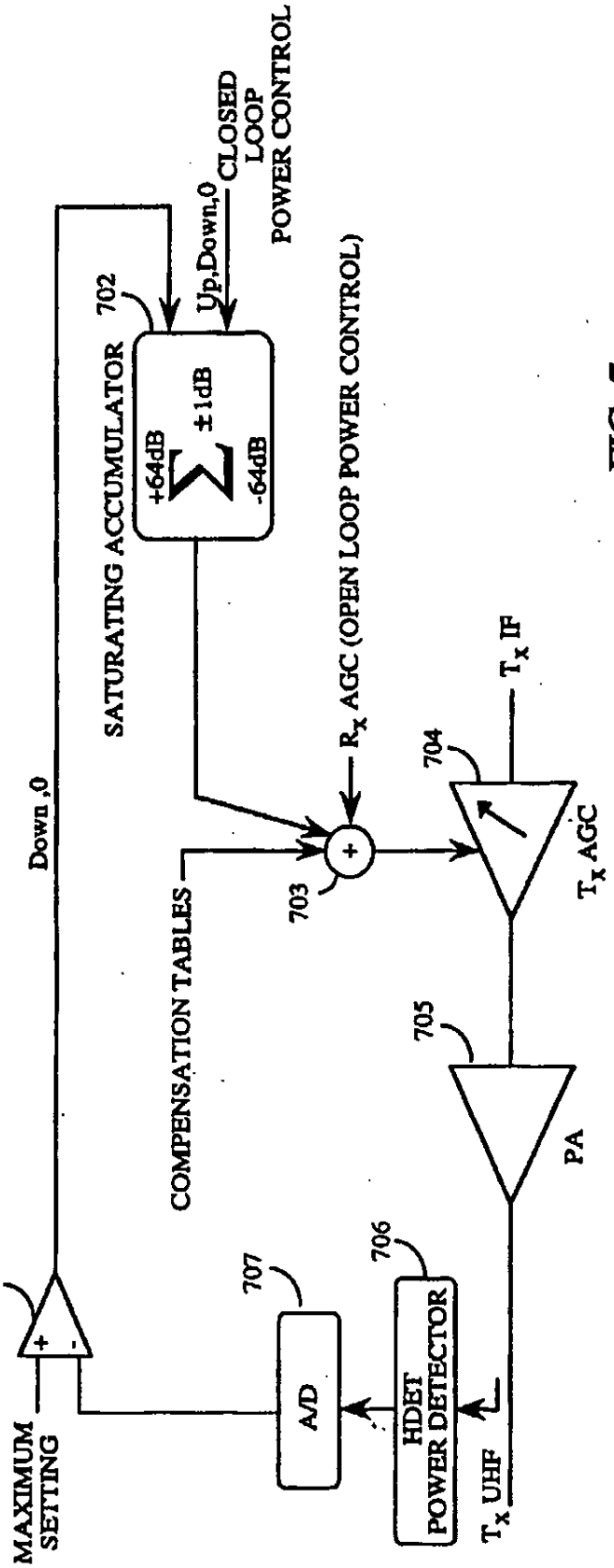
CLOSED LOOP POWER CONTROL
Up,Down,0
702
SATURATING ACCUMULATOR
+64dB
±1dB
-64dB
R_X AGC (OPEN LOOP POWER CONTROL)
T_X IF
704
T_X AGC
Down ,0
703
COMPENSATION TABLES
705
PA
701
707
706
A/D
HDET POWER DETECTOR
MAXIMUM SETTING
T_X UHF

FIG. 7

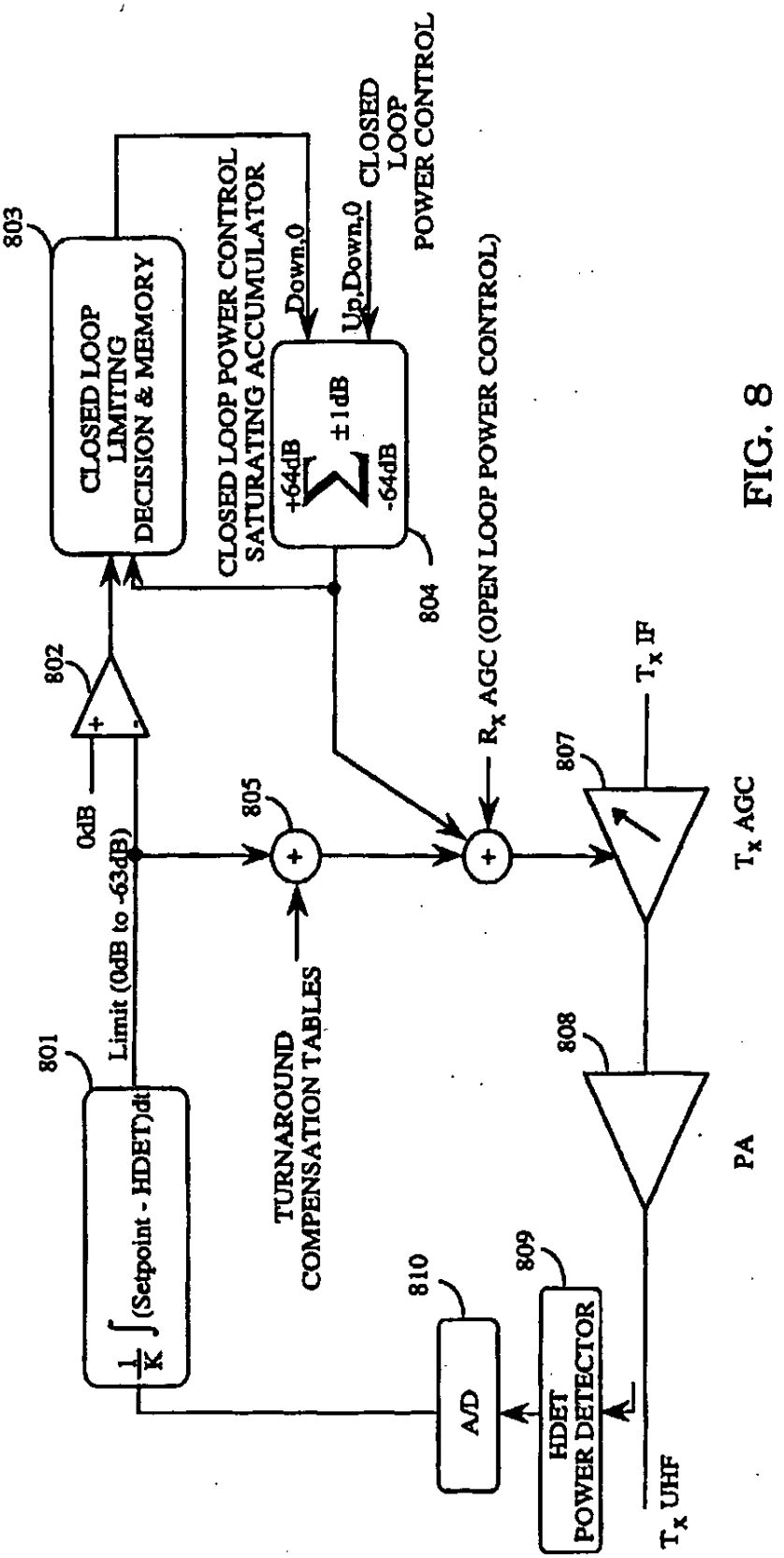
803
CLOSED LOOP LIMITING DECISION & MEMORY
CLOSED LOOP POWER CONTROL SATURATING ACCUMULATOR
Down,0
Up,Down,0
CLOSED LOOP POWER CONTROL
+64dB
±1dB
-64dB
804
802
0dB
805
R_X AGC (OPEN LOOP POWER CONTROL)
T_X IF
807
T_X AGC
Limit (0dB to -63dB)
801
$\frac{1}{K}\int$(Setpoint - HDET)dt
TURNAROUND COMPENSATION TABLES
808
PA
810
A/D
809
HDET POWER DETECTOR
T_X UHF

FIG. 8

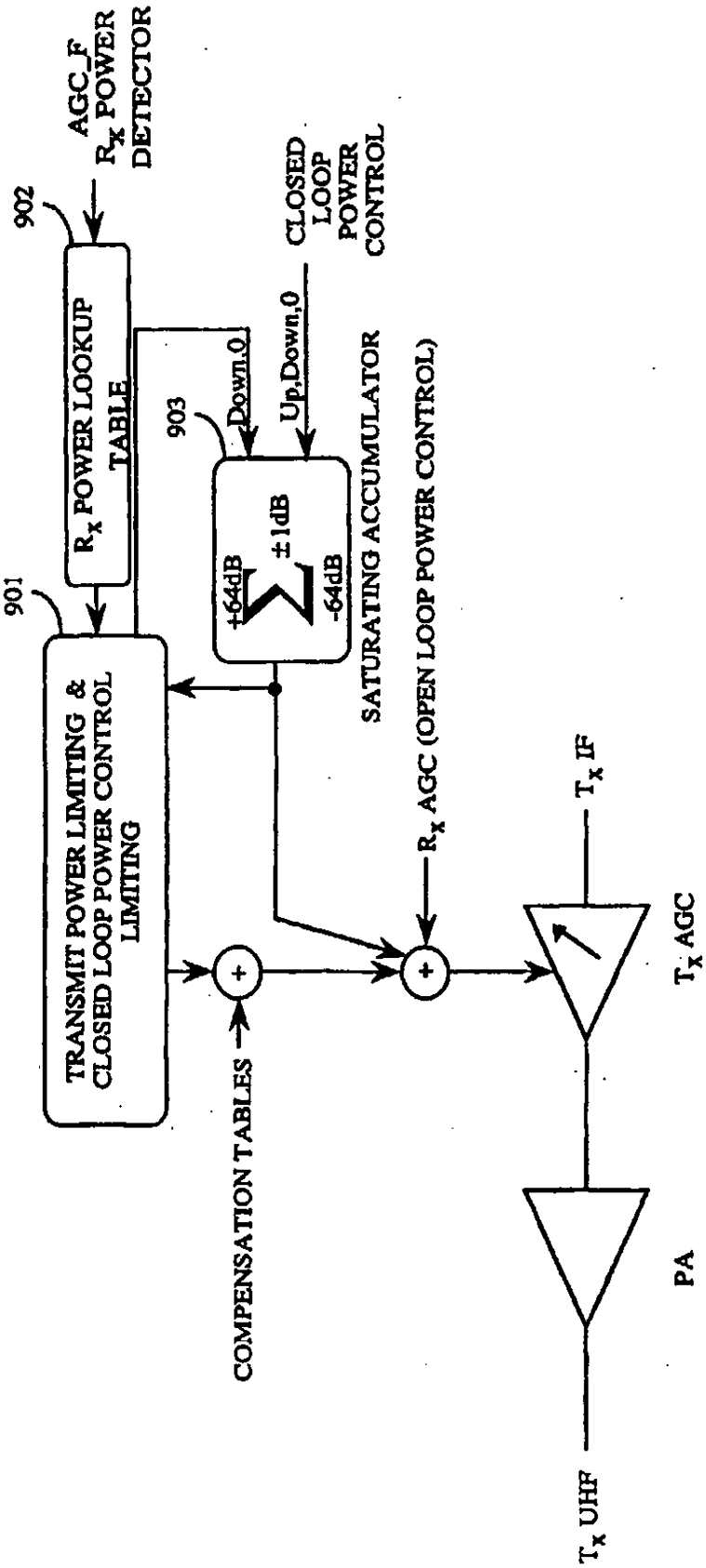
AGC_F
R_x POWER
DETECTOR
902
R_x POWER LOOKUP TABLE
CLOSED LOOP POWER CONTROL
Up,Down,0
Down,0
903
±1dB
+64dB
-64dB
SATURATING ACCUMULATOR
901
TRANSMIT POWER LIMITING & CLOSED LOOP POWER CONTROL LIMITING
R_x AGC (OPEN LOOP POWER CONTROL)
T_x IF
T_x AGC
COMPENSATION TABLES
PA
T_x UHF

FIG. 9

REVERSE LINK, TRANSMIT POWER CORRECTION AND LIMITATION IN A RADIOTELEPHONE SYSTEM

This is a continuation of application Ser. No. 08/406,432, filed Mar. 20, 1995 now abandoned, which is a Divisional of application Ser. No. 08/203,151, filed Feb. 28, 1994 now U.S. Pat. No. 5,452,473.

BACKGROUND OF THE INVENTION

I. Field of the Invention

The present invention relates to radio communications. More particularly, the present invention relates to power control in a radiotelephone system.

II. Description of the Related Art

The Federal Communications Commission (FCC) governs the use of the radio frequency (RF) spectrum. The FCC allocates certain bandwidths within the RF spectrum for specific uses. A user of an allocated bandwidth of the RF spectrum must take measures to ensure that the radiated emissions inside and outside of that bandwidth are maintained within acceptable levels to avoid interfering with other users operating in the same and or other bandwidths. These levels are governed by both the FCC and the particular user groups of said bandwidth.

The 800 MHz cellular telephone system operates its forward link, the cell to radiotelephone transmission, in the bandwidth of 869.01 MHz to 893.97 MHz and the reverse link, the radiotelephone to cell transmission, in the bandwidth of 824.01 MHz to 848.97 MHz. The forward and reverse link bandwidths are split up into channels each of which occupies a 30 kHz bandwidth. A particular user of the cellular system may operate on one or several of these channels at a time. All users of the system must ensure that they are compliant with the level of radiated emissions allowable inside and outside of the channel or channels that they have been assigned.

There are several different techniques of modulation that can be used in the cellular telephone system. Two examples of modulation techniques are frequency division multiple access (FDMA) and code division multiple access (CDMA).

The FDMA modulation technique generates signals that occupy one channel at a time while the CDMA modulation technique generates signals that occupy several channels. Both of these techniques must control their return link radiated emissions to within acceptable limits inside and outside of the assigned channel or channels. For maximum system performance, users of the CDMA technique must carefully control the level of radiated power inside the channels in which they are operating.

FIG. 1 shows a typical cellular radiotelephone. In both an FDMA and a CDMA based radiotelephone, there exists the possibility of driving the power amplifier (101) in the transmitter beyond a point where acceptable out of channel radiated emissions are maintained. This is primarily due to the increased distortion output levels of the power amplifier (101) at high output powers. Also, driving the power amplifier (101) beyond a certain point can cause interference internal to the radio. For example, PA puncturing in CDMA affects synthesizer phase noise due to large current transitions. Both of these issues cause unacceptable radio performance.

Maintaining the proper on-channel output power can be difficult due to several undesirable effects in the radiotelephone hardware. For example, the CDMA based radio must

implement a power control system that operates over a very wide dynamic range, 80 dB to 90 dB, such that the transmitted output power is linearly related to the received input power.

Closed loop and open loop power control together determine the return link transmit energy, as disclosed in U.S. Pat. No. 5,056,109 to Gilhousen et al. and assigned to Qualcomm, Incorporated. Therefore, the linear and nonlinear errors produced in both the receiver (103) and transmitter (102) RF sections can cause unacceptable power control performance. Also, both the FDMA and CDMA based radios must operate on different channels while maintaining acceptable output power levels. Variation in output power level and input power detection versus frequency can cause an unacceptable amount of error in the amount of return link transmitted energy.

These issues present significant problems to the designer of both FDMA and CDMA based radiotelephones. There is a resulting need for an effective, cost efficient means of correcting these problems.

SUMMARY OF THE INVENTION

The process of the present invention enables a radiotelephone to operate in a linear fashion over a wide dynamic range while maintaining acceptable transmit output power levels inside and outside of the return link bandwidth. The forward and return link power are measured by power detectors and input to an analog to digital converter accessible by both control hardware and/or software. The closed loop power control setting is also monitored. The radiotelephone uses the detected power levels and closed loop power control setting to index a set of correction tables that indicate the reverse link transmit power error and desired power amplifier biasing for the particular operating point. The radiotelephone also determines if the transmitter is operating above a maximum set point. The transmit gain and power amplifier biasing of the radiotelephone are adjusted to correct the undesired error and maintain the desired output power.

BRIEF DESCRIPTION OF THE DRAWINGS

FIG. 1 shows a block diagram of a typical prior art radiotelephone frequency section for use in a radiotelephone system.

FIG. 2 shows a block diagram of the preferred embodiment power control correction implementation.

FIG. 3 shows a block diagram of the power limiting control section as related to FIG.2.

FIG. 4 shows a block diagram of the closed loop power control section as related to FIG.2.

FIG. 5 shows a block diagram of the PA limit threshold control section as related to FIG.2.

FIG. 6 shows an alternate embodiment of the present invention that employs a power limiting control system based on accumulator feedback control.

FIG. 7 shows an alternate embodiment of the present invention that employs a power limiting control system based on the closed loop power control accumulator.

FIG. 8 shows an alternate embodiment of the present invention that employs a power limiting control system based on integral feedback control.

FIG. 9 shows an alternate embodiment of the present invention that employs a power limiting control system based on a measure of receive power and the closed loop power control setting to estimate output power.

DETAILED DESCRIPTION OF THE PREFERRED EMBODIMENT

The process of the present invention provides power control correction for a mobile radiotelephone as well as maintaining acceptable in and out of band maximum emission levels. This is accomplished by realtime compensation utilizing a set of correction tables that are generated during the production testing of each radiotelephone.

FIG. 2 shows a block diagram of a CDMA radiotelephone with the preferred embodiment power control correction implementation. FIGS. 3, 4, and 5 detail specific blocks of FIG. 2. The radiotelephone is comprised of a receive linearization section, transmit linearization section, power amplifier bias control section, and power limiting control section.

The receive linearization section includes an automatic gain control (AGC) section. The signal input to the AGC section is received on the forward link and amplified by a low noise amplifier (LNA) (211). The output of the LNA (211) is input to a variable gain amplifier (212). The variable gain amplifier (212) produces a signal that is converted to a digital signal using an analog to digital converter (ADC) (213).

The power of the digitized received signal is next computed by a digital power detector (214). The power detector (214) includes an integrator that integrates the detected power with respect to a reference voltage. In the preferred embodiment, this reference voltage is provided by the radio's demodulator to indicate the nominal value at which the demodulator requires the loop to lock in order to hold the power level constant. The demodulator requires this value for optimum performance since a power level too far out of the optimum range will degrade the performance of the demodulator. The power detector (214) performs the integration, thus generating an AGC setpoint. The setpoint and a receive frequency index are input to a receiver linearizing table (216).

The AGC setpoint and the frequency index are used to address the linearizer (216), thus accessing the proper calibration value. This calibration value is then output to a digital to analog converter (215) that generates the analog representation of the receive AGC setting.

The analog value adjusts the biasing of the variable gain amplifier (212). The control of the variable gain, amplifier (212) forces the receive AGC loop to dose such that the input to the receiver linearizing table (216) follows a predetermined straight line with respect to RF input power. This linearization removes the undesired linear and non-linear errors in addition to variations versus frequency that would otherwise be apparent at the input to the receiver linearizing table (216) in the receiver. These errors and variations would contribute to errors in the transmitter.

In order to reduce the error in the receive and transmit chains versus frequency, the receive and transmit linearizers utilize the frequency index that specifies the current center frequency on which the receive and transmit chains are operating. During factory calibration of the radiotelephone, the linearizers are loaded with values, in addition to the previously mentioned calibration values, that are indexed by frequency to correct the errors related to operating center frequency.

The AGC setpoint is the open loop power control signal for the radio. In the preferred embodiment, this is the power control performed by the radio by itself without control input from the cells. As the power of the signal received from the cell increases, the radio decreases its transmit power. This output power control is accomplished by the AGC setpoint that is filtered by a low pass filter (217).

The transmit section includes a digital summer (210) that combines the AGC setpoint and a closed loop power control setting (206). The output of the summer (210) is fed into a power control limiting section (205). The operation of the power control limiting section (205) and the closed loop power control section (206), illustrated in FIGS. 3 and 4 respectively, will be discussed subsequently in greater detail

The output of the power control limiting section (205), along with the transmit frequency index, are used to address values stored in a transmitter linearizing table (204). The transmitter linearizing table (204) contains values determined from production testing of the radiotelephone. The selected value is input to a digital to analog converter (203) whose output, an analog representation of the digital value input, controls a variable gain amplifier (202).

The biasing of the variable gain amplifier (202) is adjusted by the analog calibration value to a point such that the input to the transmitter linearizing table (204) follows a predetermined straight line with respect to transmitted RF output power. This linearization removes the undesired linear and non-linear errors along with variations versus frequency in the transmitter. This, combined with the previously mentioned receive linearization, greatly reduces the open and closed loop power control errors due to RF performance imperfections.

The power amplifier (PA) bias control section (218) controls the bias point of the transmit PA (201) based on the transmit gain setting such that the transmit sidebands for the given gain setting are optimized versus PA (201) current consumption. This allows a battery powered telephone to maximize talk time by reducing PA (201) current consumption at lower output powers while still maintaining acceptable sideband levels at higher output power levels.

The power control limiting section (205) is illustrated in FIG. 3. The power control limiting section (205) controls the closed loop power control and transmit gain settings when the output of the transmit gain summer (210) corresponds to a transmit output power level which is equal to or greater than the intended maximum output power. The maximum gain setting is determined by the PA limit threshold control section (209).

The threshold control section (209) determines the maximum gain setting based on a nominal value that is modified by a real-time measurement of the transmitted output power. The measurement is accomplished by an analog power detector (207) whose output transformed into a digital signal by an analog to digital converter (208). The digitized power value is then input to the threshold control section (209).

The threshold control section, detailed in FIG. 5, operates by the high power detector (HDET) linearizer (501) scaling the input digitized power value in order to match the numerology of the digital transmit gain control section. The scaled output from the linearizer (501) is subtracted (502) from the nominal maximum gain setting. This maximum gain setting can be hard coded into the radio during assembly or input during manufacturing and testing of the radio.

The difference of the maximum gain setting and the scaled output power is then added, by the adder (503), to the maximum gain setting. The sum of these signals is then used as the corrected maximum gain setting. This real-time modification of the detected power helps mitigate the errors introduced by temperature variations and aging of the transmitter PAs. In other words, if the difference between the

maximum gain setting and the real-time measured power value is 0, then no correction is necessary. If there is a difference between the two, the difference is used to correct the maximum gain setting.

Referring to FIG. 3, a digital comparator (301) detects when the output of the transmit gain summer (210) equals or exceeds the maximum gain setting. The comparator (301) controls a 2:1 multiplexer (302) that outputs the maximum allowable setting when the output of the summer (210) exceeds the maximum allowable setting. When the output of the summer (210) is less than the maximum allowable setting, the multiplexer (302) outputs the direct output of the summer (210). This prohibits the transmitter from exceeding its maximum operating point.

The closed loop power control section (206), illustrated in FIG. 4, accumulates the power control commands sent on the forward link by the controlling radiotelephone cell site and outputs a gain adjust signal. The power control commands are collected in an accumulator (401). The operation of the accumulator (401) is controlled by the power control limiting section (205) when the transmit power amplifier (201) is outputting the maximum allowable power.

When the output of the summer (210) changes from being less than to equal or greater than the maximum allowable setting, the output of the closed loop power control accumulator (401) is latched into a flip-flop (402). While the output of the summer (210) is equal to or greater than the maximum allowable setting as determined by the comparator (403) and NAND gate (404) an AND gate (405) masks off any closed loop power control up commands that would force the accumulator (401) above the flip-flop's (402) latched value. This prevents the accumulator from saturating during power limiting yet allows the closed loop power control setting to change anywhere below the latched value.

An alternate embodiment of the process of the present invention is illustrated in FIG. 6. In this embodiment, a power limiting control system is employed based on accumulator feedback control. The system operates by first measuring the output power of the power amplifier (609) using a power detector (610). The detected power is then digitized by an ADC (611) and compared to a maximum allowable setting by the comparator (601). If the output power is greater than the maximum setting, the power limiting accumulator (602) begins turning power down by reducing the gain of the variable gain amplifier (608). If the output power is less than the maximum setting the power limiting accumulator (602) returns to a 0 dB correction value.

In this embodiment, a closed loop power control limiting function (604 and 605), similar to the preferred embodiment, is employed. However, the trigger for the closed loop power control limiting function is a comparator (603) that detects when the power limiting accumulator (602) is limiting the output power by comparing the accumulator (602) output to 0 dB with the comparator (603). The linearizing compensation tables, similar to the tables in the preferred embodiment, are added into the transmit gain control using a summer (606).

In another alternate embodiment, illustrated in FIG. 7, a power limiting control system is employed that is based on the closed loop power control accumulator (702). The system operates by first measuring the output power of the power amplifier (705) using a power detector (706). The detected power is digitized (707) and compared to a maximum allowable setting by the comparator (701). If the output power is greater than the maximum setting, the closed loop power control accumulator (702) is modified to turn the amplifier (704) power down by one step each 1.25 ms until the output power is less than the maximum setting. If the output power is less than the maximum setting, the closed loop power control accumulator is not modified. The linearizing compensation tables, similar to the preferred embodiment, are added into the transmit gain control using a summer (703).

In yet another embodiment, illustrated in FIG. 8, a power limiting control system is employed that is based on integral feedback control. The system operates by first measuring the output power of the power amplifier (808) using a power detector (809). The detected power is digitized (810) and input to an integrator (801) that follows the equation:

$$1/K\int(\text{Setpoint}-\text{Detected})dt.$$

The integrator (801), generating a gain control signal, saturates at 0 dB and −63 dB of correction. The gain control signal is thus limited within a range. If the output power is greater than the setpoint, the integrator turns down the output power of the amplifier (807) at a rate based on the integration constant K until the setpoint is reached. The integrator is allowed to turn power down by as much as 63 dB. If the output power is less than the setpoint, the output of the integrator (801) will be forced to zero, thus not adjusting output power.

In this embodiment, a closed loop power control limiting function (803 and 804), similar to the preferred embodiment, is employed. The trigger for the closed loop power control limiting function, however, is a comparator (802) that detects when the power limiting integrator (801) is limiting the output power. The linearizing compensation tables, similar to the preferred embodiment, are added into the transmit gain control using a summer (805).

In still another embodiment, illustrated in FIG. 9, a power limiting control system is employed that is based only on a measure of receive power, as determined by the Rx power lookup table (902), and the closed loop power control setting as opposed to actual output power. The transmit power limiting and closed loop power control limiting function (901) can be implemented with either the preferred embodiment using the saturating accumulator (903) or one of the alternate embodiments. However, only the receive power and closed loop power control setting are used to estimate transmit output power.

In summary, the process of the present invention ensures that the transmitted sidebands and synthesizer phase noise of a radio transmitter remains within a predetermined specification by limiting the maximum output power. This power limitation is accomplished by a control loop including a calibration look-up table. Therefore, a radiotelephone using the process of the present invention would not exceed it's nominal maximum power level due to the cell issuing too many power turn-up commands. The radiotelephone limits the power output even when the cell erroneously decides the radiotelephone power should be increased.

We claim:

1. A method for limiting transmit power of a radio operating in a cellular environment, the cellular environment comprising a plurality of cells that transmit power control commands to the radio, the radio comprising a variable gain amplifier and a power limiting accumulator, the method comprising the steps of:

receiving a signal from at least one of the plurality of cells;

determining a power level of the received signal;

determining a closed loop power control value in response to the received signal;

generating a limiting gain control setting in response to the closed loop power control value and the power level, the limiting gain control setting being within a predetermined range;

combining the closed loop power control value, the power level, and the limiting gain control setting to generate a gain control signal and

adjusting the variable gain amplifier in response to the gain control signal.

2. A method for limiting transmit power of a radio operating in a radio communications system, the radio communications system comprising a plurality of base stations that transmit power control commands to the radio, the radio comprising a variable gain amplifier and a maximum gain setting, the method comprising the steps of:

receiving a signal from at least one of the plurality of base stations;

generating a received power level signal in response to the received signal;

generating a closed loop power control signal in response to the received signal;

combining the received power level signal and the closed loop power control signal to produce a summation signal;

comparing the summation signal to the maximum gain setting;

adjusting the variable gain amplifier in response to the maximum gain setting if the summation signal is greater than or equal to the maximum gain setting; and

adjusting the variable gain amplifier in response to the summation signal if the summation signal is less than the maximum gain setting.

3. The method of claim 2 further including the step of adjusting the maximum gain setting in response to a temperature of the variable gain amplifier.

4. A method for limiting transmit power of a radio operating in a cellular environment, the cellular environment comprising a plurality of cells that transmit power control commands to the radio, the radio comprising a variable gain amplifier, a maximum gain setting, and a power limiting accumulator, the method comprising the steps of:

receiving a signal from at least one of the plurality of cells;

generating a received power level signal in response to the received signal;

generating a closed loop power control signal in response to the received signal;

digitizing the received power level signal;

comparing the digitized received power level signal to the maximum gain setting;

decreasing the gain of the variable gain amplifier if the digitized received power level signal is greater than the maximum gain setting; and

prohibiting the closed loop power control signal from changing in response to the power control commands if the digitized received power level signal is greater than the maximum gain setting.

5. A method of limiting transmit power of a radio operating in a cellular environment, the cellular environment comprising a plurality of cells that transmit power control commands to the radio, the radio comprising a variable gain amplifier, a maximum gain setting, and a power control command accumulator, the method comprising the steps of:

receiving a signal from at least one of the plurality of cells;

generating a received power level signal in response to the received signal;

generating a closed loop power control signal in response to the power control commands;

digitizing the received power level signal;

comparing the digitized received power level signal to the maximum gain setting;

decreasing the closed loop power control signal by a predetermined amount for every predetermined unit of time until the closed loop power control signal is less than the maximum gain setting if the digitized received power level signal is greater than the maximum gain setting; and

varying the gain of the variable gain amplifier in response to the closed loop power control signal if the digitized received power level signal is less than or equal to the maximum gain setting.

6. A method for limiting transmit power of a radio operating in a cellular environment, the cellular environment comprising a plurality of cells that transmit power control commands to the radio, the radio comprising a variable gain amplifier, a maximum gain setting, and a power limiting accumulator, the method comprising the steps of:

receiving a signal from at least one of the plurality of cells;

generating a received power level signal in response to the received signal;

generating a closed loop power control signal in response to the power control commands;

digitizing the received power level signal;

determining a difference between the digitized received power level signal and the maximum gain setting;

integrating the difference to generate a gain control signal, the gain control signal being limited to a predetermined range;

adjusting the variable gain amplifier with the gain control signal; and

prohibiting the closed loop power control signal from changing the variable gain amplifier in response to the power control commands if the gain control signal is less than a predetermined value.

7. A radio performing transmit power calibration, operating in a cellular environment comprising a plurality of cells that transmit power control commands to the radio, the radio receiving signals through a variable gain receive amplifier the radio comprising:

a receive power detector, coupled to the receive amplifier, for generating a received power level signal;

a saturating accumulator coupled to the receive amplifier, for generating a closed loop power control signal in response to the power control commands;

a power limiting circuit, coupled to the receive power detector and the saturating accumulator, for generating a limiting gain control setting in response to the closed loop power control signal and the received power level signal, the limiting gain control setting being within a predetermined range;

a signal combiner, coupled to the receive power detector, the saturating accumulator and the power limiting circuit, for combining the received power level signal, the closed loop power control signal, and the limiting gain control setting to generate a transmit gain control signal; and

a transmit amplifier having a variable gain and a control input coupled to the signal combiner, the variable gain

adjusting in response to the transmit gain control signal.

8. The radio of claim 7 wherein the power limiting circuit further comprises:

a summer for combining the received power level signal and the closed loop power control signal to produce a summation signal; and

a comparator coupled to the summer for comparing the summation signal to a maximum gain setting to generate the limiting gain control setting.

9. The radio of claim 7 wherein the power limiting circuit further comprises:

an analog to digital converter for digitizing the received power level signal; and

an integrator, coupled to the analog to digital converter, for integrating a difference between the received power level signal and a maximum gain setting to generate the limiting gain control setting.

* * * * *

US005590408A

United States Patent [19]

Weiland et al.

[11] Patent Number: 5,590,408

[45] Date of Patent: Dec. 31, 1996

[54] **REVERSE LINK, TRANSMIT POWER CORRECTION AND LIMITATION IN A RADIOTELEPHONE SYSTEM**

[75] Inventors: **Ana L. Weiland**, Encinitas; **Richard K. Kornfeld**; **John E. Maloney**, both of San Diego, all of Calif.

[73] Assignee: **QUALCOMM Incorporated**, San Diego, Calif.

[21] Appl. No.: **407,543**

[22] Filed: **Mar. 20, 1995**

Related U.S. Application Data

[62] Division of Ser. No. 203,151, Feb. 28, 1994, Pat. No. 5,452,473.

[51] **Int. Cl.**[6] **H04B 1/04**

[52] **U.S. Cl.** **455/69**; 455/115; 455/116; 455/126

[58] **Field of Search** 455/33.1, 69, 126, 455/127, 115, 117, 116; 330/129, 132, 136; 375/200, 205, 296, 297; 370/95.3

[56] **References Cited**

U.S. PATENT DOCUMENTS

4,285,065	8/1981	Priniski	455/177.1
4,870,698	9/1989	Katsuyama et al.	455/117
4,882,767	11/1989	Machida et al.	455/117
4,939,786	7/1990	MaCallum et al.	455/117
5,056,109	10/1991	Gilhousen	455/69
5,196,808	3/1993	Pickett et al.	455/117
5,199,045	3/1993	Kato	455/88
5,267,262	11/1993	Wheatley, III	455/69
5,278,994	1/1994	Black et al.	455/126
5,297,161	3/1994	Ling	455/69
5,307,512	4/1994	Mitzlaff	455/126
5,337,006	8/1994	Miyazaki	455/126
5,381,115	1/1995	Timmons et al.	455/126
5,448,770	9/1995	Hietala et al.	455/126

OTHER PUBLICATIONS

"CDMA Network Engineering Handbook", Nov. 23, 1993, pp. 8–1 –8–8.

Primary Examiner—Andrew Faile

Attorney, Agent, or Firm—Russell B. Miller; Roger W. Martin

[57] **ABSTRACT**

The process and apparatus of the present invention limits the output power of a radiotelephone, operating in a cellular system in the preferred embodiment. This ensures the transmitted sidebands and synthesizer phase noise remains within a certain specification. This is accomplished by power detection and a correction accumulator that together generate a gain control signal by limiting the gain adjustment to a maximum value, even when the cell site communicating with the radiotelephone is sending power turn-up commands to the radiotelephone. This process includes dynamically correcting the output level of the transmitter due to gain variations in the transmitter stages or gain control elements.

7 Claims, 9 Drawing Sheets

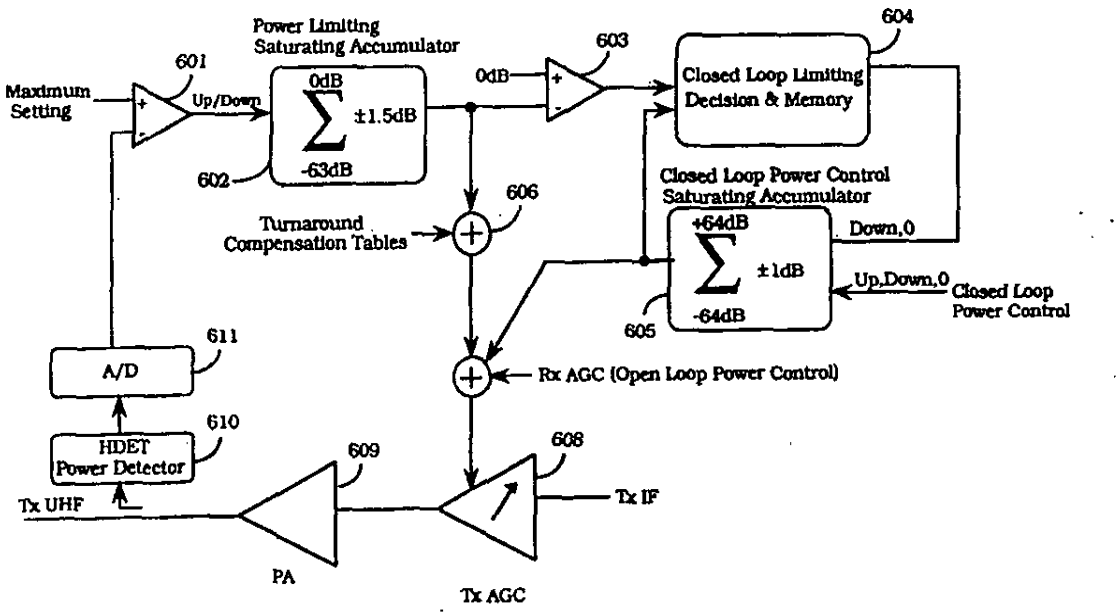

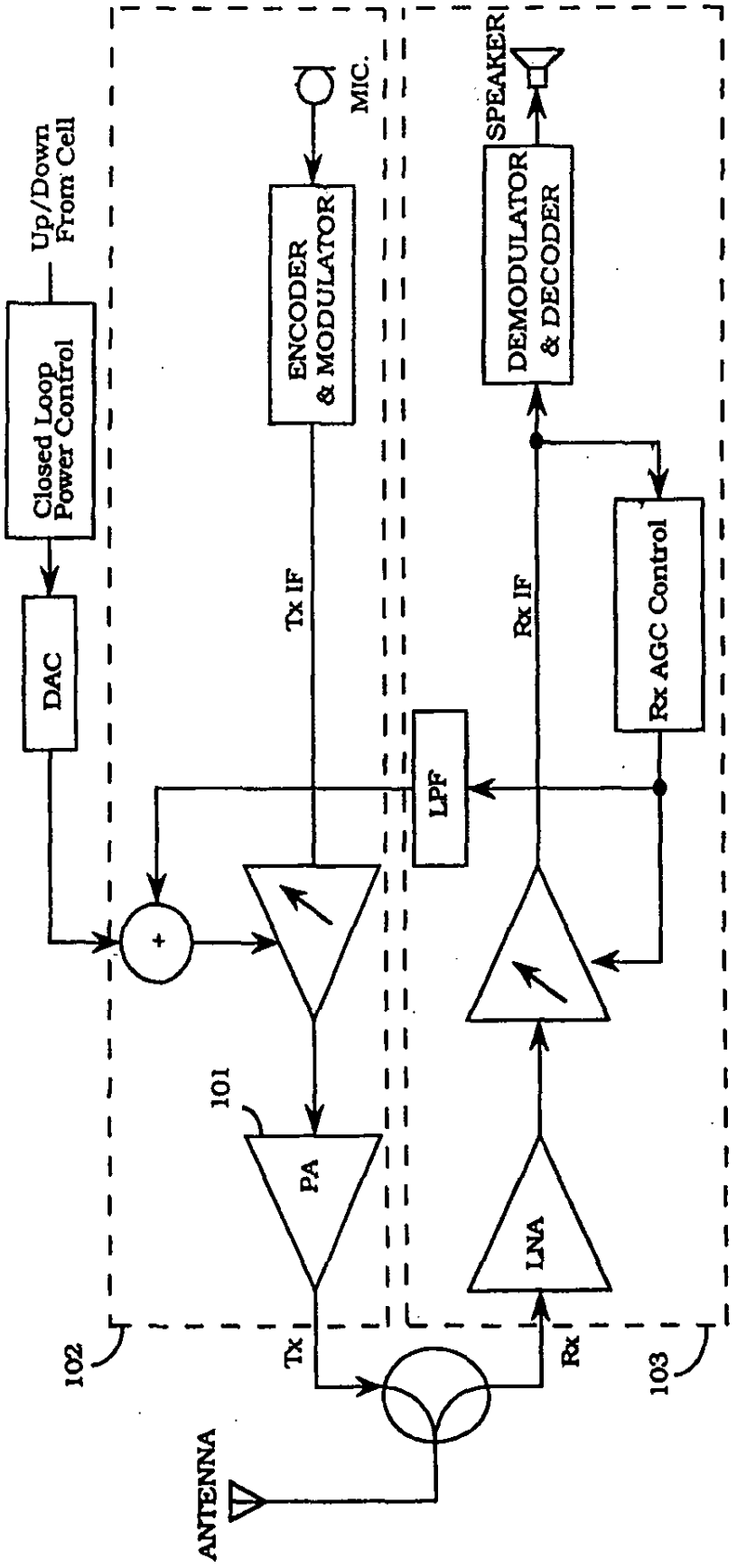

- Prior Art -

FIG. 1

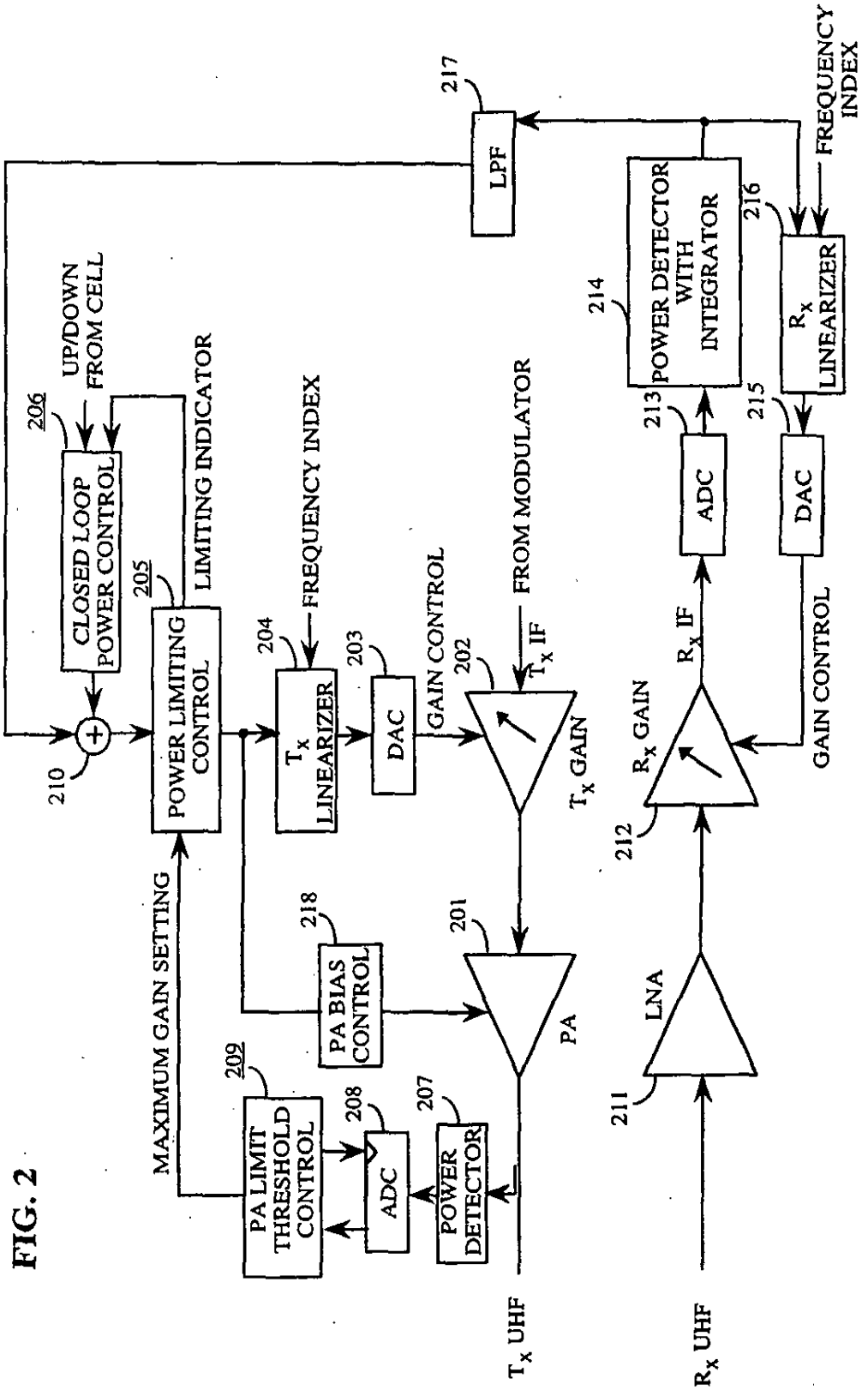
LPF
217
FREQUENCY INDEX
POWER DETECTOR WITH INTEGRATOR
214
216
R_X LINEARIZER
UP/DOWN FROM CELL
206
CLOSED LOOP POWER CONTROL
205
LIMITING INDICATOR
FREQUENCY INDEX
204
FROM MODULATOR
T_X IF
GAIN CONTROL
203
202
213
ADC
215
DAC
210
POWER LIMITING CONTROL
T_X LINEARIZER
DAC
T_X GAIN
R_X GAIN
R_X IF
GAIN CONTROL
212
MAXIMUM GAIN SETTING
218
PA BIAS CONTROL
201
PA
LNA
209
208
207
211
PA LIMIT THRESHOLD CONTROL
ADC
POWER DETECTOR
T_X UHF
R_X UHF

FIG. 2

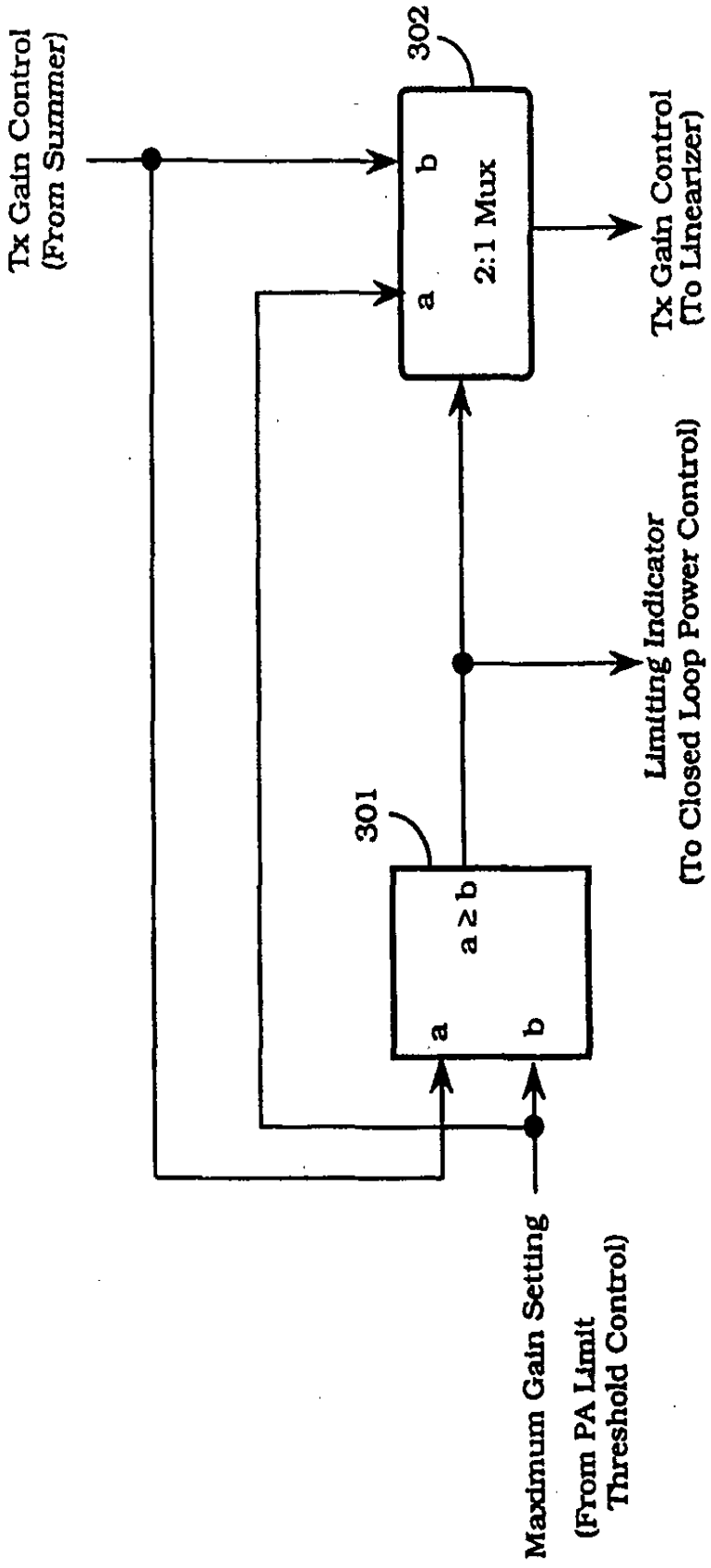
Tx Gain Control
(From Summer)
302
b
2:1 Mux
a
Tx Gain Control
(To Linearizer)
Limiting Indicator
(To Closed Loop Power Control)
301
a ≥ b
a
b
Maximum Gain Setting
(From PA Limit
Threshold Control)

205

FIG. 3

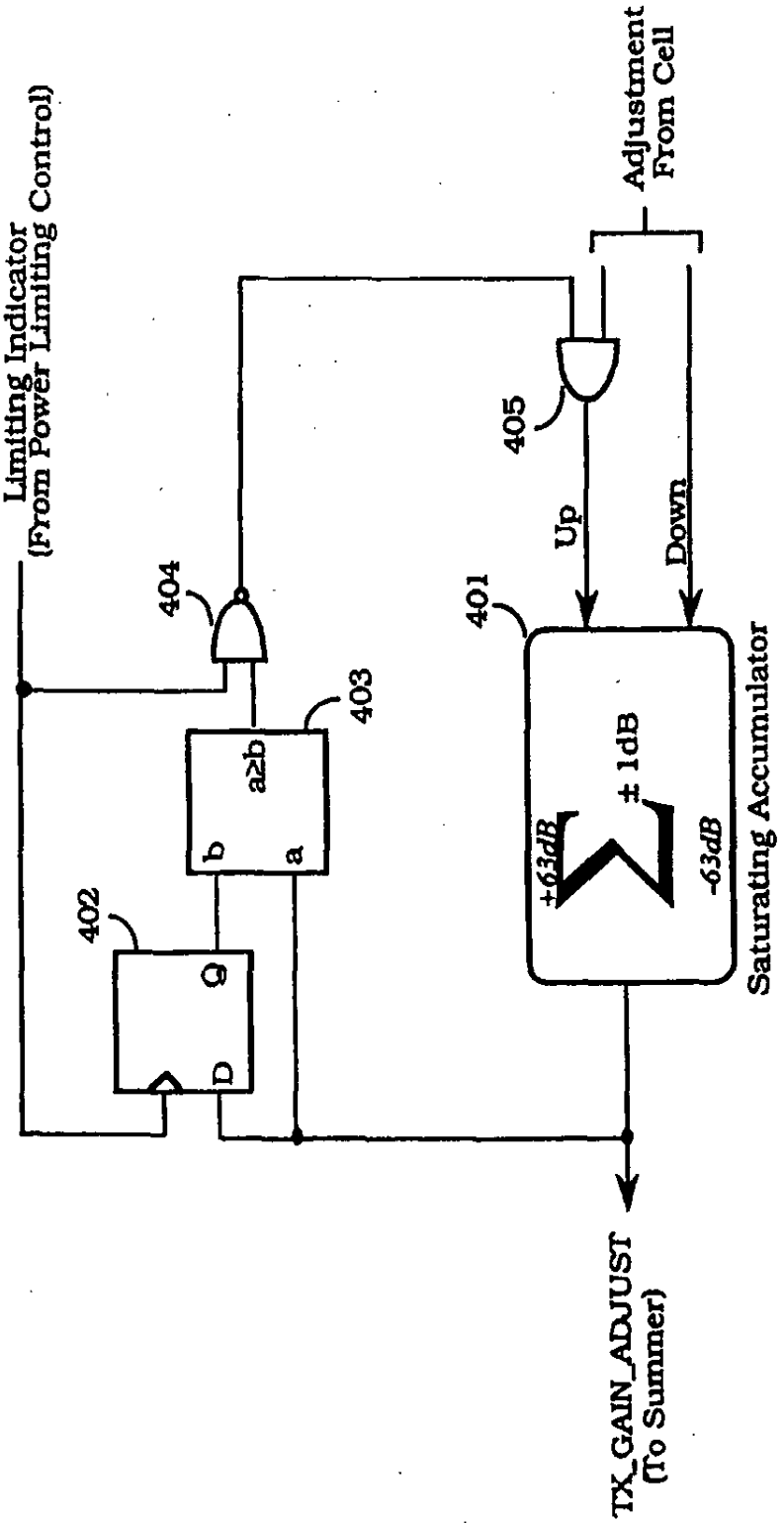
Limiting Indicator
(From Power Limiting Control)
Adjustment
From Cell
405
Up
Down
404
401
403
a≥b
b
a
± 1dB
+63dB
-63dB
Saturating Accumulator
402
Q
D
206
TX_GAIN_ADJUST
(To Summer)

FIG. 4

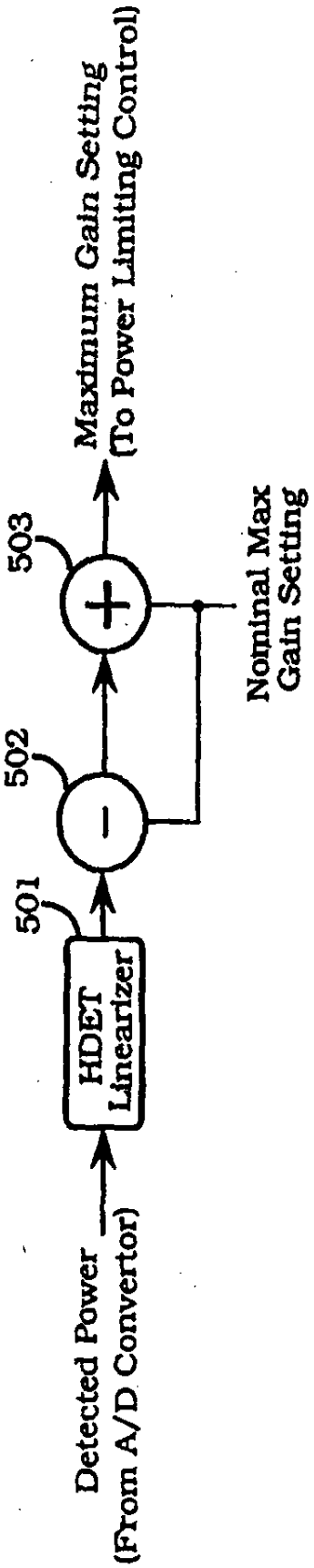
Maximum Gain Setting
(To Power Limiting Control)
503
Nominal Max
Gain Setting
502
501
HDET
Linearizer
Detected Power
(From A/D Convertor)

209

FIG. 5

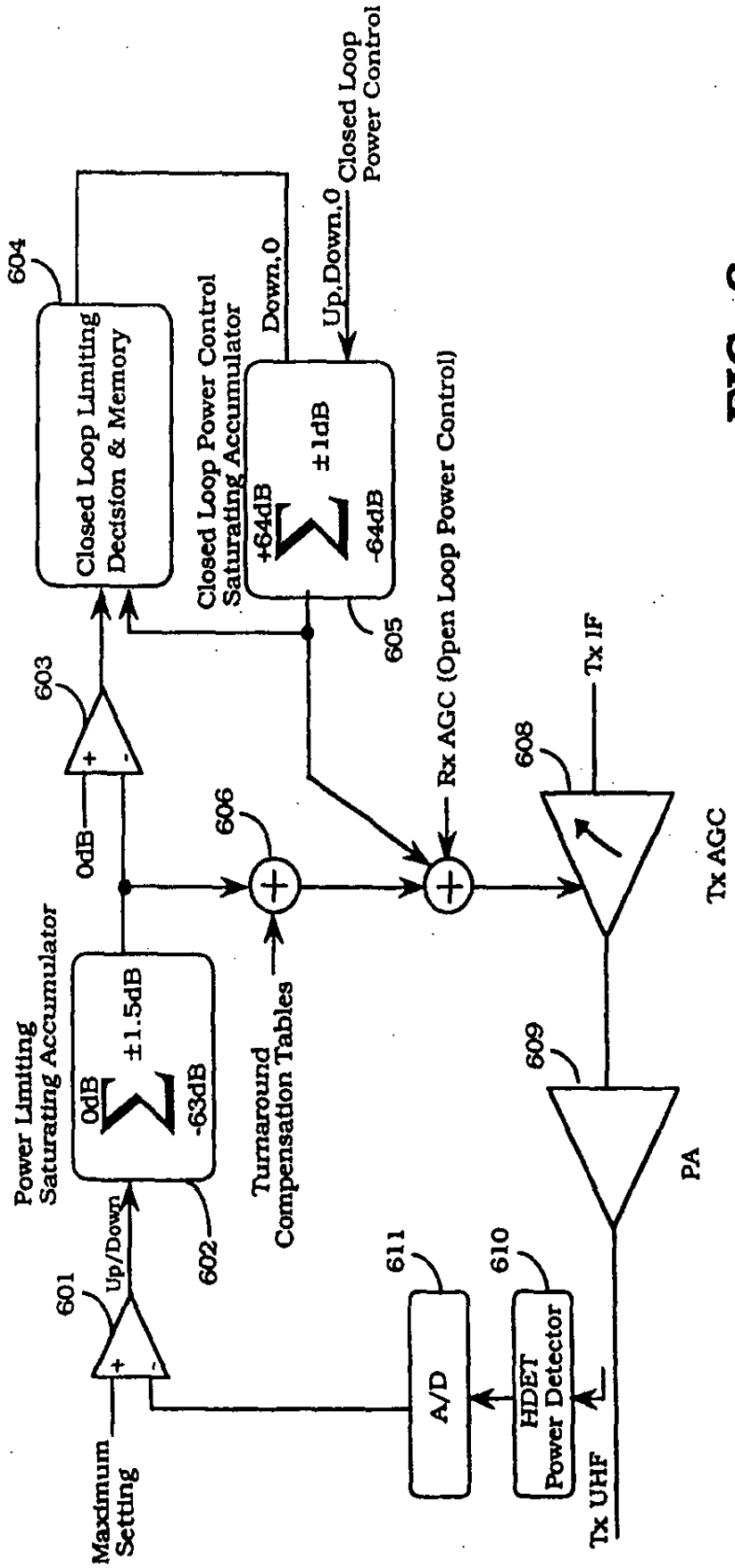
Closed Loop Power Control
Up,Down,0
Down,0
604
Closed Loop Limiting Decision & Memory
Closed Loop Power Control Saturating Accumulator
+64dB
±1dB
-64dB
605
603
0dB
606
Rx AGC (Open Loop Power Control)
608
Tx IF
Tx AGC
Power Limiting Saturating Accumulator
0dB
±1.5dB
-63dB
602
Turnaround Compensation Tables
609
PA
601
Up/Down
611
610
A/D
HDET Power Detector
Maximum Setting
Tx UHF

FIG. 6

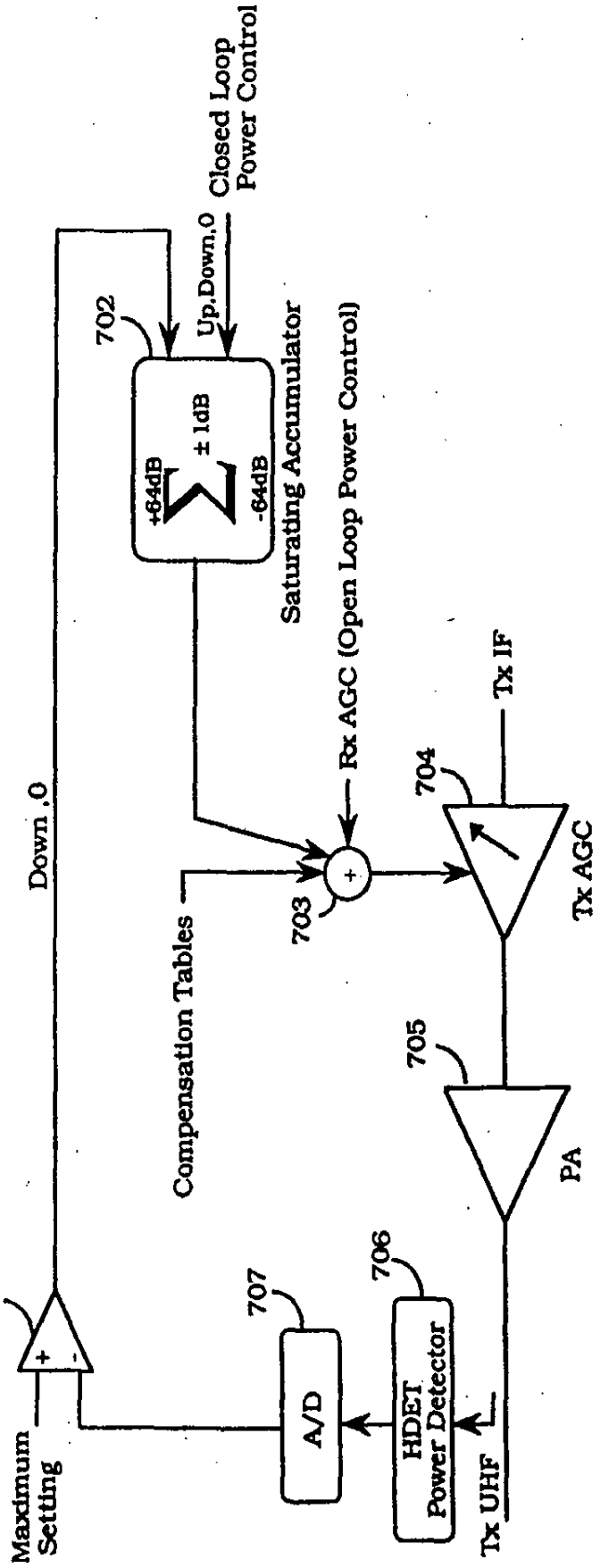
Closed Loop Power Control
Up,Down,0
702
± 1dB
+64dB
-64dB
Saturating Accumulator
Rx AGC (Open Loop Power Control)
Tx IF
704
Tx AGC
Down ,0
703
Compensation Tables
705
PA
701
707
706
A/D
HDET Power Detector
Maximum Setting
Tx UHF

FIG. 7

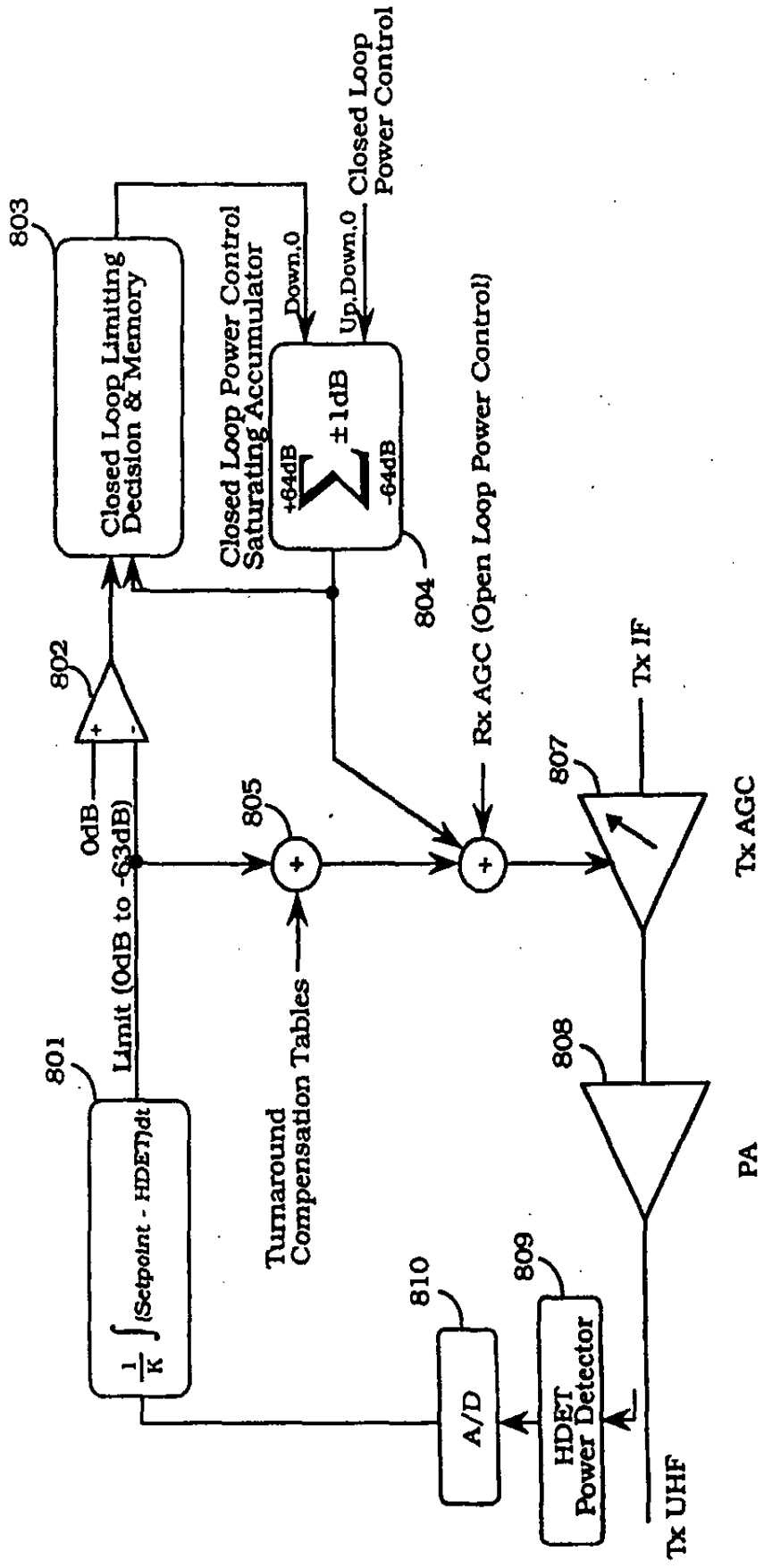
Closed Loop Power Control
Up,Down,0
Down,0
803
Closed Loop Limiting Decision & Memory
Closed Loop Power Control Saturating Accumulator
±1dB
+64dB
-64dB
804
Rx AGC (Open Loop Power Control)
802
0dB
-63dB
805
Tx IF
807
Tx AGC
Limit (0dB to -63dB)
Turnaround Compensation Tables
801
$\frac{1}{K}\int$(Setpoint - HDET)dt
808
PA
810
A/D
809
HDET Power Detector
Tx UHF

FIG. 8

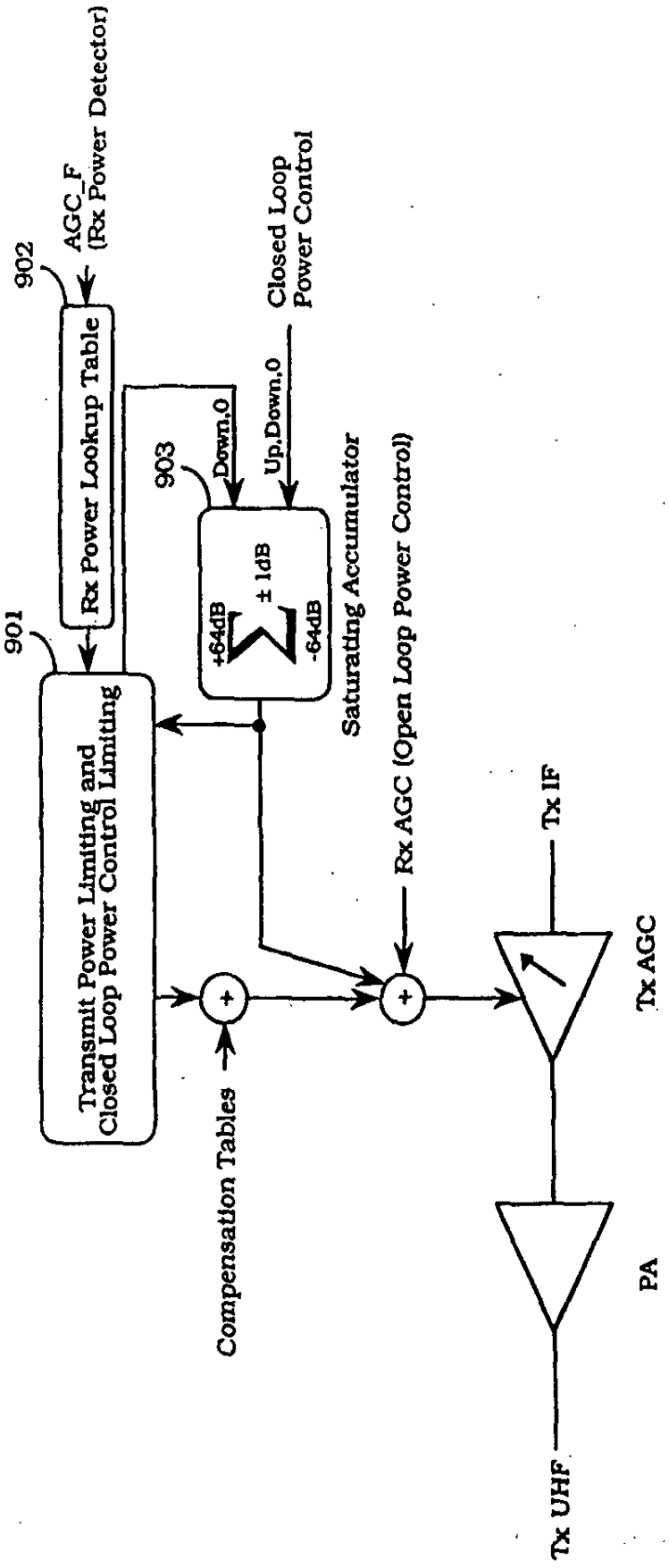
902
AGC_F
(Rx Power Detector)
Rx Power Lookup Table
Closed Loop
Power Control
903
Down.0
Up.Down.0
+64dB
± 1dB
-64dB
Saturating Accumulator
901
Transmit Power Limiting and
Closed Loop Power Control Limiting
Rx AGC (Open Loop Power Control)
Tx IF
Tx AGC
Compensation Tables
PA
Tx UHF

FIG. 9

REVERSE LINK, TRANSMIT POWER CORRECTION AND LIMITATION IN A RADIOTELEPHONE SYSTEM

This is a Divisional of application Ser. No. 08/203,151, filed Feb. 28, 1994, U.S. Pat. No. 5,452,473.

BACKGROUND OF THE INVENTION

I. Field of the Invention

The present invention relates to radio communications. More particularly, the present invention relates to power control in a radio-telephone system.

II. Description of the Related Art

The Federal Communications Commission (FCC) governs the use of the radio frequency (RF) spectrum. The FCC allocates certain band-widths within the RF spectrum for specific uses. A user of an allocated bandwidth of the RF spectrum must take measures to ensure that the radiated emissions inside and outside of that bandwidth are maintained within acceptable levels to avoid interfering with other users operating in the same and or other bandwidths. These levels are governed by both the FCC and the particular user-groups of said bandwidth.

The 800 MHz cellular telephone system operates its forward link, the cell to radiotelephone transmission, in the bandwidth of 869.01 MHz to 893.97 MHz and the reverse link, the radiotelephone to cell transmission, in the bandwidth of 824.01 MHz to 848.97 MHz. The forward and reverse link bandwidths are split up into channels each of which occupies a 30 kHz bandwidth. A particular user of the cellular system may operate on one or several of these channels at a time. All users of the system must ensure that they are compliant with the level of radiated emissions allowable inside and outside of the channel or channels that they have been assigned.

There are several different techniques of modulation that can be used in the cellular telephone system. Two examples of modulation techniques are frequency division multiple access (FDMA) and code division multiple access (CDMA).

The FDMA modulation technique generates signals that occupy one channel at a time while the CDMA modulation technique generates signals that occupy several channels. Both of these techniques must control their return link radiated emissions to within acceptable limits inside and outside of the assigned channel or channels. For maximum system performance, users of the CDMA technique must carefully control the level of radiated power inside the channels in which they are operating.

FIG. 1 shows a typical cellular radiotelephone. In both an FDMA and a CDMA based radiotelephone, there exists the possibility of driving the power amplifier (**101**) in the transmitter beyond a point where acceptable out of channel radiated emissions are maintained. This is primarily due to the increased distortion output levels of the power amplifier (**101**) at high output powers. Also, driving the power amplifier (**101**) beyond a certain point can cause interference internal to the radio. For example, PA puncturing in CDMA affects synthesizer phase noise due to large current transitions. Both of these issues cause unacceptable radio performance.

Maintaining the proper on-channel output power can be difficult due to several undesirable effects in the radiotelephone hardware. For example, the CDMA based radio must implement a power control system that operates over a very

wide dynamic range, 80dB to 90dB, such that the transmitted output power is linearly related to the received input power.

Closed loop and open loop power control together determine the return link transmit energy, as disclosed in U.S. Pat. No. 5,056,109 to Gilhousen et al. and assigned to Qualcomm, Incorporated. Therefore, the linear and nonlinear errors produced in both the receiver (**103**) and transmitter (**102**) RF sections can cause unacceptable power control performance. Also, both the FDMA and CDMA based radios must operate on different channels while maintaining acceptable output power levels. Variation in output power level and input power detection versus frequency can cause an unacceptable amount of error in the amount of return link transmitted energy.

These issues present significant problems to the designer of both FDMA and CDMA based radiotelephones. There is a resulting need for an effective, cost efficient means of correcting these problems.

SUMMARY OF THE INVENTION

The process of the present invention enables a radiotelephone to operate in a linear fashion over a wide dynamic range while maintaining acceptable transmit output power levels inside and outside of the return link bandwidth. The forward and return link power are measured by power detectors and input to an analog to digital converter accessible by both control hardware and/or software. The closed loop power control setting is also monitored. The radiotelephone uses the detected power levels and closed loop power control setting to index a set of correction tables that indicate the reverse link transmit power error and desired power amplifier biasing for the particular operating point. The radiotelephone also determines if the transmitter is operating above a maximum set point. The transmit gain and power amplifier biasing of the radiotelephone are adjusted to correct the undesired error and maintain the desired output power.

BRIEF DESCRIPTION OF THE DRAWINGS

FIG. 1 shows a block diagram of a typical prior art radiotelephone frequency section for use in a radiotelephone system.

FIG. 2 shows a block diagram of the preferred embodiment power control correction implementation.

FIG. 3 shows a block diagram of the power limiting control section as related to FIG. 2.

FIG. 4 shows a block diagram of the closed loop power control section as related to FIG. 2.

FIG. 5 shows a block diagram of the PA limit threshold control section as related to FIG. 2.

FIG. 6 shows an alternate embodiment of the present invention that employs a power limiting control system based on accumulator feedback control.

FIG. 7 shows an alternate embodiment of the present invention that employs a power limiting control system based on the closed loop power control accumulator.

FIG. 8 shows an alternate embodiment of the present invention that employs a power limiting control system based on integral feedback control.

FIG. 9 shows an alternate embodiment of the present invention that employs a power limiting control system based on a measure of receive power and the closed loop power control setting to estimate output power.

DETAILED DESCRIPTION OF THE PREFERRED EMBODIMENT

The process of the present invention provides power control correction for a mobile radiotelephone as well as maintaining acceptable in and out of band maximum emission levels. This is accomplished by real-time compensation utilizing a set of correction tables that are generated during the production testing of each radiotelephone.

FIG. 2 shows a block diagram of a CDMA radiotelephone with the preferred embodiment power control correction implementation. FIGS. 3, 4, and 5 detail specific blocks of FIG. 2. The radiotelephone is comprised of a receive linearization section, transmit linearization section, power amplifier bias control section, and power limiting control section.

The receive linearization section includes an automatic gain control (AGC) section. The signal input to the AGC section is received on the forward link and amplified by a low noise amplifier (LNA) (211). The output of the LNA (211) is input to a variable gain amplifier (212). The variable gain amplifier (212) produces a signal that is converted to a digital signal using an analog to digital converter (ADC) (213).

The power of the digitized received signal is next computed by a digital power detector (214). The power detector (214) includes an integrator that integrates the detected power with respect to a reference voltage. In the preferred embodiment, this reference voltage is provided by the radio's demodulator to indicate the nominal value at which the demodulator requires the loop to lock in order to hold the power level constant. The demodulator requires this value for optimum performance since a power level too far out of the optimum range will degrade the performance of the demodulator. The power detector (214) performs the integration, thus generating an AGC setpoint. The setpoint and a receive frequency index are input to a receiver linearizing table (216).

The AGC setpoint and the frequency index are used to address the linearizer (216), thus accessing the proper calibration value. This calibration value is then output to a digital to analog converter (215) that generates the analog representation of the receive AGC setting.

The analog value adjusts the biasing of the variable gain amplifier (212). The control of the variable gain amplifier (212) forces the receive AGC loop to close such that the input to the receiver linearizing table (216) follows a predetermined straight line with respect to RF input power. This linearization removes the undesired linear and non-linear errors in addition to variations versus frequency that would otherwise be apparent at the input to the receiver linearizing table (216) in the receiver. These errors and variations would contribute to errors in the transmitter.

In order to reduce the error in the receive and transmit chains versus frequency, the receive and transmit linearizers utilize the frequency index that specifies the current center frequency on which the receive and transmit chains are operating. During factory calibration of the radiotelephone, the linearizers are loaded with values, in addition to the previously mentioned calibration values, that are indexed by frequency to correct the errors related to operating center frequency.

The AGC setpoint is the open loop power control signal for the radio. In the preferred embodiment, this is the power control performed by the radio by itself without control input from the cells. As the power of the signal received from the cell increases, the radio decreases its transmit power. This output power control is accomplished by the AGC setpoint that is filtered by a low pass filter (217).

The transmit section includes a digital summer (210) that combines the AGC setpoint and a closed loop power control setting (206). The output of the summer (210) is fed into a power control limiting section (205). The operation of the power control limiting section (205) and the closed loop power control section (206), illustrated in FIGS. 3 and 4 respectively, will be discussed subsequently in greater detail.

The output of the power control limiting section (205), along with the transmit frequency index, are used to address values stored in a transmitter linearizing table (204). The transmitter linearizing table (204) contains values determined from production testing of the radiotelephone. The selected value is input to a digital to analog converter (203) whose output, an analog representation of the digital value input, controls a variable gain amplifier (202).

The biasing of the variable gain amplifier (202) is adjusted by the analog calibration value to a point such that the input to the transmitter linearizing table (204) follows a predetermined straight line with respect to transmitted RF output power. This linearization removes the undesired linear and non-linear errors along with variations versus frequency in the transmitter. This, combined with the previously mentioned receive linearization, greatly reduces the open and closed loop power control errors due to RF performance imperfections.

The power amplifier (PA) bias control section (218) controls the bias point of the transmit PA (201) based on the transmit gain setting such that the transmit sidebands for the given gain setting are optimized versus PA (201) current consumption. This allows a battery powered telephone to maximize talk time by reducing PA (201) current consumption at lower output powers while still maintaining acceptable sideband levels at higher output power levels.

The power control limiting section (205) is illustrated in FIG. 3. The power control limiting section (205) controls the closed loop power control and transmit gain settings when the output of the transmit gain summer (210) corresponds to a transmit output power level which is equal to or greater than the intended maximum output power. The maximum gain setting is determined by the PA limit threshold control section (209).

The threshold control section (209) determines the maximum gain setting based on a nominal value that is modified by a real-time measurement of the transmitted output power. The measurement is accomplished by an analog power detector (207) whose output transformed into a digital signal by an analog to digital converter (208). The digitized power value is then input to the threshold control section (209).

The threshold control section, detailed in FIG. 5, operates by the high power detector (HDET) linearizer (501) scaling the input digitized power value in order to match the numerology of the digital transmit gain control section. The scaled output from the linearizer (501) is subtracted (502) from the nominal maximum gain setting. This maximum gain setting can be hard coded into the radio during assembly or input during manufacturing and testing of the radio.

The difference of the maximum gain setting and the scaled output power is then added, by the adder (503) to the maximum gain setting. The sum of these signals is then used as the corrected maximum gain setting. This real-time modification of the detected power helps mitigate the errors introduced by temperature variations and aging of the transmitter PAs. In other words, if the difference between the

maximum gain setting and the real-time measured power value is 0, then no correction is necessary. If there is a difference between the two, the difference is used to correct the maximum gain setting.

Referring to FIG. 3, a digital comparator (301) detects when the output of the transmit gain summer (210) equals or exceeds the maximum gain setting. The comparator (301) controls a 2:1 multiplexer (302) that outputs the maximum allowable setting when the output of the summer (210) exceeds the ms,mum allowable setting. When the output of the summer (210) is less than the maximum allowable setting, the multiplexer (302) outputs the direct output of the summer (210). This prohibits the transmitter from exceeding its maximum operating point.

The closed loop power control section (206), illustrated in FIG. 4, accumulates the power control commands sent on the forward link by the controlling radiotelephone cell site and outputs a gain adjust signal. The power control commands are collected in an accumulator (401). The operation of the accumulator (401) is controlled by the power control limiting section (205) when the transmit power amplifier (201) is outputting the maximum allowable power.

When the output of the summer (210) changes from being less than to equal or greater than the maximum allowable setting, the output of the closed loop power control accumulator (401) is latched into a flip-flop (402). While the output of the summer (210) is equal to or greater than the maximum allowable setting, as determined by the comparator (403) and NAND gate (404), an AND gate (405) masks off any closed loop power control up commands that would force the accumulator (401) above the flip-flop's (402) latched value. This prevents the accumulator from saturating during power limiting yet allows the closed loop power control setting to change anywhere below the latched value.

An alternate embodiment of the process of the present invention is illustrated in FIG. 6. In this embodiment, a power limiting control system is employed based on accumulator feedback control. The system operates by first measuring the output power of the power amplifier (609) using a power detector (610). The detected power is then digitized by an ADC (611) and compared to a maximum allowable setting by the comparator (601). If the output power is greater than the maximum setting, the power limiting accumulator (602) begins turning power down by reducing the gain of the variable gain amplifier (608). If the output power is less than the maximum setting the power limiting accumulator (602) returns to a 0dB correction value.

In this embodiment, a dosed loop power control limiting function(604 and 60), similar to the preferred embodiment, is employed. However, the trigger for the closed loop power control limiting function is a comparator (603) that detects when the power limiting accumulator (602) is limiting the output power by comparing the accumulator (602) output to 0dB with the comparator (603). The linearizing compensation tables, similar to the tables in the preferred embodiment, are added into the transmit gain control using a summer (606).

In another alternate embodiment, illustrated in FIG. 7, a power limiting control system is employed that is based on the closed loop power control accumulator (702). The system operates by first measuring the output power of the power amplifier (705) using a power detector (706). The detected power is digitized (707) and compared to a maximum allowable setting by the comparator (701). If the output power is greater than the maximum setting, the closed loop power control accumulator (702) is modified to turn the amplifier (704) power down by one step each 1.25 ms until the output power is less than the maximum setting. If the output power is less than the maximum setting, the closed loop power control accumulator is not modified. The linearizing compensation tables, similar to the preferred embodiment, are added into the transmit gain control using a summer (703).

In yet another embodiment, illustrated in FIG. 8, a power limiting control system is employed that is based on integral feedback control. The system operates by first measuring the output power of the power amplifier (808) using a power detector (809). The detected power is digitized (810) and input to an integrator (801) that follows the equation:

$$\frac{1}{K} \cdot \int(\text{Setpoint} - \text{Detected})dt.$$

The integrator (801), generating a gain control signal, saturates at 0 dB and −63 dB of correction. The gain control signal is thus limited within a range. If the output power is greater than the setpoint, the integrator turns down the output power of the amplifier (807) at a rate based on the integration constant K until the setpoint is reached. The integrator is allowed to turn power down by as much as 63 dB. If the output power is less than the setpoint, the output of the integrator (801) will be forced to zero, thus not adjusting output power.

In this embodiment, a closed loop power control limiting function (803 and 804), similar to the preferred embodiment, is employed. The trigger for the closed loop power control limiting function, however, is a comparator (802) that detects when the power limiting integrator (801) is limiting the output power. The linearizing compensation tables, similar to the preferred embodiment, are added into the transmit gain control using a summer (805).

In still another embodiment, illustrated in FIG. 9, a power limiting control system is employed that is based only on a measure of receive power as determined by the Rx power lookup table (902), and the closed loop power control setting as opposed to actual output power. The transmit power limiting and closed loop power control limiting function (901) can be implemented with either the preferred embodiment using the saturating accumulator (903), or one of the alternate embodiments. However, only the receive power and closed loop power control setting are used to estimate transmit output power.

In summary, the process of the present invention ensures that the transmitted sidebands and synthesizer phase noise of a radio transmitter remains within a predetermined specification by limiting the maximum output power. This power limitation is accomplished by a control loop including a calibration look-up table. Therefore, a radiotelephone using the process of the present invention would not exceed it's nominal maximum power level due to the cell issuing too many power turn-up commands. The radiotelephone limits the power output even when the cell erroneously decides the radiotelephone power should be increased.

We claim:

1. A method for limiting transmit power of a radio operating in a radio communications system, the radio communications system comprising at least one base station that transmits signals including power control commands to the radio, the radio comprising a variable gain amplifier and a maximum gain setting, the method comprising the steps of:

determining an open loop power control value in response to a signal received from the at least one base station;

determining a gain adjust signal in response to the transmitted power control commands;

combining the open loop power control value and the gain adjust signal to produce a summation signal;

comparing the summation signal to the maximum gain setting;

if the summation signal is greater than or equal to the maximum gain setting, adjusting the variable gain amplifier in response to the maximum gain setting; and

if the summation signal is less than the maximum gain setting, adjusting the variable gain amplifier in response to the summation signal.

2. The method of claim 1 and further including the step of adjusting the maximum gain setting in response to a temperature of the variable gain amplifier.

3. The method of claim 2 wherein the step of adjusting the maximum gain setting further includes the steps of:

the variable gain amplifier transmitting a signal;

detecting a power value of the transmitted signal;

scaling the power value to produce a scaled power signal;

subtracting the maximum gain setting from the scaled power signal to produce a difference signal; and

adding the difference signal to the maximum gain setting.

4. A method for limiting transmit power of a radio operating in a cellular environment, the cellular environment comprising a plurality of cells that transmit power control commands to the radio, the radio comprising a variable gain amplifier and a maximum gain setting, the method comprising the steps of:

determining an open loop power control value in response to a signal received from at least one cell of the plurality of cells;

determining a gain adjust signal in response to the transmitted power control commands;

combining the open loop power control value and the gain adjust signal to produce a summation signal;

adjusting the maximum gain setting in response to a temperature of the variable gain amplifier;

comparing the adjusted maximum gain setting to the summation signal;

if the summation signal is greater than or equal to the adjusted maximum gain setting, prohibiting the gain adjust signal from increasing in response to the transmitted power control commands;

if the summation signal is greater than or equal to the adjusted maximum gain setting, adjusting the variable gain amplifier in response to the adjusted maximum gain setting; and

if the summation signal is less than the adjusted maximum gain setting, adjusting the variable gain amplifier in response to the summation signal.

5. A method for limiting transmit power of a radio operating in a cellular environment, the cellular environment comprising a plurality of cells that transmit power control commands to the radio, the radio comprising a variable gain amplifier, a maximum gain setting, and a power limiting accumulator, the method comprising the steps of:

the variable gain amplifier transmitting a signal;

determining a gain adjust signal in response to the transmitted power control commands;

detecting a power value of the transmitted signal;

digitizing the power value;

comparing the digitized power value to the maximum gain setting;

if the digitized power value is greater than the maximum gain setting, decreasing the gain of the variable gain amplifier; and

if the digitized power value is greater than the maximum gain setting, prohibiting the gain adjust signal from increasing in response to the transmitted power control commands.

6. A method for limiting transmit power of a radio operating in a cellular environment, the cellular environment comprising a plurality of cells that transmit power control commands to the radio, the radio comprising a variable gain amplifier, a maximum gain setting, and a power control command accumulator that generates a gain adjust signal, the method comprising the steps of:

the variable gain amplifier transmitting a signal;

determining the gain adjust signal in response to the transmitted power control commands;

detecting a power value of the transmitted signal;

digitizing the power value;

comparing the digitized power value to the maximum gain setting;

if the digitized power value is greater than the maximum gain setting, decreasing the gain adjust signal by a predetermined amount for every predetermined unit of time until the gain adjust signal is less than the maximum gain setting; and

if the digitized power value is less than or equal to the maximum gain setting, varying the gain of the variable gain amplifier in response to the gain adjust signal.

7. A method for limiting transmit power of a radio operating in a cellular environment, the cellular environment comprising a plurality of cells that transmit power control commands to the radio, the radio comprising a variable gain amplifier, a maximum gain setting, and a power limiting accumulator, the method comprising the steps of:

the variable gain amplifier transmitting a signal;

determining a gain adjust signal in response to the transmitted power control commands;

detecting a power value of the transmitted signal;

digitizing the power value;

determining a difference between the digitized power value and the maximum gain setting;

integrating the difference to generate a gain control signal, the gain control signal being limited to a predetermined range;

adjusting the variable gain amplifier with the gain control signal; and

if the gain control signal is less than a predetermined value, prohibiting the gain adjust signal from increasing the variable gain amplifier in response to the transmitted power control commands.

* * * * *

US005638412A

United States Patent [19]

Blakeney, II et al.

[11] Patent Number: 5,638,412

[45] Date of Patent: Jun. 10, 1997

[54] METHOD FOR PROVIDING SERVICE AND RATE NEGOTIATION IN A MOBILE COMMUNICATION SYSTEM

[75] Inventors: Robert D. Blakeney, II, Steamboat Springs, Colo.; Edward G. Tiedemann, Jr., San Diego, Calif.

[73] Assignee: Qualcomm Incorporated, San Diego, Calif.

[21] Appl. No.: 260,192

[22] Filed: Jun. 15, 1994

[51] Int. Cl.[6] H04L 23/00

[52] U.S. Cl. 375/377; 375/358; 455/69; 370/341

[58] Field of Search 375/222, 377, 375/358; 371/32; 370/84, 95.1, 95.3, 110.1; 379/59, 60; 455/33.1, 33.2, 69

[56] References Cited

U.S. PATENT DOCUMENTS

4,756,009	7/1988	Qureshi et al.	375/222
4,763,322	8/1988	Eizenhofer	370/95
4,953,210	8/1990	McGlynn et al.	375/222
5,267,244	11/1993	Messerschmitt et al.	375/363

FOREIGN PATENT DOCUMENTS

0210698	2/1987	European Pat. Off.	H04Q 7/04

Primary Examiner—Tesfaldet Bocure
Assistant Examiner—Kevin Kim
Attorney, Agent, or Firm—Russell B. Miller; Roger W. Martin; Sean English

[57] ABSTRACT

A method and apparatus for negotiating service configuration in a digital communication system is disclosed. In an exemplary embodiment the service negotiation system is implemented in a wireless spread spectrum communication system. The service configuration comprises data rates, frame formats and types of services. Types of service may include speech encoding, facsimile or digital data services. Further described herein is a digital transmitter and receiver using the service negotiation system to provide service configuration mutually acceptable at both ends of a communication link.

29 Claims, 5 Drawing Sheets

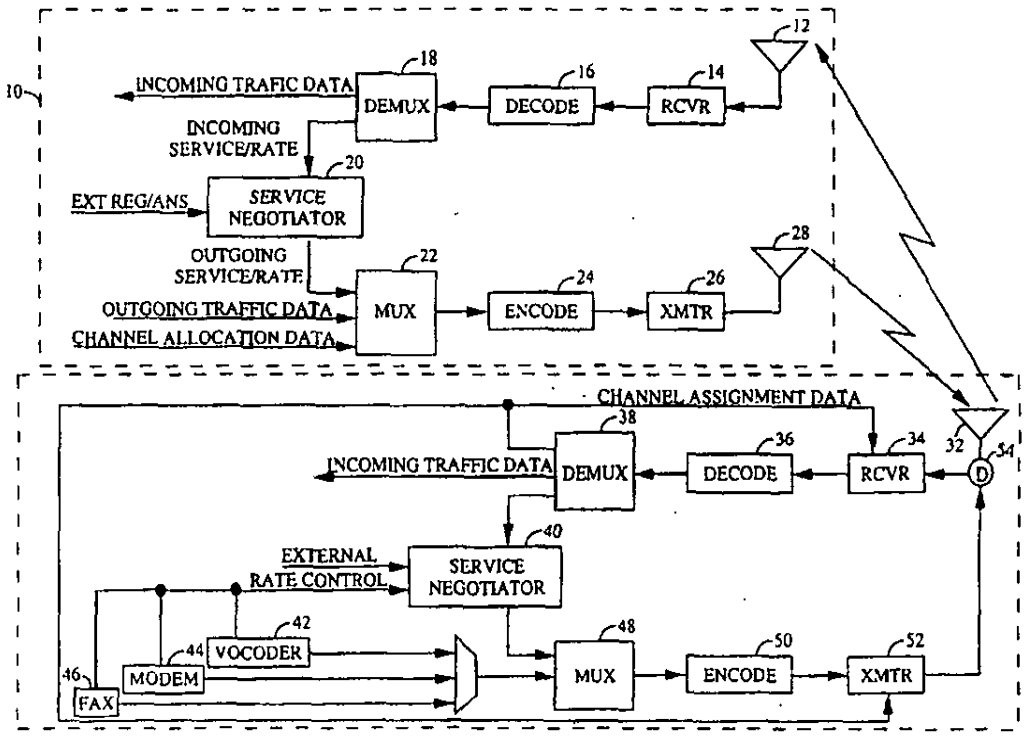

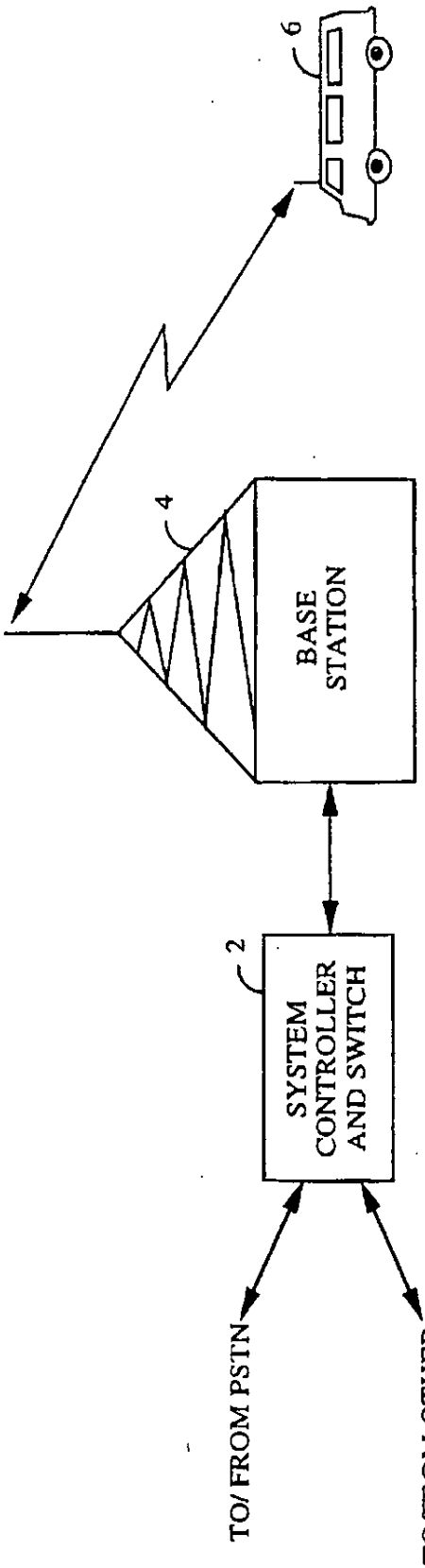
6
4
BASE STATION
2
SYSTEM CONTROLLER AND SWITCH
TO/ FROM PSTN
TO/FROM OTHER CELL-SITES

FIG. 1

FIG. 2

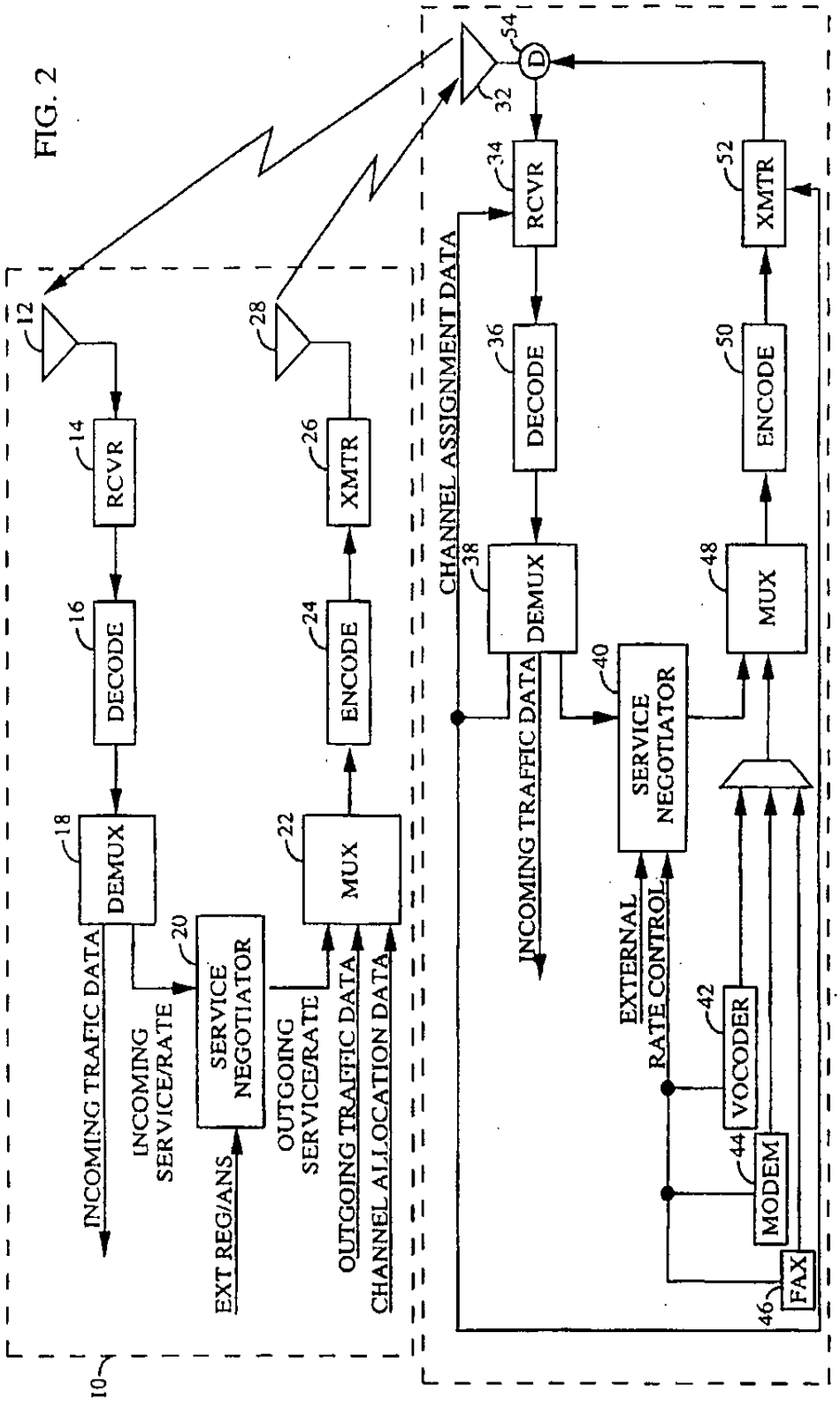
10
12
14
RCVR
16
DECODE
18
DEMUX
20
SERVICE NEGOTIATOR
22
MUX
24
ENCODE
26
XMTR
28
32
54
D
34
RCVR
36
DECODE
38
DEMUX
40
SERVICE NEGOTIATOR
42
VOCODER
44
MODEM
46
FAX
48
MUX
50
ENCODE
52
XMTR
INCOMING TRAFFIC DATA
INCOMING SERVICE/RATE
EXT REQ/ANS
OUTGOING SERVICE/RATE
OUTGOING TRAFFIC DATA
CHANNEL ALLOCATION DATA
CHANNEL ASSIGNMENT DATA
INCOMING TRAFFIC DATA
EXTERNAL RATE CONTROL

FIG. 3a
GENERAL FRAME STRUCTURE



FIG. 3b
PRIMARY TRAFFIC ONLY



FIG. 3c
PRIMARY & SIGNALLING TRAFFIC



FIG. 3d
PRIMARY & SECONDARY



FIG. 3e
SIGNALLING ONLY



FIG. 3f
SECONDARY ONLY



FIG. 3g
PRIMARY SIGNALLING & SECONDARY



FIG. 4

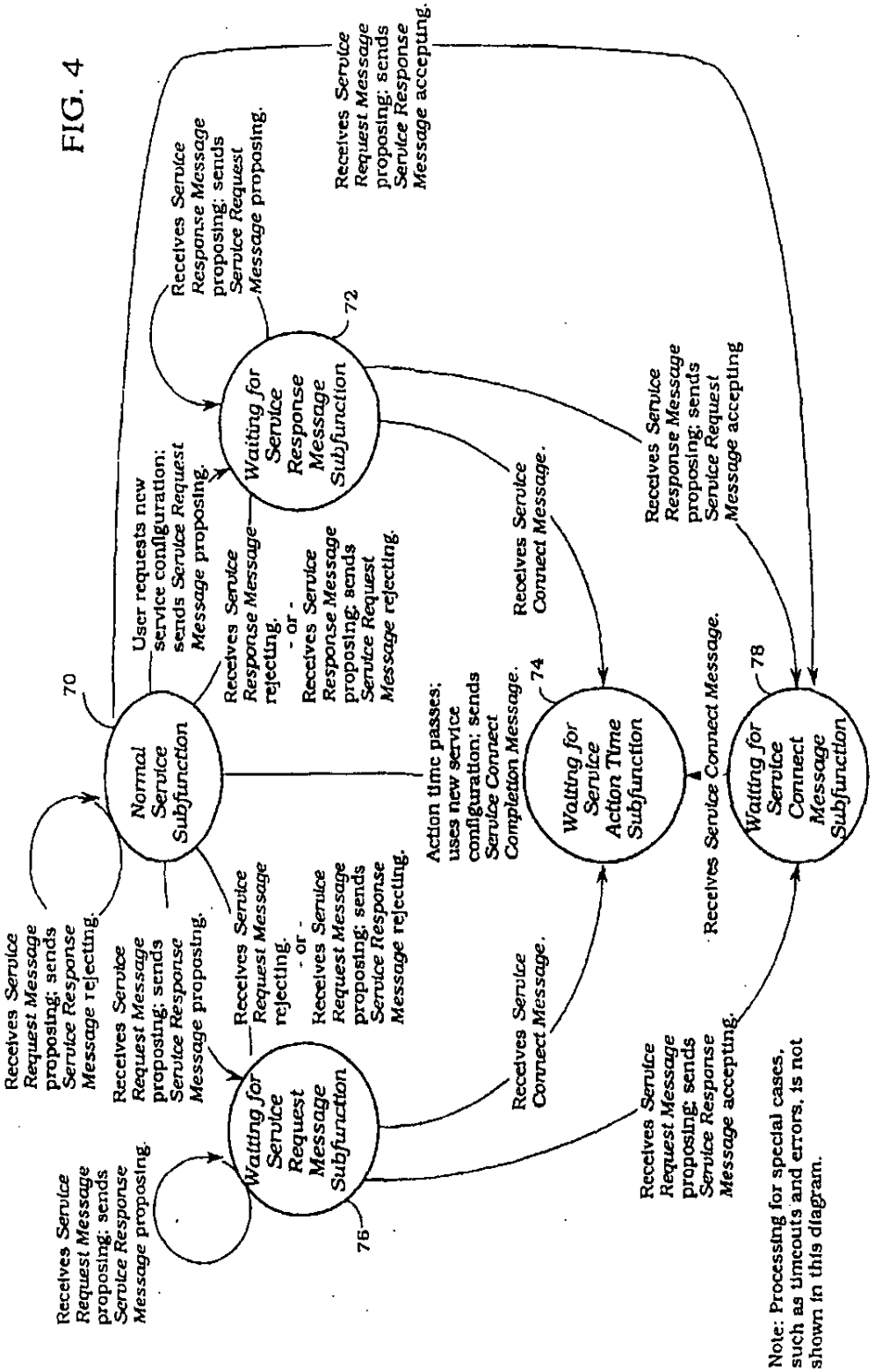
Normal Service Subfunction
70
Waiting for Service Response Message Subfunction
72
Waiting for Service Action Time Subfunction
74
Waiting for Service Request Message Subfunction
76
Waiting for Service Connect Message Subfunction
78
User requests new service configuration; sends Service Request Message proposing.
Receives Service Response Message proposing; sends Service Request Message proposing.
Receives Service Request Message proposing; sends Service Response Message proposing.
Receives Service Response Message proposing; sends Service Request Message rejecting.
Receives Service Request Message proposing; sends Service Response Message rejecting.
Receives Service Request Message proposing; sends Service Response Message rejecting.
Receives Service Request Message proposing; sends Service Response Message proposing.
Receives Service Request Message proposing; sends Service Response Message accepting.
Receives Service Response Message proposing; sends Service Request Message accepting
Receives Service Request Message proposing; sends Service Response Message proposing.
Receives Service Request Message proposing; sends Service Response Message accepting.
Receives Service Connect Message.
Receives Service Connect Message.
Receives Service Connect Message.
Action time passes; uses new service configuration; sends Service Connect Completion Message.
Note: Processing for special cases, such as timeouts and errors, is not shown in this diagram.

FIG. 5

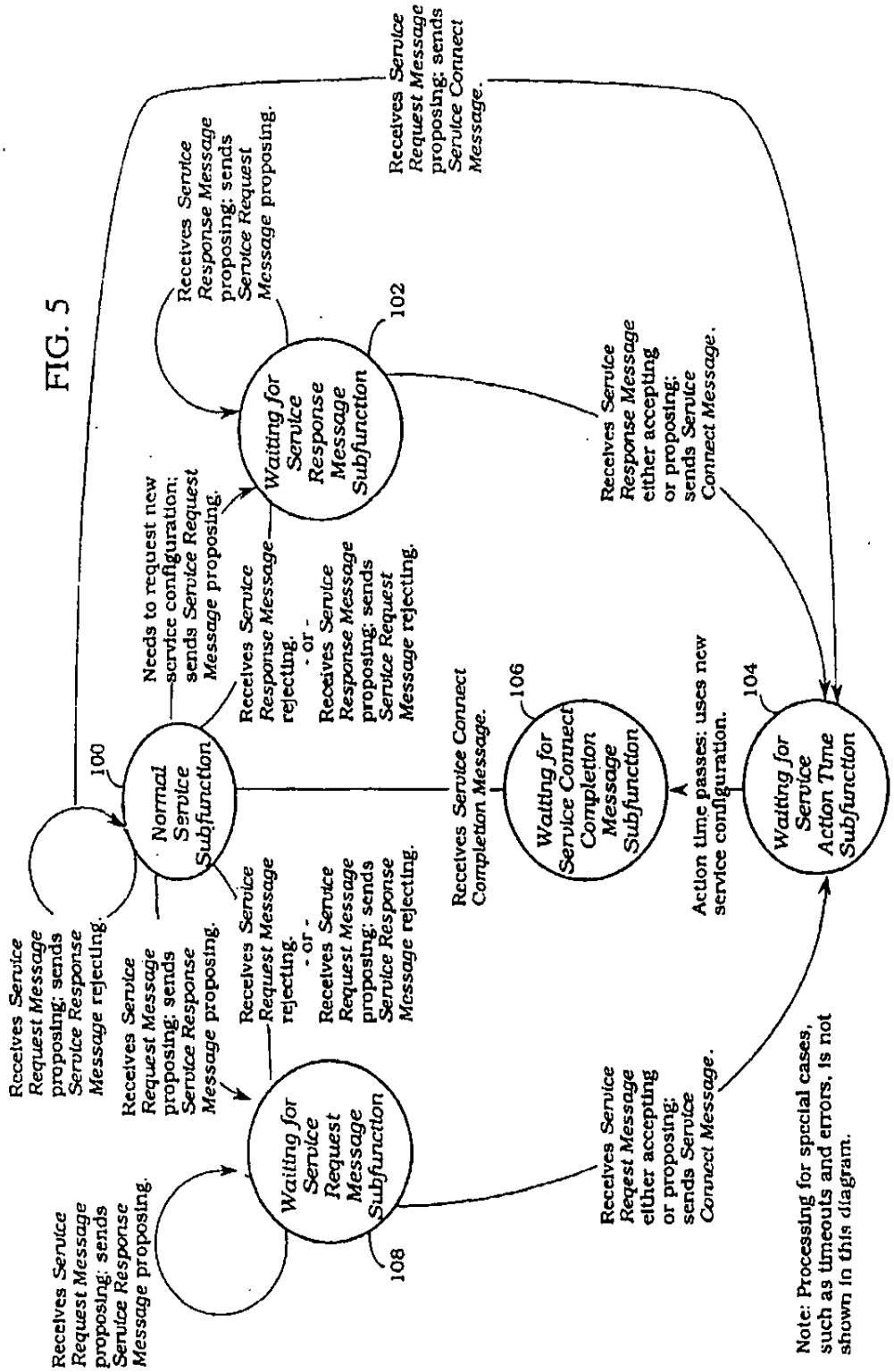
Normal Service Subfunction
100
Waiting for Service Response Message Subfunction
102
Waiting for Service Request Message Subfunction
108
Waiting for Service Connect Completion Message Subfunction
106
Waiting for Service Action Time Subfunction
104
Receives Service Request Message proposing; sends Service Response Message rejecting.
Receives Service Request Message proposing; sends Service Response Message proposing.
Receives Service Request Message rejecting. - or - Receives Service Request Message proposing; sends Service Response Message rejecting.
Needs to request new service configuration; sends Service Request Message proposing.
Receives Service Response Message rejecting. - or - Receives Service Response Message proposing; sends Service Request Message rejecting.
Receives Service Response Message proposing; sends Service Request Message proposing.
Receives Service Request Message proposing; sends Service Connect Message.
Receives Service Connect Completion Message.
Receives Service Response Message either accepting or proposing; sends Service Connect Message.
Action time passes; uses new service configuration.
Receives Service Regest Message either accepting or proposing; sends Service Connect Message.
Receives Service Request Message proposing; sends Service Response Message proposing.
Note: Processing for special cases, such as timeouts and errors, is not shown in this diagram.

METHOD FOR PROVIDING SERVICE AND RATE NEGOTIATION IN A MOBILE COMMUNICATION SYSTEM

BACKGROUND OF THE INVENTION

1. Field of the Invention

The present invention relates to communication systems. More particularly, the present invention relates to a novel and improved method for providing rate and service negotiation in a wireless communication system.

2. Description of the Related Art

The use of code division multiple access (CDMA) modulation techniques is one of several techniques for facilitating communications in which a large number of system users are present. Other multiple access communication system techniques, such as time division multiple access (TDMA), frequency division multiple access (FDMA) and AM modulation schemes such as amplitude companded single sideband (ACSSB) are known in the art. However the spread spectrum modulation technique of CDMA has significant advantages over these modulation techniques for multiple access communication systems. The use of CDMA techniques in a multiple access communication system is disclosed in U.S. Pat. No. 4,901,307, issued Feb. 13, 1990, entitled "SPREAD SPECTRUM MULTIPLE ACCESS COMMUNICATION SYSTEM USING SATELLITE OR TERRESTRIAL REPEATERS", assigned to the assignee of the present invention, of which the disclosure thereof is incorporated by reference herein.

A method for transmission of speech in digital communication systems that offers particular advantages in increasing capacity while maintaining high quality of perceived speech is by the use of variable rate speech encoding. The method and apparatus of a particularly useful variable rate speech encoder is described in detail in U.S. Pat. No. 5,414,796, assigned to the assignee of the present invention, of which the disclosure thereof is incorporated by reference herein.

A variable rate speech encoder provides speech data at full rate when the talker is actively speaking, thus using the full capacity of the transmission frames. When a variable rate speech coder is providing speech data at a less that maximum rate, there is excess capacity in the transmission frames. A method for transmitting additional data in transmission frames of a fixed predetermined size, wherein the source of the data for the data frames is providing the data at a variable rate is described in detail in U.S. Pat. No. 5,504,773, assigned to the assignee of the present invention, of which the disclosure thereof is incorporated by reference herein. In the above mentioned patent a method and apparatus is disclosed for combining data of differing types from different sources in a data frame for transmission.

As digital communication systems become more prevalent, applications of the systems are growing. As the applications available grow, there is an increasing probability of differing capabilities between devices on each end of a communication link. Such differing capabilities can be in the form of encoding or decoding frame structure formats, or in service types provided or in data rates supported. As the probability of differing capabilities grows there is an increasing need for service negotiation between devices attempting to communicate in a wireless communication system.

SUMMARY OF THE INVENTION

The present invention is a novel and improved method for performing rate and service negotiation in a digital communication system. In the exemplary environment of a wireless communication system, service negotiation is described between a mobile station and a base station. In the exemplary embodiment, the mobile station and base station communicate data in frames. The data communicated may be primary or speech data, secondary or digital data, or signaling data.

It is an object of the present invention to provide a method and apparatus for service negotiation in a wireless communication system. One possible case when service negotiation might be used includes determining initial type of service when a traffic channel connection is first originated. Another case when service negotiation might be used is in modifying the existing service type while maintaining the traffic channel connection. A third case when service negotiation may be used is dropping the existing service and adding a new service while maintaining the traffic channel connection (e.g., changing from transmitting speech to transmitting modem or facsimile data). A fourth case when service negotiation might be used is in adding a new service while maintaining the traffic channel connection. An example of this is if one is transmitting speech data and then wishes to transmit modem data in parallel. A fifth case where service negotiation may be used is in modifying existing service due to changes in the link such as range between the mobile station and base station (e.g. decreasing transmission rates as range increases and increasing transmission rates as range decreases) or during handoff between base stations where different speech coders or different rate sets may be used.

It is an advantage of the present invention to provide a method and apparatus for performing the service negotiation process with minimum data transfer over common channels, i.e. paging channels or access channels, and if the service configuration is not accomplished over the common channels to continue service negotiation over traffic channels of additional capacity.

In an alternative embodiment, no information about the traffic channel connection would be specified in the origination message with all negotiation taking place over the traffic channel. All that is specified on the access channel is the desire to make the traffic channel connection and service negotiation would be deferred to the traffic channel communications. This type of service negotiation is particularly useful in mobile to satellite communications, but is applicable to all communication systems.

It is further an advantage of the present invention to provide a method and apparatus for changing the service configuration between communicating devices without dropping the traffic channel connection currently in place. Such cases where changing the service configuration without dropping the traffic channel connection is desirable include providing an additional service or completion of a service in a multiple service traffic channel connection and a change in rate compatibility or desirability due to a change in communication environment or logistics. In the present invention, in a wireless communication system in which a first communication device originates a communication service with a second communication device, a method for negotiating service configuration is disclosed, comprising the steps of generating a request message indicative of a service configuration at the first communication device, transmitting the request message, receiving the transmitted message at the second communication device, determining if the service configuration request is acceptable to the second communication device in accordance with the current capabilities of the second communication device, generating a response message in accordance with the determination, and transmitting the response message.

Also, in the present invention an apparatus for transmitting information is disclosed comprising a service negotiator for providing a message indicative of a requested service configuration, and a transmitter for transmitting the service request message. Further disclosed in the present invention is a system for receiving information comprising a receiver for receiving a transmitted message indicative of a requested service configuration, and a service negotiator for determining in accordance with a predetermined set of parameters a response message to the request message.

In addition is disclosed a method is disclosed for changing service configuration of a traffic channel connection without terminating the traffic channel connection. In an exemplary embodiment of a wireless communication system in which a first communication device is communicating with a second communication device and wherein the first communication device requests a change of service configuration without terminating the current traffic channel connection, a method for negotiating a change in service configuration, comprises the steps of generating a request message indicative of a request to change service configuration at the first communication device, transmitting the request message concurrently with transmitting data in the current service configuration, receiving the transmitted message at the second communication message at the second communication device, determining if the service configuration request is acceptable to the second communication device in accordance with the current capabilities of the second communication device, generating a response message in accordance with the determination, and transmitting the response message.

Though the present invention is illustrated in the exemplary embodiment in a wireless communication system, it is equally applicable to any communication system where communication resources may be negotiated. It is envisioned that present invention is equally applicable to wireline communication systems where physical layer capabilities may be negotiated, and in fixed satellite communication systems. In addition the present invention applies equally to cases of one way communication from the base station to the mobile station only or from the mobile station to the base station only.

BRIEF DESCRIPTION OF THE DRAWINGS

The features, objects, and advantages of the present invention will become more apparent from the detailed description set forth below when taken in conjunction with the drawings in which like reference characters identify correspondingly throughout and wherein:

FIG. 1 is an illustration of a wireless communication system;

FIG. 2 is a block diagram of the wireless communication system of the present invention;

FIGS. 3*a*–3*g* is an illustration of an exemplary set mixed data frames; and

FIG. 4 is a state diagram illustrating the method of service configuration negotiation while a call is in progress for the mobile station.

FIG. 5 is a state diagram illustrating the method of service configuration negotiation while a call is in progress for the base station.

DETAILED DESCRIPTION OF THE PREFERRED EMBODIMENTS

In the exemplary embodiment, the present invention is presented in a mobile wireless environment. It is envisioned that the present invention is equally applicable to wireless stationary environments such as wireless local loop applications. Referring to FIG. 1, information may be provided to and from a public switching telephone network (PSTN) to system controller and switch 2, or may be provided to and from controller and switch 2 by another base station if the traffic channel connection is a mobile station to mobile station communication. System controller and switch 2, in turn, provides data to and receives data from base station 4. Base station 4 transmits data to and receives data from mobile station 6. In the exemplary embodiment the signals transmitted between base station 4 and mobile station 6 are spread spectrum communication signals, the generation of the waveforms of which are described in detail in the abovementioned U.S. Pat. No. 4,901,307.

In the exemplary embodiment, there are three separate channels over which information is communicated between base station 4 and mobile station 6. The traffic channel is for one or two way communication of information between mobile station 4 and base station 6 and is uniquely allocated for communications to and from mobile station 6. Information traffic, in the exemplary embodiment, includes primary traffic, secondary traffic and signaling traffic. Primary and secondary traffic communicate digital information data such as speech, modem or facsimile data, and signaling data communicates information to initiate and maintain a link in the communication system such as power control or service negotiation information.

The remaining channels are the paging channel and the access channel. These channels are common to all mobile stations communicating with a base station or set of base stations. Because of the commonality of the these channels, capacity is a significant issue and messages transmitted over them must be restricted to a minimum. The paging channel is for one way communication of messages between base station 4 and the mobile station 6. The access channel is for one way communication of messages between mobile station 6 and the base station 4.

When using the traffic channel, mobile station 4 and base station 6 communicate through the exchange of forward and reverse traffic channel frames. Forward traffic channel frames refer to those frames of information transmitted from base station 4 to mobile station 6. Conversely, reverse traffic channel frames refer to those frames of information transmitted from mobile station 6 to base station 4. Mobile station 6 and base station 4 use a common set of attributes for building and interpreting traffic channel frames. This set of attributes, referred to as a service configuration, consists of the following:

1. Forward and Reverse Multiplex Options: These control the way in which the information bits of the Forward and Reverse Traffic Channel frames, respectively, are divided into various types of traffic, such as signaling traffic, primary traffic and secondary traffic. Associated with each multiplex option is a rate set which specifies the frame structures and transmission rates supported by the multiplex option. The multiplex option used for the Forward Traffic Channel can be the same as that used for the Reverse Traffic Channel, or it can be different.

2. Forward and Reverse Traffic Channel Transmission Rates: These are the transmission rates actually used for the Forward and Reverse Traffic Channels respectively. The transmission rates for the Forward Traffic Channel can include all of the transmission rates supported by the rate set associated with the Forward Traffic Channel multiplex option, or a subset of the supported rates. Similarly, the

transmission rates used for the Reverse Traffic Channel can include all rates supported by the rate set associated with the Reverse Traffic Channel multiplex option, or a subset of the supported rates. The transmission rates used for the Forward Traffic Channel can be the same as those used for the Reverse Traffic Channel, or they can be different.

3. Service Option Connections: These are the services in use on the Traffic Channel. It is possible that there is no service option connection, in which case the mobile station and base station use the Forward and Reverse Traffic Channels to send only signaling traffic; or there can be one or multiple service option connections.

Associated with each service option connection are a service option, a Forward Traffic Channel traffic type, a Reverse Traffic Channel traffic type and a service option connection reference. The associated service option formally defines the way in which traffic bits are processed by the mobile station and base station. For example a service option may specify the speech encoding or decoding format to be used or the data service protocol to be employed. The associated Forward and Reverse Traffic Channel traffic types specify the types of traffic used to support the service option. A service option can require the use of a particular type of traffic, such as primary or secondary, or it can accept more than one traffic type. Likewise, a service option can be one-way, in which case it can be supported on the Forward Traffic Channel only, the Reverse Traffic Channel only, or on either the Forward or Reverse Traffic Channel; or the service option can be two-way, in which case it can be supported on the Forward and Reverse Traffic Channels simultaneously. The associated service option connection reference provides a means for uniquely identifying the service option connection. The reference serves to resolve ambiguity when there are multiple service option connections in use.

Mobile station 6 can propose an initial service configuration at traffic channel connection origination, and can propose new service configurations during Traffic Channel operation. A proposed service configuration can differ greatly from its predecessor or can be very similar. For example, mobile station 6 can propose a service configuration in which all of the service option connections are different from those of the existing configuration; or mobile station 6 can propose a service configuration in which the existing service option connections are maintained with only minor changes, such as a different set of transmission rates or a different mapping of service option connections to Forward and Reverse Traffic Channel traffic types.

If mobile station 6 proposes a service configuration that is acceptable to base station 4, they both begin using the new service configuration. If mobile station 6 proposes a service configuration that is not acceptable to base station 4, base station 4 can reject the proposed service configuration or propose an alternative service configuration. If base station 4 proposes an alternative service configuration, mobile station 6 can accept or reject the service configuration proposed by base station 4, or propose yet another service configuration. This process, called service negotiation, ends when mobile station 6 and base station 4 find a mutually acceptable service configuration, or when either mobile station 6 or base station 4 rejects a service configuration proposed by the other.

It is also possible for base station 4 to propose an initial service configuration when paging mobile station 6 or propose new service configurations during Traffic Channel operation. The service negotiation proceeds as described above, but with the roles reversed.

The following messages are used to support service configuration and negotiation:

1. Service Request Message: Mobile station 6 can use this message to propose a service configuration, or to accept or reject a service configuration proposed in a Service Response Message. Base station 4 can use this message to propose a service configuration, or to reject a service configuration proposed in a Service Response Message.

2. Service Response Message: Mobile station 6 can use this message to accept or reject a service configuration proposed in a Service Request Message, or to propose an alternative service configuration. Base station 4 can use this message to reject a service configuration proposed in a Service Request Message, or to propose an alternative service configuration.

3. Service Connect Message: Base station 4 can use this message to accept a service configuration proposed in a Service Request Message or Service Response Message, and instruct mobile station 6 to begin using the service configuration.

4. Service Connect Completion Message: Mobile station 6 can use this message to acknowledge the transition to a new service configuration.

5. Service Option Control Message: Mobile station 6 and base station 4 can use this message to invoke service option specific functions.

6. Origination Message: Mobile station 6 can use this message to propose an initial service configuration.

7. Channel Assignment Message: Base station 4 can use this message to accept or reject the initial service configuration proposed by mobile station 6 in an Origination Message or a Page Response Message.

8. Page Message: Base station 4 can use this message to propose an initial service configuration.

9. Page Response Message: Mobile station 6 can use this message to accept or reject the initial service configuration proposed by base station 4 in a Page Message, or to propose an alternative initial service configuration.

10. Status Request Message Base station 4 and mobile station 6 can use this message to request service capability information from the mobile station.

11. Status Response Message: Mobile station 6 and base station 4 can use this message to return the service capability information requested by base station 4 in a Status Request Message.

During origination of a mobile station terminated traffic channel connection, base station 4 sends out a page message over the paging channel, which identifies mobile station 6 and requests a service configuration. Mobile station 6 then provides a page response message over the access channel which acknowledges the page, and either accepts the requested service configuration or suggests another service configuration. Base station 4 receives the page response message and then responds with a channel assignment message.

If mobile station 6 has accepted the service configuration requested in the page message or if the alternative service configuration requested by mobile station 6 in the page response message is acceptable to base station 4, base station 4 transmits a channel assignment message accepting or acknowledging the agreed upon service configuration and providing traffic channel information directing mobile station 6 to a traffic channel over which communications may be conducted using the accepted service configuration. If the alternative service configuration requested by mobile station

6 in the page response message is not acceptable to base station 4, then base station 4 transmits a signal containing a channel assignment message rejecting the requested alternative service configuration and providing traffic channel information directing mobile station 6 to a traffic channel over which communications may be conducted using a default service configuration which is a universal default service configuration acceptable to all mobile stations and base stations for communicating signaling data. The service negotiation proceeds over the traffic channel using the universal default service configuration. There also may exist more than one universal default service configuration in which case the base station selects one from a set of universal default service configurations appropriate to the conditions and specifies the selection in the channel assignment message. The service negotiation proceeds over the traffic channel using the universal default service configuration.

In the exemplary embodiment, during service negotiation over the traffic channel messages are transmitted containing four fields of service negotiation information. The first field specifies the service option, and in the exemplary embodiment is sixteen bits long. The second and third specify the forward and reverse multiplex options respectively and each are sixteen bits long. The fourth field specifies the rates. As stated earlier, each multiplex option has an associated rate set. The rate field of the exemplary embodiment has a single bit for each associated rate of the reverse multiplex option and a single bit for each associated rate of the forward multiplex option. These bits are indicative of a whether or not to accommodate each of the rates within the associated set of rates. For example, say that associated with a multiplex option are four rates, a highest and three lesser rates. If the device is not able to accommodate the highest rate but is able to accommodate the lesser rates, then it would set the bit associated with the highest rate to indicate that the highest rate is not acceptable and set three other bits to indicate that they are acceptable. It should be noted that the selection of a rate subset within the set of associated rates is not limited to precluding the highest rates but that any rate subset may be selected during rate negotiation. For example the device may specify that the highest rate is acceptable, but that one of the lesser rates is not acceptable.

In a preferred embodiment each request message specifies a sequence number to be included in the corresponding response message. This sequence number serves to associate a response message with the correct request message. One example in which this is useful is in the case where the mobile station transmits a request message, but the base station is occupied and cannot immediately respond. If the mobile station transmits a second request before it receives a response from the base station to the first request, it is important upon receiving a response message to know to which request the response message is responsive.

At the initiation of a mobile station originated traffic channel connection, mobile station 6 sends out a signal consisting of an origination message specifying a service configuration request and registration information over the access channel to base station 4. Base station 4 responds by transmitting a signal consisting of a channel assignment message and traffic channel information. The channel assignment message contains a response accepting or rejecting the service requested in the origination message.

If base station 4 accepts the service configuration requested in the origination message, then base station 4 provides a message accepting the requested service configuration. If the service configuration requested by the mobile station 6 in the origination response message is not acceptable to base station 4, then base station 4 transmits a channel assignment message providing traffic channel information directing mobile station 6 to a traffic channel over which communications are conducted using the universal default service configuration. Service negotiation continues over the traffic channel using the universal default service configuration until a service configuration is agreed upon or until either base station 4 or mobile station 6 terminates the process by rejecting a service configuration proposed by the other.

In a preferred embodiment, at any point prior to or during service negotiation base station 4 or mobile station 6 may transmit a status request message, requesting information about the capabilities of mobile station 6 or base station 4 respectively. In response to the transmitted status request message the receiving device, either base station 4 or mobile station 6, would transmit a status response message indicating its capabilities. The service negotiator of the requesting device would then in accordance with the received status response message determine a service configuration which would be best for the application. Also, the base station may transmit its capabilities on the paging channel so that the mobile station does not need to request information regarding the capabilities of the base station. In addition, the base station may store the capabilities of the mobile station in a database, thus avoiding the need to request capability information from the mobile station. The mobile station may inform the base station when changes in its capabilities occurs so that the base station can update its database.

FIG. 2 illustrates the base station and mobile station apparatus of the present invention. At the initiation of a mobile station terminated traffic channel connection, service negotiator 20 provides a service configuration request or may request to defer service negotiation to be conducted over the traffic channel. In the exemplary embodiment, service negotiator 20 provides a sixteen bit message specifying the service configuration request. This allows the service negotiator to specify $2^{16}-1$ different possible configurations reserving one configuration message to defer service negotiations to be conducted over the traffic channel.

Multiplexer 22 combines the page message with mobile station address information and provides the combined signal to encoder 24. Encoder 24 encodes the combined signal and provides the encoded signal to transmitter 26. Transmitter 26 upconverts, modulates and amplifies the encoded signal and provides the signal to antenna 28 for transmission over the paging channel. In the exemplary embodiment the modulation format is a spread spectrum modulation format, which is described in detail in U.S. Pat. No. 4,901,307. Although spread spectrum modulation is described in the aforementioned patent at a spreading rate of 1.25 MHz, the present invention is equally applicable to spreading rates of 2.5 MHz, 5.0 MHz and any other spreading rates. The present invention is equally applicable to any known modulation format.

The transmitted signal is received at mobile station 30 by antenna 32. The received signal is provided by antenna 32 through duplexer 48 to receiver 34. Receiver 34 downconverts and demodulates the received signal and provides the signal to decoder 36. Decoder 36 decodes the received signal and provides the decoded signal to demultiplexer 38. Demultiplexer 38 separates the page message from the mobile station address data and provides the page request message to service negotiator 40.

Service negotiator 40 determines in accordance with the current mobile station capabilities a page response message

which indicates whether to accept or reject the requested service configuration of the page message or whether to suggest an alternative service configuration and if so which alternative service configuration to suggest. Service negotiator 40 provides the page response message to multiplexer 48. Multiplexer 48 combines the page response message with additional information which may include registration parameters and other mobile station parameters from, e.g., a vocoder 42, modem 44, and facsimile apparatus 46. The combined signal is provided to encoder 50. Encoder 50 encodes the combined data and provides the encoded signal to transmitter 52. Transmitter 52 upconverts, modulates and amplifies the encoded signal and provides it through duplexer 54 to antenna 32 for transmission over the access channel.

The signal transmitted from mobile station 30 is received at base station 10 by antenna 12. The received signal is provided by antenna 12 to receiver 14 where the signal is downconverted, demodulated and provided to decoder 16. Decoder 16 decodes the signal and provides the decoded signal to demultiplexer 18. Demultiplexer 18 separates the decoded signal into the page response message and other data transmitted by mobile station 30.

The page response message is provided to service negotiator 40. If the page response message indicates acceptance of the service configuration requested by the page message or if the alternative service configuration of the page response message is acceptable to base station 10, then service negotiator 20 provides a channel assignment message accepting or acknowledging the agreed upon service configuration to multiplexer 48. Furthermore service negotiator 22 provides a signal indicative of the agreed upon service configuration to encoder 24 and decoder 20 which encode and decode future data including future messages on the traffic channel in accordance with the agreed upon service configuration. If the requested alternative service configuration of the page response message is not acceptable then service negotiator 20 provides a channel assignment message specifying the universal default service configuration to multiplexer 22.

Multiplexer 22 combines the channel assignment message with traffic channel information and provides the combined signal to encoder 24. Encoder 24 encodes the combined message and provides the encoded message to transmitter 26, which in turn upconverts, modulates and amplifies the signal, then provides it to antenna 28 for transmission over the paging channel.

The transmitted signal received at antenna 32 is provided through duplexer 54 to receiver 34 where it is downconverted, demodulated and provided to decoder 36. Decoder 36 decodes the signal and provides it to demultiplexer 38. Demultiplexer 38 separates the traffic channel information from the channel assignment message. Demultiplexer 38 provides the traffic channel information to receiver 34 and transmitter 52 and provides the service negotiation information to service negotiator 40. If a service configuration is not agreed upon then service negotiator 40 provides a signal indicative of the universal default service configuration to encoder 50 and decoder 36, and service negotiation continues over the traffic channel until a service configuration is agreed upon or the traffic channel connection is dropped.

In the case of traffic channel connection initiation in a mobile station originated traffic channel connection, service negotiator 40 in mobile station 30 provides an origination message indicative of a service configuration requested by mobile station 30 to multiplexer 48. Multiplexer 48 may combine the origination message with other information, such as registration information, numbering plan information and dialed digit information and provides the combined signal to encoder 50. Encoder 50 encodes the combined signal and provides the encoded signal to transmitter 52. Transmitter 52 upconverts, modulates and amplifies the encoded signal, and provides it through duplexer 54 to antenna 32 for transmission over the access channel.

Base station 10 receives the transmitted signal at antenna 12. The received signal is provided by antenna 12 to receiver 14 where the signal is downconverted, demodulated and provided to decoder 16. Decoder 16 decodes the signal and provides the decoded signal to demultiplexer 18. Demultiplexer 18 separates the origination information from registration information and numbering plan information and provides the origination message to service negotiator 20. Service negotiator 20 determines whether the service configuration requested in the origination message is acceptable.

Service negotiator 20 provides a channel assignment message accepting the requested service configuration or specifying that the universal default service configuration is to be used. The service configuration channel assignment message is combined in multiplexer 22 with traffic channel information and the combined signal is provided to encoder 24. Encoder 24 encodes the combined signal and provides the encoded signal to transmitter 26. Transmitter 26 upconverts, modulates and amplifies the encoded signal and provides it to antenna 28 for transmission over the paging channel.

Mobile station 30 receives the transmitted signal at antenna 32. The received signal is provided through duplexer 54 to receiver 34 which downconverts and demodulates the signal and provides the signal to decoder 36. Decoder 36 decodes the signal and provides the decoded signal to demultiplexer 38. Demultiplexer 38 separates the channel assignment message from the traffic channel information. Demultiplexer 38 provides the traffic channel information to receiver 34 and transmitter 52 with which the transmitter and receiver set up for transmission and reception of information over the traffic channel. Demultiplexer 38 provides the channel assignment message to service negotiator 40. If the channel assignment message indicates base station 10 has accepted the requested service configuration, then service negotiator 40 provides the information regarding the accepted service configuration to decoder 36 and encoder 38. If the service configuration channel assignment message indicates base station 10 has rejected the requested service configuration, then service negotiator 40 provides the information regarding the universal default service configuration to decoder 36 and encoder 38 and service configuration negotiation continues over the traffic channel. Negotiation continues until a mutually acceptable service configuration is found or the traffic channel connection is dropped.

An exemplary set of frame formats as specified in the forward and reverse multiplex options of the service configuration is illustrated in FIGS. 3*a*–*g*. The method and apparatus for providing multiplexed frames of data is described in detail in copending U.S. patent application Ser. No. 08/171,146. FIG. 3*a* illustrates an exemplary generic frame format. The frame of FIG. 3*a* consists of three fields: a frame format field, a traffic field and an overhead field. The frame format field tells the receiving device which frame format of the set of frame formats allowed by the current multiplex option is applicable to decoding the current frame of information. The traffic field contains the data that is

being transmitted. In the exemplary embodiment, there are three types of traffic. Traffic, in the exemplary embodiment, includes primary traffic, secondary traffic and signaling traffic. Primary and secondary traffic communicate digital information data such as speech, modem or facsimile data, and signaling data communicates information to initiate and maintain a link in the communication system such power control information or service negotiation information. Overhead data is data transmitted to increase the quality of the frames being transmitted such as error correction bits or decoder tail bits.

FIG. 3*b* illustrates a frame with only primary or speech traffic being transmitted. FIG. 3*c* illustrates a frame in which both speech and signaling traffic are being transmitted simultaneously, and FIG. 3*d* illustrates a frame in which primary traffic and secondary traffic are being transmitted simultaneously. FIGS. 3*e* and 3*f* illustrate frames in which only signaling traffic or secondary are being transmitted. In FIG. 3*g*, primary secondary and signaling traffic are all being transmitted simultaneously.

In an exemplary service configuration, a variable rate vocoder, such as that describe in copending U.S. patent application Ser. No. 08/004,484, is used to provide the primary traffic. When the primary traffic is provided at less than a predetermined maximum data rate, then there exists excess capacity in the transmitted frames. This excess capacity can be used to accommodate the simultaneous transmission of secondary or signaling traffic. In the exemplary embodiment, secondary or signaling traffic is buffered until a frame of less than the predetermined maximum rate for primary traffic is provided by the variable rate vocoder, at which time a portion of the buffered secondary or signaling traffic is provided in the excess capacity of the frame. In a preferred, yet exemplary embodiment, when the transmitting device is aware of secondary or signaling traffic for transmission it signals the vocoder and the vocoder forces a set of frames to a lower than maximum rate in which the secondary or signaling traffic can be provided.

Referring again to FIG. 2, primary traffic is provided by vocoder 42, while secondary traffic is provided by modem 44 or facsimile 46. Signaling traffic is provided by a microprocessor (not shown) via the external signaling line to multiplexer 48 and also by service negotiator 40. Multiplexer 48 combines the various data forms into the frame formats in accordance with the selected multiplex option.

One important feature of the present invention is the capability of performing the service negotiation without interrupting the currently selected service in progress. An example of a case when this may be desirable occurs when a user is communicating by means of a selected service configuration, and decides that it is necessary or desirable to perform an additional operation in parallel or in place of the previously selected service configuration. A specific example is if a user is transmitting speech data only, but during the course of the conversation wishes to transmit facsimile or modem data in parallel. The user informs the service negotiator of the desire to transmit secondary data and the service negotiator then prepares the configuration to accommodate the additional function.

Another example may occur when a user is transmitting at a data rate or set of data rates, but because of logistics or other factors the energy required of the mobile station to support the data rate becomes unacceptably high. In an exemplary embodiment, the mobile station may receive information frown the base station indicative of the quality of received traffic frames. If the quality level becomes too low then it may be necessary for the mobile station to transmit at lower rate or set of rates. By reducing the data rate the mobile station could if desired keep its transmission power the same while increasing its energy per bit. Any method of detecting a need to modify the data rate is equally applicable to the present invention. Some of the methods for determining that the data rates should be reduced include:

(a) mobile station detection of high frame error rate on forward link;

(b) base station detection of high frame error rate on reverse link;

(c) mobile station detects its power is at a maximum for the reverse link;

(d) base station detects its power is at a maximum for the forward link;

(e) mobile station detects that received power is low on forward link;

(f) base station detects that received power is low on reverse link;

(g) base station to mobile station range is large; and

(h) mobile station location is poor.

Conversely, some of the methods for determining that the data rates should be increased include:

(a) mobile station detection of low frame error rate on forward link;

(b) base station detection of low frame error rate on reverse link;

(c) mobile station detects its power is lower than a threshold for the reverse link;

(d) base station detects its power is lower than a threshold for the forward link;

(e) mobile station detects that received power is high on forward link;

(f) base station detects that received power is high on reverse link;

(g) base station to mobile station range is low; and

(h) mobile station location is good.

FIG. 4 illustrates a state diagram for the mobile station of the present invention. The following are the definition of the states or subfunction of the mobile station of the present invention:

1. Normal Service Subfunction—While this subfunction is active, the mobile station processes service configuration requests from the user and from the base station.

2. Waiting for Service Request Message Subfunction—While this subfunction is active, the mobile station waits to receive a Service Request Message.

3. Waiting for Service Response Message Subfunction—While this subfunction is active, the mobile station waits to receive a Service Response Message.

4. Waiting for Service Connect Message Subfunction—While this subfunction is active, the mobile station waits to receive a Service Connect Message.

5. Waiting for Service Action Time Subfunction—While this subfunction is active, the mobile station waits for the action time associated with a new service configuration and then sends a Service Connect Completion Message.

At any given time during traffic channel operation, only one of the service subfunctions is active and the mobile station performs the processing associated with that subfunction. For example, when the mobile station first begins communication on the traffic channel, the normal service subfunction is active. Each of the other subfunctions can become active in response to various events which occur during traffic channel operation. In addition it is envisioned as in the case of traffic channel connection initiation that at any point in the service negotiation status request and response messages may be exchanged and service negotiation conducted in accordance with the exchanged capability information.

The mobile station transmits service request messages and service response messages that accept or reject a requested service configuration or suggest an alternative service configuration. The base station transmits request and response messages that reject or suggest an alternative service configuration. If the base station accepts a requested service configuration, it transmits a connect message, which indicates the acceptance of the requested service configuration and specifies an action time at which the agreed upon service configuration change will occur.

Referring to FIG. 4, the service negotiation procedure for the mobile station is illustrated. In the normal service subfunction block 70, the mobile station may receive a request message from the base station or may receive a request from the user for a new service configuration. If the mobile station receives a request for a new service configuration from the user, the mobile station sends a service request message indicative of the desired new service configuration to the base station and enters the waiting for service response message subfunction block 72.

When the mobile station receives a service request message, it may as previously stated accept or reject the requested service or it may suggest an alternative service. If the mobile station accepts the requested service configuration, it sends a response message accepting the requested configuration and enters the waiting for connect message subfunction block 78. If the mobile station rejects the requested service configuration, then the service negotiation is terminated and the mobile station enters the normal service sub function block 70. Lastly, if the mobile station suggests an alternative service configuration it sends a service response message proposing the alternative configuration and enters the waiting for service request subfunction block 76.

If the mobile station is in waiting for service request message subfunction block 76, it may receive a service request message proposing a service configuration or rejecting or it may receive a connect message from the base station. If the mobile station receives a request message rejecting the proposed service configuration, then service negotiation is terminated and the mobile station enters normal service sub function block 70. Also, if the mobile station receives a service request message proposing a service configuration, the mobile station may reject the proposed service configuration, terminating service negotiation and entering normal service subfunction block 70.

In addition, if the mobile station is in waiting for service request message subfunction block 76, and receives a message proposing a service configuration the mobile station may send a service response message proposing an alternative service configuration and in this case the mobile station will remain in waiting for service request message subfunction block 76. If the mobile station is in waiting for service request message subfunction block 76, and receives a service request message requesting an acceptable configuration, then the mobile station transmits a service response message accepting the proposed service configuration. If the mobile station receives a service connect message indicating that the service configuration requested by the mobile station is acceptable to the base station, then the mobile station enters the waiting for service action time subfunction 74. The connect message specifies the service action time when both mobile station and base station change over to the new agreed upon service configuration.

If the mobile station is in the waiting for service response message subfunction block 72, it may receive a service response message rejecting or proposing an alternative service configuration or it may receive a connect message. If it receives a connect message it enters the waiting for service action time subfunction block 74 and waits until the action time to change to the new agreed upon service configuration. If it receives a service response message rejecting a proposed service configuration, then it returns to normal service subfunction block 70. Also if it receives a response message proposing an unacceptable service configuration, it may reject the proposed service configuration, in which case it sends a service request message rejecting the proposed service configuration and returns to normal service subfunction block 70. If it receives a service response message proposing an alternative service configuration, the mobile station may also transmit a service request message proposing another alternative service configuration and remain in the waiting for service response message subfunction block 72. Lastly, the mobile station may receive a service response message proposing an acceptable service configuration, in which case the mobile station will send a service request message accepting the proposed service configuration and enter waiting for service connect message subfunction block 78.

If the mobile station is in waiting for service connect message subfunction block 78, then a service configuration agreement has been reached and all that remains is to receive information upon when the change in service configuration should be conducted. Upon receiving the service connect message the mobile station enters the waiting for the service action time subfunction 74. In waiting for service action time sub function block 74, the mobile station waits for the time to change to the new service configuration. At the action time the mobile station and the base station simultaneously change over to the new service configuration. After the action time the mobile station transmits a service connect completion message to the base station and re-enters the normal service subfunction block 70 where communication is conducted under the new configuration.

FIG. 5 illustrates a state diagram for the base station of the present invention. The following are the definition of the states or subfunction of the base station of the present invention:

1. Normal Service Subfunction—While this subfunction is active, the base station processes service configuration requests from the personal station and sends service configuration requests to the personal station.

2. Waiting for Service Request Message Subfunction—While this subfunction is active, the base station waits to receive a Service Request Message.

3. Waiting for Service Response Message Subfunction—While this subfunction is active, the base station waits to receive a Service Response Message.

4. Waiting for Service Action Time Subfunction—While this subfunction is active, the base station waits for the action time associated with a new service configuration.

5. Waiting for Service Connect Completion Message—While this subfunction is active, the base station waits to receive a Service Connect Completion Message.

At any given time during traffic channel operation, only one of the service subfunctions is active and the base station performs the processing associated with that subfunction. For example, when the base station first enters upon communication on the traffic channel, the normal service subfunction is active. Each of the other subfunctions can become active in response to various events which occur during traffic channel operation.

In normal service subfunction block 100, the base station is communicating with the mobile station. The base station

may receive a service request message or may need to request a new service configuration. If the base station needs to request a new service configuration, it transmits a service request message proposing a new configuration and enters the waiting for service response message subfunction block **102**. If it receives a service request message proposing an acceptable configuration, it transmits a service connect message indicative of acceptance of the proposed service configuration and including an action time message indicative of the time at which the change to the new service configuration will be made and enters the waiting for service action time subfunction block **104**. If the base station receives a service request message proposing an unacceptable service configuration, it may send a service response message rejecting the proposed service configuration and remain in the normal service subfunction **100** or the base station may send a service response message proposing an alternative service configuration and enter waiting for service request message subfunction block **108**.

If the base station is in waiting for service request message subfunction block **108**, it may receive a service request message indicating acceptance of a proposed service configuration or proposing an acceptable alternative service configuration, in which case the base station sends a service connect message including a service action time and enters the waiting for service action time subfunction block **104**. If the base station receives a service request message proposing a service configuration, it may also send a service response message proposing an alternative service configuration. If the base station receives a service request message rejecting the proposed service configuration, then service negotiation is terminated and the base station enters normal service subfunction **100**. Also if the base station receives a service request message proposing an unacceptable configuration, it may send a service response message rejecting the proposed configuration, terminating service negotiation and enter normal service subfunction block **100**.

If the base station is in waiting for response message subfunction block **102**, it may receive a service response message accepting or rejecting a proposed service configuration or proposing an alternative service configuration. If it receives a service response message rejecting a proposed service configuration then service negotiation is terminated and it returns to normal service subfunction block **100**. If the base station receives a service response message proposing an unacceptable configuration it may send a service request message rejecting the proposed service configuration terminating service negotiation and return to normal service subfunction block **100** or it may send a service request message proposing an alternative configuration and remain in waiting for service response message subfunction block **102**. If the base station receives a service response message accepting a proposed service configuration or proposing an acceptable alternative service configuration then it sends a service connect message including an action time and enters the waiting for service action time sub function block **104**.

If the base station is in waiting for service action time block **104** it waits until the action time arrives and then uses the new service configuration and enters the waiting for service connect completion message subfunction **106**. Upon receiving service connect completion message **106** the base station enters normal service subfunction block **100**.

The previous description of the preferred embodiments is provided to enable any person skilled in the art to make or use the present invention. The various modifications to these embodiments will be readily apparent to those skilled in the art, and the generic principles defined herein may be applied to other embodiments without the use of the inventive faculty. Thus, the present invention is not intended to be limited to the embodiments shown herein but is to be accorded the widest scope consistent with the principles and novel features disclosed herein.

We claim:

1. In a wireless communication system in which a first communication device originates a communication service with a second communication device, a method for negotiating service configuration, comprising the steps of:

generating a request message indicative of a requested service configuration of said first communication device;

transmitting said request message;

receiving said request message at said second communication device;

determining if said requested service configuration is acceptable to said second communication device in accordance with current capabilities of said second communication device;

generating a response message in accordance with said determination;

transmitting said response message from said second communication device and receiving said response message at said first communication device; and

determining, at said first communication device, whether to establish communication with said second communication device based on said response message, wherein said messages are transmitted over a common channel provided for general messaging services between communication devices of said wireless communication system, and wherein if said response message rejects said requested service configuration said method further comprises the step of communicating service negotiation messages over a traffic channel, said traffic channel being a communication channel allocated for communication between said first and second communication devices.

2. The method of claim 1 wherein said response message is indicative of acceptance, rejection or suggesting an alternative service configuration.

3. The method of claim 1, wherein said service configuration provides a forward link multiplex option.

4. The method of claim 1, wherein said service configuration provides a reverse link multiplex option.

5. The method of claim 1, wherein said service configuration provides forward link transmission rates.

6. The method of claim 1, wherein said service configuration provides reverse link transmission rates.

7. The method of claim 1, wherein said service configuration provides a service option.

8. The method of claim 1, wherein said response message is transmitted within a channel assignment message.

9. The method of claim 8, wherein the identity of said traffic channel is provided in said channel assignment message.

10. The method of claim 1, wherein said first communication device is a mobile station and said request message is transmitted over an access channel.

11. The method of claim 1, wherein said first communication device is a base station and said request message is transmitted over a paging channel.

12. The method of claim 1, wherein said second communication device is a mobile station and said response message is transmitted over an access channel.

13. The method of claim 1, wherein said second communication device is a base station and said response message is transmitted over a paging channel.

14. The method of claim 1, wherein said first communication device is a mobile station and said request message is transmitted over an access channel and wherein said second communication device is a base station and said response message is transmitted over a paging channel.

15. The method of claim 1, wherein said first communication device is a base station and said request message is transmitted over a paging channel and wherein said second communication device is a mobile station and said response message is transmitted over an access channel.

16. In a wireless communication system in which a first communication device originates a communication service with a second communication device, a system for negotiating service configuration, comprising

service request generator means for generating a request message indicative of a service configuration of a predetermined set of first communication device service configurations at said first communication device;

transmitter means for transmitting said request message;

receiver means for receiving said transmitted message at said second communication device;

service control means for determining if said service configuration request is acceptable to said second communication device in accordance with current capabilities of said second communication device;

service response generator for generating a response message in accordance with said determination; and

second transmitter means for transmitting said response message wherein said request message and said response message are transmitted over a common channel and wherein said common channel is provided for general messaging services between communication devices of said wireless communication system, and also wherein if said response message rejects said requested service configuration said system communicating service negotiation messages over a traffic channel, said traffic channel being a communications channel allocated for conducting communications between said first communications device and said second communications device.

17. The system of claim 16, wherein said service configuration provides a forward link multiplex option.

18. The system of claim 16, wherein said service configuration provides a reverse link multiplex option.

19. The system of claim 16, wherein said service configuration provides forward link transmission rates.

20. The system of claim 16, wherein said service configuration provides reverse link transmission rates.

21. The system of claim 16, wherein said service configuration provides a service option.

22. The system of claim 16, wherein said response message is transmitted within a channel assignment message.

23. The system of claim 22, wherein the identity of said traffic channel is provided in said channel assignment message.

24. The system of claim 16, wherein said first communication device is a mobile station and said request message is transmitted over an access channel.

25. The system of claim 16, wherein said first communication device is a base station and said request message is transmitted over a paging channel.

26. The system of claim 16, wherein said second communication device is a mobile station and said response message is transmitted over an access channel.

27. The system of claim 16, wherein said second communication device is a base station and said response message is transmitted over a paging channel.

28. The system of claim 16, wherein said first communication device is a mobile station and said request message is transmitted over an access channel and wherein said second communication device is a base station and said response message is transmitted over a paging channel.

29. The system of claim 16, wherein said first communication device is a base station and said request message is transmitted over a paging channel and wherein said second communication device is a mobile station and said response message is transmitted over an access channel.

* * * * *

AO 120 (Rev.3/04)

TO: Mail Stop 8 Director of the U.S. Patent and Trademark Office P.O. Box 1450 Alexandria, VA 22313-1450	REPORT ON THE FILING OR DETERMINATION OF AN ACTION REGARDING A PATENT OR TRADEMARK

In Compliance with 35 U.S.C. § 290 and/or 15 U.S.C. § 1116 you are hereby advised that a court action has been filed in the U.S. District Court San Diego on the following Patents or Trademarks:

DOCKET NO.	DATE FILED	U.S. DISTRICT COURT
05cv1392	7/11/05	United States District Court, Southern District of California
PLAINTIFF Qualcomm Inc		DEFENDANT Broadcom Corp

PATENT OR TRADEMARK NO.	DATE OF PATENT OR TRADEMARK	HOLDER OF PATENT OR TRADEMARK
1 5,544196	8/6/96	Qualcomm
2 5,257,283	10/26/93	Qualcomm
3 5,568,483	10/22/96	Qualcomm
4 5,778,338	7/7/98	Qualcomm
5 5,655,220	8/5/97	Qualcomm (see below for more)

In the above-entitled case, the following patent(s)/trademark(s) have been included:

DATE INCLUDED	INCLUDED BY ☐ Amendment ☐ Answer ☐ Cross Bill ☐ Other Pleading	
PATENT OR TRADEMARK NO.	**DATE OF PATENT OR TRADEMARK**	**HOLDER OF PATENT OR TRADEMARK**
1 5,590,408	12/31/96	Qualcomm
2 5,638,412	6/10/97	Qualcomm
3		
4		
5		

In the above-entitled case, the following decision has been rendered or judgment issued:

DECISION/JUDGMENT		
CLERK	(BY) DEPUTY CLERK	DATE

Copy 1 - Upon initiation of action, mail this copy to Director
Copy 2 - Upon filing document adding patent(s), mail this copy to Director
Copy 3 - Upon termination of action, mail this copy to Director
Copy 4 - Case file copy

JS 44 (Rev. 11/04)

CIVIL COVER SHEET

ORIGINAL

The JS 44 civil cover sheet and the information contained herein neither replace nor supplement the filing and service of pleadings or other papers as required by law, except as provided by local rules of court. This form, approved by the Judicial Conference of the United States in September 1974, is required for the use of the Clerk of Court for the purpose of initiating the civil docket sheet. (SEE INSTRUCTIONS ON THE REVERSE OF THE FORM.)

I. (a) PLAINTIFFS
QUALCOMM Incorporated

DEFENDANTS
Broadcom Corporation

05 JUL 11 AM 8:43

(b) County of Residence of First Listed Plaintiff San Diego
(EXCEPT IN U.S. PLAINTIFF CASES)

County of Residence of First Listed Orange
(IN U.S. PLAINTIFF CASES ONLY)
NOTE: IN LAND CONDEMNATION CASES, USE THE LOCATION OF THE TRACT OF LAND INVOLVED.

(c) Attorney's (Firm Name, Address, and Telephone Number)
Barry J. Tucker, 164163
Heller Ehrman LLP
4350 La Jolla Village Drive, 7th Floor
San Diego, CA 92122
(858) 450-8400

Attorneys (If Known)

BY: DEPUTY

'05 CV 1392 J (BLM)

II. BASIS OF JURISDICTION (Place an "X" in One Box Only)

- ☐ 1 U.S. Government Plaintiff
- ☒ 3 Federal Question (U.S. Government Not a Party)
- ☐ 2 U.S. Government Defendant
- ☐ 4 Diversity (Indicate Citizenship of Parties in Item III)

III. CITIZENSHIP OF PRINCIPAL PARTIES (Place an "X" in One Box for Plaintiff and One Box for Defendant)
(For Diversity Cases Only)

	PTF	DEF		PTF	DEF
Citizen of This State	☐ 1	☐ 1	Incorporated *or* Principal Place of Business In This State	☐ 4	☐ 4
Citizen of Another State	☐ 2	☐ 2	Incorporated *and* Principal Place of Business In Another State	☐ 5	☐ 5
Citizen or Subject of a Foreign Country	☐ 3	☐ 3	Foreign Nation	☐ 6	☐ 6

IV. NATURE OF SUIT (Place an "X" in One Box Only)

CONTRACT
- ☐ 110 Insurance
- ☐ 120 Marine
- ☐ 130 Miller Act
- ☐ 140 Negotiable Instrument
- ☐ 150 Recovery of Overpayment & Enforcement of Judgment
- ☐ 151 Medicare Act
- ☐ 152 Recovery of Defaulted Student Loans (Excl. Veterans)
- ☐ 153 Recovery of Overpayment of Veteran's Benefits
- ☐ 160 Stockholders' Suits
- ☐ 190 Other Contract
- ☐ 195 Contract Product Liability
- ☐ 196 Franchise

TORTS

PERSONAL INJURY
- ☐ 310 Airplane
- ☐ 315 Airplane Product Liability
- ☐ 320 Assault, Libel & Slander
- ☐ 330 Federal Employers' Liability
- ☐ 340 Marine
- ☐ 345 Marine Product Liability
- ☐ 350 Motor Vehicle
- ☐ 355 Motor Vehicle Product Liability
- ☐ 360 Other Personal Injury

PERSONAL INJURY
- ☐ 362 Personal Injury—Med. Malpractice
- ☐ 365 Personal Injury—Product Liability
- ☐ 368 Asbestos Personal Injury Product Liability

PERSONAL PROPERTY
- ☐ 370 Other Fraud
- ☐ 371 Truth in Lending
- ☐ 380 Other Personal Property Damage
- ☐ 385 Property Damage Product Liability

REAL PROPERTY
- ☐ 210 Land Condemnation
- ☐ 220 Foreclosure
- ☐ 230 Rent Lease & Ejectment
- ☐ 240 Torts to Land
- ☐ 245 Tort Product Liability
- ☐ 290 All Other Real Property

CIVIL RIGHTS
- ☐ 441 Voting
- ☐ 442 Employment
- ☐ 443 Housing/ Accommodations
- ☐ 444 Welfare
- ☐ 445 Amer. w/Disabilities - Employment
- ☐ 446 Amer. w/Disabilities - Other
- ☐ 440 Other Civil Rights

PRISONER PETITIONS
- ☐ 510 Motions to Vacate Sentence

Habeas Corpus:
- ☐ 530 General
- ☐ 535 Death Penalty
- ☐ 540 Mandamus & Other
- ☐ 550 Civil Rights
- ☐ 555 Prison Condition

FORFEITURE/PENALTY
- ☐ 610 Agriculture
- ☐ 620 Other Food & Drug
- ☐ 625 Drug Related Seizure of Property 21 USC 881
- ☐ 630 Liquor Laws
- ☐ 640 R.R. & Truck
- ☐ 650 Airline Regs.
- ☐ 660 Occupational Safety/Health
- ☐ 690 Other

LABOR
- ☐ 710 Fair Labor Standards Act
- ☐ 720 Labor/Mgmt. Relations
- ☐ 730 Labor/Mgmt.Reporting & Disclosure Act
- ☐ 740 Railway Labor Act
- ☐ 790 Other Labor Litigation
- ☐ 791 Empl. Ret. Inc. Security Act

BANKRUPTCY
- ☐ 422 Appeal 28 USC 158
- ☐ 423 Withdrawal 28 USC 157

PROPERTY RIGHTS
- ☐ 820 Copyrights
- ☒ 830 Patent
- ☐ 840 Trademark

SOCIAL SECURITY
- ☐ 861 HIA (1395ff)
- ☐ 862 Black Lung (923)
- ☐ 863 DIWC/DIWW (405(g))
- ☐ 864 SSID Title XVI
- ☐ 865 RSI (405(g))

FEDERAL TAX SUITS
- ☐ 870 Taxes (U.S. Plaintiff or Defendant)
- ☐ 871 IRS—Third Party 26 USC 7609

OTHER STATUTES
- ☐ 400 State Reapportionment
- ☐ 410 Antitrust
- ☐ 430 Banks and Banking
- ☐ 450 Commerce
- ☐ 460 Deportation
- ☐ 470 Racketeer Influenced and Corrupt Organizations
- ☐ 480 Consumer Credit
- ☐ 490 Cable/Sat TV
- ☐ 810 Selective Service
- ☐ 850 Securities/Commodities/ Exchange
- ☐ 875 Customer Challenge 12 USC 3410
- ☐ 890 Other Statutory Actions
- ☐ 891 Agricultural Acts
- ☐ 892 Economic Stabilization Act
- ☐ 893 Environmental Matters
- ☐ 894 Energy Allocation Act
- ☐ 895 Freedom of Information Act
- ☐ 900 Appeal of Fee Determination Under Equal Access to Justice
- ☐ 950 Constitutionality of State Statutes

V. ORIGIN (Place an "X" in One Box Only)
☒ 1 Original Proceeding ☐ 2 Removed from State Court ☐ 3 Remanded from Appellate Court ☐ 4 Reinstated or Reopened ☐ 5 Transferred from another district (specify) ☐ 6 Multidistrict Litigation ☐ 7 Appeal to District Judge from Magistrate Judgment

VI. CAUSE OF ACTION
Cite the U.S. Civil Statute under which you are filing (**Do not cite jurisdictional statutes unless diversity**):
35 U.S.C. Sections 271 et seq.
Brief description of cause:
Patent infringement

VII. REQUESTED IN COMPLAINT: ☐ CHECK IF THIS IS A CLASS ACTION UNDER F.R.C.P. 23 **DEMAND $**
CHECK YES only if demanded in complaint: **JURY DEMAND:** ☒ Yes ☐ No

VIII. RELATED CASE(S) IF ANY (See instructions): JUDGE _____ DOCKET NUMBER _____

DATE
July 11, 2005

SIGNATURE OF ATTORNEY OF RECORD
Barry J. Tucker

FOR OFFICE USE ONLY

RECEIPT # _____ AMOUNT _____ APPLYING IFP _____ JUDGE _____ MAG. JUDGE _____

115259 $250.00

American LegalNet, Inc. www.USCourtForms.com

INSTRUCTIONS FOR ATTORNEYS COMPLETING CIVIL COVER SHEET FORM JS 44

Authority For Civil Cover Sheet

The JS 44 civil cover sheet and the information contained herein neither replaces nor supplements the filings and service of pleading or other papers as required by law, except as provided by local rules of court. This form, approved by the Judicial Conference of the United States in September 1974, is required for the use of the Clerk of Court for the purpose of initiating the civil docket sheet. Consequently, a civil cover sheet is submitted to the Clerk of Court for each civil complaint filed. The attorney filing a case should complete the form as follows:

I. **(a) Plaintiffs-Defendants.** Enter names (last, first, middle initial) of plaintiff and defendant. If the plaintiff or defendant is a government agency, use only the full name or standard abbreviations. If the plaintiff or defendant is an official within a government agency, identify first the agency and then the official, giving both name and title.

(b.) County of Residence. For each civil case filed, except U.S. plaintiff cases, enter the name of the county where the first listed plaintiff resides at the time of filing. In U.S. plaintiff cases, enter the name of the county in which the first listed defendant resides at the time of filing. (NOTE: In land condemnation cases, the county of residence of the "defendant" is the location of the tract of land involved.)

(c) Attorneys. Enter the firm name, address, telephone number, and attorney of record. If there are several attorneys, list them on an attachment, noting in this section "(see attachment)".

II. **Jurisdiction**. The basis of jurisdiction is set forth under Rule 8(a), F.R.C.P., which requires that jurisdictions be shown in pleadings. Place an "X" in one of the boxes. If there is more than one basis of jurisdiction, precedence is given in the order shown below.

United States plaintiff. (1) Jurisdiction based on 28 U.S.C. 1345 and 1348. Suits by agencies and officers of the United States are included here.

United States defendant. (2) When the plaintiff is suing the United States, its officers or agencies, place an "X" in this box.

Federal question. (3) This refers to suits under *28 U.S.C. 1331*, where jurisdiction arises under the Constitution of the United States, an amendment to the Constitution, an act of Congress or a treaty of the United States. In cases where the U.S. is a party, the U.S. plaintiff or defendant code takes precedence, and box 1 or 2 should be marked.

Diversity of citizenship. (4) This refers to suits under 28 U.S.C. 1332, where parties are citizens of different states. When Box 4 is checked, the citizenship of the different parties must be checked. (See Section III below; federal question actions take precedence over diversity cases.)

III. **Residence (citizenship) of Principal Parties.** This section of the JS-44 is to be completed if diversity of citizenship was indicated above. Mark this section for each principal party.

IV. **Nature of Suit**. Place an "X" in the appropriate box. If the nature of suit cannot be determined, be sure the cause of action, in Section VI below, is sufficient to enable the deputy clerk or the statistical clerks in the Administrative Office to determine the nature of suit. If the cause fits more than one nature of suit, select the most definitive.

V. **Origin**. Place an "X" in one of the seven boxes.

Original Proceedings. (1) Cases which originate in the United States district courts.

Removed from State Court. (2) Proceedings initiated in state courts may be removed to the district courts under Title 28 U.S.C., Section 1441. When the petition for removal is granted, check this box.

Remanded from Appellate Court. (3) Check this box for cases remanded to the district court for further action. Use the date of remand as the filing date.

Reinstated or Reopened. (4) Check this box for cases reinstated or reopened in the district court. Use the reopening date as the filing date.

Transferred from Another District. (5) For cases transferred under Title 28 U.S.C. Section 1404(a) Do not use this for within district transfers or multidistrict litigation transfers.

Multidistrict Litigation. (6) Check this box when a multidistrict case is transferred into the district under authority of Title 28 U.S.C. Section 1407. When this box is checked, do not check (5) above.

Appeal to District Judge from Magistrate Judgment. (7) Check this box for an appeal from a magistrate judge's decision.

VI. **Cause of Action**. Report the civil statute directly related to the cause of action and give a brief description of the cause. **Do not cite jurisdictional statutes unless diversity.** Example: U.S. Civil Statute: 47 USC 553
Brief Description: Unauthorized reception of cable service

VII. **Requested in Complaint**. Class Action. Place an "X" in this box if you are filing a class action under Rule 23, F.R.Cv.P.

Demand. In this space enter the dollar amount (in thousands of dollars) being demanded or indicate other demand such as a preliminary injunction.

Jury Demand. Check the appropriate box to indicate whether or not a jury is being demanded.

VIII. **Related Cases**. This section of the JS-44 is used to reference related pending cases if any. If there are related pending cases, insert the docket numbers and the corresponding judge names for such cases.

Date and Attorney Signature. Date and sign the civil cover sheet.

American LegalNet, Inc. | www.USCourtForms.com