Matthew C. Bernstein (Bar No. 199240)
MBernstein@perkinscoie.com
Perkins Coie LLP
11988 El Camino Real, Suite 200
San Diego, CA 92130
Telephone: (858) 720-5721
Facsimile: (858) 720-5799

Garret A. Leach, P.C. (*pro hac vice*)
garret.leach@kirkland.com
Maria A. Maras (*pro hac vice*)
maria.maras@kirkland.com
Kirkland & Ellis LLP
300 North LaSalle
Chicago, IL 60654
Telephone: (312) 862-2000
Facsimile: (312) 863-2200

Attorneys for Plaintiff
TREEFROG DEVELOPMENTS, INC.
D/B/A LIFEPROOF

UNITED STATES DISTRICT COURT

SOUTHERN DISTRICT OF CALIFORNIA

TREEFROG DEVELOPMENTS, INC. D/B/A LIFEPROOF, Plaintiff, vs. THE JOY FACTORY, INC., Defendant.	CASE NO. '13CV0159 DMS WMC **COMPLAINT FOR PATENT INFRINGEMENT** **JURY TRIAL DEMANDED**

Plaintiff Treefrog Developments, Inc. d/b/a LifeProof ("LifeProof") brings this Complaint against Defendant The Joy Factory, Inc. ("Joy Factory"), alleging as follows:

PARTIES

1. Plaintiff LifeProof is a Delaware corporation with a principal place of business at 15110 Avenue of Science, San Diego, California 92128.

2. LifeProof designs, manufactures, and markets protective cases for use in all environments, which provide functionality and interactivity with smartphones and tablet computers.

3. Upon information and belief, Defendant Joy Factory is a California corporation with a principal place of business at 14 Goodyear, Suite 115, Irvine, California 92618.

4. Joy Factory designs, engineers, manufactures, markets, and sells cases for mobile devices such as smartphones and tablet computers.

5. Joy Factory conducts business and sells its cases for mobile devices such as smartphones and tablet computers throughout the United States via various websites, including, but not limited to, www.thejoyfactory.com, www.bestbuy.com, and www.amazon.com.

JURISDICTION AND VENUE

6. This action arises under the patent laws of the United States, 35 U.S.C. § 1 *et seq.*, and seeks damages and injunctive relief pursuant to 35 U.S.C. §§ 271, 281, and 283–285.

7. This Court has subject matter jurisdiction over the action pursuant to 28 U.S.C. §§1331 and 1338(a) because this action arises under the Acts of Congress relating to patents.

8. This Court has personal jurisdiction over Joy Factory because, upon information and belief, Joy Factory has had, and continues to have, regular and systematic contacts with the State of California and with this judicial district by using or offering to sell products that infringe the patent at issue in this case, or by conducting other business within this judicial district. In addition, this Court has personal jurisdiction over Joy Factory because, upon information and belief, Joy Factory has used and/or offered for sale infringing products with the expectation that such infringing products would be used, offered for sale, and/or sold within the State of California and this judicial district.

9. Venue is proper in this judicial district pursuant to 28 U.S.C. §§ 1391 and/or 1400 because, upon information and belief, Joy Factory conducts substantial business directly and/or through third parties or agents in this judicial district by offering for sale infringing products, and/or by conducting other business in this judicial district. Furthermore, LifeProof is headquartered and has its principal place of business in this judicial district, sells competing products in this judicial district, and has been harmed by Joy Factory's conduct in this judicial district.

JOY FACTORY'S AXTION PRO CASE

10. The International Consumer Electronics Show ("CES") is a major technology-related trade show. The 2013 CES was held from January 8 to January 11, 2013 in the Las Vegas Convention Center, Las Vegas, Nevada.

11. Joy Factory was an exhibitor at the 2013 CES. The Joy Factory exhibit at the 2013 CES was located at booth 3402.

12. Joy Factory displayed and advertised its aXtion Pro case for the Apple iPhone 5 ("aXtion Pro") at the 2013 CES.

13. Joy Factory demonstrated its aXtion Pro and used it to house, receive and/or encase at least one Apple iPhone 5 smartphone at the 2013 CES.

14. An attendee at the 2013 CES could obtain information about Joy Factory's aXtion Pro, including its physical description, its retail price, and/or its expected shipping date.

15. An attendee at the 2013 CES could examine at least one Joy Factory aXtion Pro case.

16. An attendee at the 2013 CES could observe an aXtion Pro being used to house, receive and/or encase at least one Apple iPhone 5 smartphone.

17. On January 8, 2013, Joy Factory issued a press release entitled, "The Joy Factory Debuts aXtion Line of Rugged, Waterproof Cases for iPad and iPhone & Universal Tablet Mounts at CES 2013" ("aXtion Pro Press Release"). *See, e.g.*, http://online.wsj.com/article/PR-CO-20130108-907228.html?mod=crnews.

18. In its January 8, 2013 press release, Joy Factory stated:

> The Joy Factory is debuting the next generation of rugged specialty products and mounts at booth no. 3402 in the iLounge including: aXtion pro Rugged, Waterproof case for iPad/iPad mini & iPhone 5 -- Building on the company's success of the company's waterproof cases for iOs devices, The Joy Factory has incorporated advanced waterproof and shockproof technology to protect the iPad, iPad mini, and iPhone 5 in the most challenging environments. The case meets the highest qualification of IP68 waterproof standard, meaning that it can withstand continuous submersion in water. The durable case also meets the standard of military grade shockproof MIL-STD-810, helping to protect the iPad/iPhone 5 from accidental drops and guard against hazards in the harshest conditions for those that hit the slopes or work at hazardous construction sites.

See, e.g., http://online.wsj.com/article/PR-CO-20130108-907228.html?mod=crnews.

19. In its January 8, 2013 press release, Joy Factory stated that, "The aXtion Pro will be available in Q1-2013, starting at the MSRP of $149.95 for the iPad, $129.95 for iPad mini, and $79.95 for the iPhone 5." *See, e.g.*, http://online.wsj.com/article/PR-CO-20130108-907228.html?mod=crnews.

20. In its January 8, 2013 press release, Joy Factory stated that, "All products will be available for pre-order at www.thejoyfactory.com and through major online sites and retailers." *See, e.g.*, http://online.wsj.com/article/PR-CO-20130108-907228.html?mod=crnews.

21. On its website, Joy Factory describes the aXtion Pro case for the Apple iPhone 5, provides photographs of various angles of the exterior of that case, and identifies it as Model CWD101. *See, e.g.*, http://www.thejoyfactory.com/product/cwd101. On its website, Joy Factory states that the aXtion Pro is "Coming soon." *Id.*

22. Joy Factory has tweeted on multiple occasions regarding the aXtion Pro. *See* https://twitter.com/TheJoyFactory. For example, on January 10, 2013, Joy Factory sent the following tweet: "Congrats to Ralph McDade George Alexander Calvin Spencer Michael Price for winning our aXtion Pro iPhone 5 case shipping in February." *Id.*

23. Joy Factory promoted the aXtion Pro on its official Facebook page. *See* https://www.facebook.com/thejoyfactory?ref=stream. For example, on January 8, 2013, Joy Factory shared a link via MailChimp on its official Facebook page. *Id.;* http://us2.campaign-

archive1.com/?u=0e92814a672edc56f2be4048b&id=43a7f0a74a. That link led to an advertisement for the aXtion Pro, which included a photograph of the aXtion Pro and stated "Now available at thejoyfactory.com." *Id.*

COUNT I

24. Paragraphs 1–23 are incorporated into this count by reference.

25. United States Patent No. 8,342,325 (the "'325 Patent"), entitled "Housing For Receiving And Encasing An Object," was duly and legally issued on January 1, 2013. The '325 Patent was duly and legally assigned to LifeProof, and LifeProof owns and has full rights to sue and recover damages and other relief for infringement of the '325 Patent. A copy of the '325 Patent is attached hereto as Exhibit 1.

26. Joy Factory has infringed, and is still infringing, the '325 Patent by making, using, offering for sale, and/or selling infringing products, including but not limited to the Joy Factory aXtion Pro case for use with the Apple iPhone 5 smartphone, within the United States.

27. Joy Factory's infringement of the '325 Patent has been without permission, consent, authorization, or license of LifeProof.

28. Joy Factory's infringement of the '325 Patent has injured LifeProof, and LifeProof is entitled to recover damages adequate to compensate it for Joy Factory's infringement.

29. Joy Factory has caused LifeProof substantial damages and irreparable injury by its infringement of the '325 Patent, and LifeProof will continue to suffer damage and irreparable injury unless and until the infringement by Joy Factory is enjoined by the Court. LifeProof has no adequate remedy at law.

PRAYER FOR RELIEF

WHEREFORE, Plaintiff LifeProof respectfully requests that judgment be entered in favor of LifeProof and against Defendant Joy Factory and further prays that the Court grant the following relief to LifeProof:

A. A judgment that Joy Factory has infringed the '325 Patent;

B. Entry of a preliminary and a permanent injunction pursuant to 35 U.S.C. § 283 enjoining Joy Factory, as well as its officers, directors, servants, consultants, managers, employees, agents, attorneys, successors, assigns, affiliates, subsidiaries, and all persons in active concert or participation with any of them, from infringement of the '325 Patent, including but not limited to making, using, offering to sell, selling, or importing any products that infringe the '325 Patent;

C. An award of all damages adequate to compensate LifeProof for Joy Factory's infringement, such damages to be determined by a jury and, if necessary, an accounting of all damages;

D. An award of prejudgment and post-judgment interest to LifeProof pursuant to 35 U.S.C. § 284;

E. A declaration that this case is exceptional under 35 U.S.C. § 285 and an award of the reasonable attorneys' fees, costs, and expenses incurred by LifeProof in this action; and

F. Such other and further relief as the Court may deem just and proper.

JURY DEMAND

Plaintiff LifeProof hereby demands a trial by jury on all issues and claims so triable.

Dated: January 19, 2013

Respectfully submitted,

s/ Matthew C. Bernstein

Matthew C. Bernstein
MBernstein@perkinscoie.com
Perkins Coie LLP
11988 El Camino Real, Suite 200
San Diego, CA 92130
Telephone: (858) 720-5721
Facsimile: (858) 720-5799

Attorney for Plaintiff
TREEFROG DEVELOPMENTS, INC.
D/B/A LIFEPROOF

EXHIBIT 1

US008342325B2

(12) **United States Patent**
Rayner

(10) **Patent No.: US 8,342,325 B2**
(45) **Date of Patent: *Jan. 1, 2013**

(54) **HOUSING FOR RECEIVING AND ENCASING AN OBJECT**

(75) Inventor: **Gary Rayner**, San Diego, CA (US)

(73) Assignee: **Treefrog Developments, Inc**, San Diego, CA (US)

(*) Notice: Subject to any disclaimer, the term of this patent is extended or adjusted under 35 U.S.C. 154(b) by 0 days.

This patent is subject to a terminal disclaimer.

(21) Appl. No.: **13/272,156**

(22) Filed: **Oct. 12, 2011**

(65) **Prior Publication Data**

US 2012/0211382 A1 Aug. 23, 2012

Related U.S. Application Data

(60) Provisional application No. 61/392,361, filed on Oct. 12, 2010, provisional application No. 61/444,085, filed on Feb. 17, 2011, provisional application No. 61/471,058, filed on Apr. 1, 2011.

(51) **Int. Cl.**

B65D 85/00	(2006.01)
B65D 6/40	(2006.01)
G06F 1/16	(2006.01)
H04M 1/00	(2006.01)

(52) **U.S. Cl.** .. **206/320**; 206/305; 220/4.21; 361/679.02; 361/679.26; 361/679.56; 455/575.1

(58) **Field of Classification Search** 206/305, 206/320; 220/4.21–4.24; 361/679.1, 679.2, 361/679.3, 679.4, 679.26, 679.55, 679.56, 361/679.01, 679.02, 679.03; 422/575.1, 422/575.8; 455/575.1, 575.8

See application file for complete search history.

(56) **References Cited**

U.S. PATENT DOCUMENTS

3,023,885	A	3/1962	Kindseth
3,482,895	A	12/1969	Becklin
3,665,991	A	5/1972	Gillemot et al.
4,097,878	A	6/1978	Cramer
4,312,580	A	1/1982	Schwomma et al.

(Continued)

FOREIGN PATENT DOCUMENTS

EP	1018680	A2	7/2000

(Continued)

OTHER PUBLICATIONS

Results for Invalidity Search for Patent 6,995,976.

(Continued)

Primary Examiner — Bryon Gehman

(74) *Attorney, Agent, or Firm* — Mintz Levin Cohn Ferris Glovsky and Popeo PC

(57) **ABSTRACT**

This disclosure relates generally to an apparatus and/or system for housing a device. The apparatus includes a housing that is configured such that a device may be fitted within the housing and thereby be protected, such as from shocks and/or liquid. The housing may include top and bottom members that may be removably coupled together so as to form the housing. Each top and bottom member optionally includes front and back surfaces surrounded by a perimeter. The perimeter is defined by proximal and distal ends as well as opposing sides. The top and bottom members may include respective clasping mechanisms that extend along the perimeter of the top and bottom members. The clasping mechanisms are configured for coupling the top and bottom members with one another thereby sealing the housing, for instance, in a shock-proof and/or water tight seal.

20 Claims, 141 Drawing Sheets

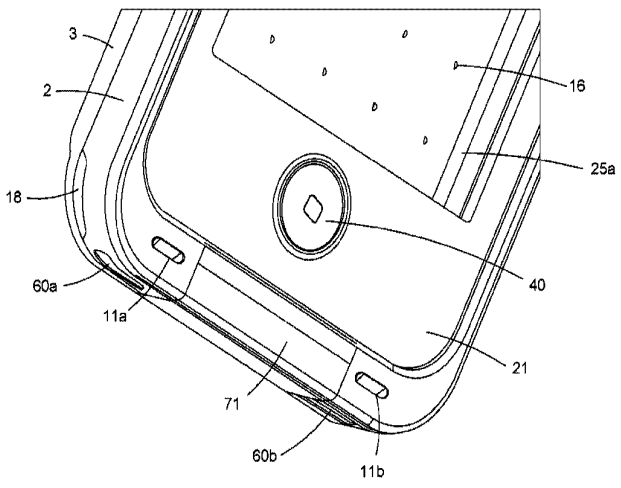

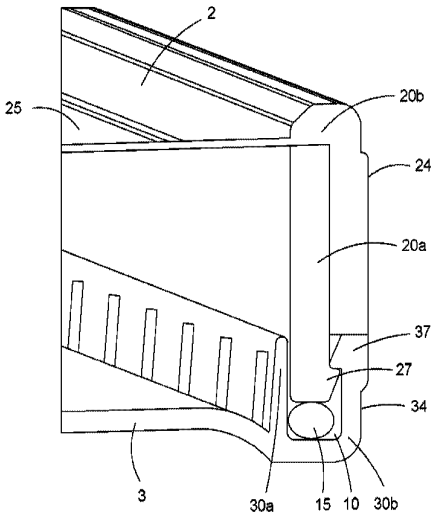

U.S. PATENT DOCUMENTS

4,375,323	A		3/1983	Inagaki et al.	
4,383,743	A		5/1983	Nozawa et al.	
4,418,830	A	*	12/1983	Dzung et al.	220/4.21
4,420,078	A		12/1983	Belt et al.	
4,546,874	A	*	10/1985	Kirchhan	220/4.22
4,584,718	A		4/1986	Fuller	
4,658,956	A		4/1987	Takeda et al.	
4,686,332	A		8/1987	Greanias et al.	
4,712,657	A	*	12/1987	Myers et al.	220/4.21
4,733,776	A		3/1988	Ward	
4,762,227	A		8/1988	Patterson	
4,803,504	A		2/1989	Maeno et al.	
4,836,256	A		6/1989	Meliconi	
4,942,514	A		7/1990	Miyagaki et al.	
4,963,902	A		10/1990	Fukahori	
4,977,483	A		12/1990	Perretta	
4,994,829	A		2/1991	Tsukamoto	
5,002,184	A		3/1991	Lloyd	
D316,932	S		5/1991	Escher, Jr.	
5,025,921	A		6/1991	Gasparaitis et al.	
D322,165	S		12/1991	Lloyd	
5,087,934	A		2/1992	Johnson	
5,092,458	A		3/1992	Yokoyama	
5,092,459	A		3/1992	Uljanic et al.	
5,177,515	A		1/1993	Tsukamoto	
5,231,381	A		7/1993	Duwaer	
5,239,323	A		8/1993	Johnson	
5,239,324	A		8/1993	Ohmura et al.	
5,285,894	A		2/1994	Kamata et al.	
5,305,032	A		4/1994	Arai	
5,368,159	A		11/1994	Doria	
5,383,091	A		1/1995	Snell	
5,388,691	A		2/1995	White	
5,388,692	A		2/1995	Withrow et al.	
5,541,813	A		7/1996	Satoh et al.	
RE35,318	E		8/1996	Warman	
5,548,306	A		8/1996	Yates, IV et al.	
5,583,742	A		12/1996	Noda et al.	
5,584,054	A		12/1996	Tyneski et al.	
5,590,760	A		1/1997	Astarb	
D378,634	S		4/1997	LaPere	
5,669,004	A		9/1997	Sellers	
5,707,757	A		1/1998	Lee	
5,713,048	A		1/1998	Hayakawa	
5,713,466	A		2/1998	Tajima	
5,850,915	A		12/1998	Tajima	
5,907,721	A		5/1999	Schelling et al.	
5,946,501	A		8/1999	Hayakawa	
5,956,291	A		9/1999	Nehemiah et al.	
5,982,520	A		11/1999	Weiser et al.	
5,990,874	A		11/1999	Tsumura et al.	
6,068,119	A		5/2000	Derr et al.	
6,092,707	A		7/2000	Bowes, Jr.	
6,094,785	A		8/2000	Montgomery et al.	
6,128,441	A		10/2000	Kamata et al.	
6,132,367	A		10/2000	Adair	
6,201,867	B1		3/2001	Koike	
D447,634	S		9/2001	Snider	
6,313,982	B1		11/2001	Hino	
6,317,313	B1		11/2001	Mosgrove et al.	
6,349,824	B1		2/2002	Yamada	
6,415,138	B2		7/2002	Sirola et al.	
6,456,487	B1		9/2002	Hetterick	
6,519,141	B2		2/2003	Tseng et al.	
6,536,589	B2		3/2003	Chang	
6,574,434	B2		6/2003	Matsuoto et al.	
6,594,472	B1		7/2003	Curtis et al.	
6,597,865	B1		7/2003	Negishi et al.	
6,614,423	B1		9/2003	Wong et al.	
6,616,111	B1		9/2003	White	
6,625,394	B2		9/2003	Smith et al.	
6,634,494	B1		10/2003	Derr et al.	
6,636,697	B2		10/2003	Smith et al.	
6,659,274	B2		12/2003	Enners	
6,665,174	B1		12/2003	Derr et al.	
6,760,570	B1		7/2004	Higdon, Jr.	
6,778,388	B1		8/2004	Minelli	
6,785,566	B1		8/2004	Irizarry	
6,822,640	B2		11/2004	Derocher	
6,914,774	B1		7/2005	Albertini et al.	
6,955,293	B1		10/2005	Katsanevas	
6,975,888	B2		12/2005	Buesseler et al.	
6,980,777	B2		12/2005	Shepherd et al.	
6,995,976	B2		2/2006	Richardson	
7,046,230	B2		5/2006	Zadesky et al.	
7,050,841	B1		5/2006	Onda	
7,082,264	B2		7/2006	Watanabe et al.	
7,106,959	B2		9/2006	Sato	
7,158,376	B2		1/2007	Richardson et al.	
7,180,735	B2		2/2007	Thomas et al.	
7,194,291	B2		3/2007	Peng	
7,255,228	B2	*	8/2007	Kim	206/320
7,312,984	B2		12/2007	Richardson et al.	
7,352,961	B2		4/2008	Watanabe et al.	
7,365,281	B2		4/2008	Yamaguchi et al.	
7,369,881	B2		5/2008	Tsujimoto	
7,609,512	B2		10/2009	Richardson et al.	
D605,850	S		12/2009	Richardson et al.	
7,789,228	B2		9/2010	Zenzai	
7,801,425	B2		9/2010	Fantone et al.	
7,889,489	B2		2/2011	Richardson et al.	
7,933,122	B2	*	4/2011	Richardson et al.	361/679.55
7,941,196	B2	*	5/2011	Kawasaki et al.	455/575.8
D644,636	S		9/2011	Richardson et al.	
8,164,899	B2	*	4/2012	Yamaguchi et al.	361/679.55
8,191,706	B1		6/2012	Liu	
8,204,561	B2		6/2012	Mongan et al.	
2001/0040109	A1		11/2001	Yaski et al.	
2002/0003584	A1		1/2002	Kossin	
2002/0079244	A1		6/2002	Kwong	
2002/0085709	A1		7/2002	Hsu	
2002/0090212	A1		7/2002	Shimamura et al.	
2002/0136557	A1		9/2002	Shimamura	
2002/0137475	A1		9/2002	Shou et al.	
2002/0175901	A1		11/2002	Gettemy	
2002/0193136	A1		12/2002	Halkosaari et al.	
2002/0195910	A1		12/2002	Hus et al.	
2003/0080947	A1		5/2003	Genest et al.	
2003/0111366	A1		6/2003	Enners	
2003/0118332	A1		6/2003	Smith et al.	
2003/0118334	A1		6/2003	Smith et al.	
2003/0128397	A1		7/2003	Smith et al.	
2003/0223577	A1		12/2003	Ono	
2004/0014506	A1		1/2004	Kemppinen	
2004/0089570	A1		5/2004	Chien et al.	
2004/0203502	A1		10/2004	Dietrich et al.	
2005/0052425	A1		3/2005	Zadesky et al.	
2005/0094024	A1		5/2005	Sato	
2005/0110768	A1		5/2005	Marriott et al.	
2005/0174727	A1		8/2005	Thomas et al.	
2005/0181843	A1		8/2005	Tsujimoto	
2005/0247584	A1		11/2005	Lu	
2006/0008261	A1		1/2006	Watanabe et al.	
2006/0110146	A1		5/2006	Ariga	
2007/0040931	A1		2/2007	Nishizawa	
2007/0071423	A1		3/2007	Fantone et al.	
2007/0074473	A1		4/2007	Yamaguchi et al.	
2007/0115387	A1		5/2007	Ho	
2007/0261978	A1		11/2007	Sanderson	
2007/0280053	A1		12/2007	Polany et al.	
2007/0297149	A1		12/2007	Richardson	
2008/0081679	A1		4/2008	Kawasaki et al.	
2008/0164267	A1		7/2008	Huber	
2009/0017884	A1		1/2009	Rotschild	
2009/0087655	A1		4/2009	Yamada et al.	
2009/0117957	A1		5/2009	Araki et al.	
2009/0167545	A1		7/2009	Osaka	
2009/0211775	A1		8/2009	Yamaguchi et al.	
2010/0181108	A1		7/2010	Hata et al.	
2010/0311475	A1		12/2010	Takatsuka et al.	
2011/0024315	A1	*	2/2011	Kim	206/320
2012/0018325	A1		1/2012	Kim	
2012/0031914	A1		2/2012	Liu	
2012/0043235	A1	*	2/2012	Klement	206/320
2012/0099261	A1	*	4/2012	Reber	361/679.3
2012/0099262	A1	*	4/2012	Reber et al.	361/679.4
2012/0099265	A1	*	4/2012	Reber	361/679.26

2012/0099266	A1*	4/2012	Reber et al.	361/679.26
2012/0103844	A1	5/2012	Piedra et al.	
2012/0168336	A1	7/2012	Schmidt et al.	

FOREIGN PATENT DOCUMENTS

JP	08-288990	A	11/1996
JP	2000-341383	A	12/2000
JP	2001-046132	A	2/2001
WO	WO-94/00037	A1	1/1994
WO	WO-99/41958	A1	8/1999
WO	WO-00/51315	A1	8/2000
WO	WO-02/11161	A2	2/2002
WO	WO-2012074151	A1	6/2012

OTHER PUBLICATIONS

PCT International Search Report and Written Opinion for corresponding PCT application No. PCT/US2011/056040.

BodyGloveMobile—Apple iPhone 4 & 4S Zero 360 Case-Clear-Flat Back (no clip) [Retrieved from http://bodyglovemobile.com/product/apple-iphone-4-amp-4s-zero-360deg-case-clear-flat- back-no-clip,338,63.htm. Dated Apr. 9, 2012].

Casemate Chrome with Mirror Screen Protector for iPhone 4/4S Case-Mate [Retrieved from http://www.case-mate.com/iPhone-4-Cases/Case-Mate-iPhone-4-4S-Chrome-with-Mirror- Screen-Protector.asp. Dated Apr. 9, 2012].

Hard Candy Cases—Bubble 360 Case for the new iPAD [Retrieved from http://www.hardcandycases.com/bubble-360-case--for-new-ipad.html. Dated Apr. 9, 2012].

Eaglecell, Inc.—Eaglecell Phone Accessories—iPhone 4(AT&T/ Verizon)/ 4S(AT&T/Verizon/Sprint) [Retrieved from http://www.eaglecell.com/Ecommerce/general/BrowsrCategory.aspx?C . . . Dated Apr. 9, 2012].

Gadgetmac—CaseMate Phantom Case for iPhone 4/S Review [Retrieved from http://www.gadgetmac.com/reviews/case-mate-phantom-case-for-iphon . . . Dated Apr. 9, 2012].

Griffin cases & covers for iPhone 4 and iPhone 4s [Retrieved from http://www.griffintechnology.com/iphone/cases. Dated Apr. 9, 2012].

OtterBox Commuter Series Cases OtterBox.com [Retrieved from http://www.otterbox.com/commuter-series,default,pg.html. Dated Apr. 9, 2012].

TakTik—iPhone Case [Retrieved from http://articlesdownload.com/2012/08/16taktik-premiumprotection-system . . . Dated Apr. 9, 2012].

* cited by examiner

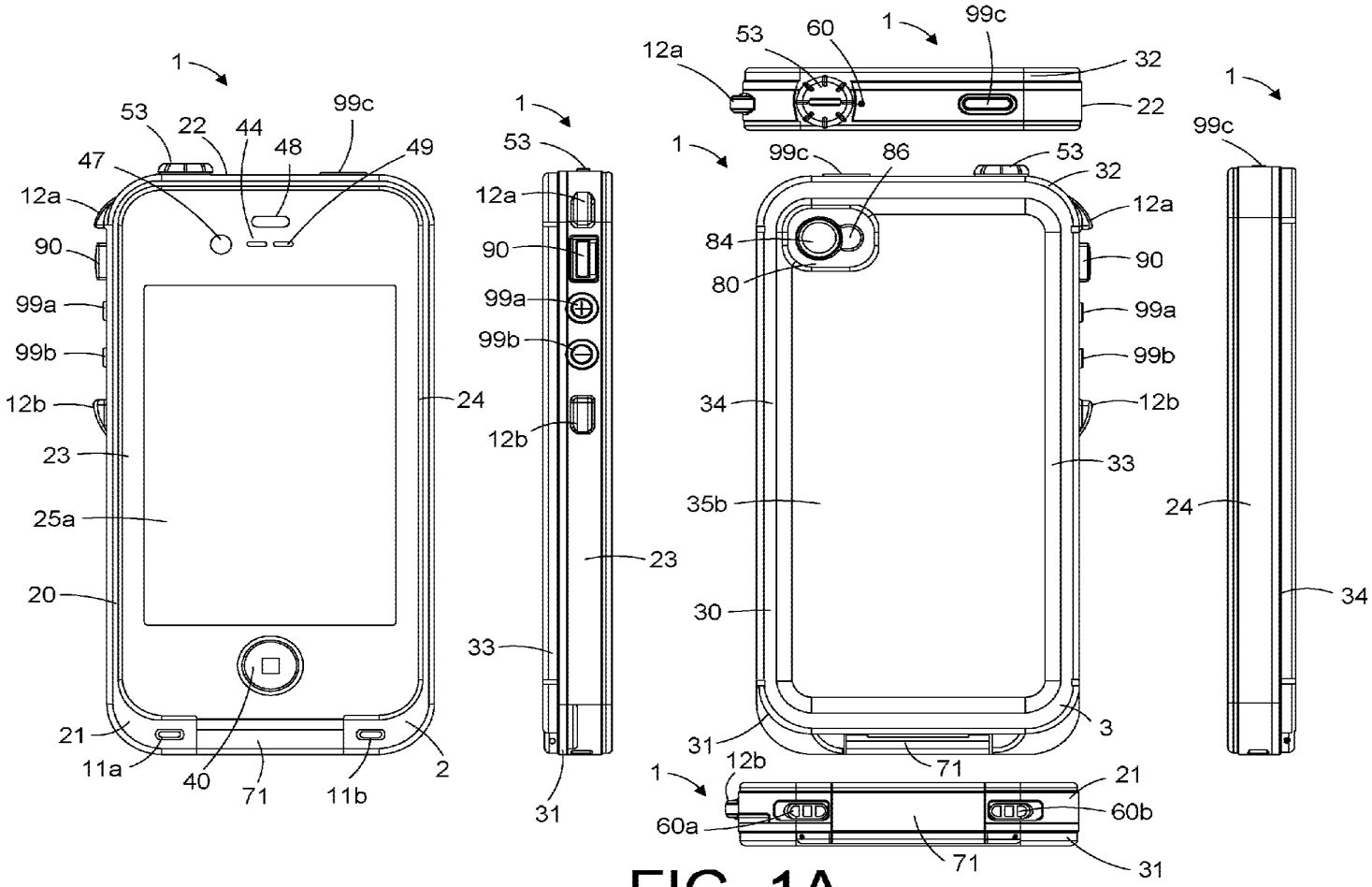
1
53
22
44
48
99c
49
47
12a
90
99a
99b
12b
23
25a
20
21
11a
40
71
11b
2
24
1
53
12a
90
99a
99b
12b
23
33
31
1
12a
53
60
1
99c
32
22
1
99c
86
53
32
12a
84
80
90
99a
99b
12b
34
33
35b
30
31
3
71
1
12b
21
60a
60b
71
31
1
99c
24
34

FIG. 1A

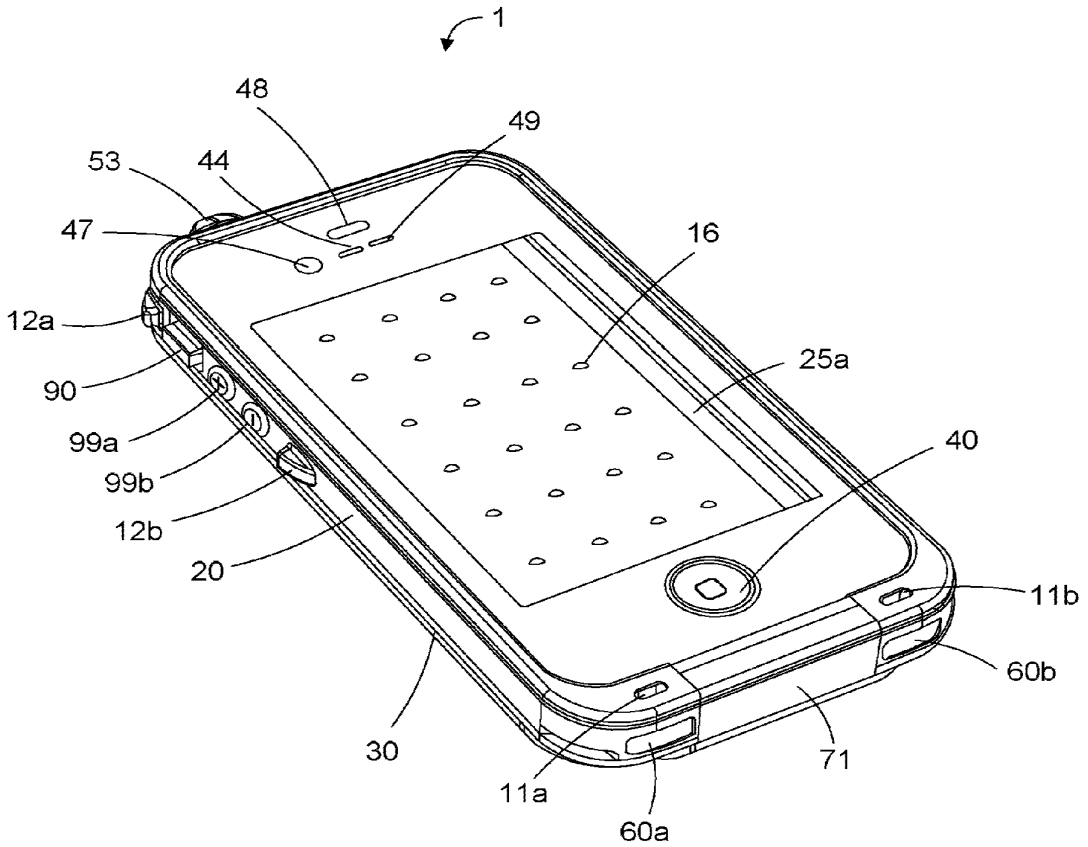
1
48
49
53
44
47
16
12a
25a
90
40
99a
99b
12b
11b
20
60b
30
71
11a
60a

FIG. 1B

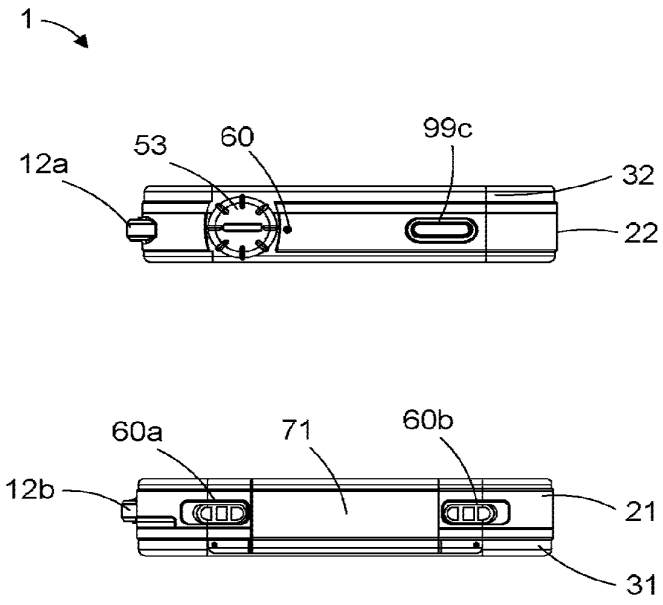

FIG. 1C

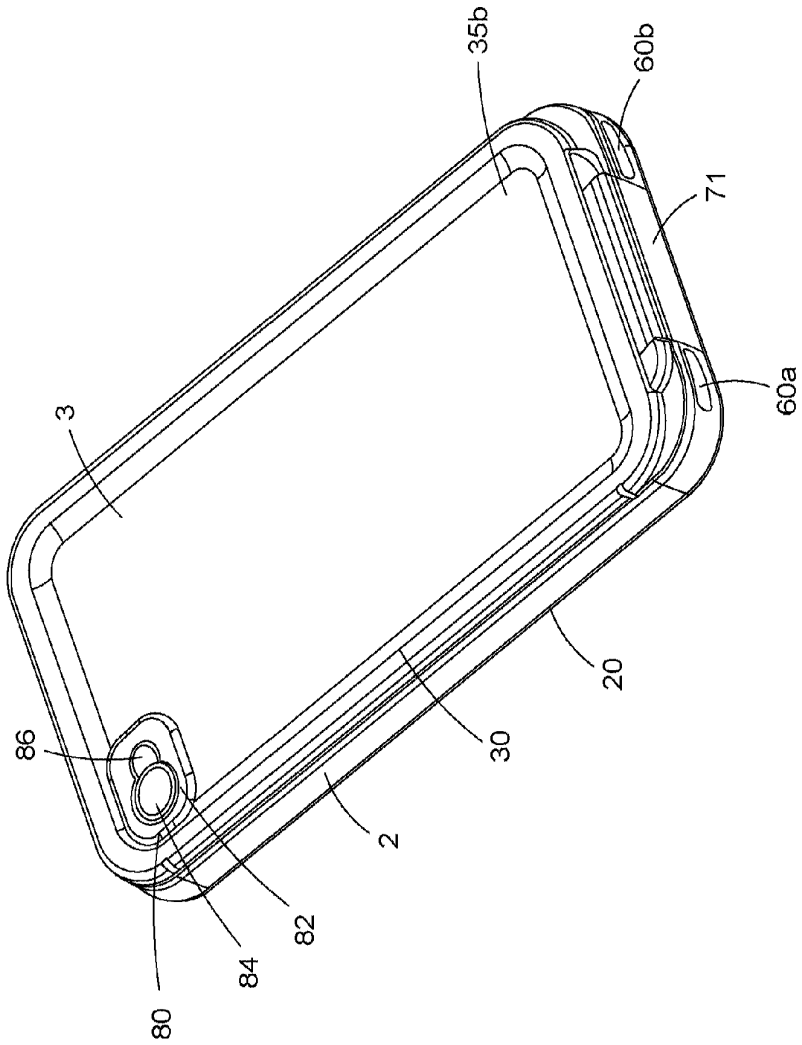

FIG. 1D

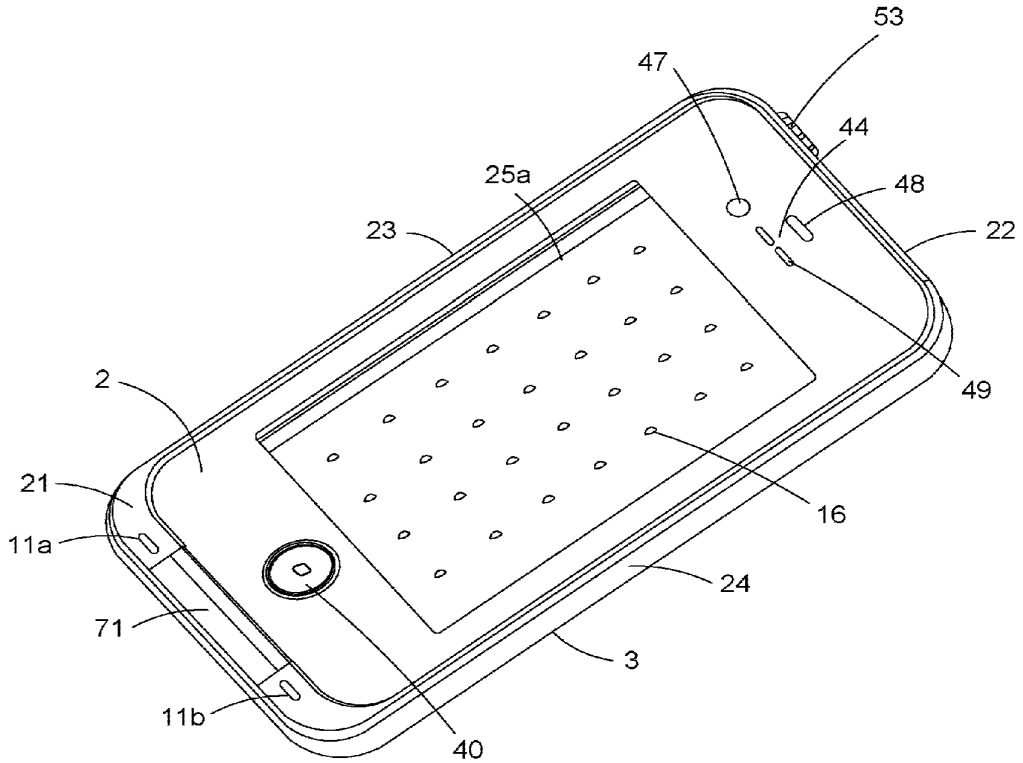

FIG. 2A

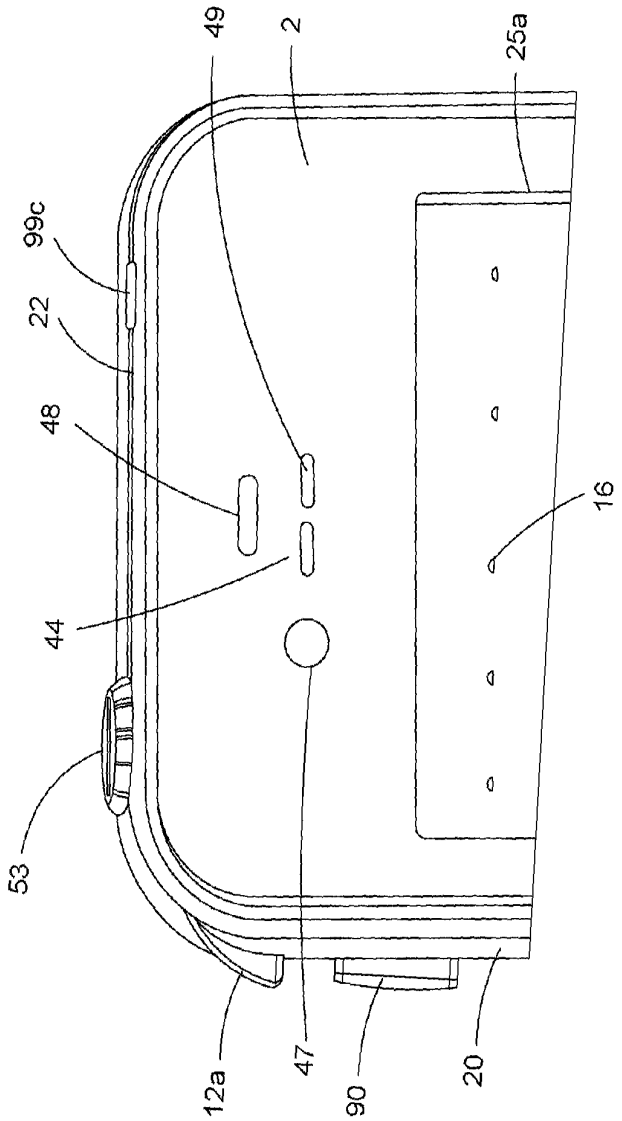

FIG. 2B

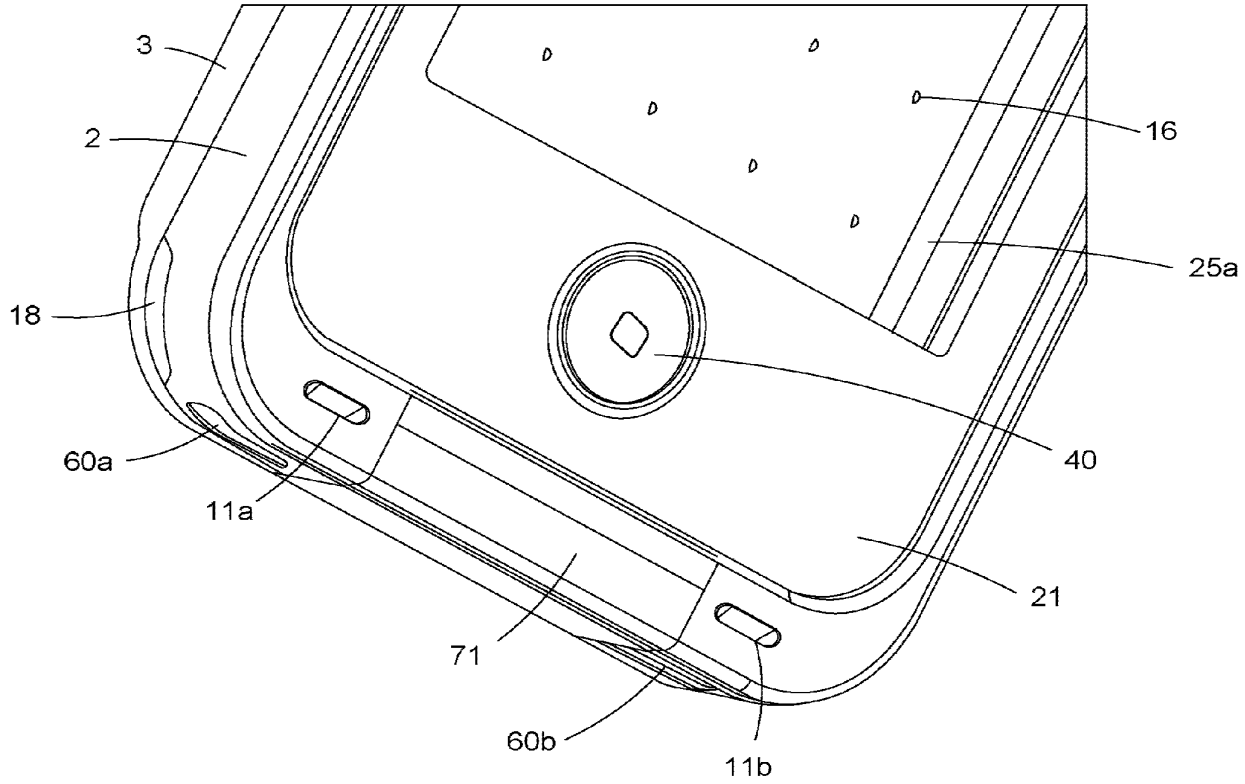

FIG. 2C

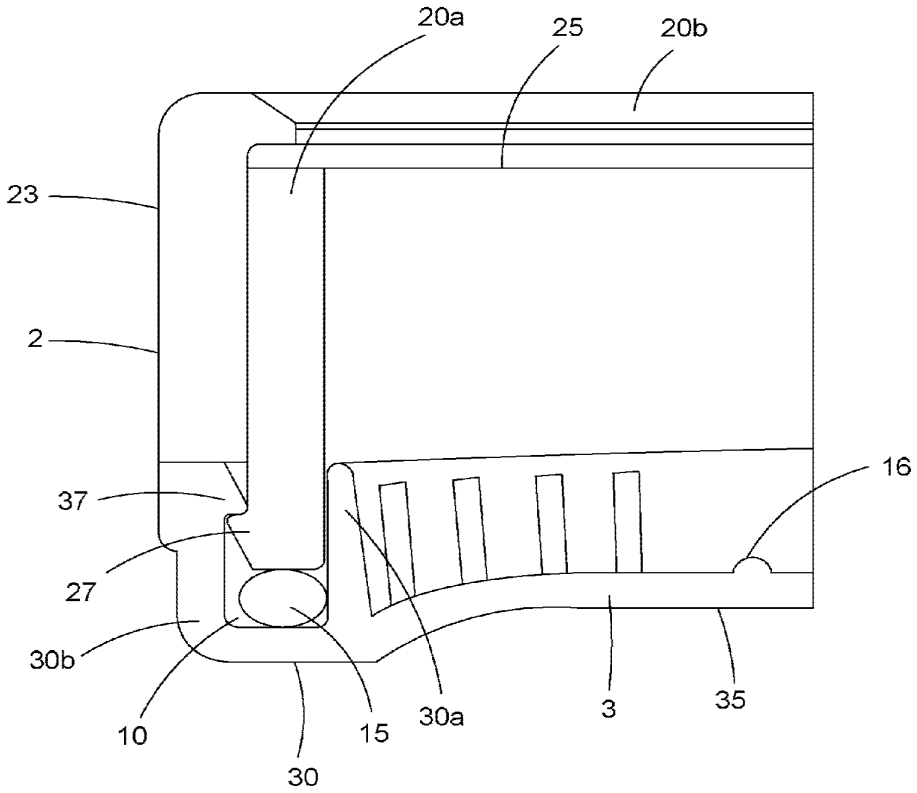

FIG. 3A

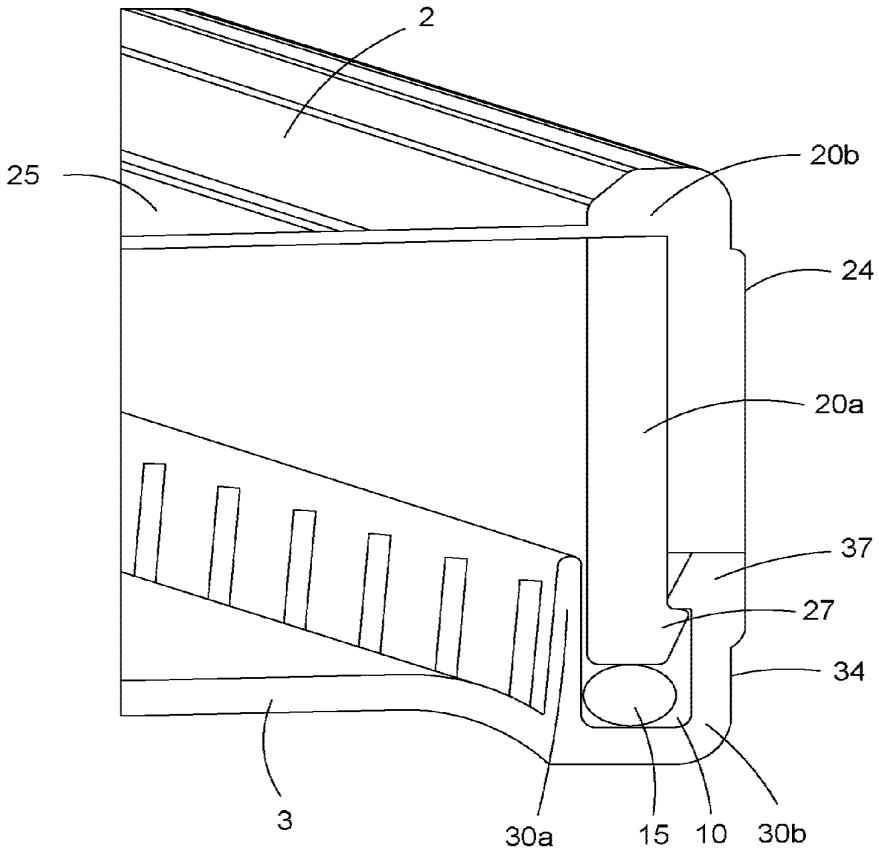

FIG. 3B

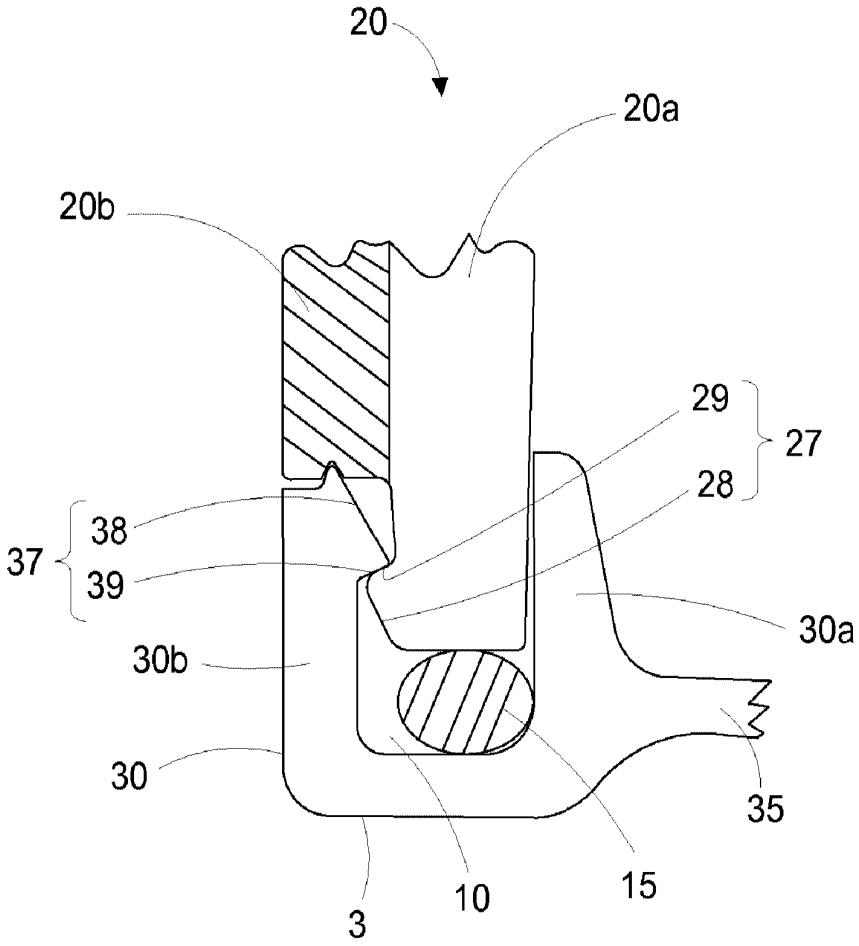

FIG. 3C

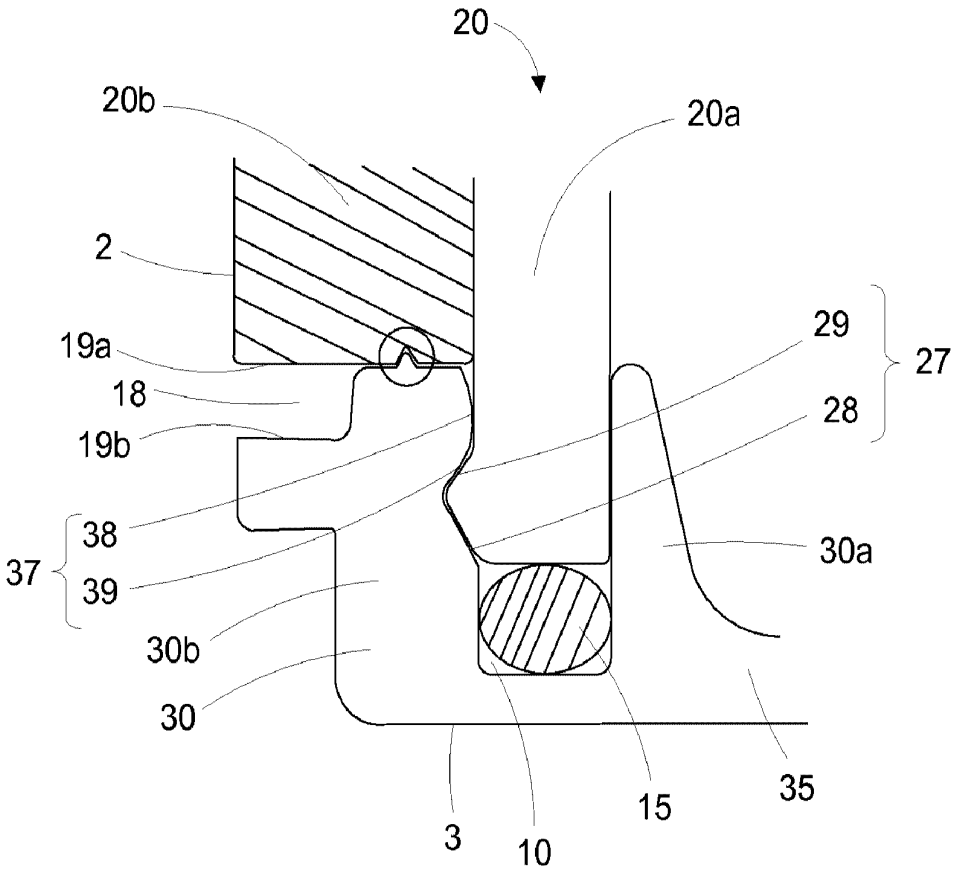

FIG. 3D

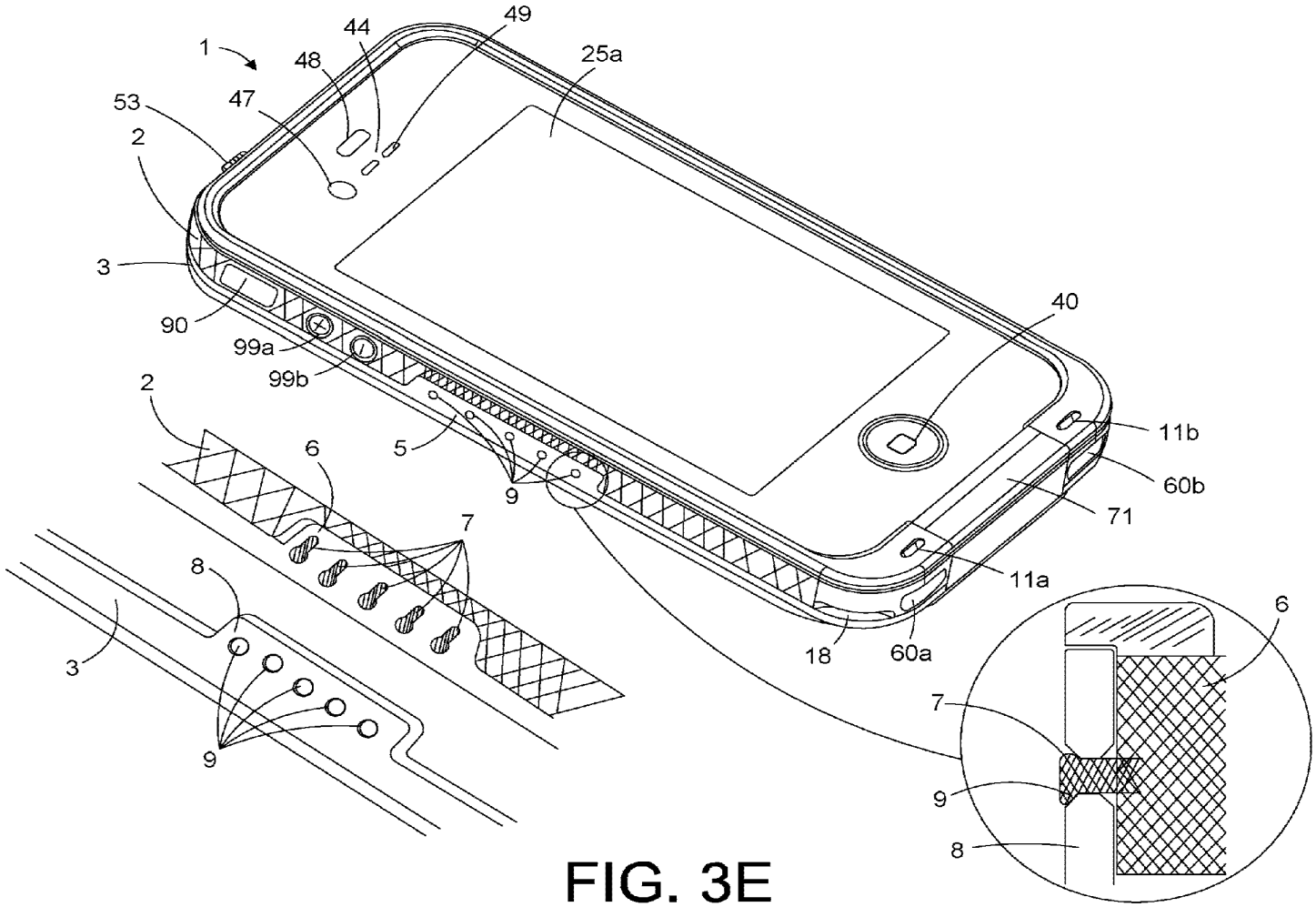
1
44
49
48
25a
53
47
2
3
90
99a
99b
40
11b
60b
71
11a
18
60a
2
6
5
9
7
8
3
9
6
7
9
8

FIG. 3E

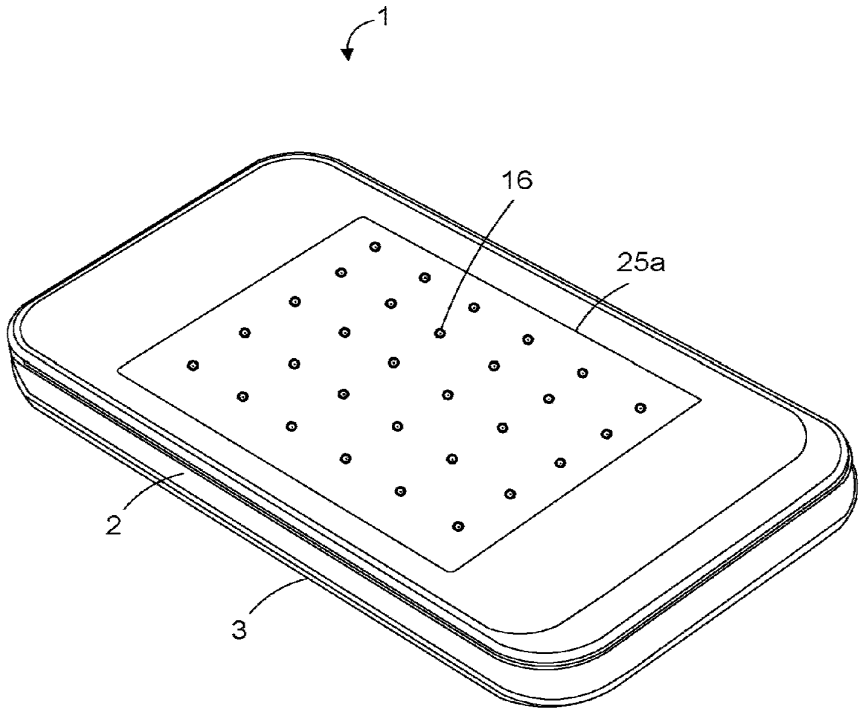

FIG. 3F

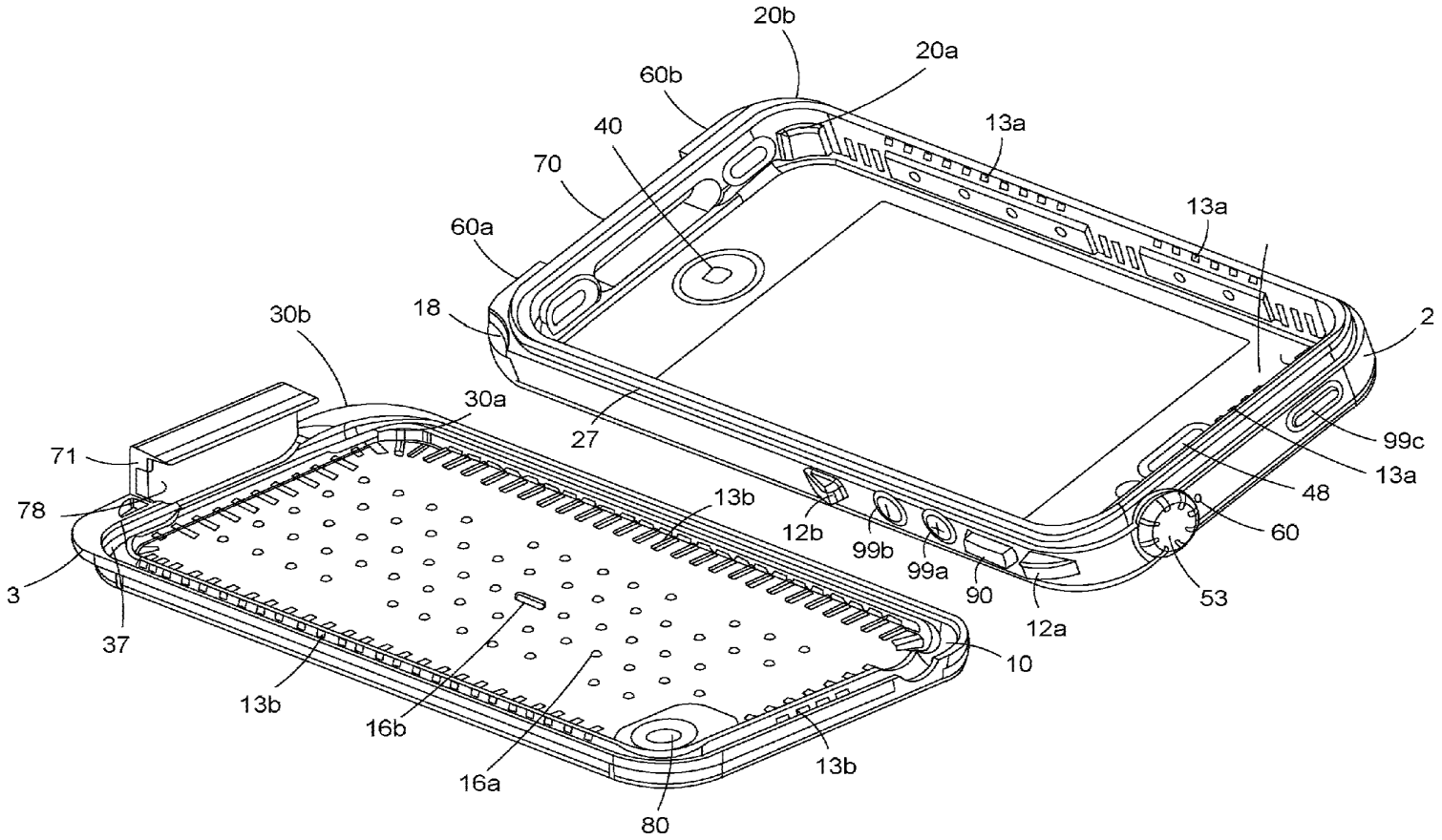
20b
20a
60b
40
13a
70
13a
60a
18
30b
2
30a
27
99c
71
13a
48
78
13b
12b
60
99b
99a
3
90
53
37
12a
10
13b
16b
13b
16a
80

FIG. 3G

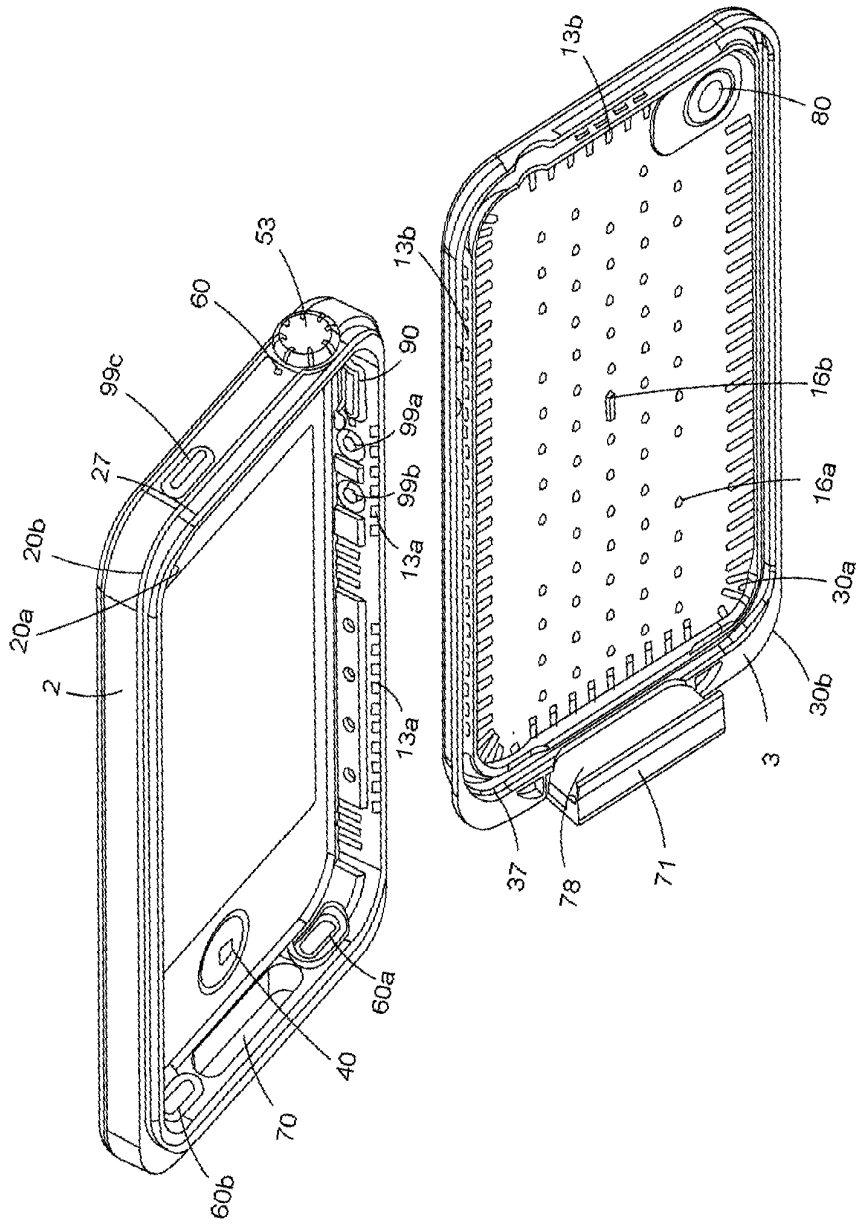
13b
80
53
60
13b
90
99c
99a
16b
27
99b
16a
20b
13a
30a
20a
2
13a
30b
3
37
78
71
60a
40
70
60b

FIG. 3H

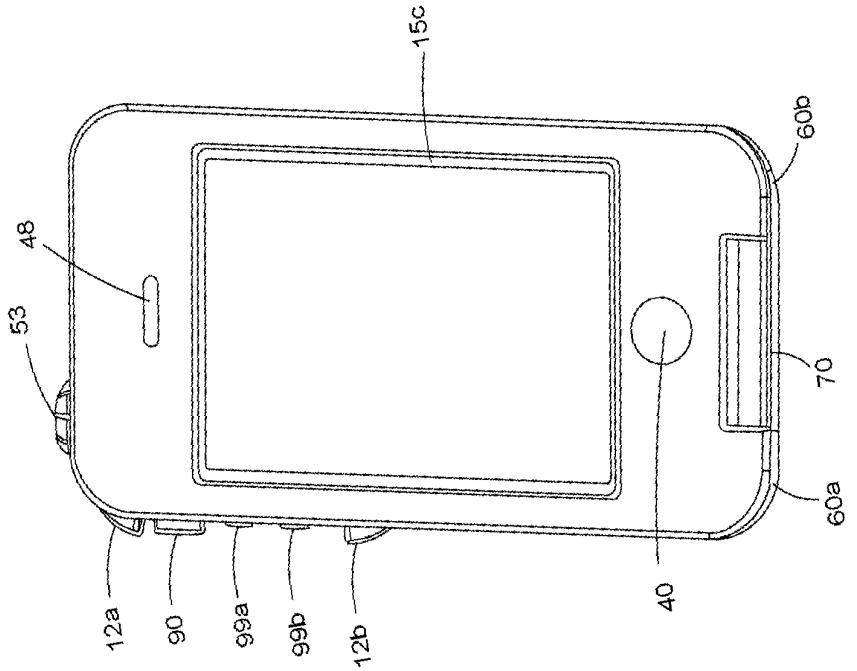

FIG. 3I

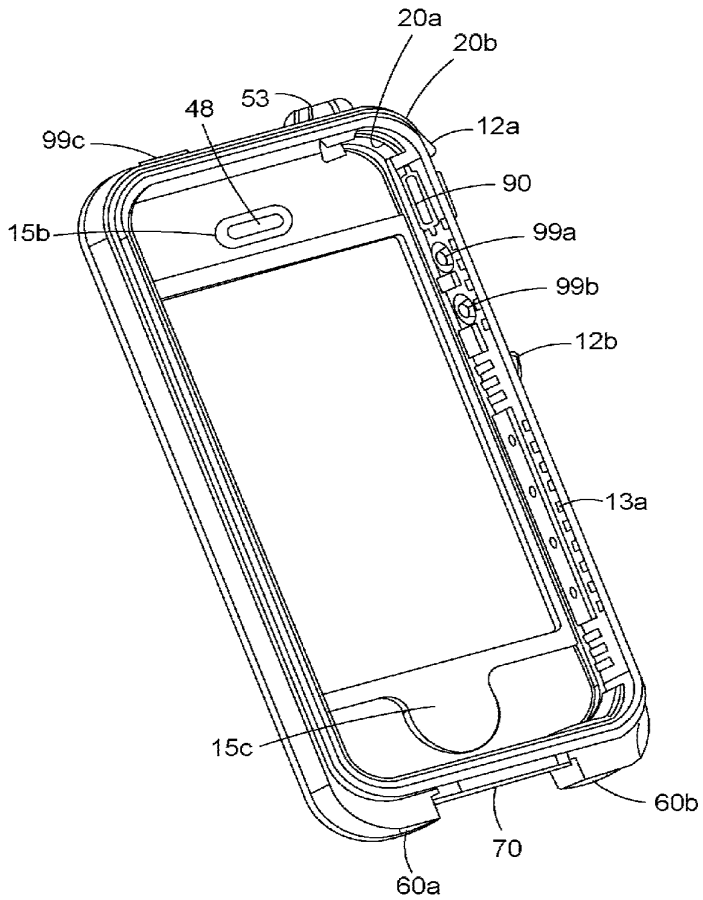

FIG. 3J

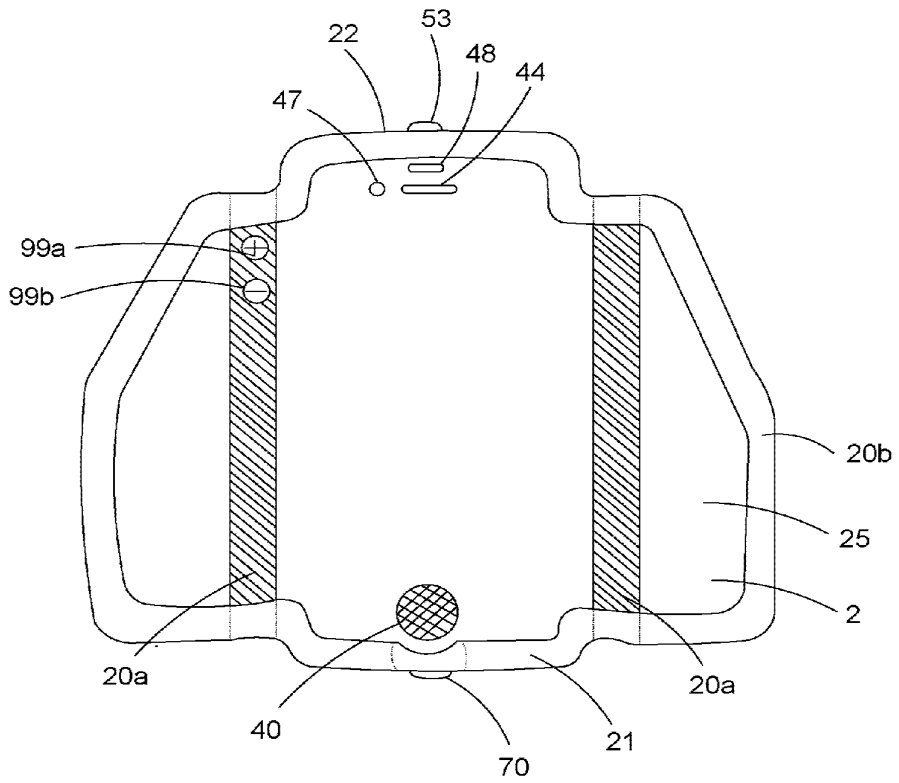

FIG. 3K

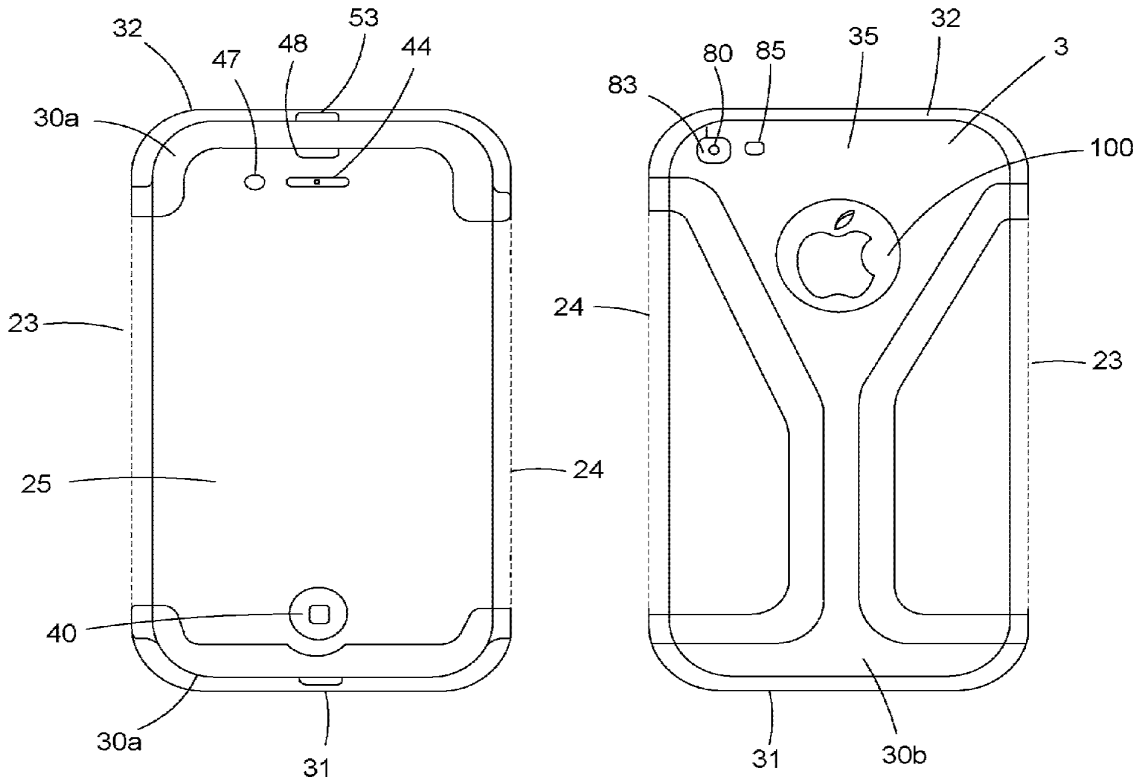

FIG. 3L

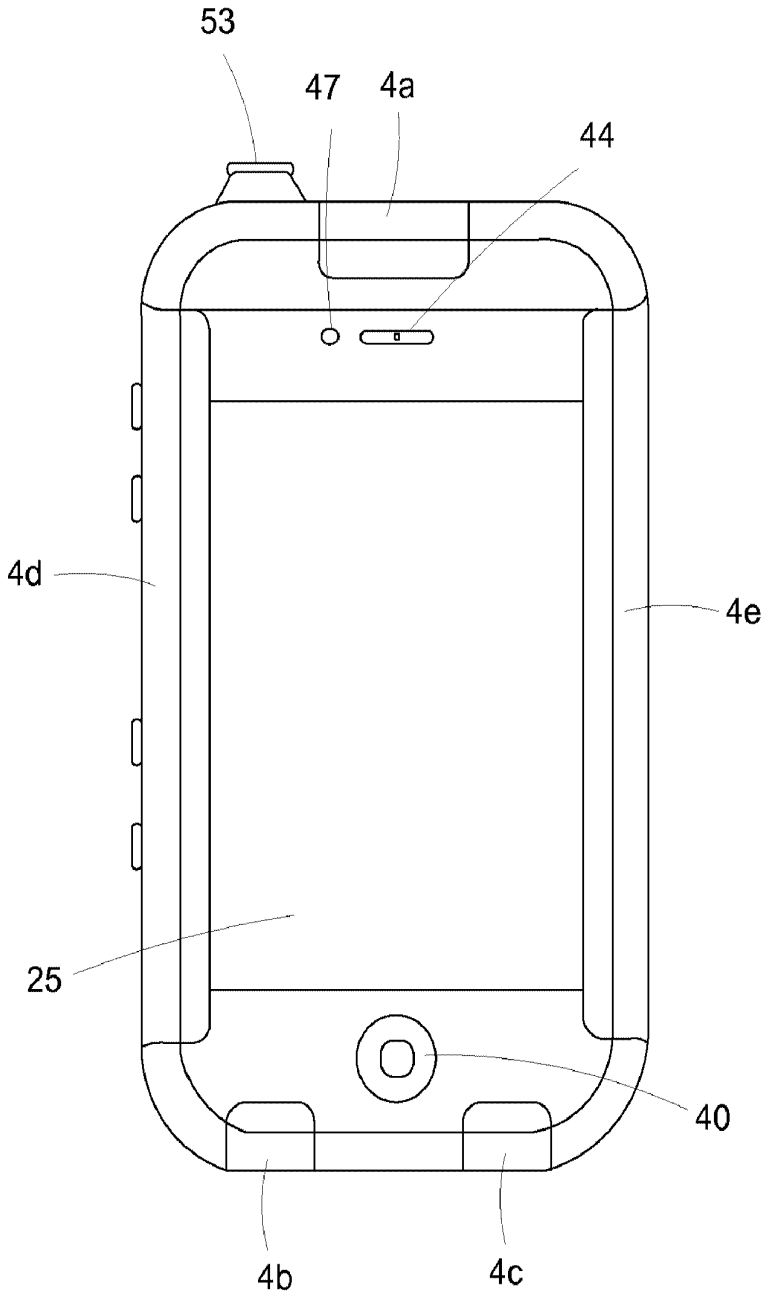

FIG. 3M

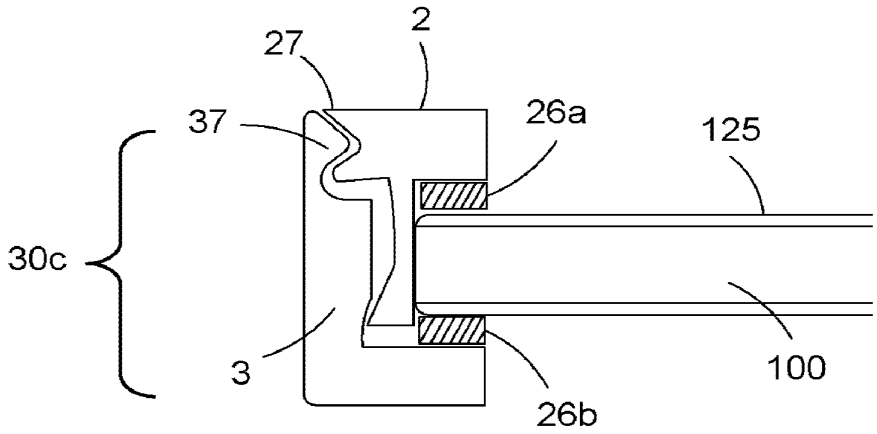

FIG. 4A

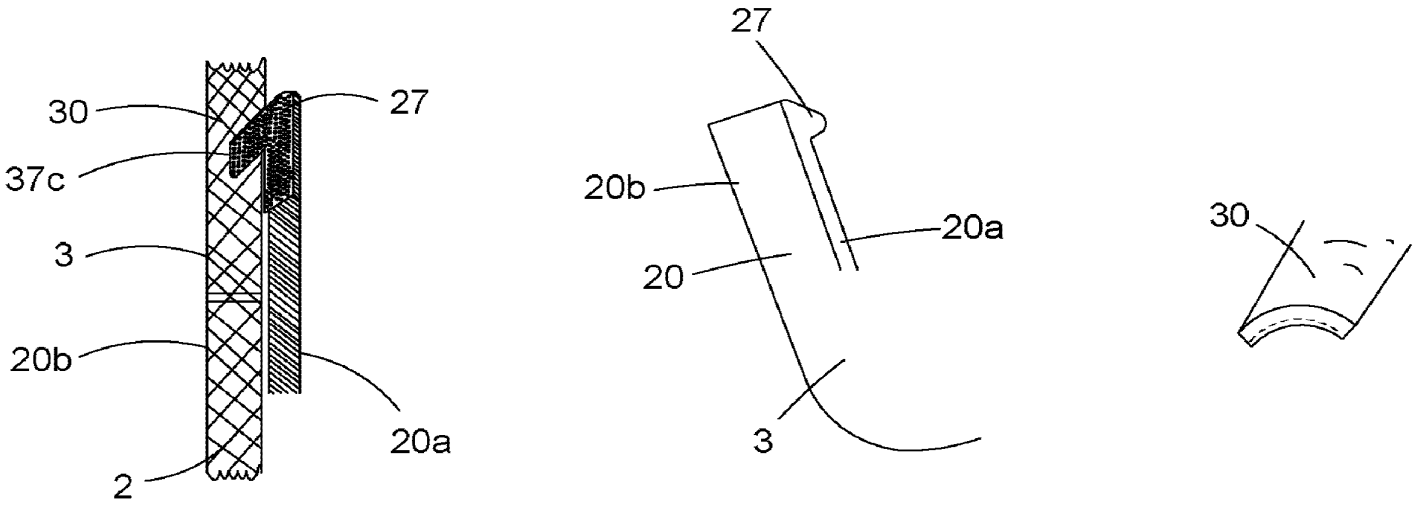

FIG. 4B

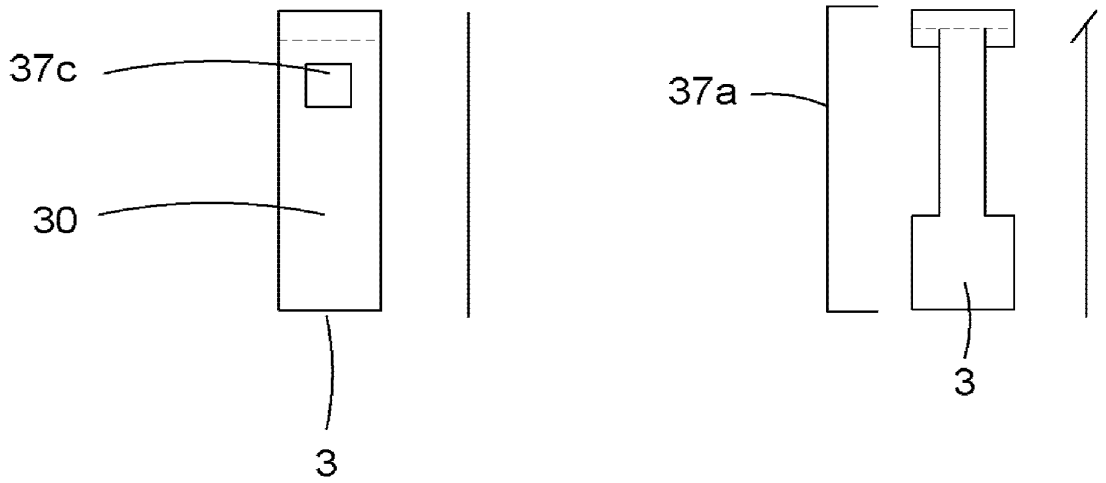

FIG. 4C

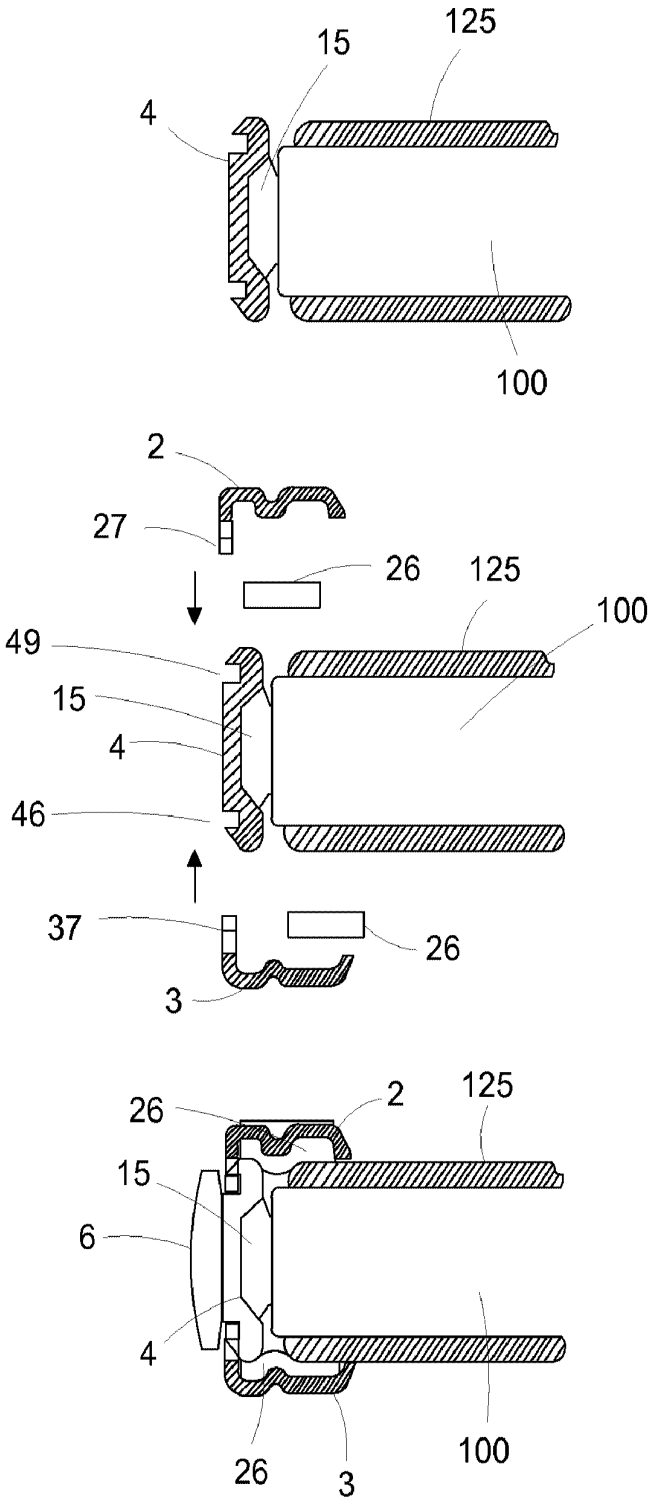

FIG. 4D

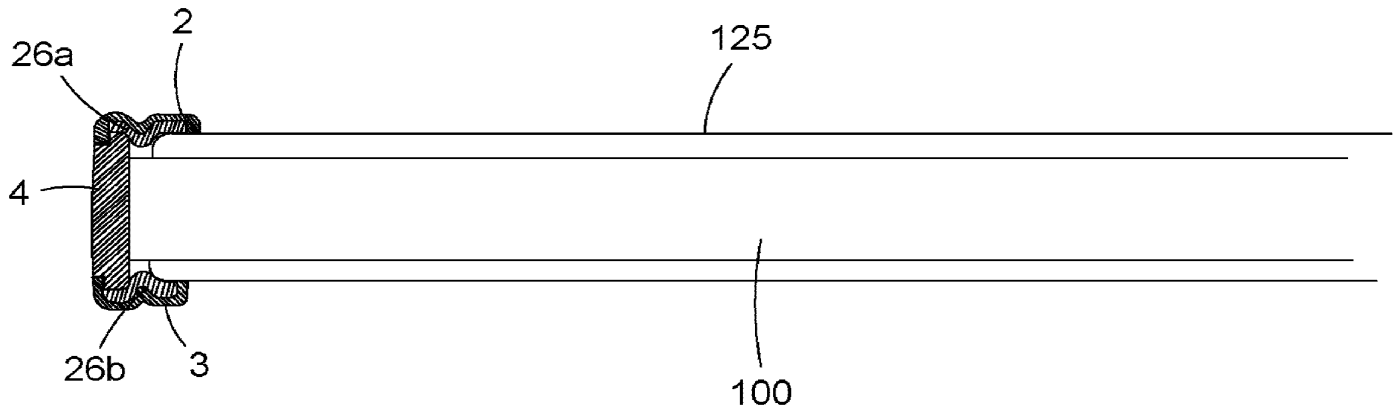

FIG. 4E

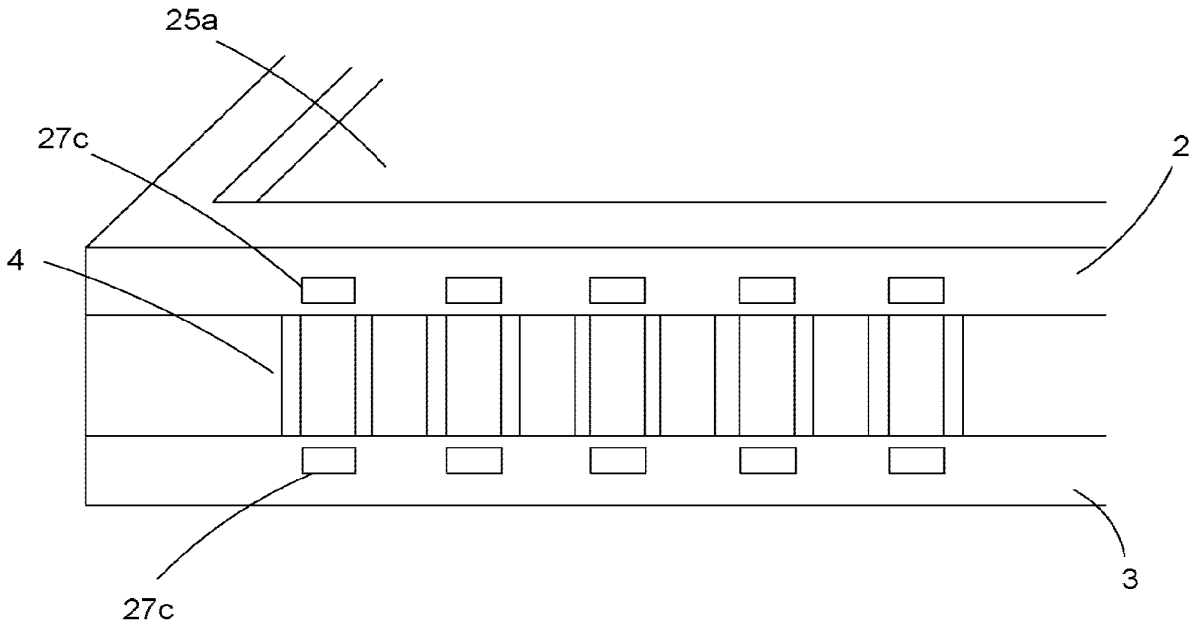

FIG. 4F

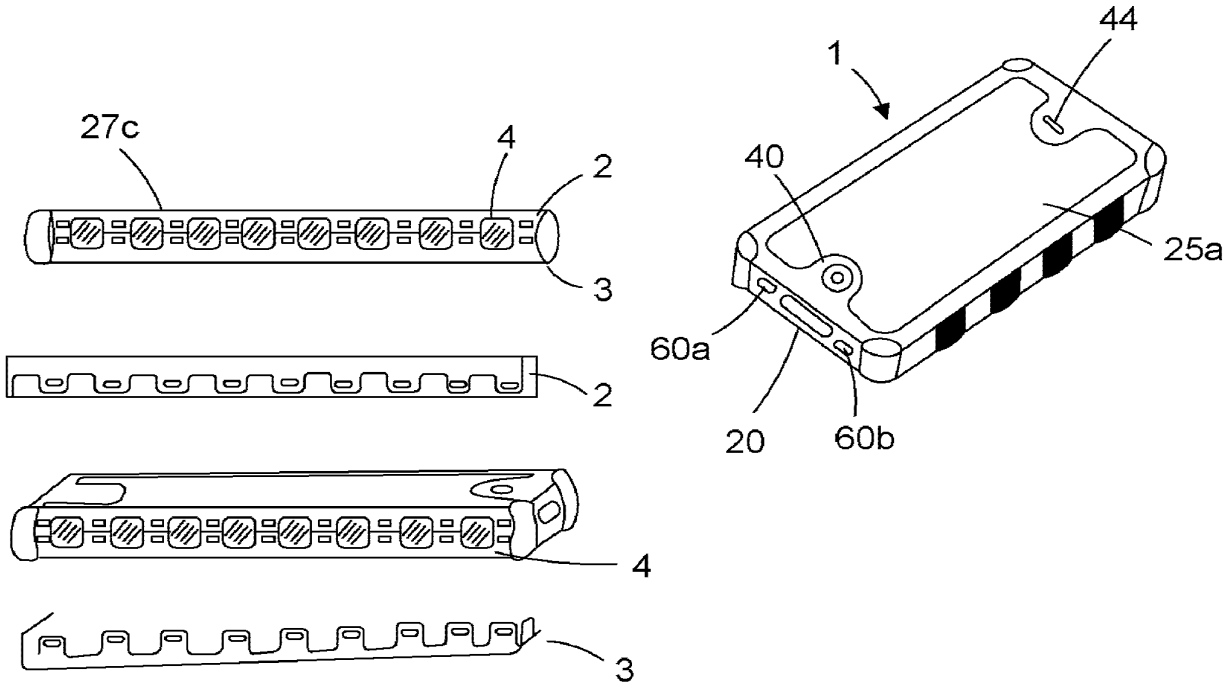

FIG. 4G

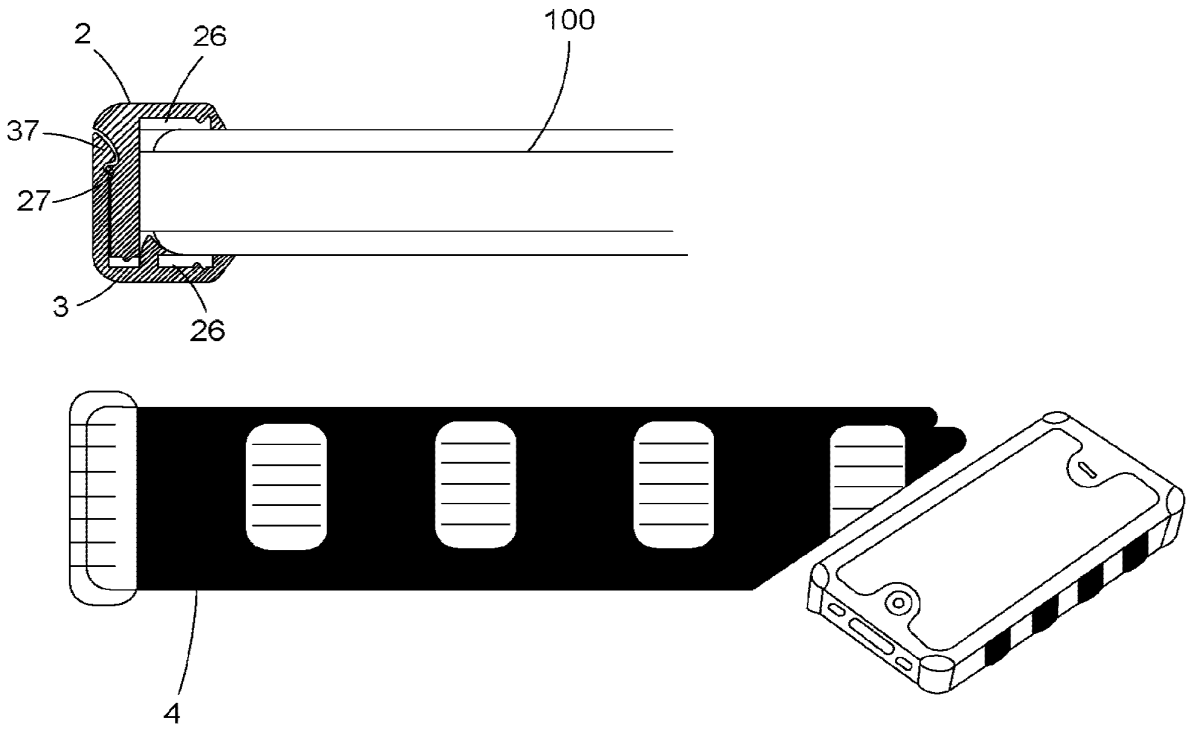

FIG. 4H

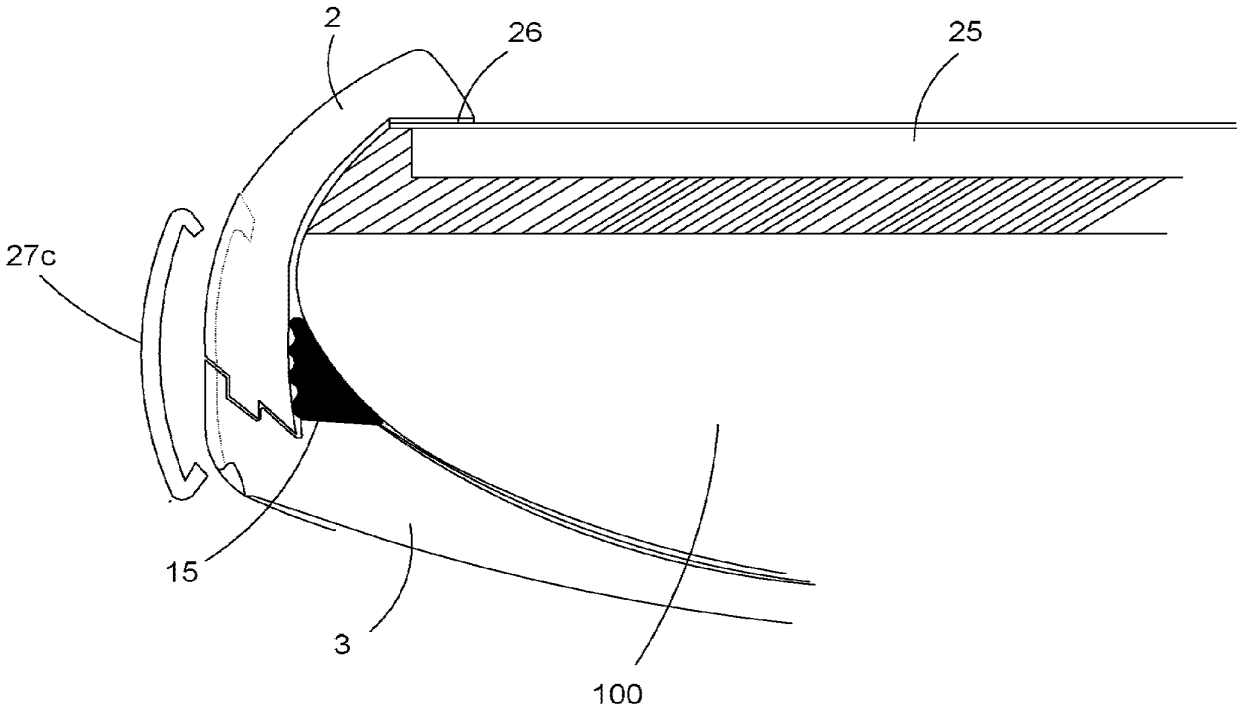

FIG. 4I

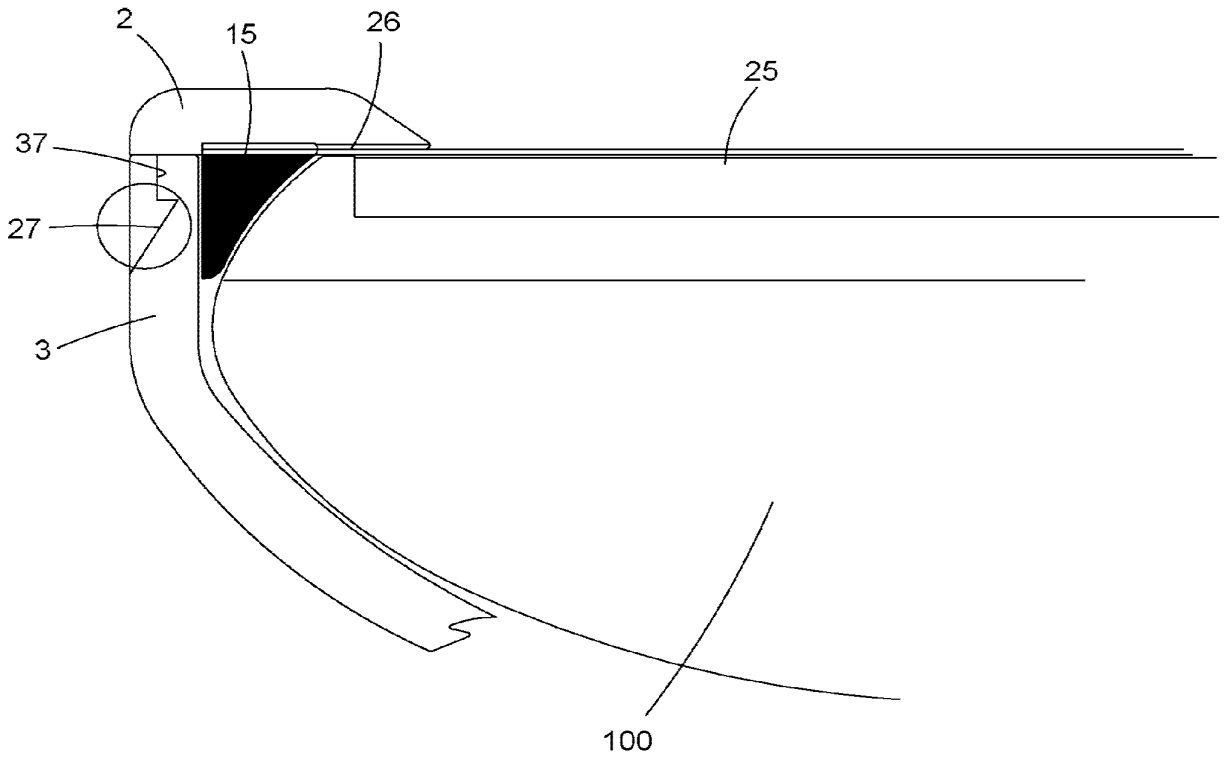

FIG. 4J

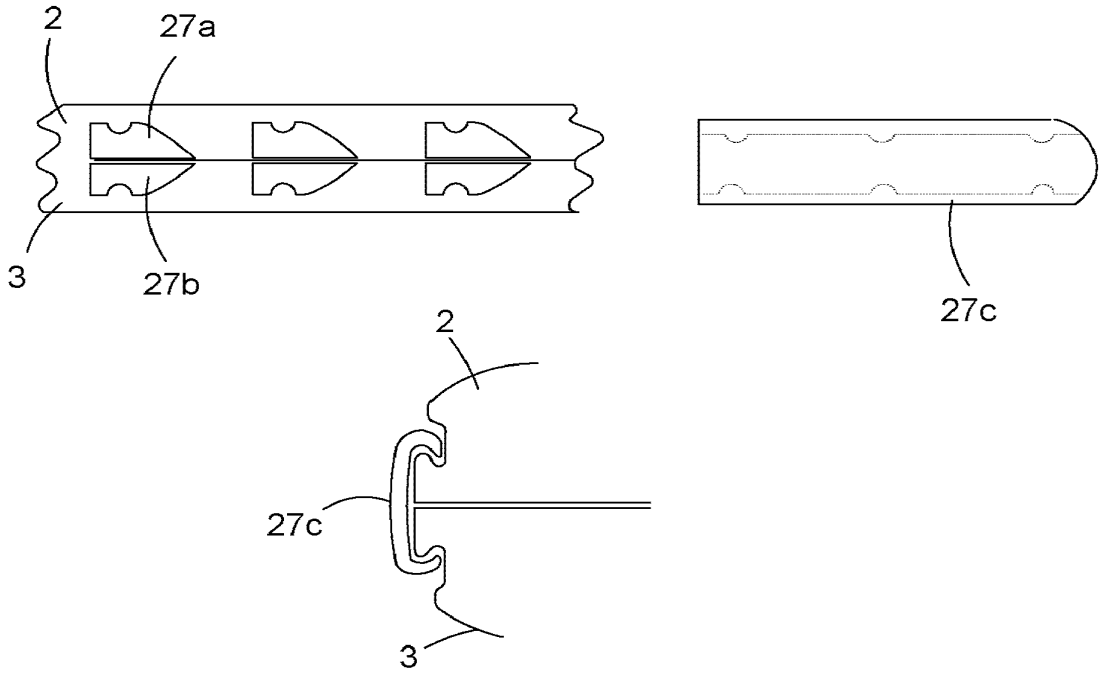

FIG. 4K

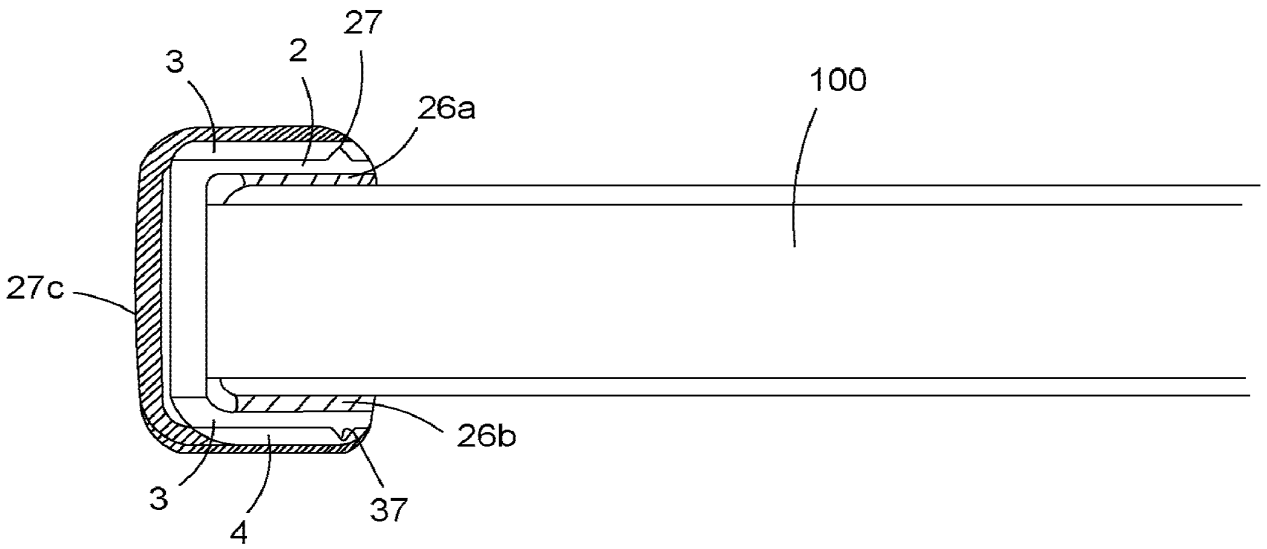

FIG. 4L

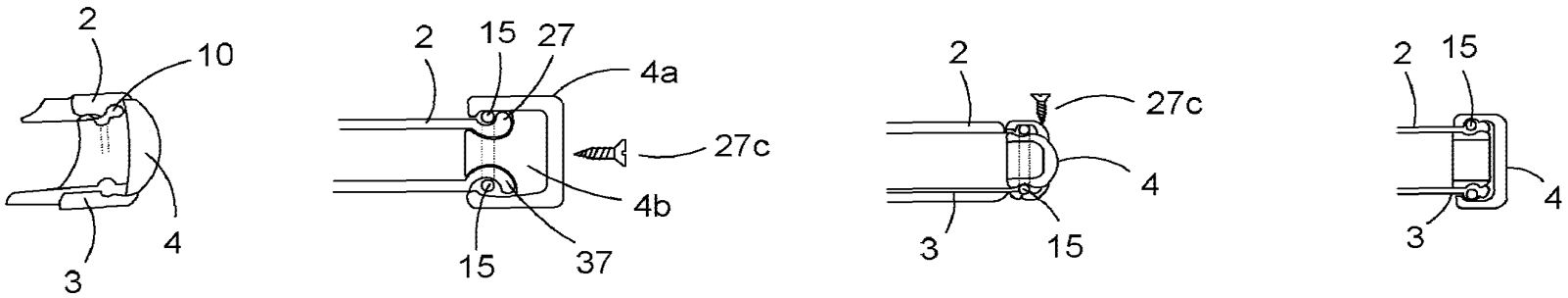

FIG. 4M

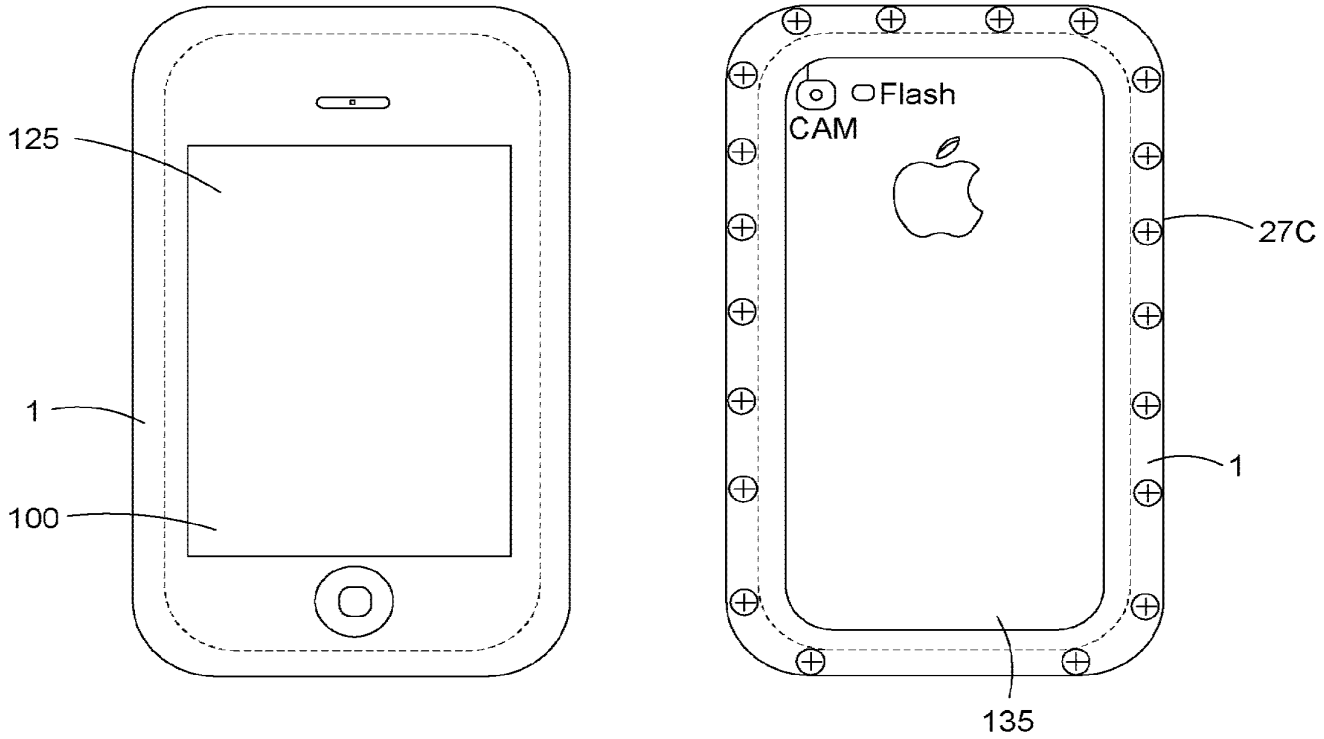

FIG. 4N

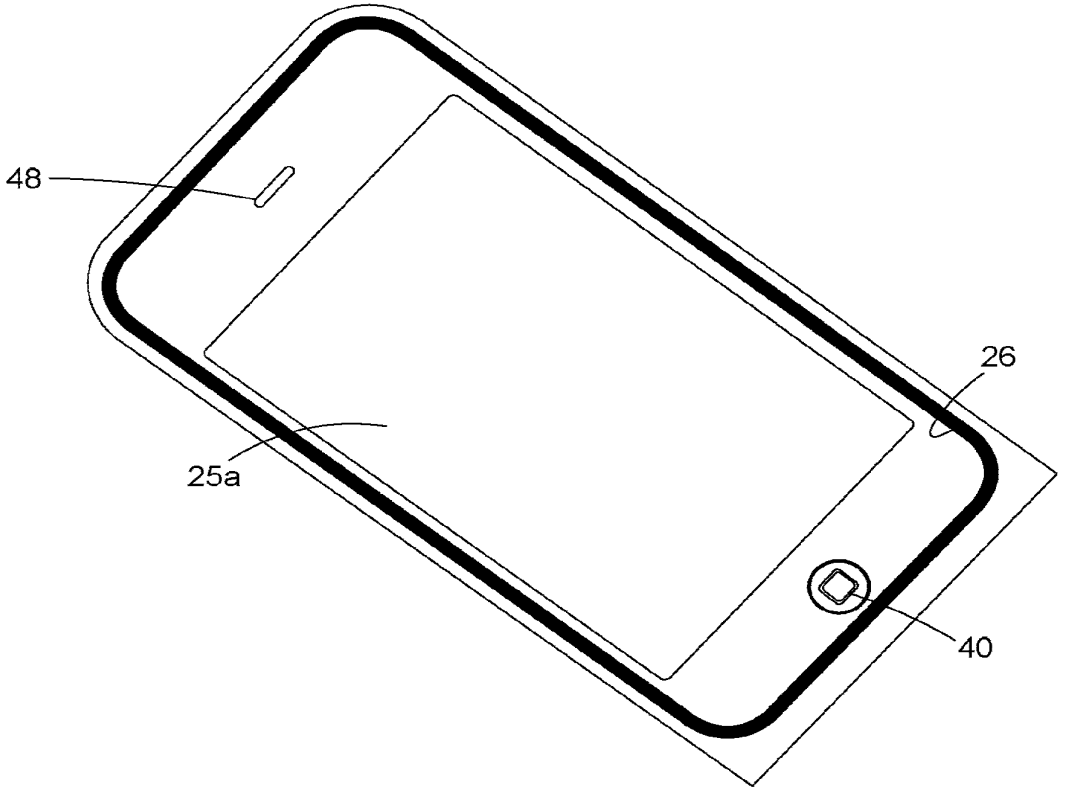

FIG. 5A

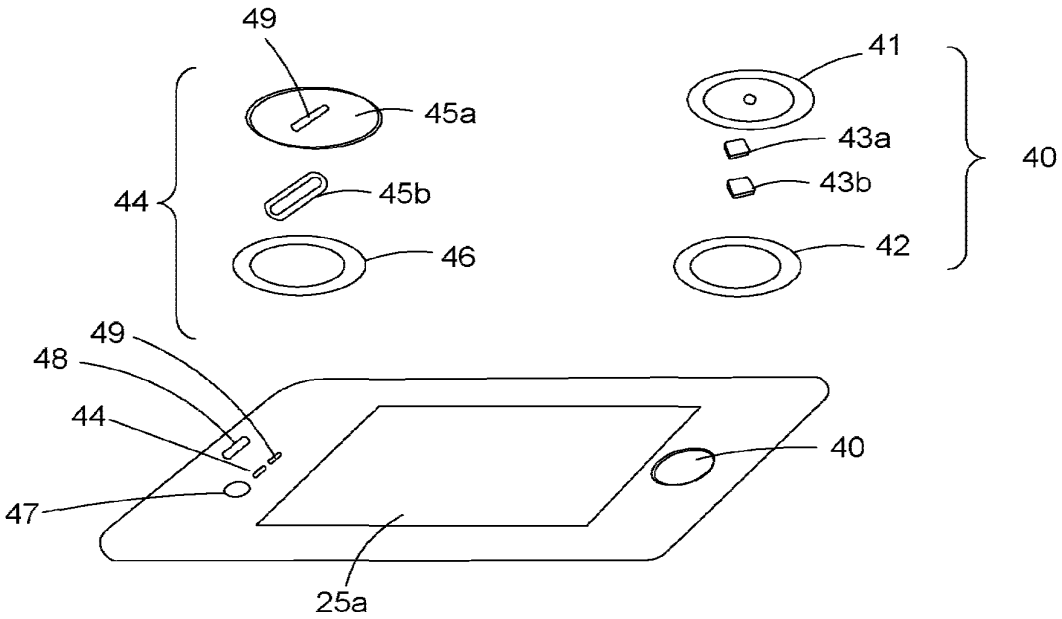

FIG. 5B

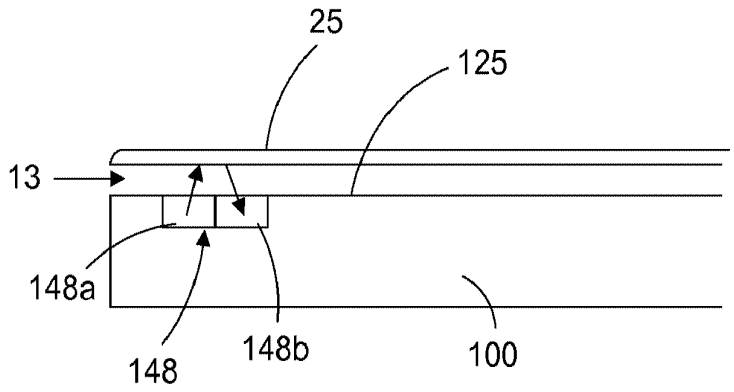
25
125
13
148a
148
148b
100

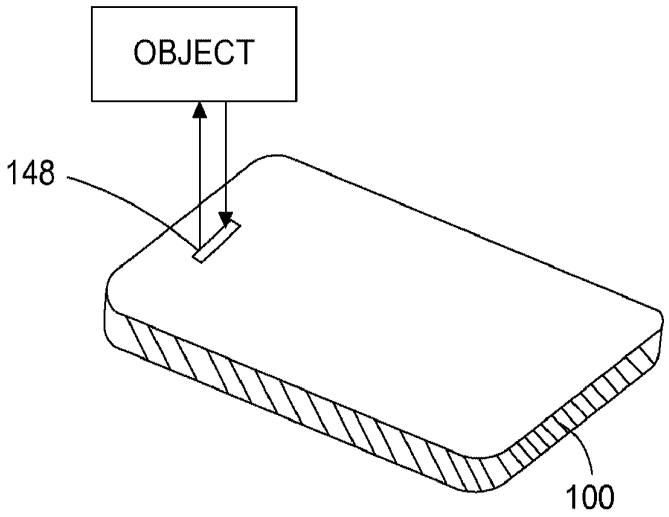
OBJECT
148
100

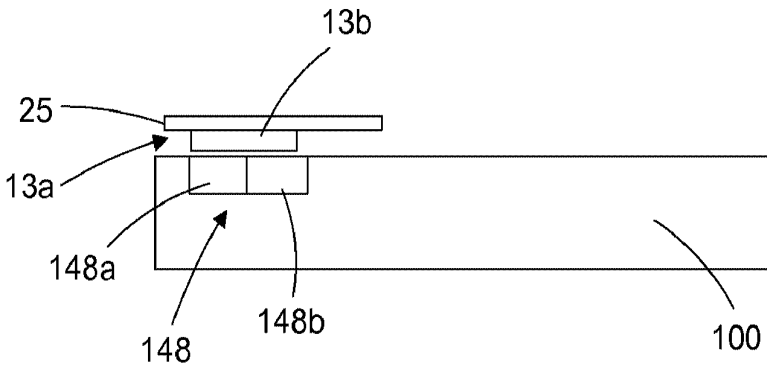
13b
25
13a
148a
148
148b
100

FIG. 5C

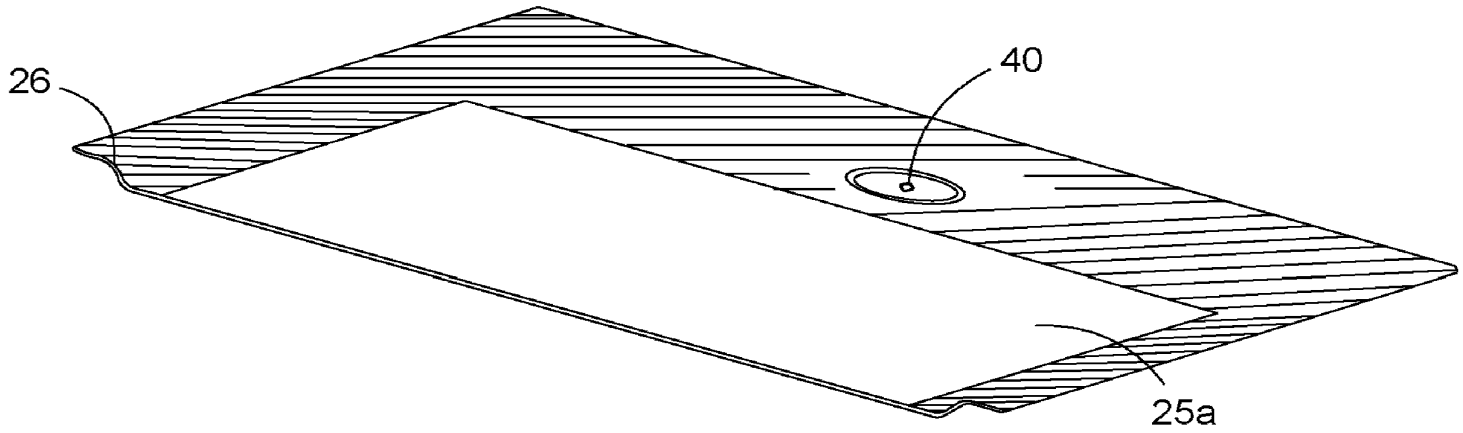

FIG. 5D

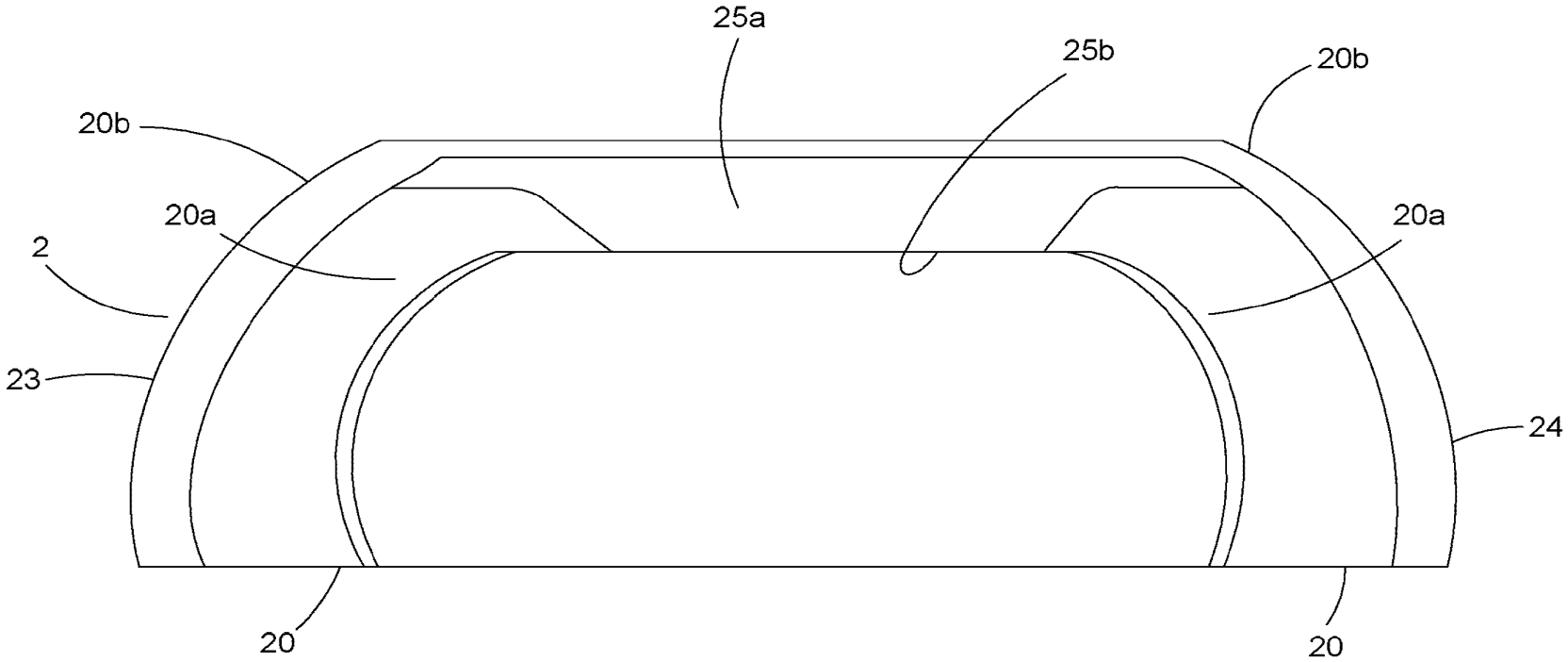

FIG. 6A

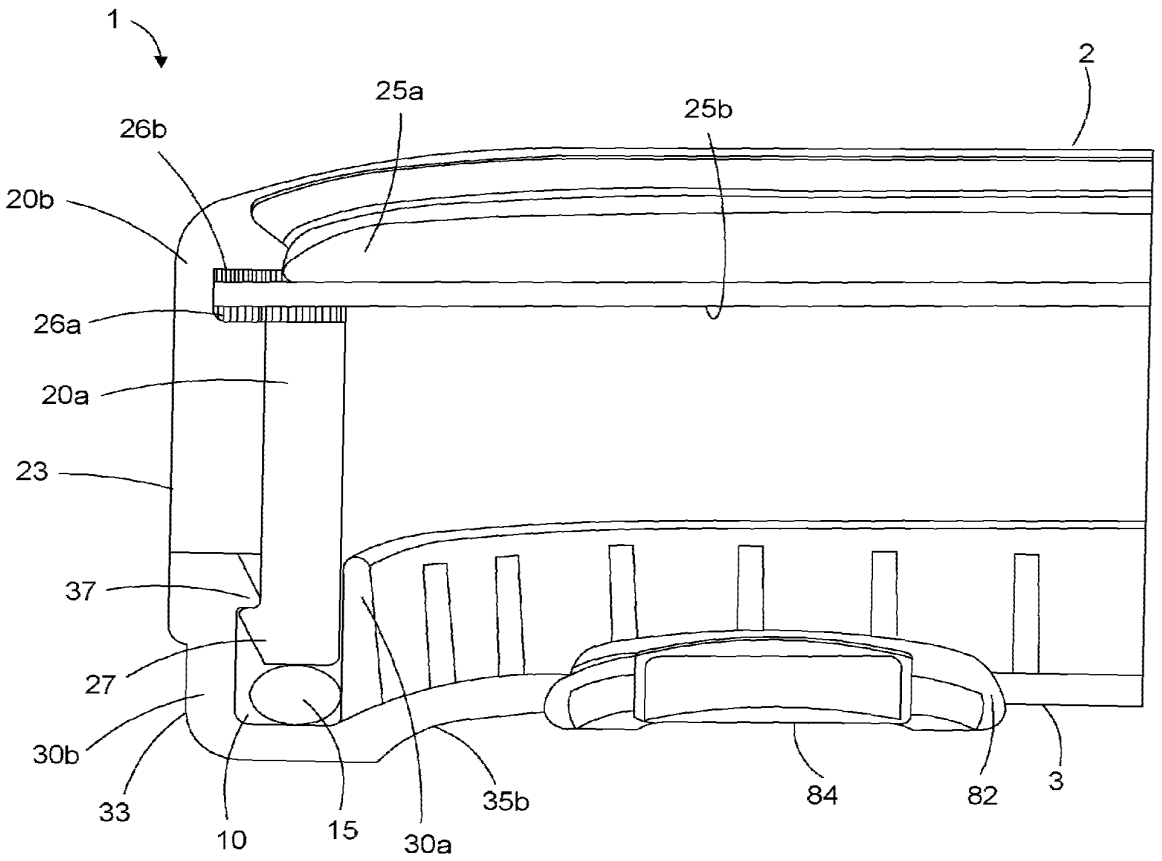

FIG. 6B

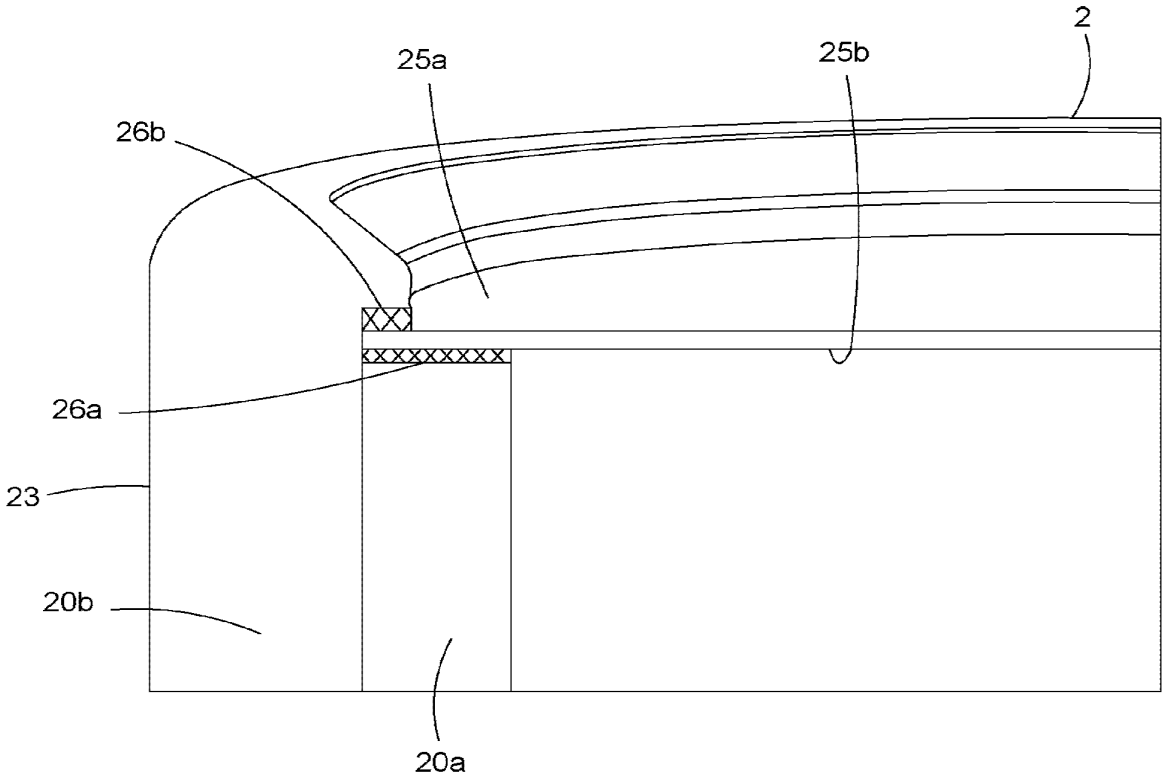

FIG. 6C

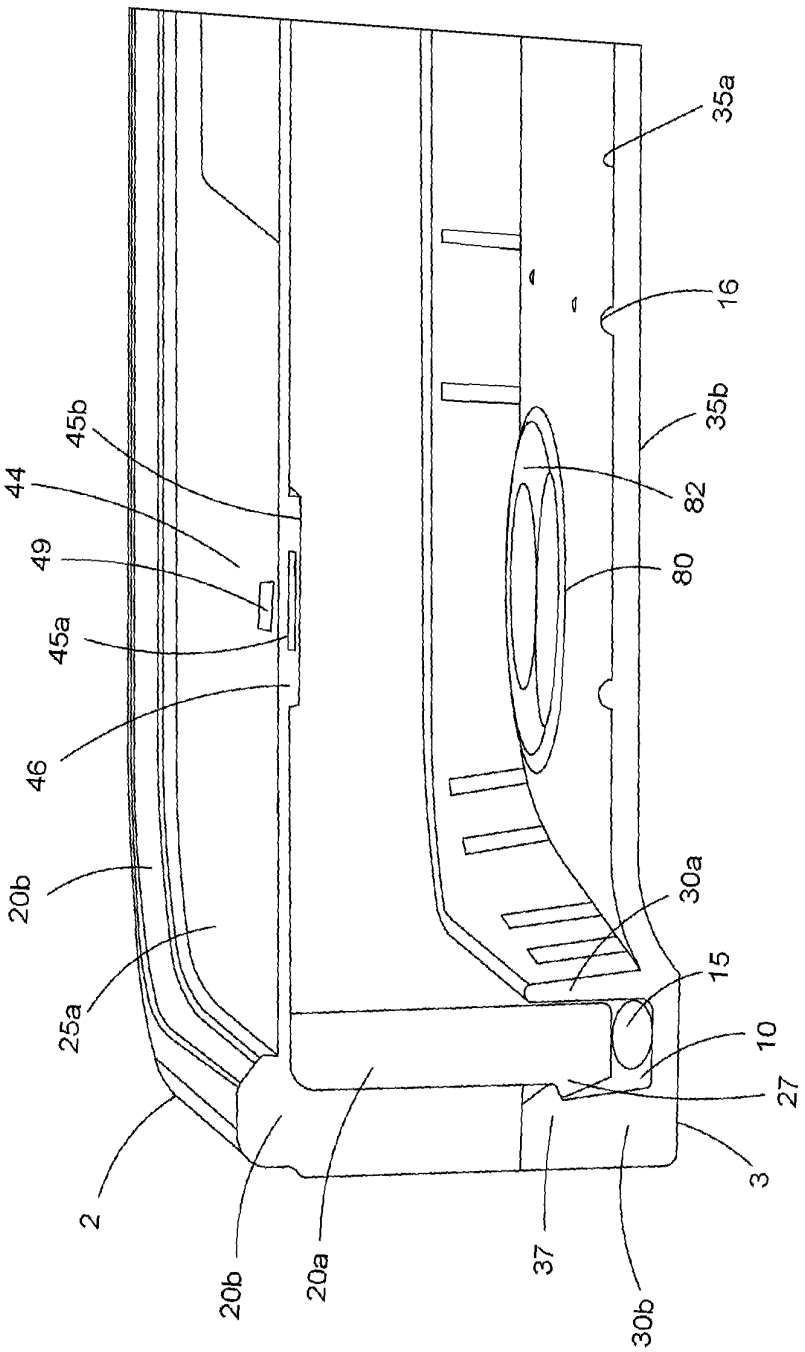
35a
16
35b
82
80
45b
44
49
45a
46
20b
25a
30a
15
10
27
3
2
20b
20a
37
30b

FIG. 6D

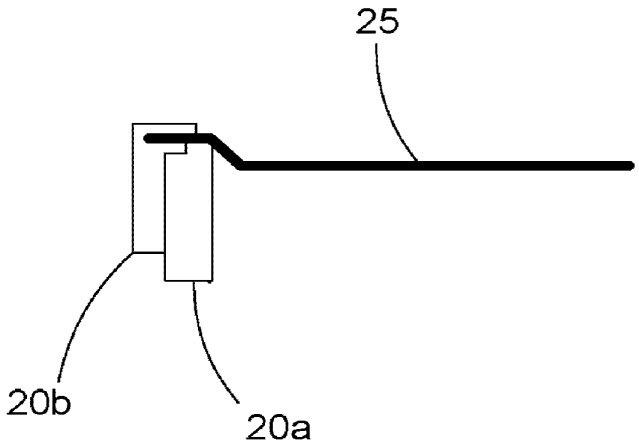

FIG. 6E

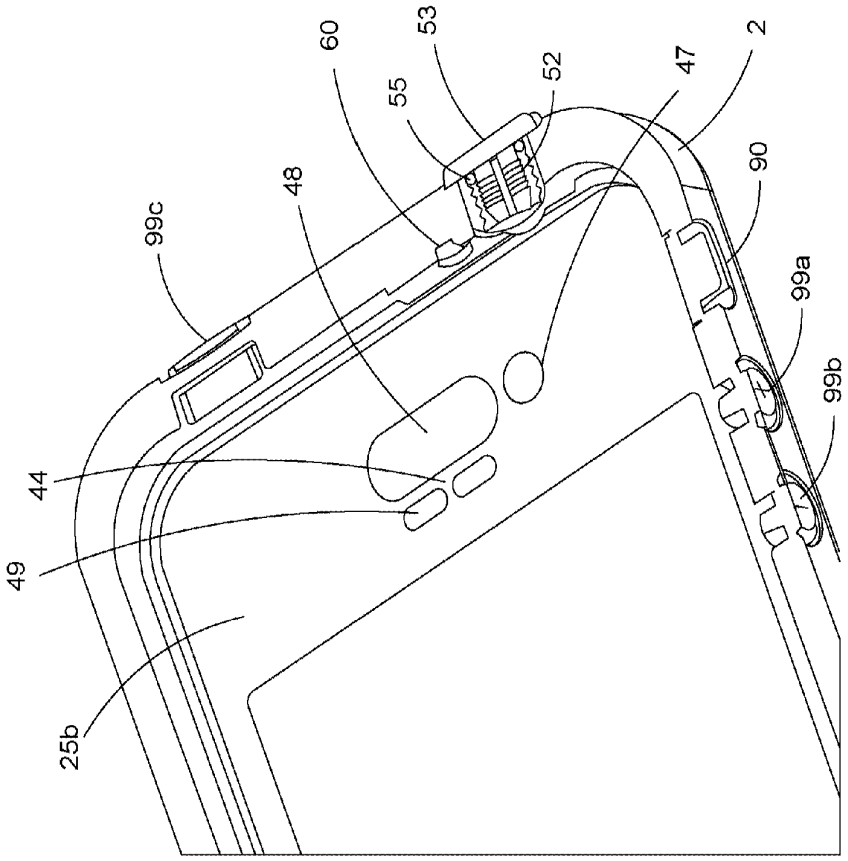

FIG. 6F

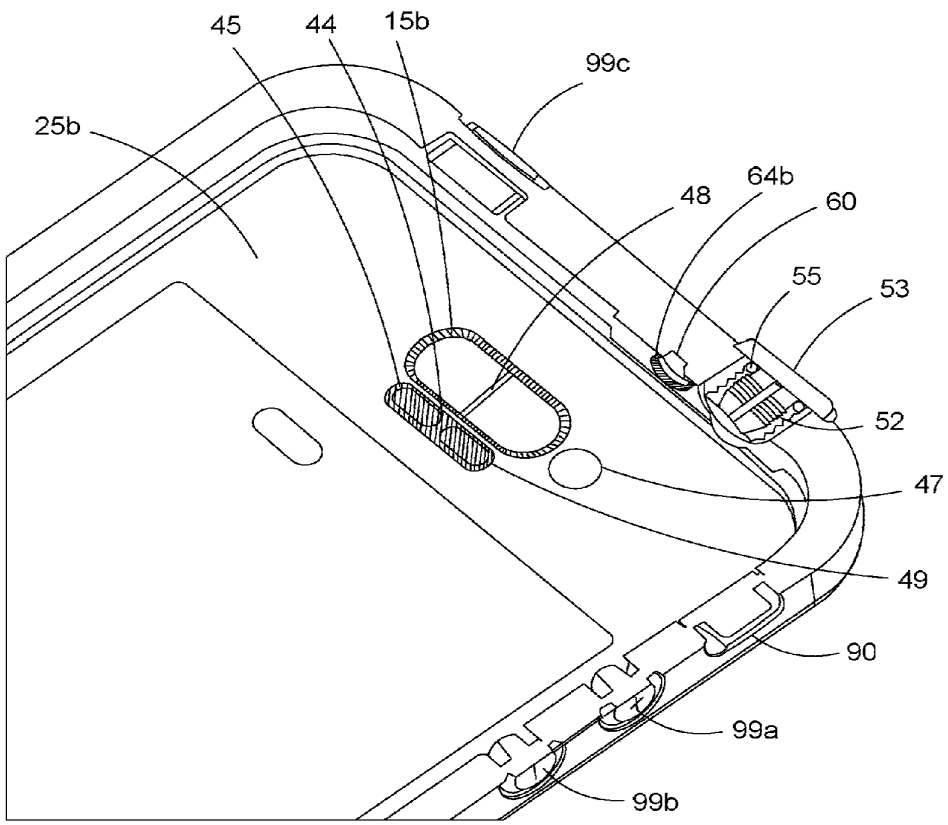

FIG. 6G

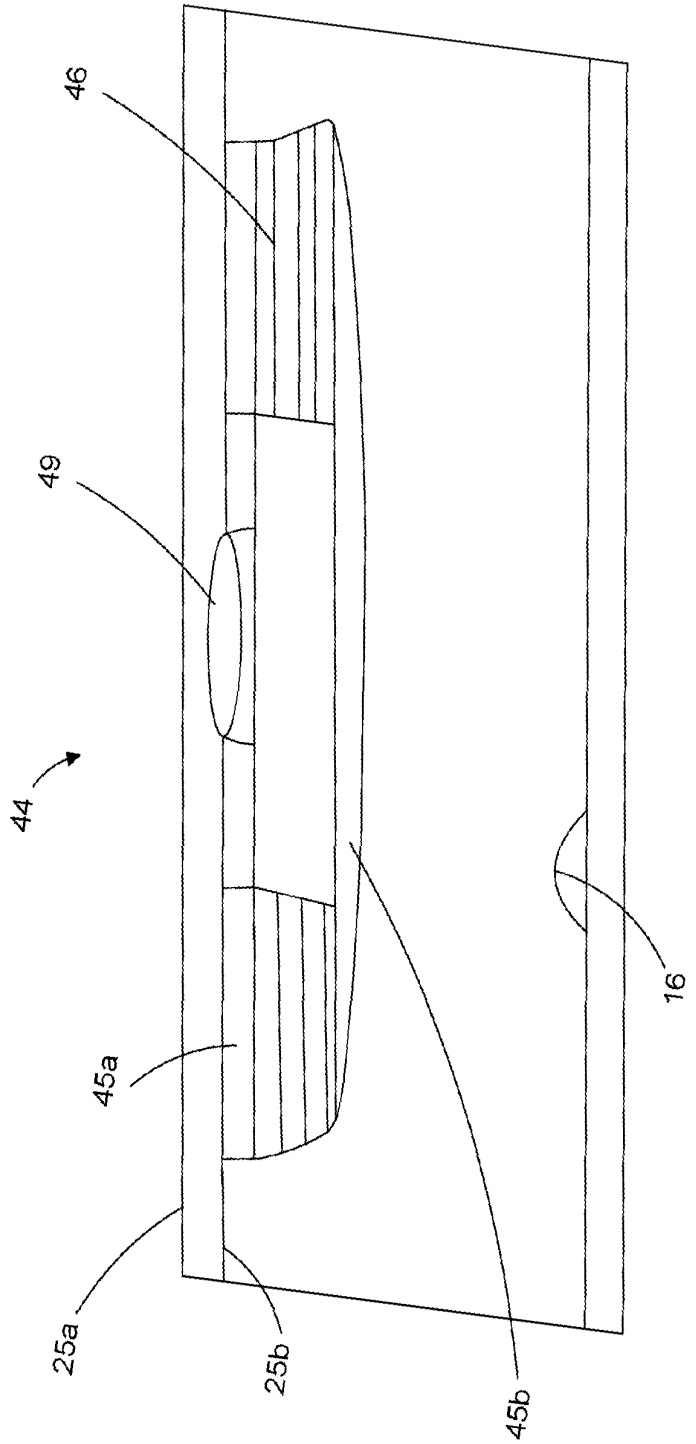

FIG. 6H

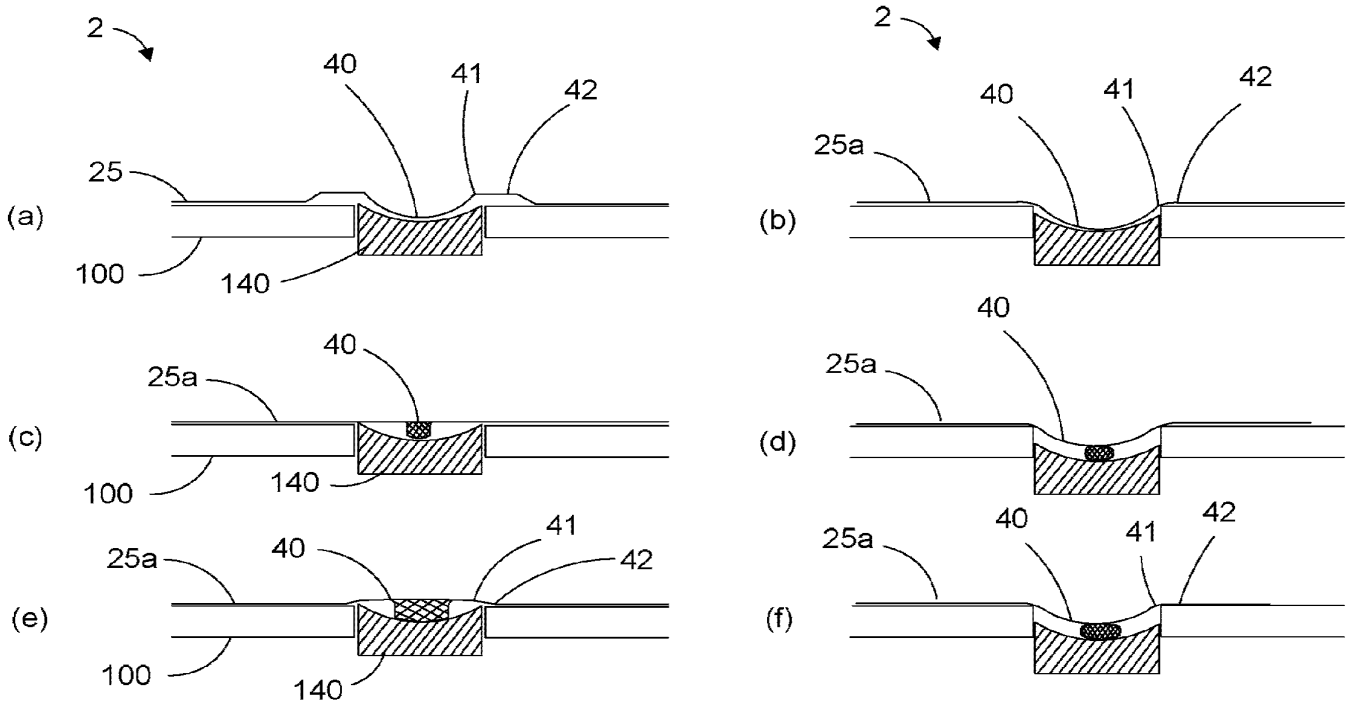
2
40
41
42
25
(a)
100
140
2
40
41
42
25a
(b)
25a
40
(c)
100
140
40
25a
(d)
25a
40
41
(e)
100
140
40
41
42
25a
(f)

FIG. 7A

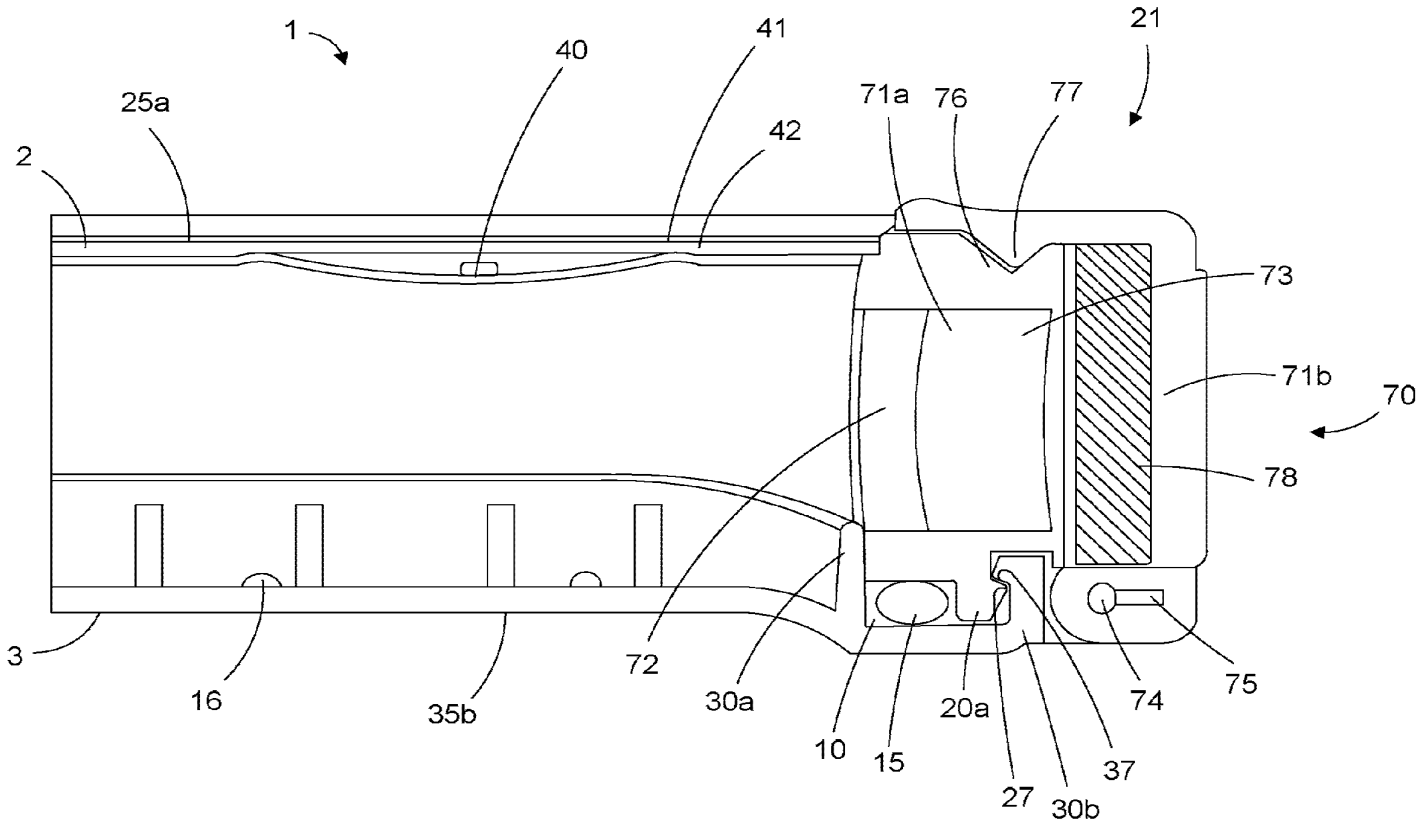
1
40
41
21
25a
71a
76
77
42
2
73
71b
70
78
3
16
35b
72
30a
20a
74
75
10
15
27
37
30b

FIG. 7B

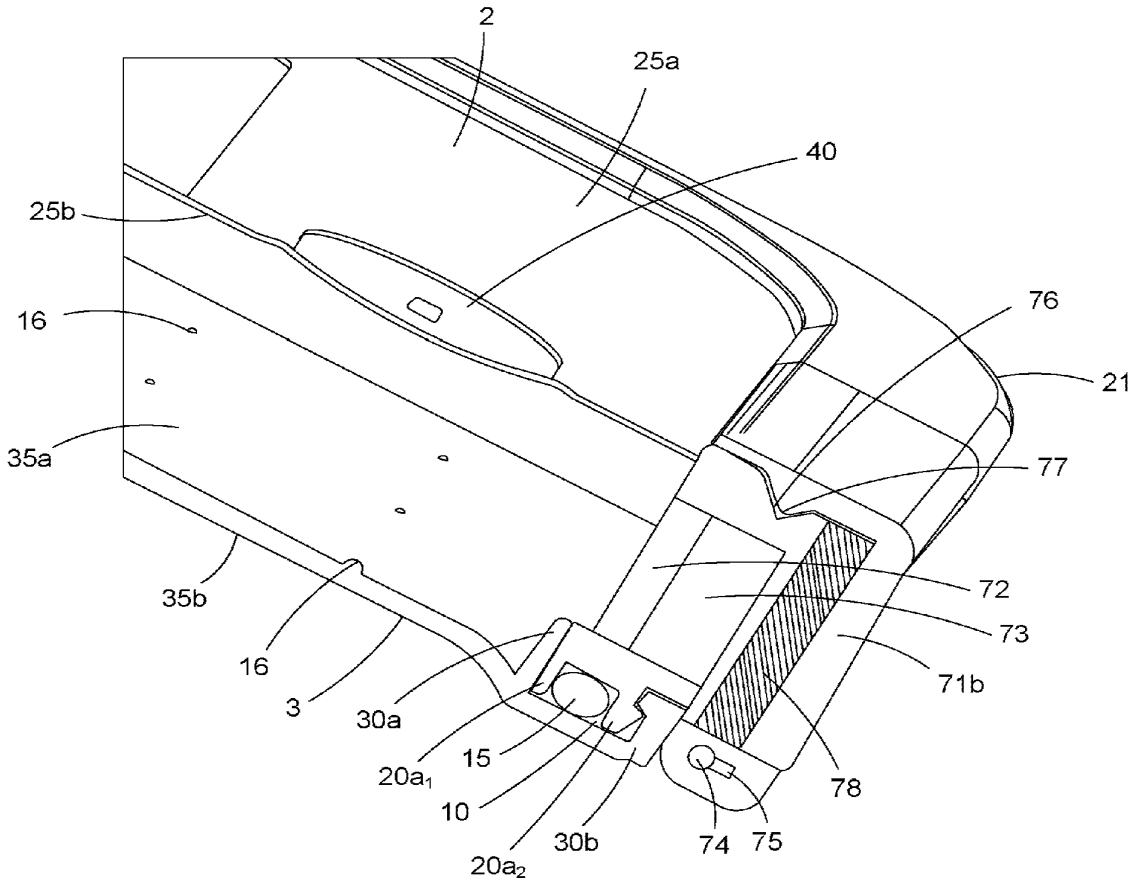
2
25a
40
25b
16
76
21
35a
77
72
35b
73
16
71b
3
30a
15
$20a_1$
10
78
30b
74
75
$20a_2$

FIG. 7C

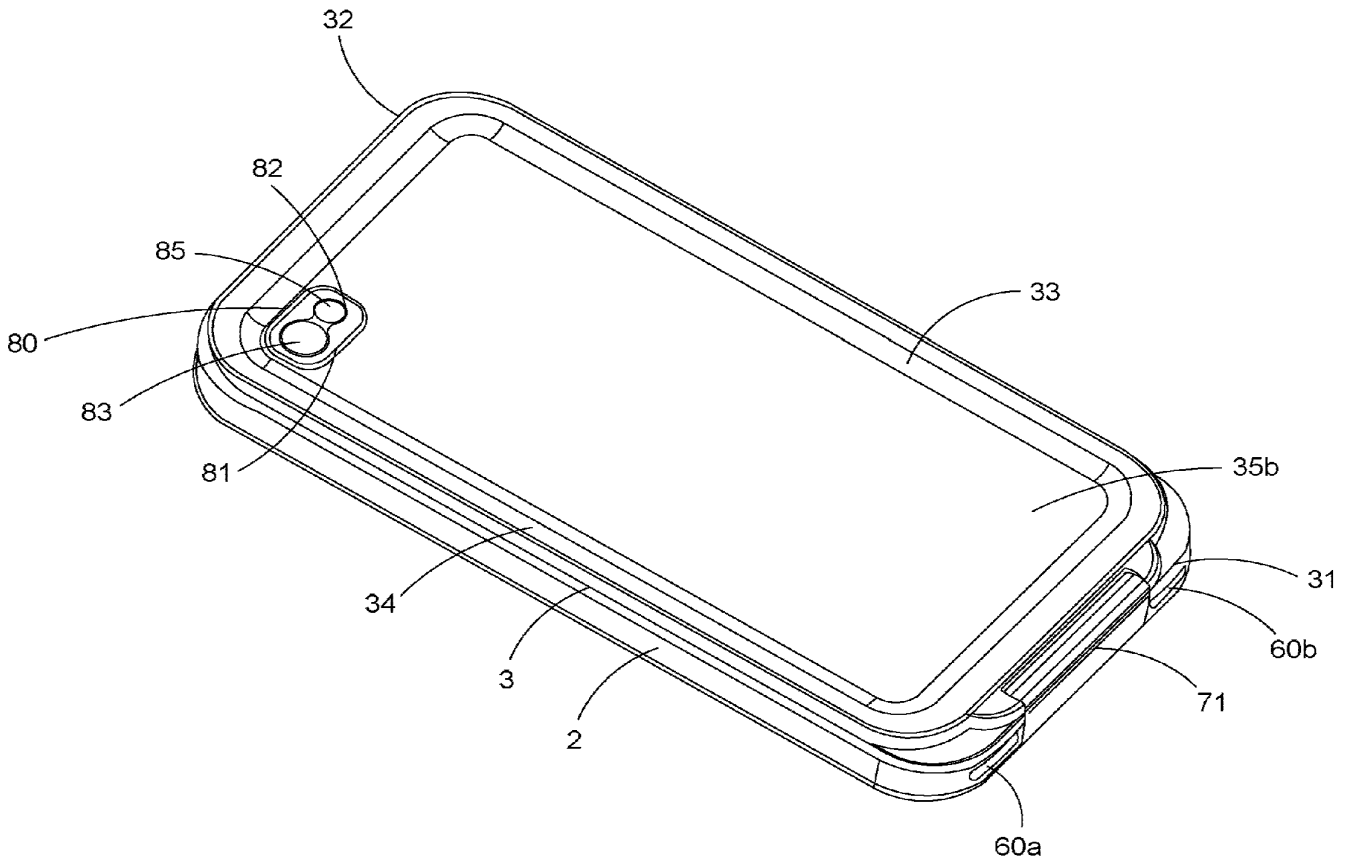

FIG. 8A

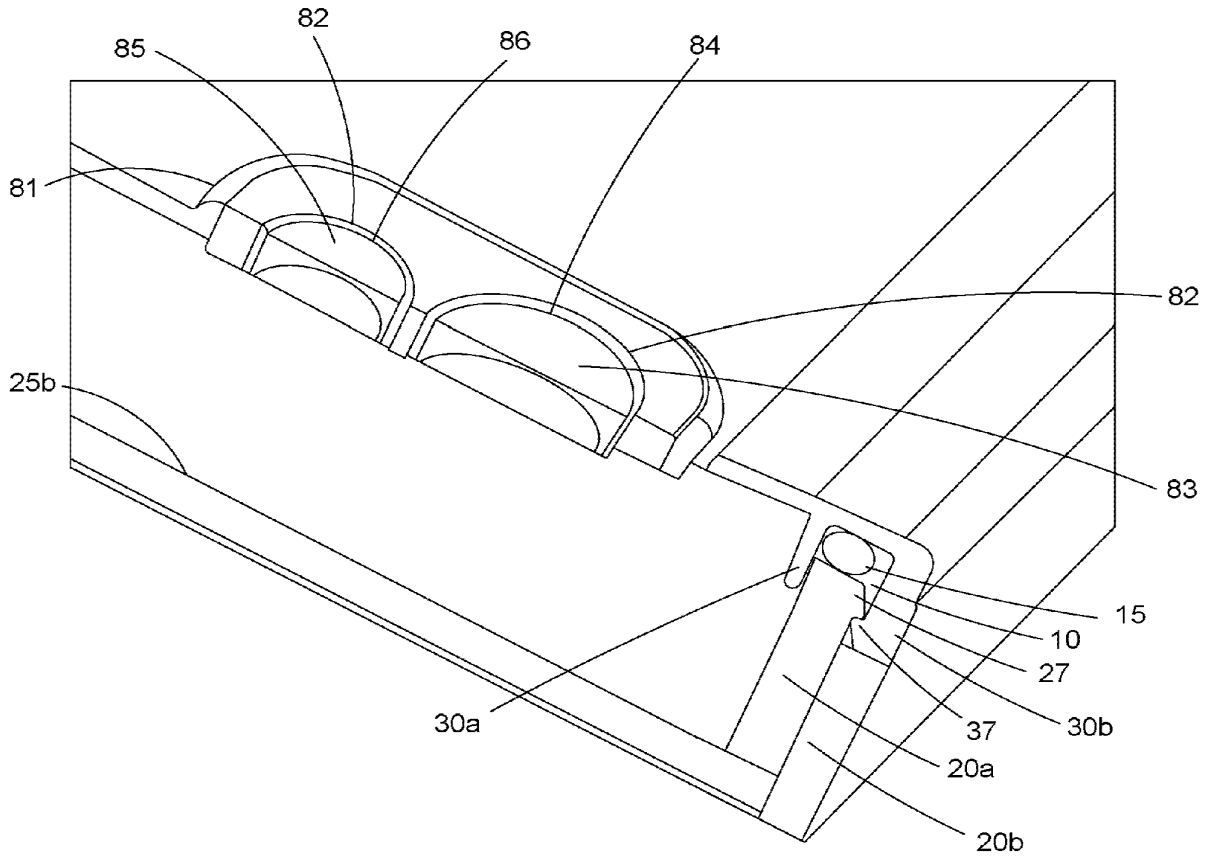

FIG. 8B

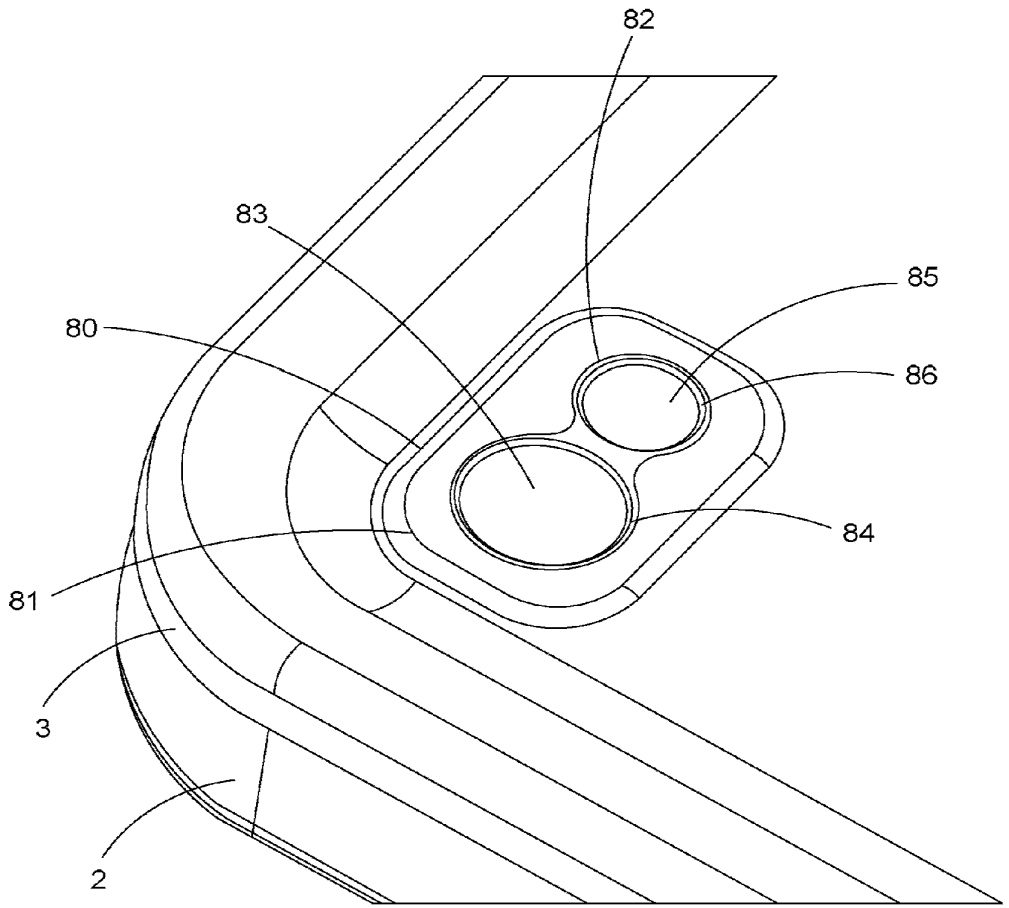

FIG. 8C

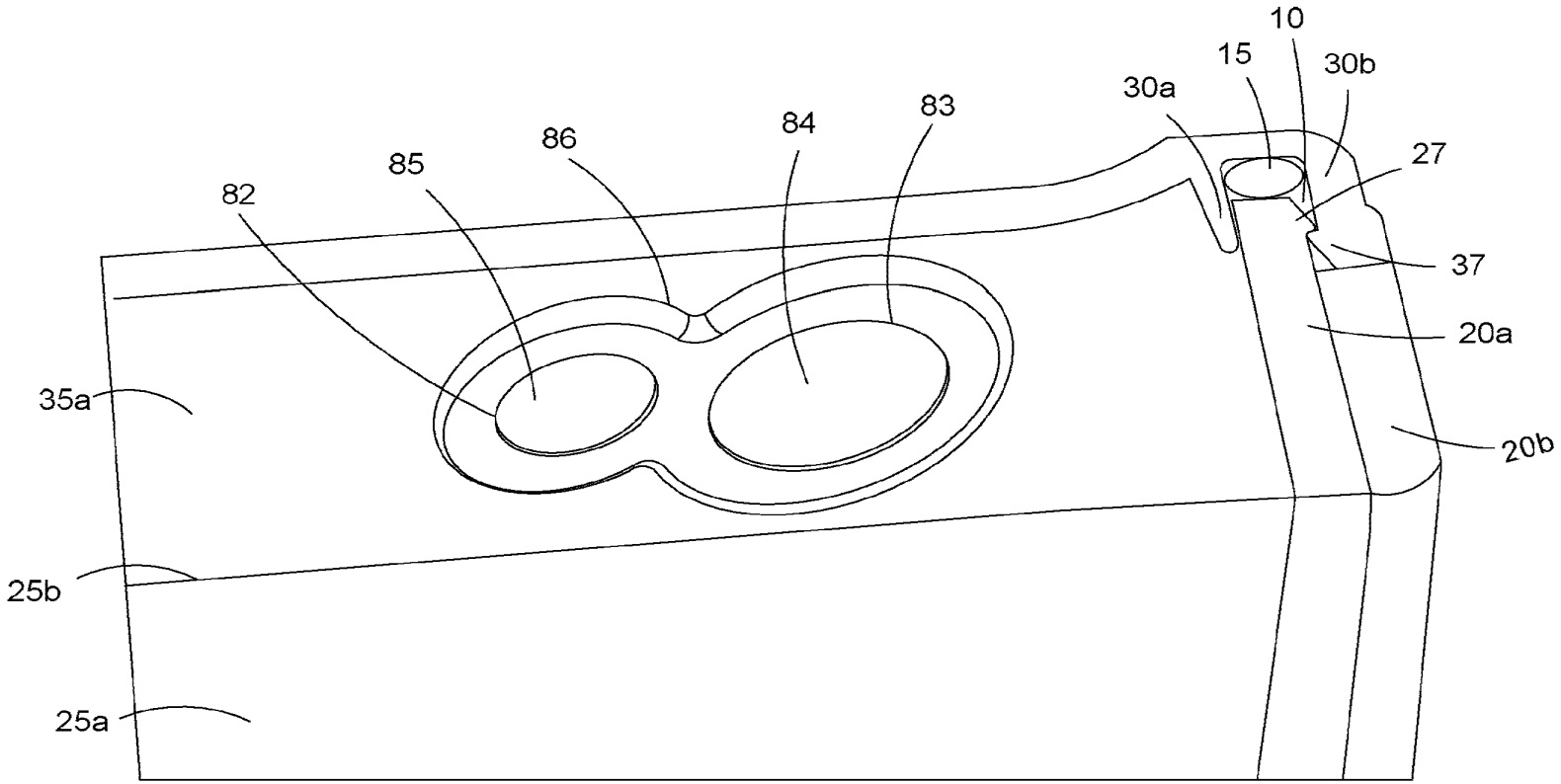

FIG. 8D

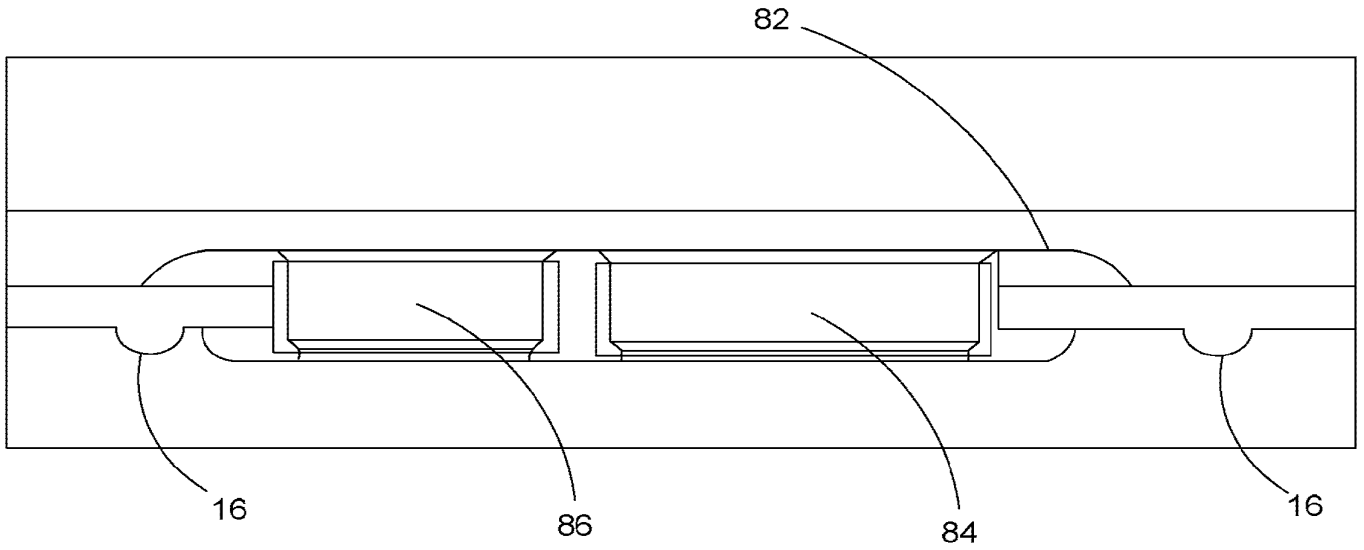

FIG. 8E

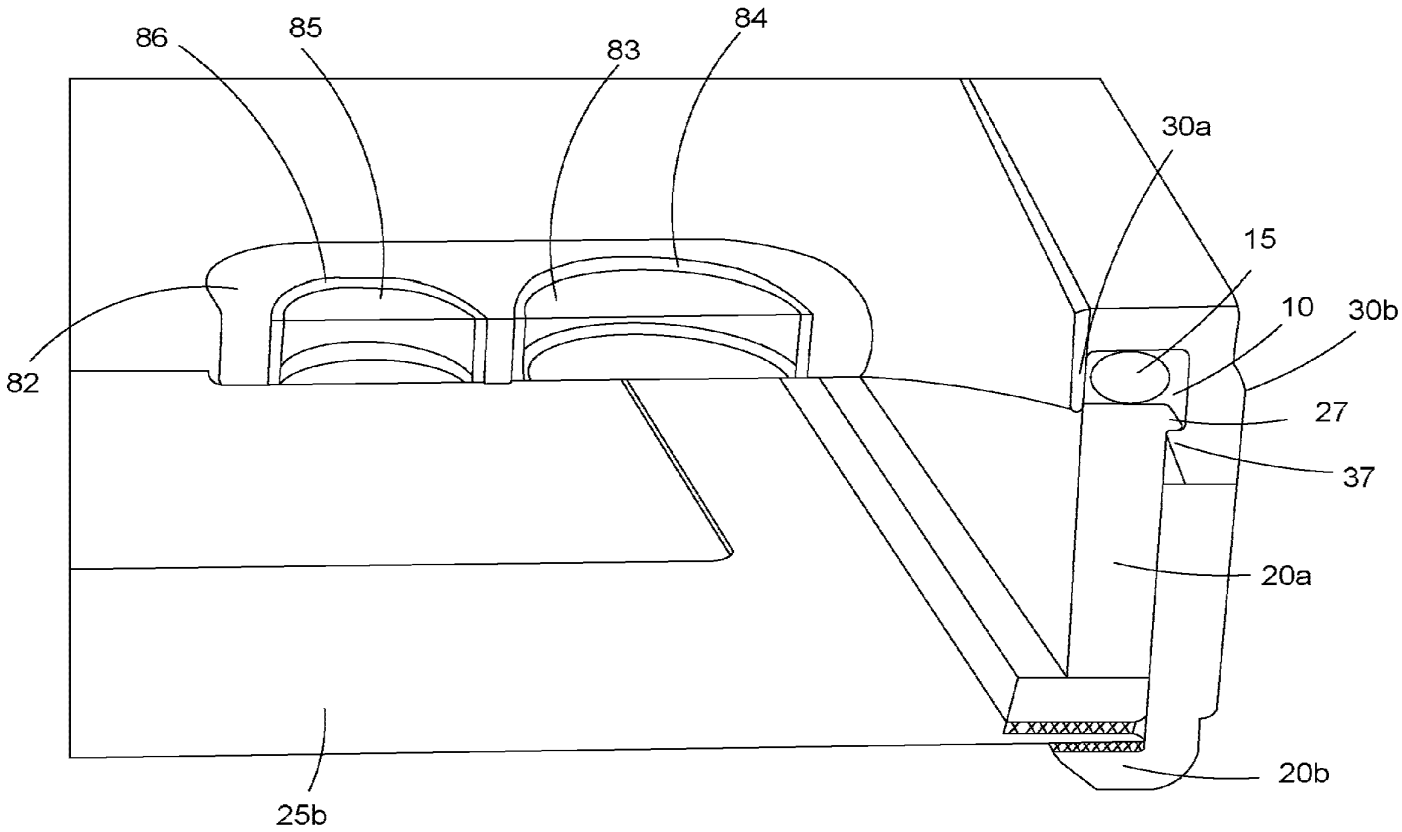

FIG. 8F

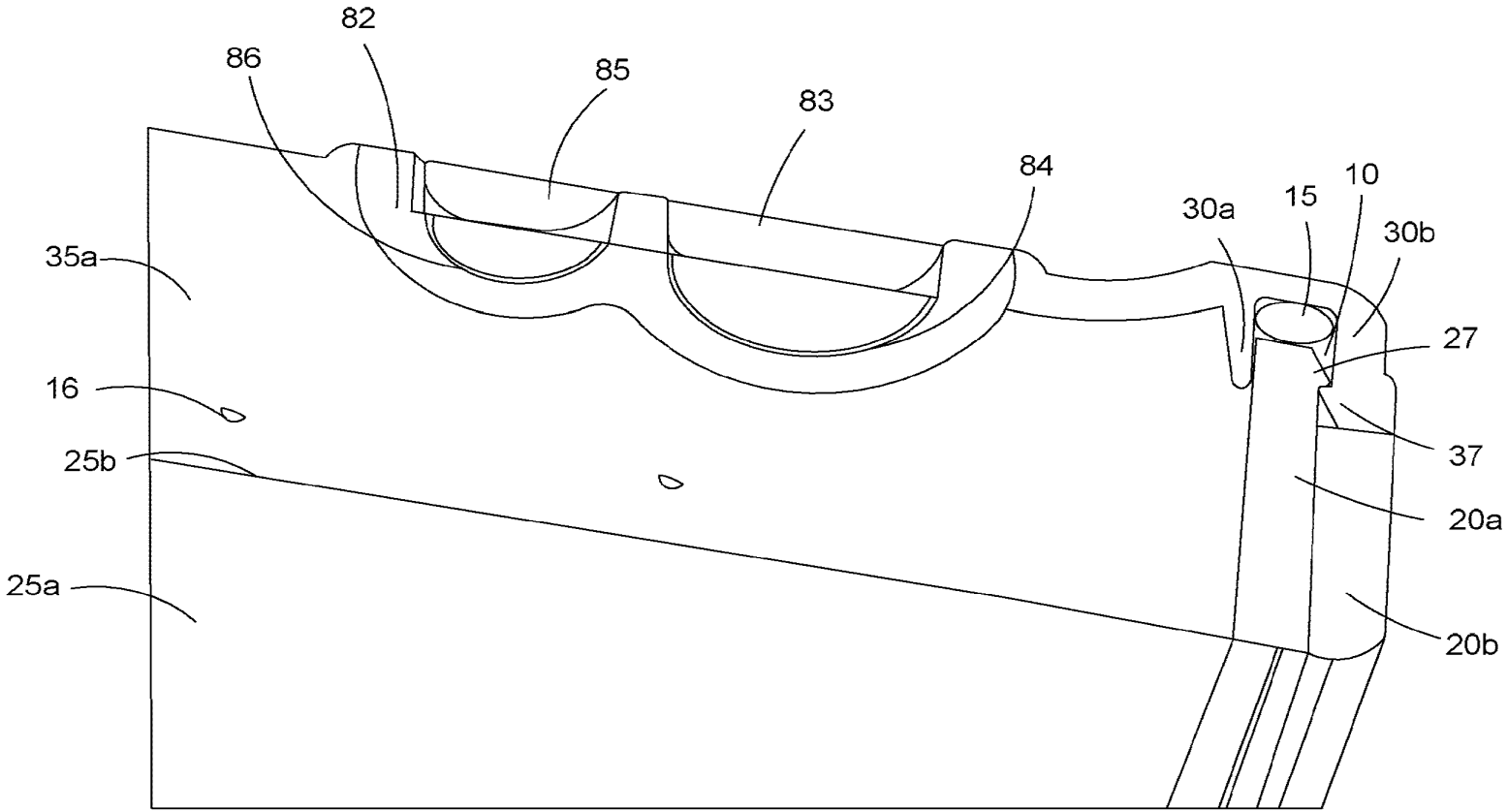

FIG. 8G

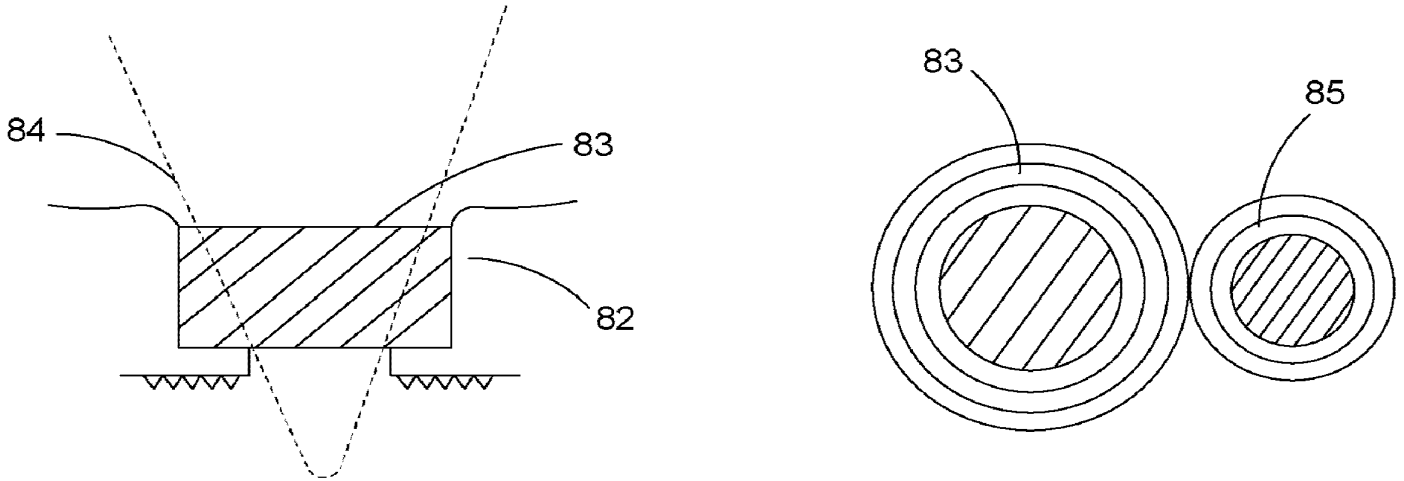

FIG. 8H

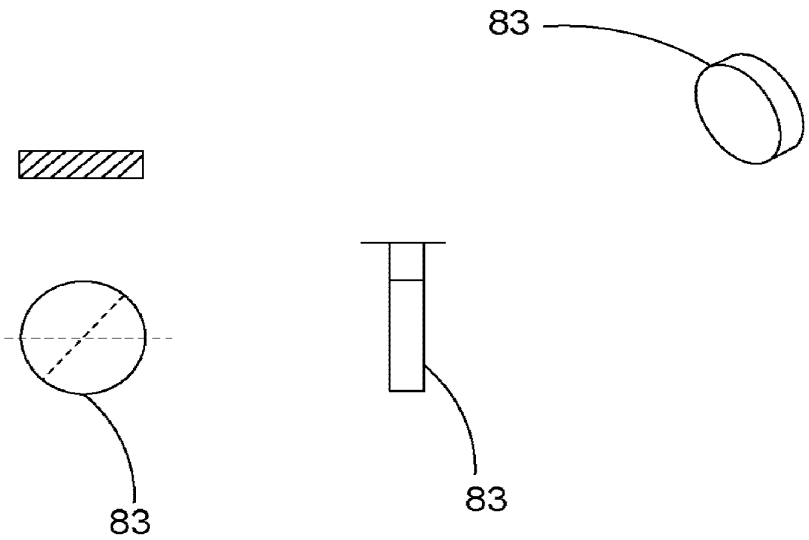

FIG. 8I

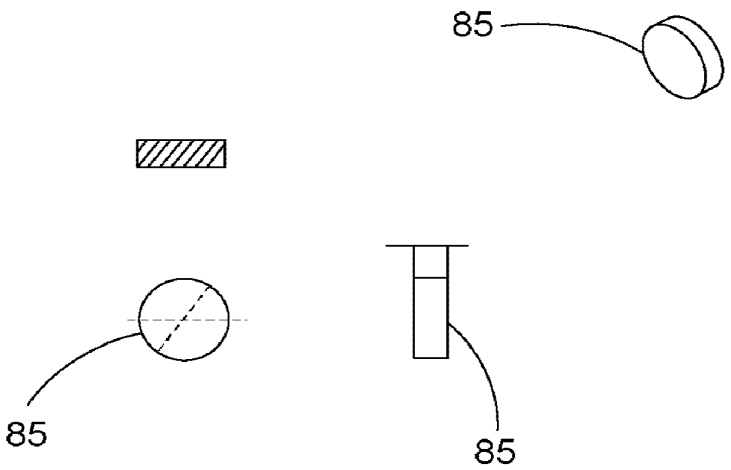

FIG. 8J

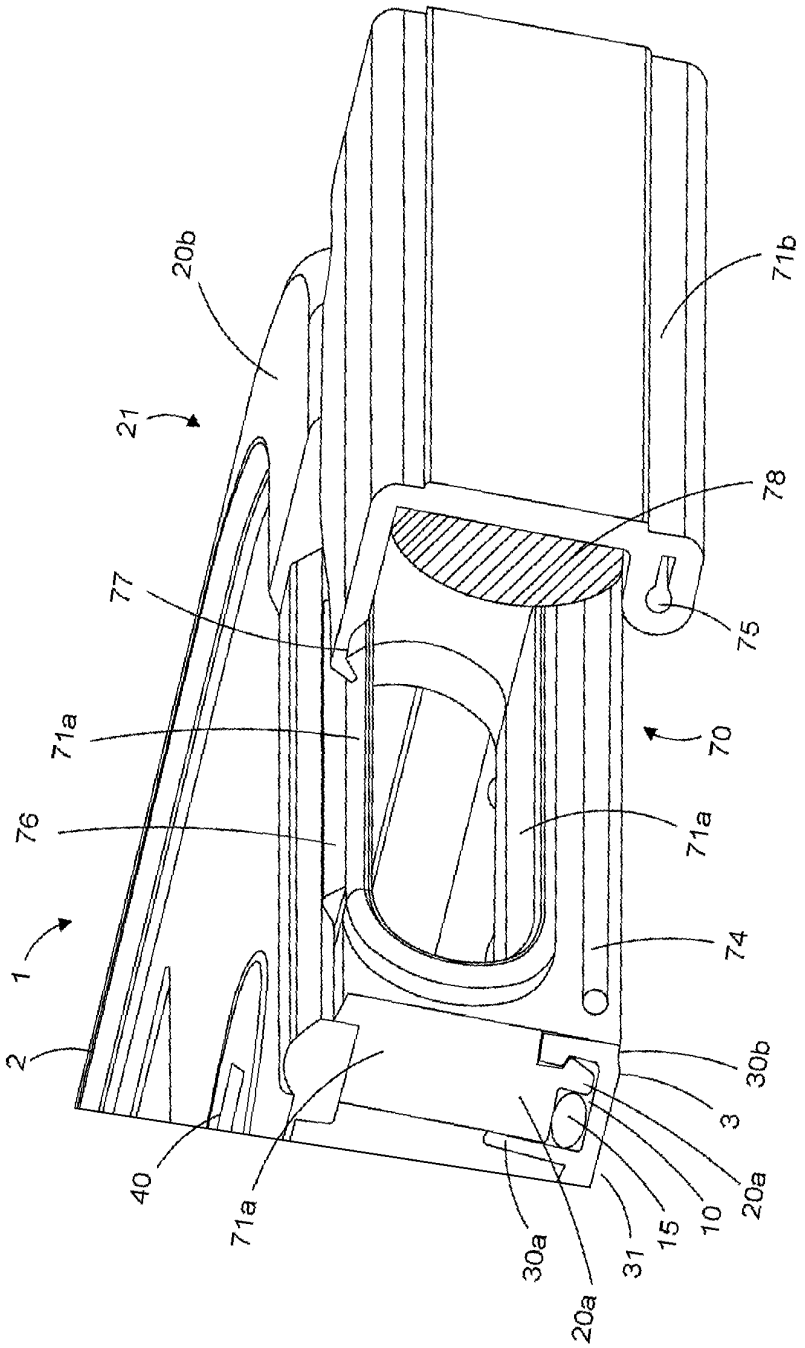
20b
21
71b
78
77
75
71a
70
76
71a
74
1
2
30b
3
40
71a
20a
10
15
31
30a
20a

FIG. 9A

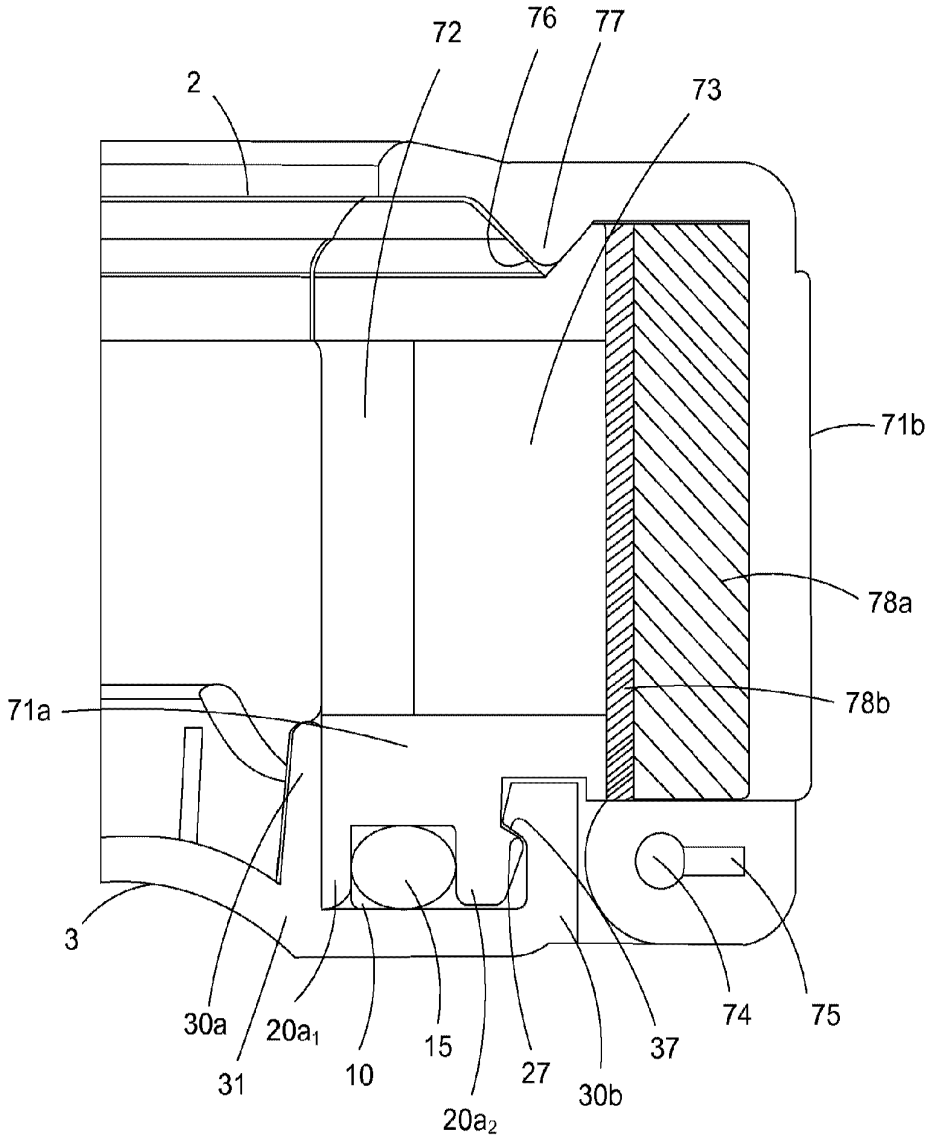
72
76
77
2
73
71b
78a
78b
71a
3
30a
$20a_1$
31
10
15
$20a_2$
27
30b
37
74
75

FIG. 9B

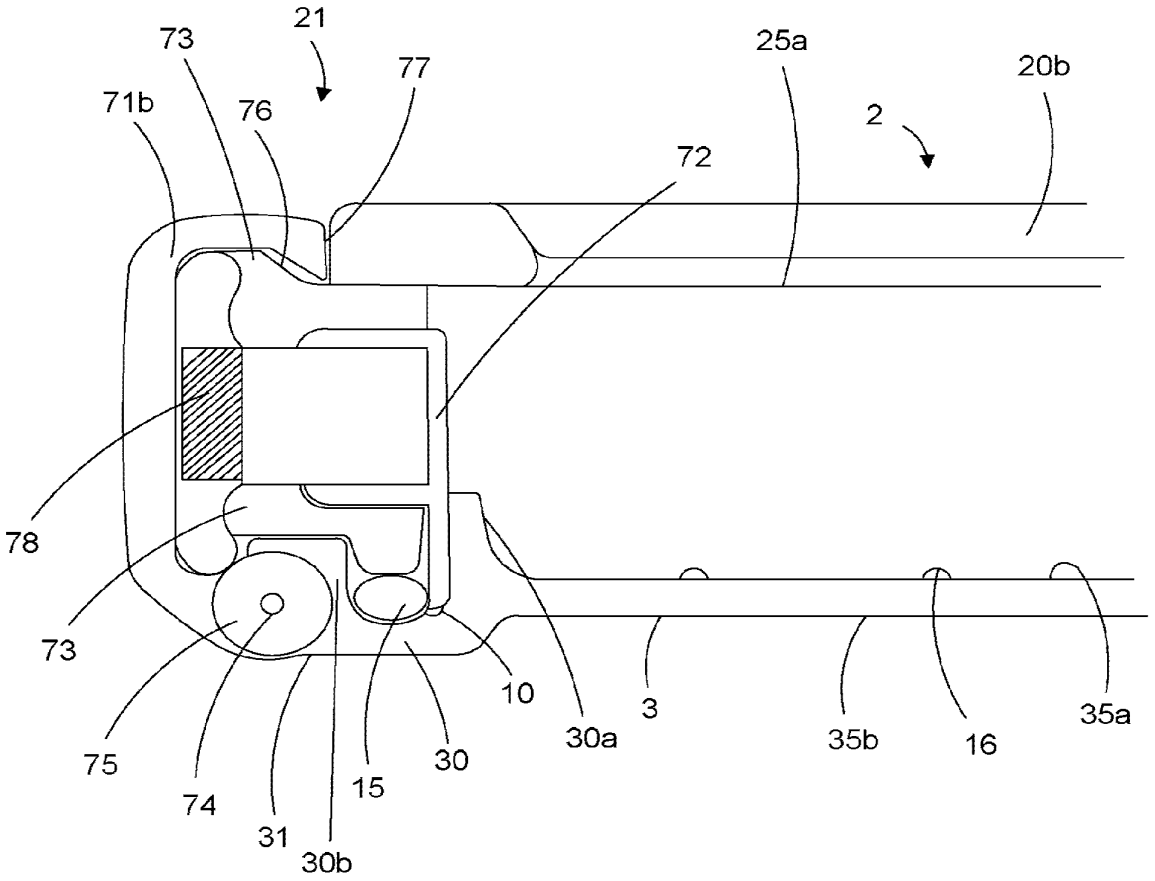
21
73
77
25a
20b
71b
76
2
72
78
73
10
3
35a
75
30a
35b
16
74
30
15
31
30b

FIG. 9C

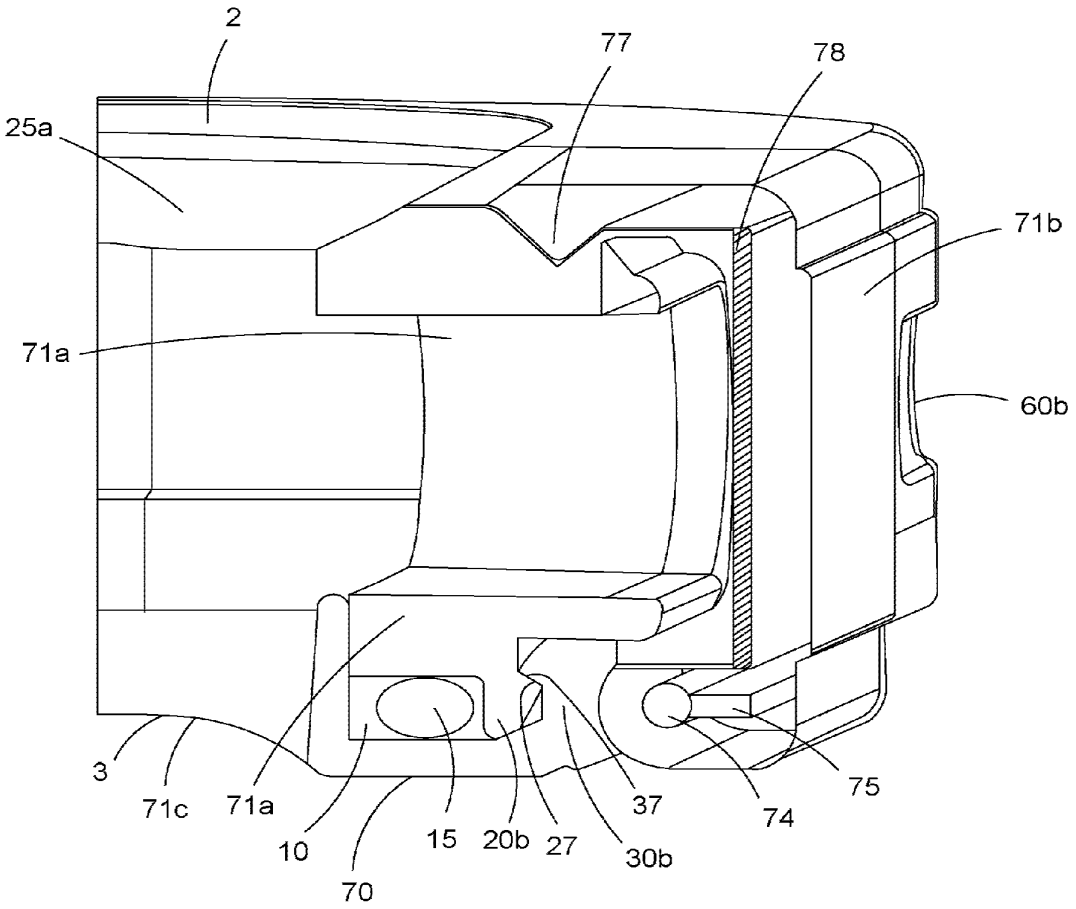

FIG. 9D

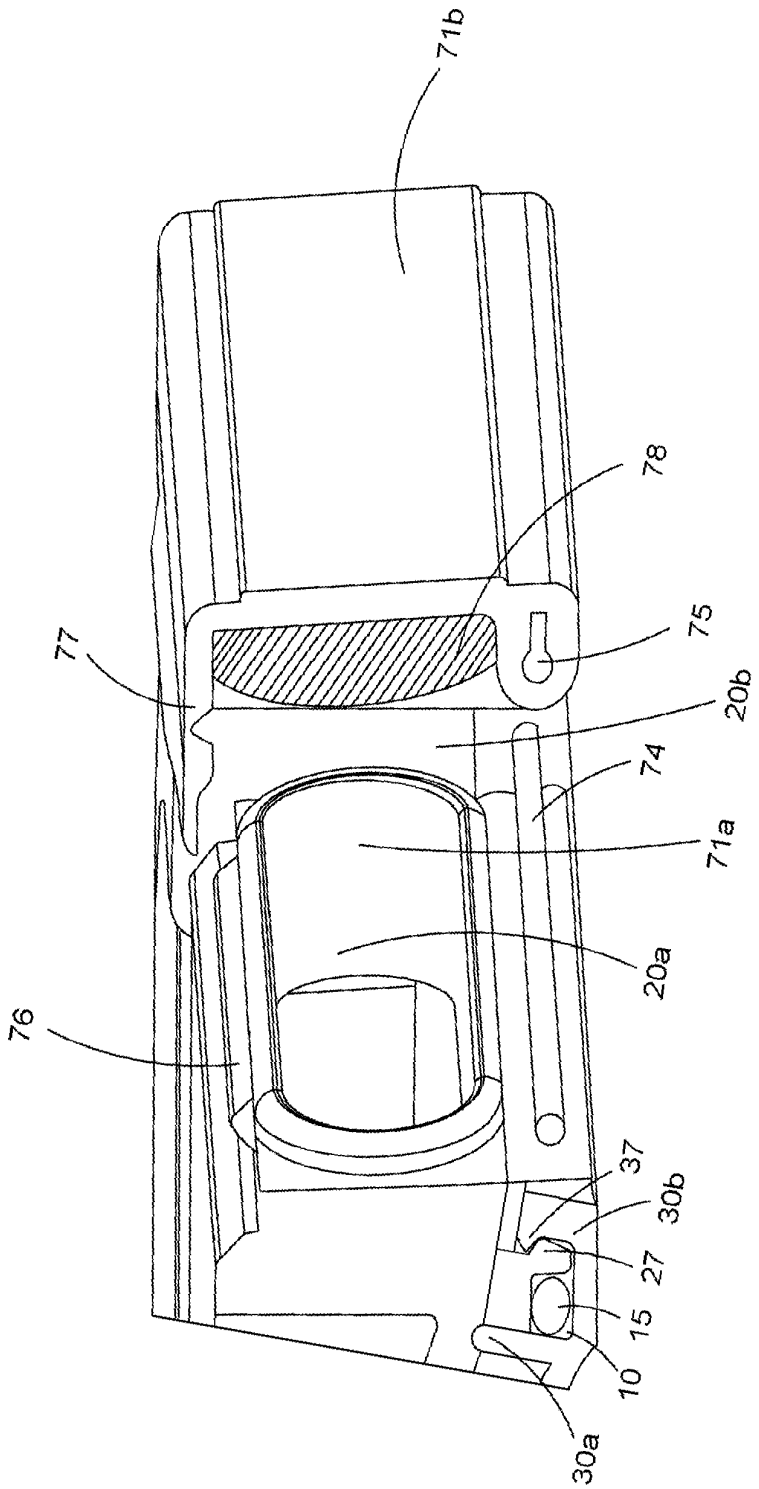

FIG. 9E

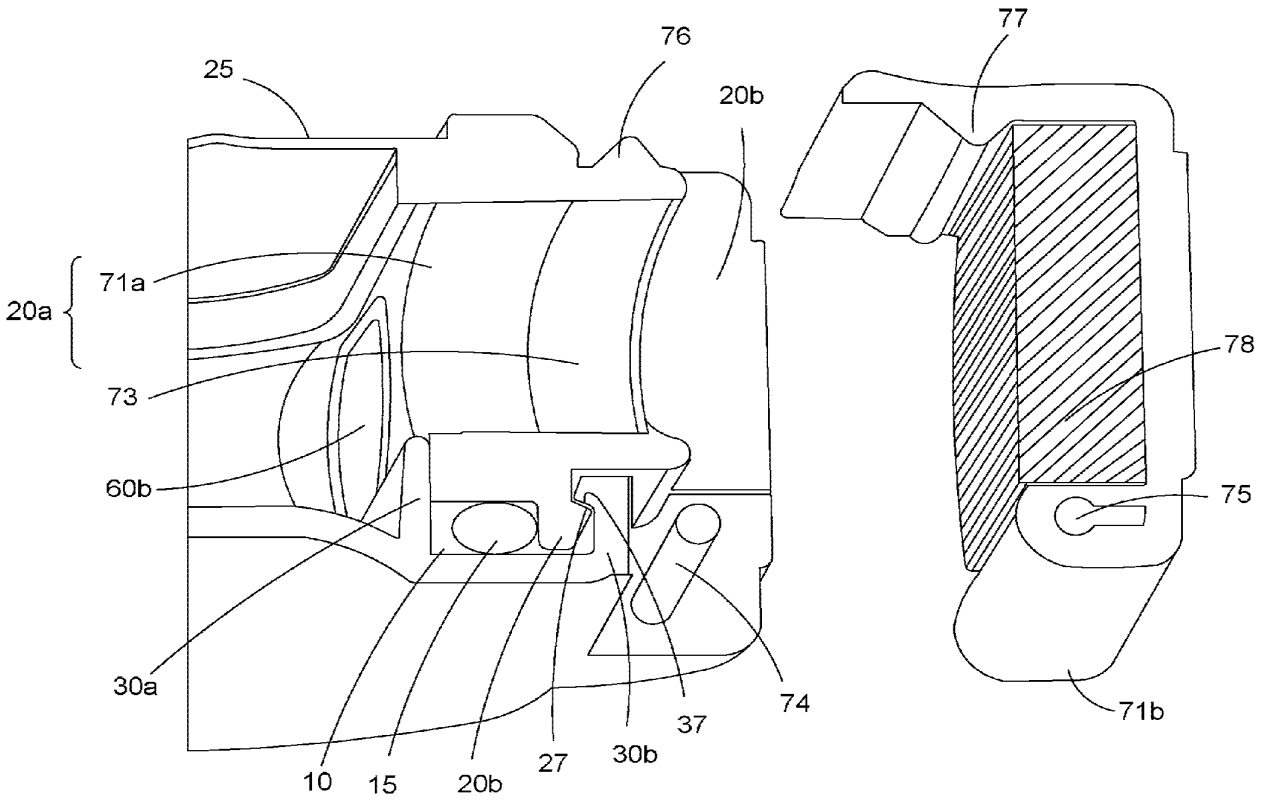

FIG. 9F

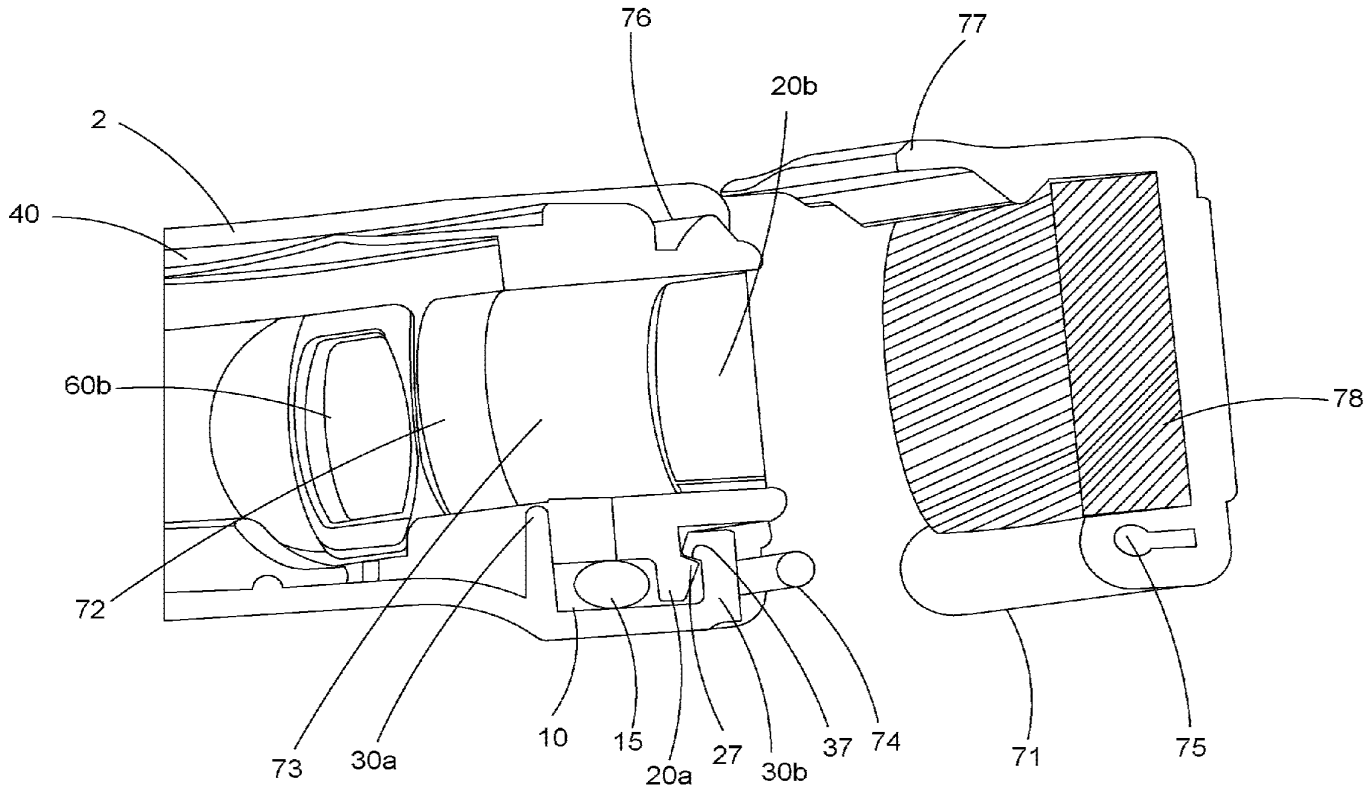

FIG. 9G

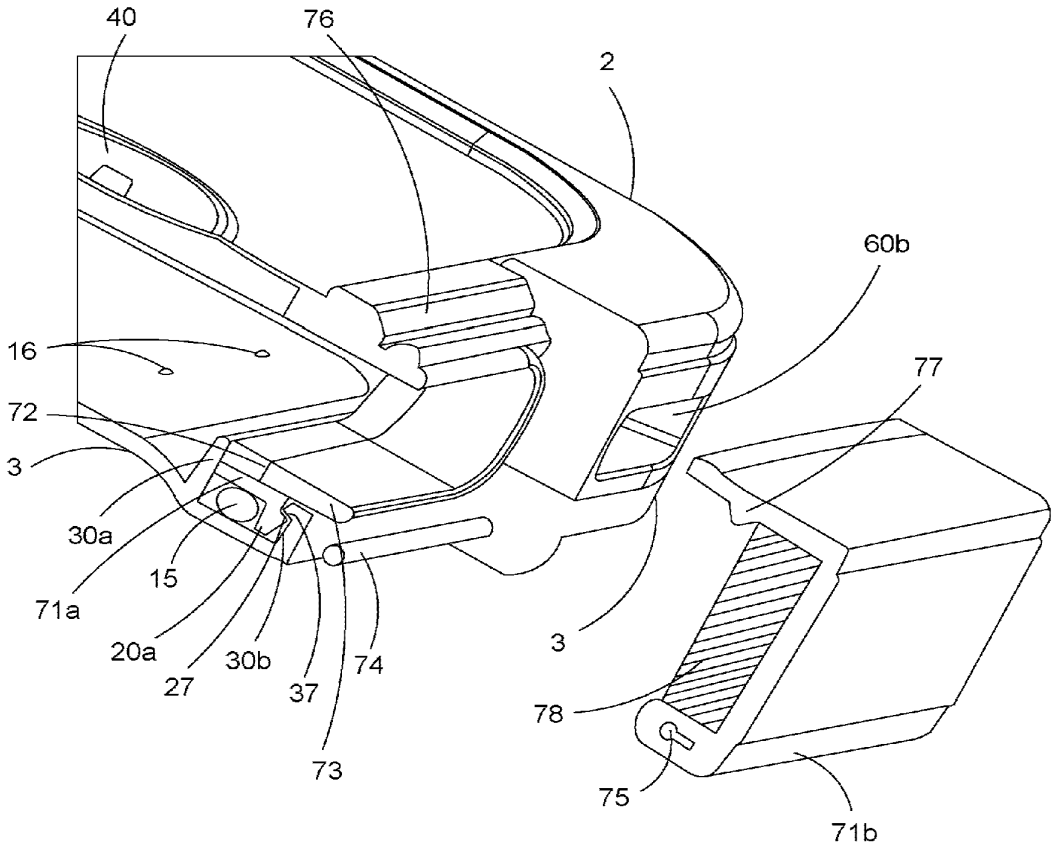

FIG. 9H

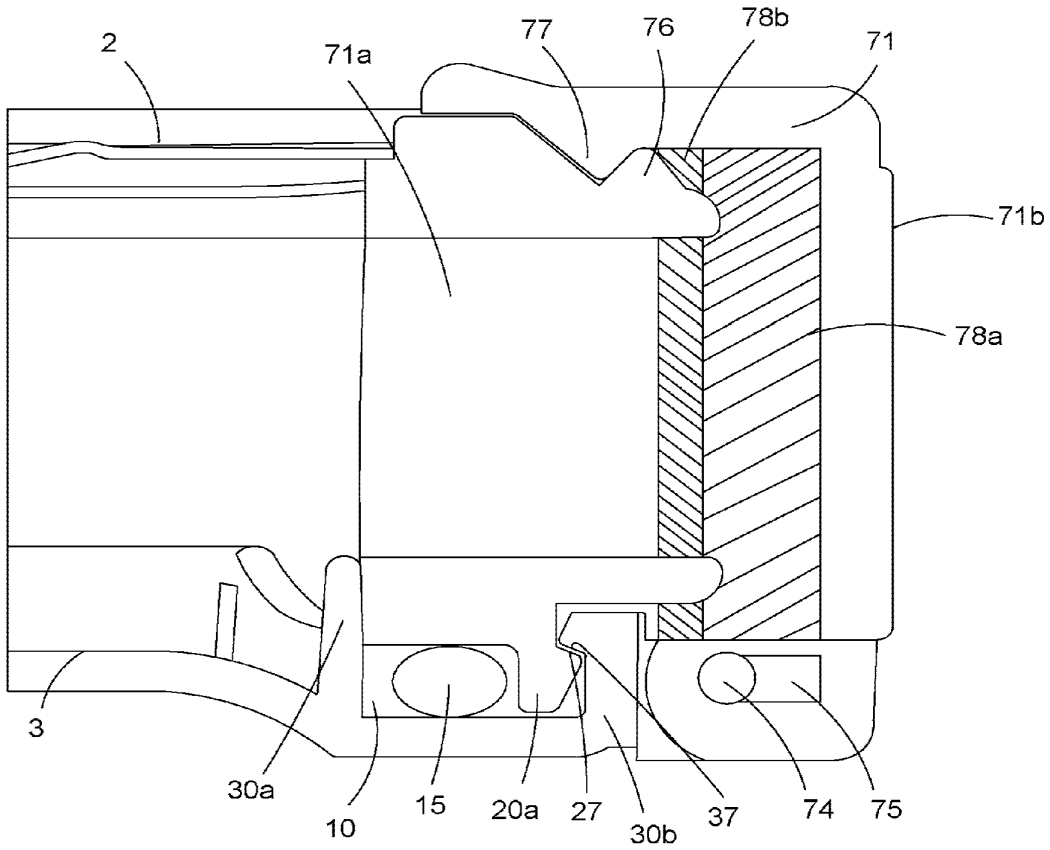

FIG. 9I

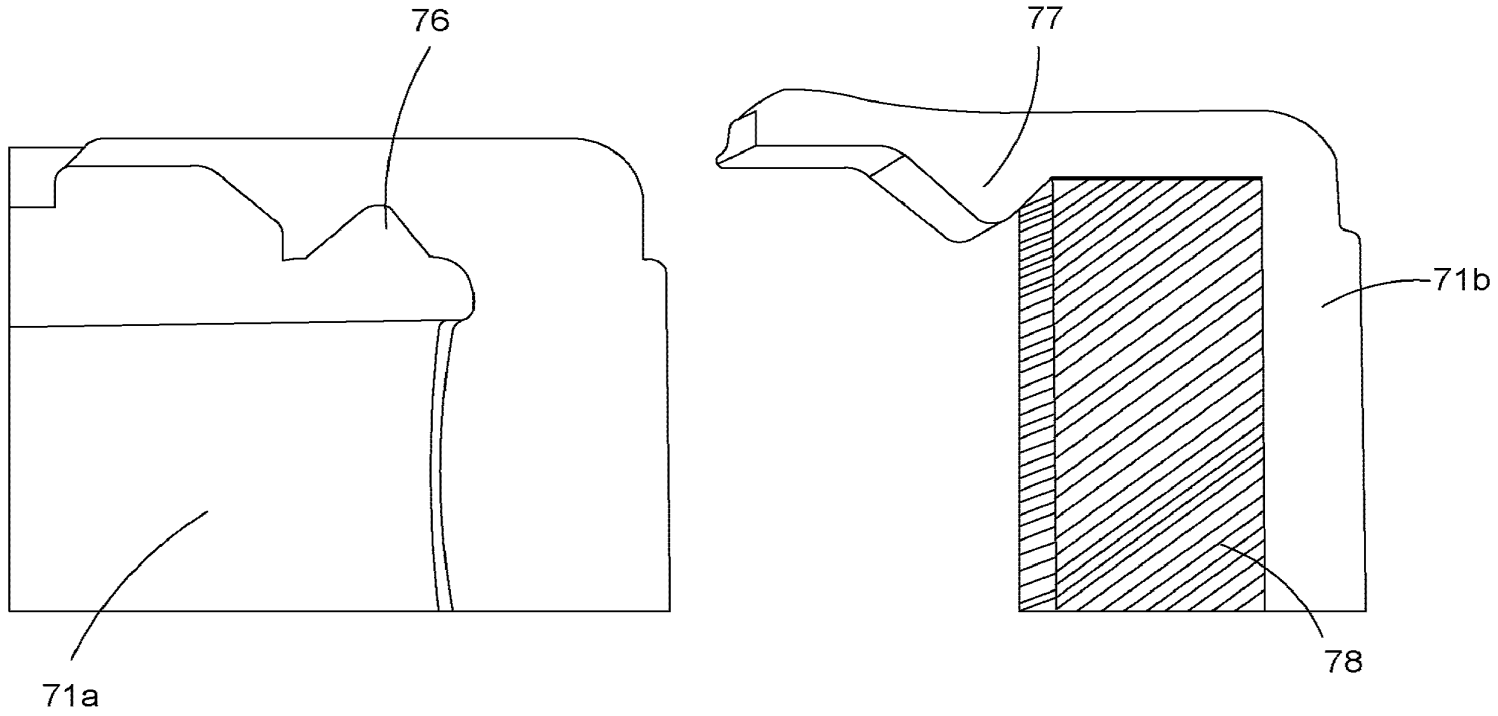

FIG. 9J

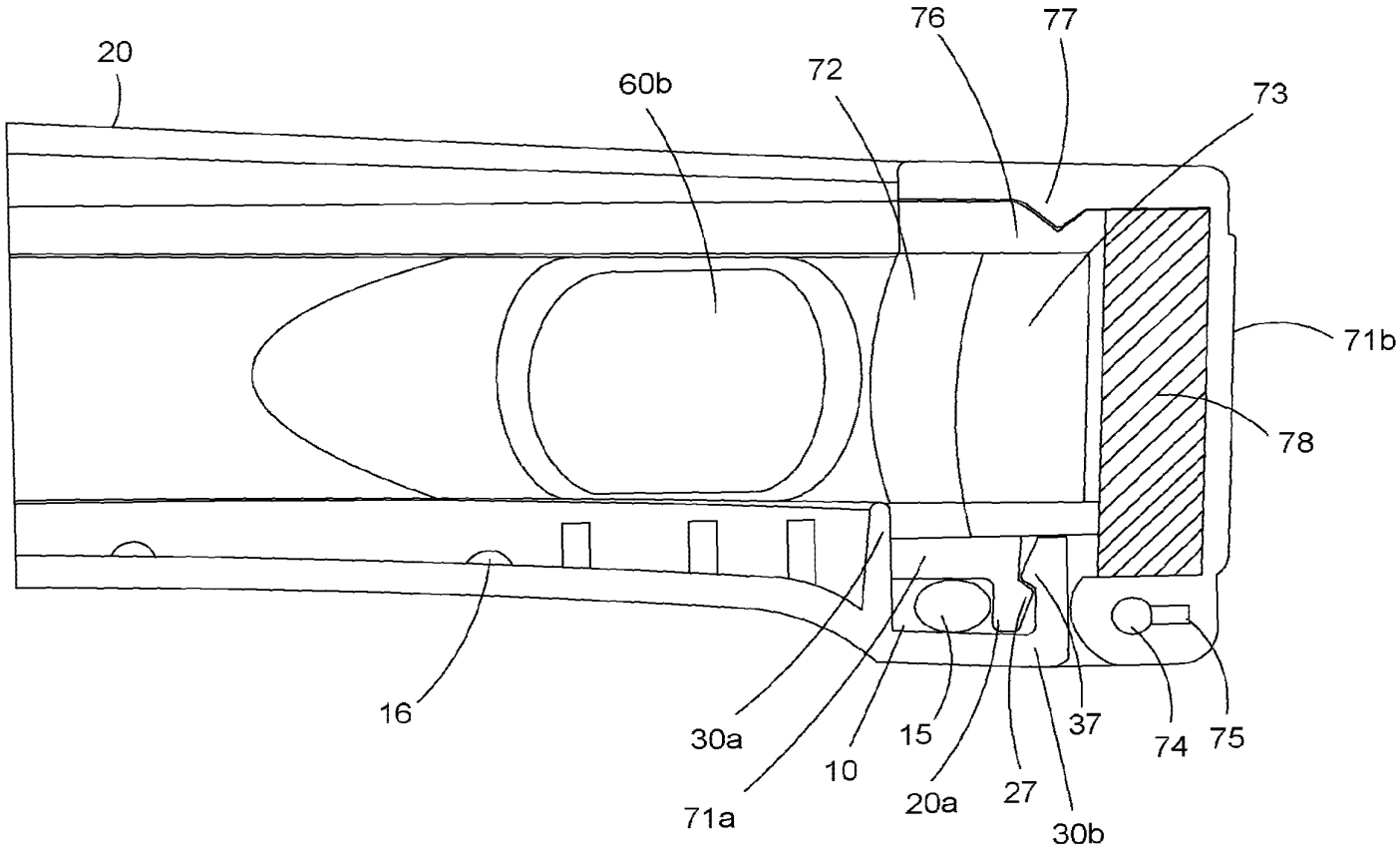

FIG. 9K

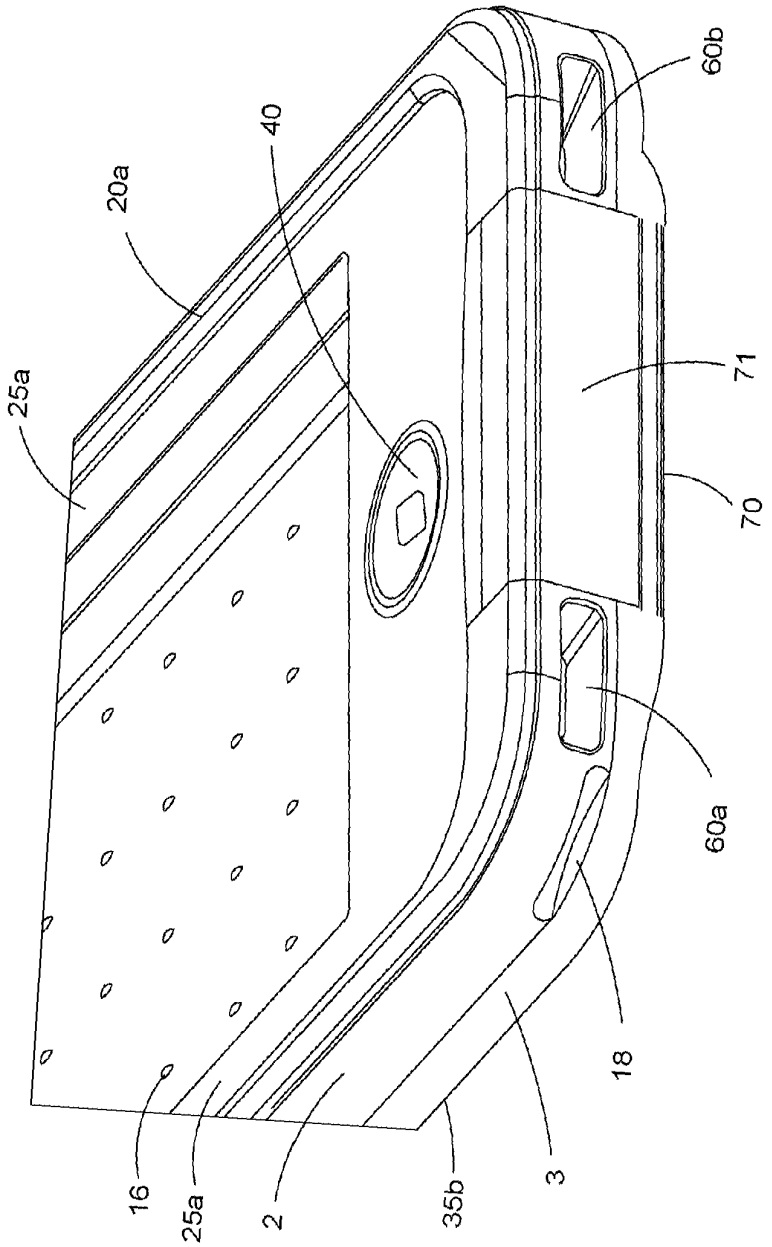

FIG. 10A

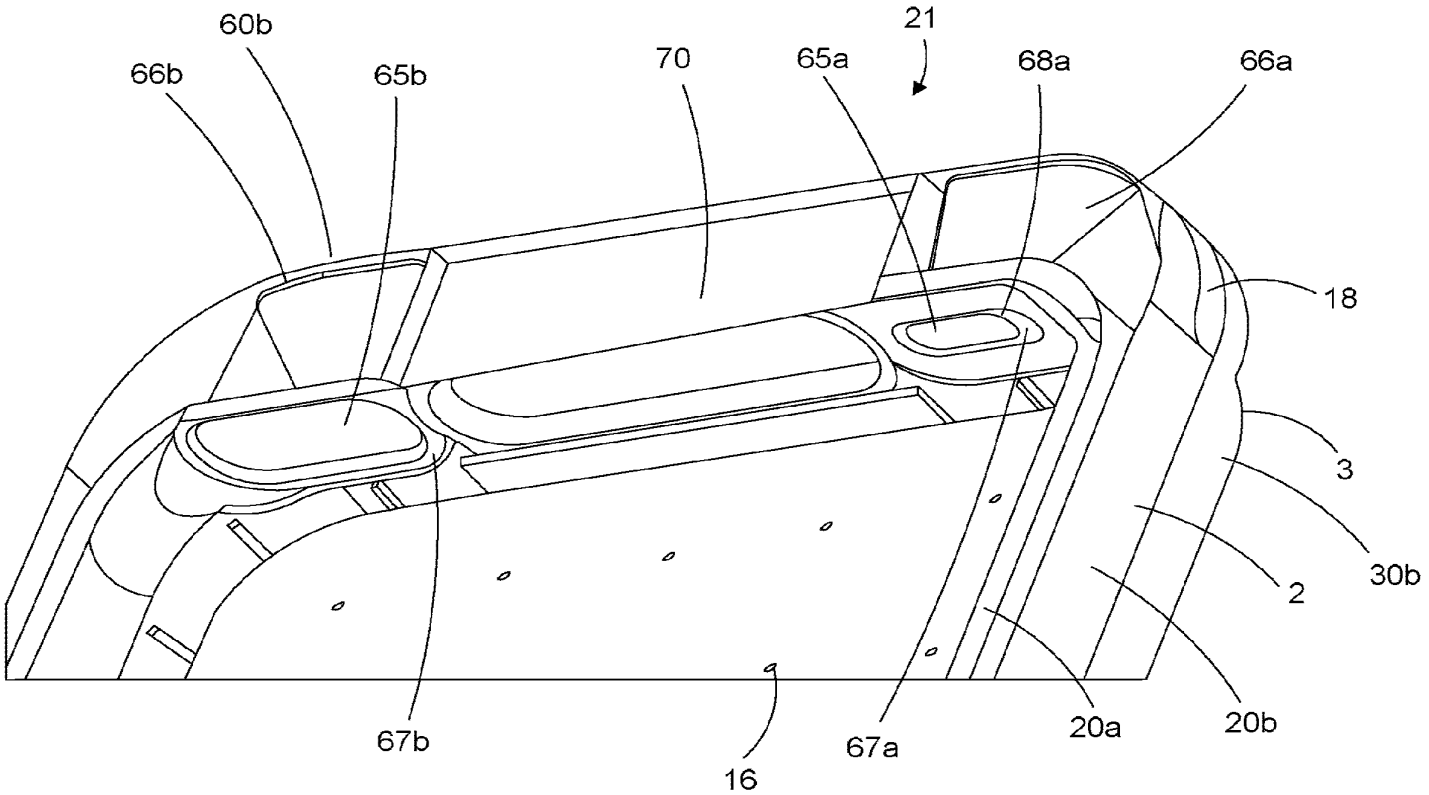

FIG. 10B

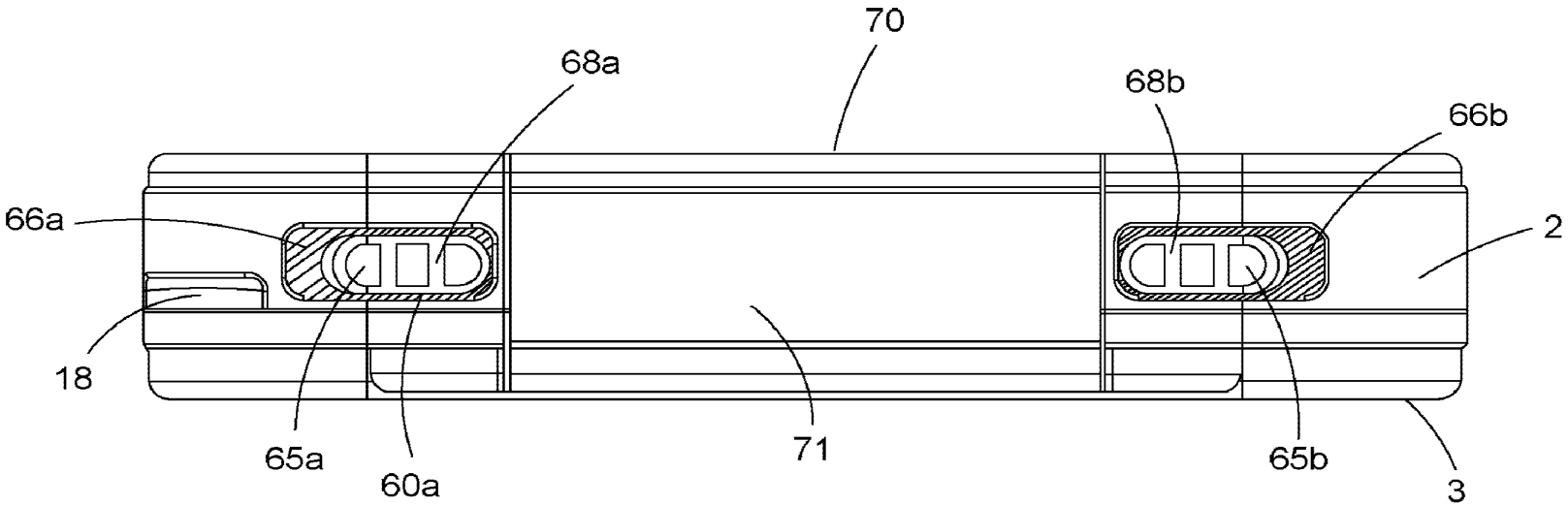

FIG. 10C

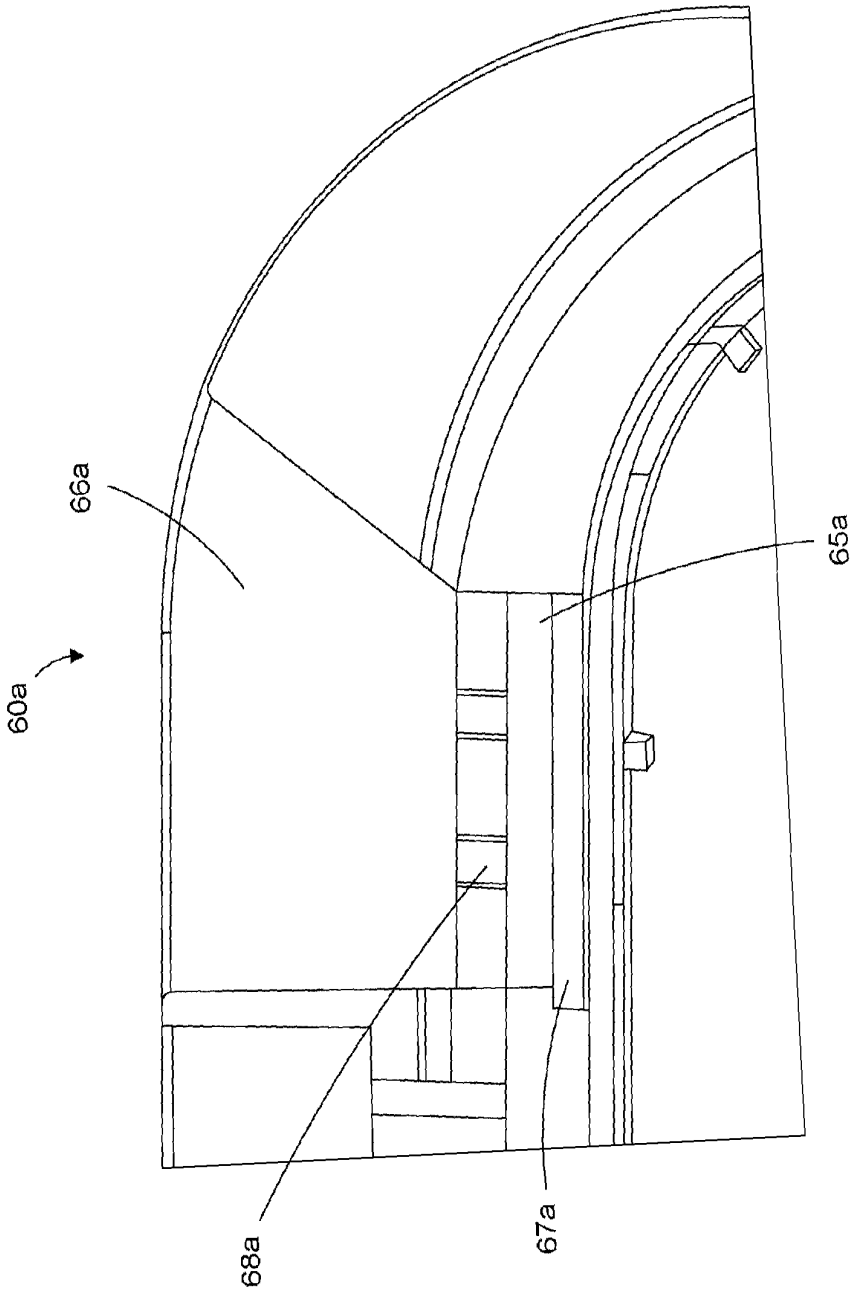

FIG. 10D

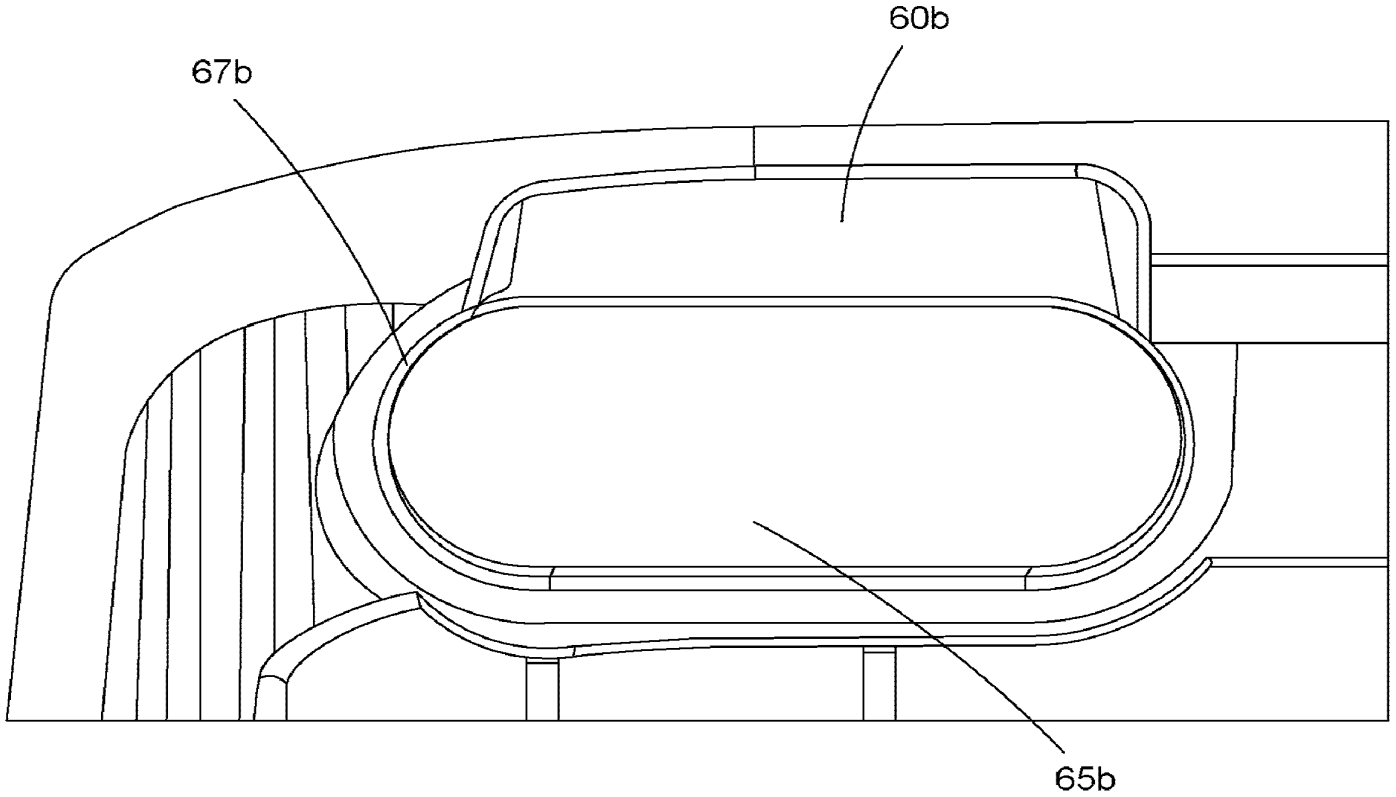

FIG. 10E

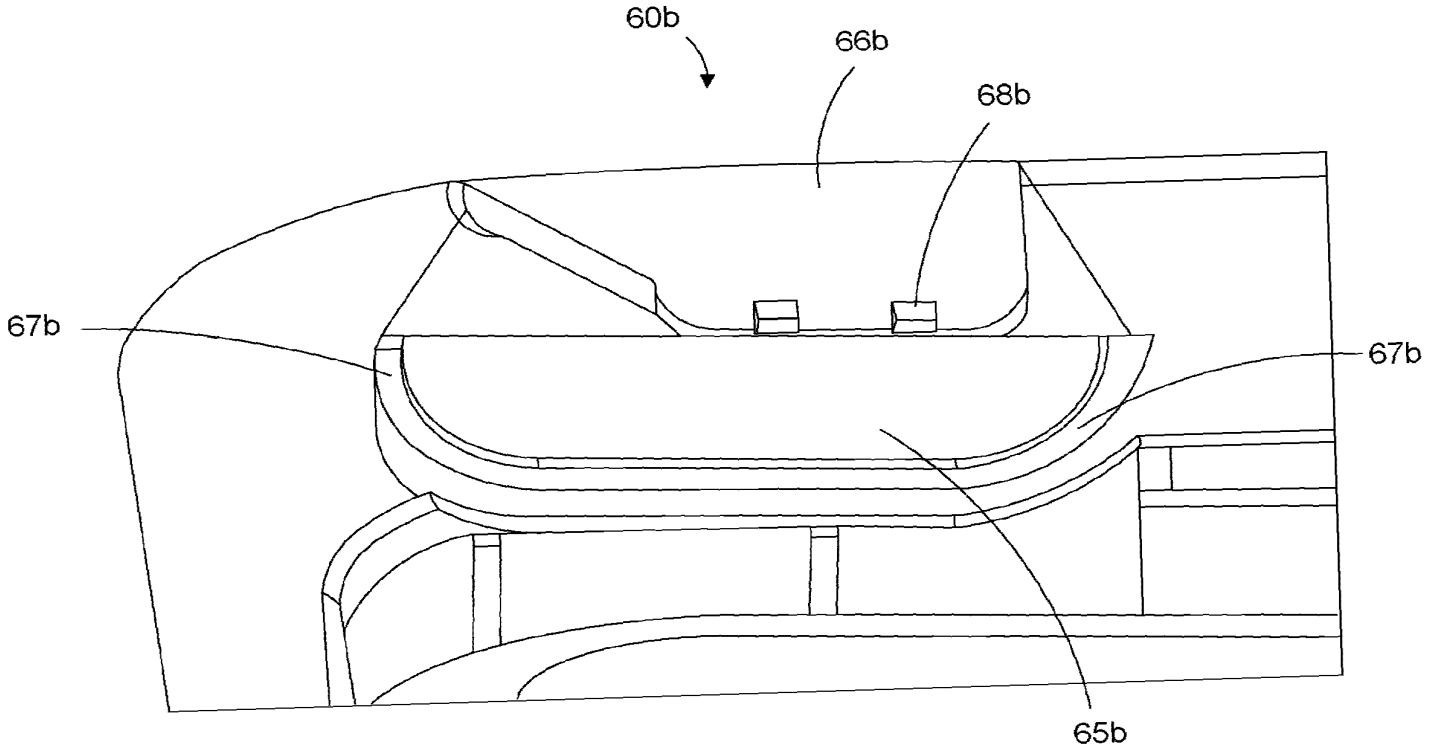

FIG. 10F

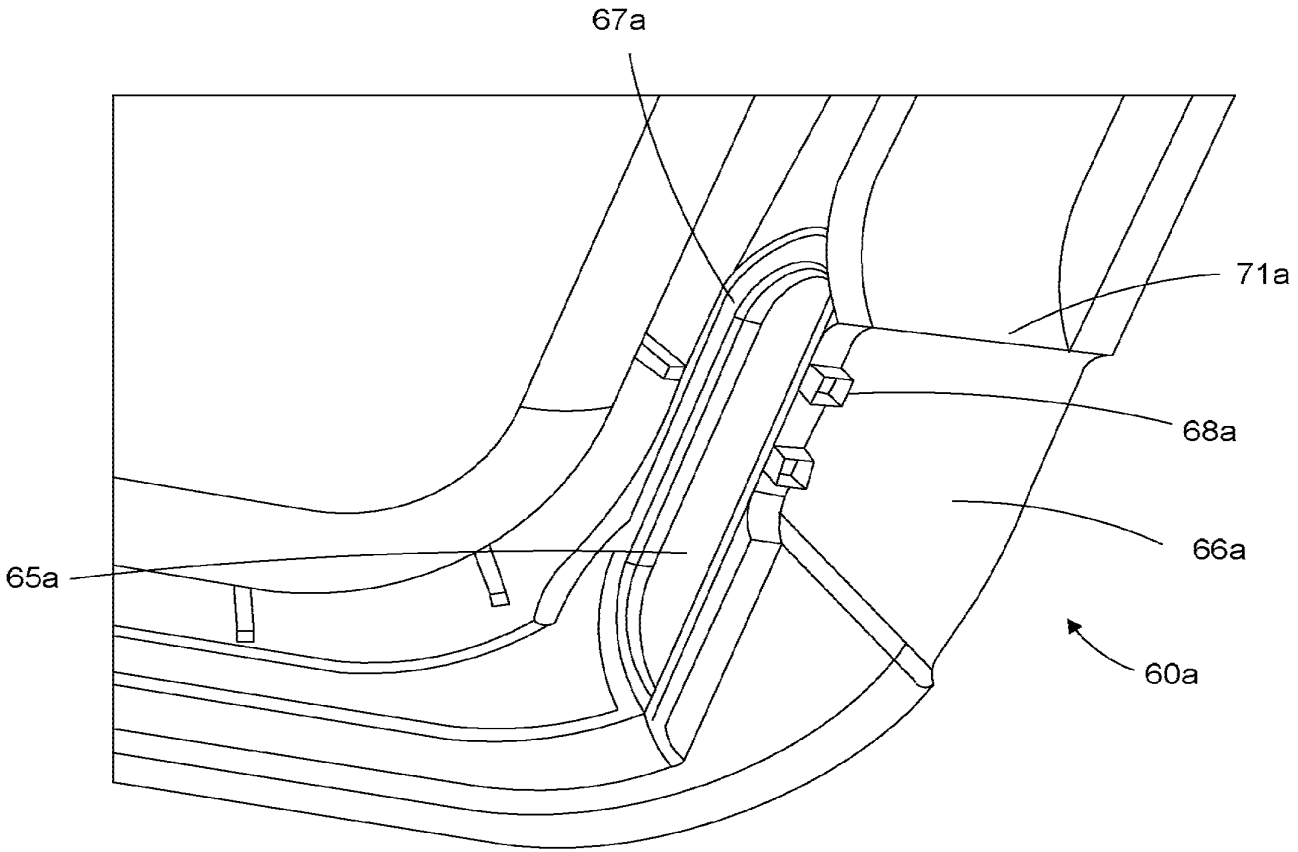

FIG. 10G

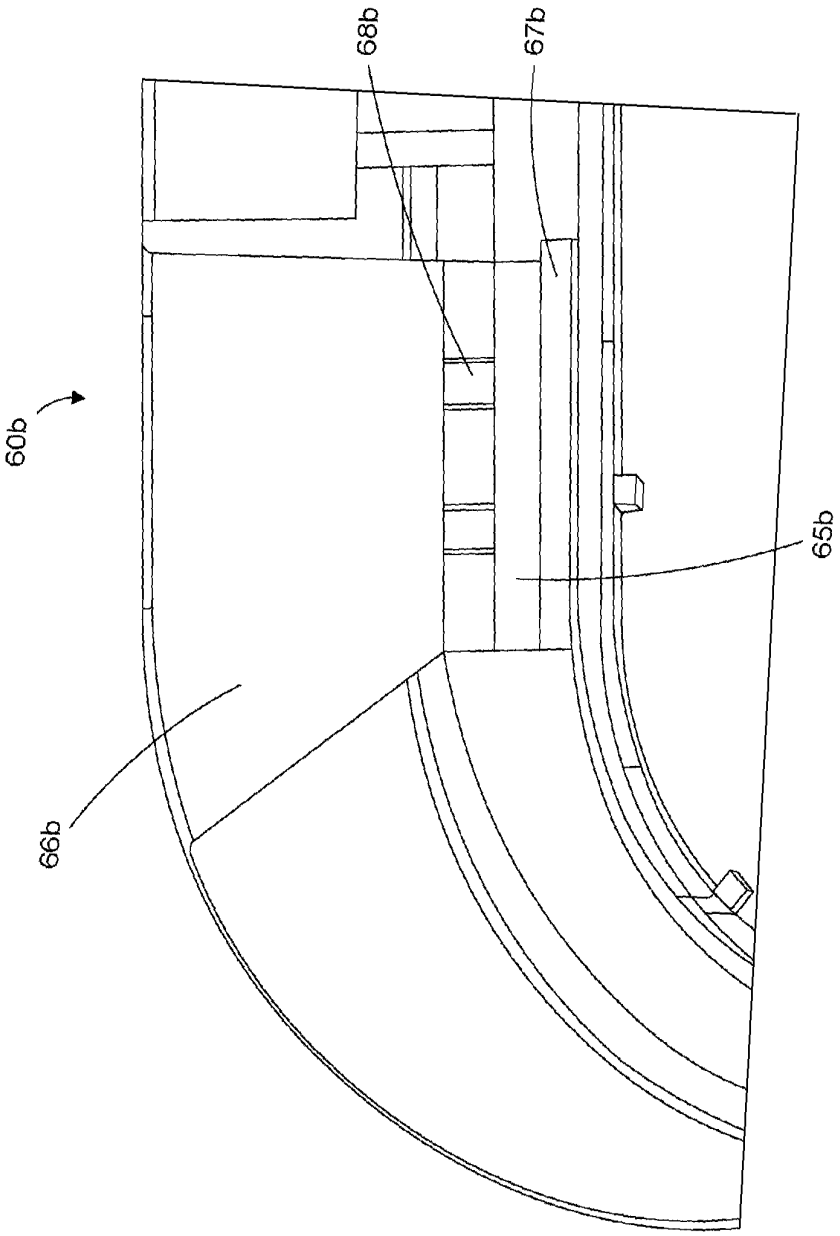

FIG. 10H

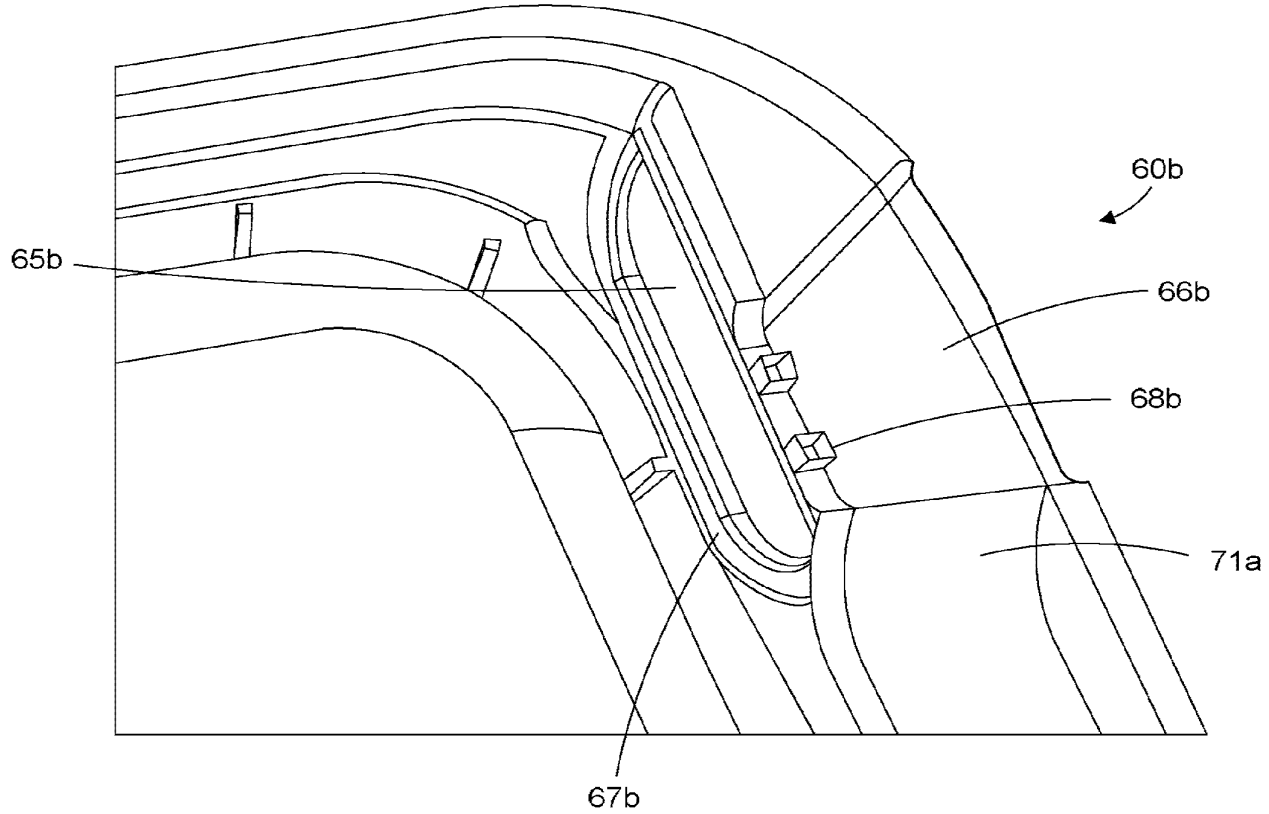

FIG. 10I

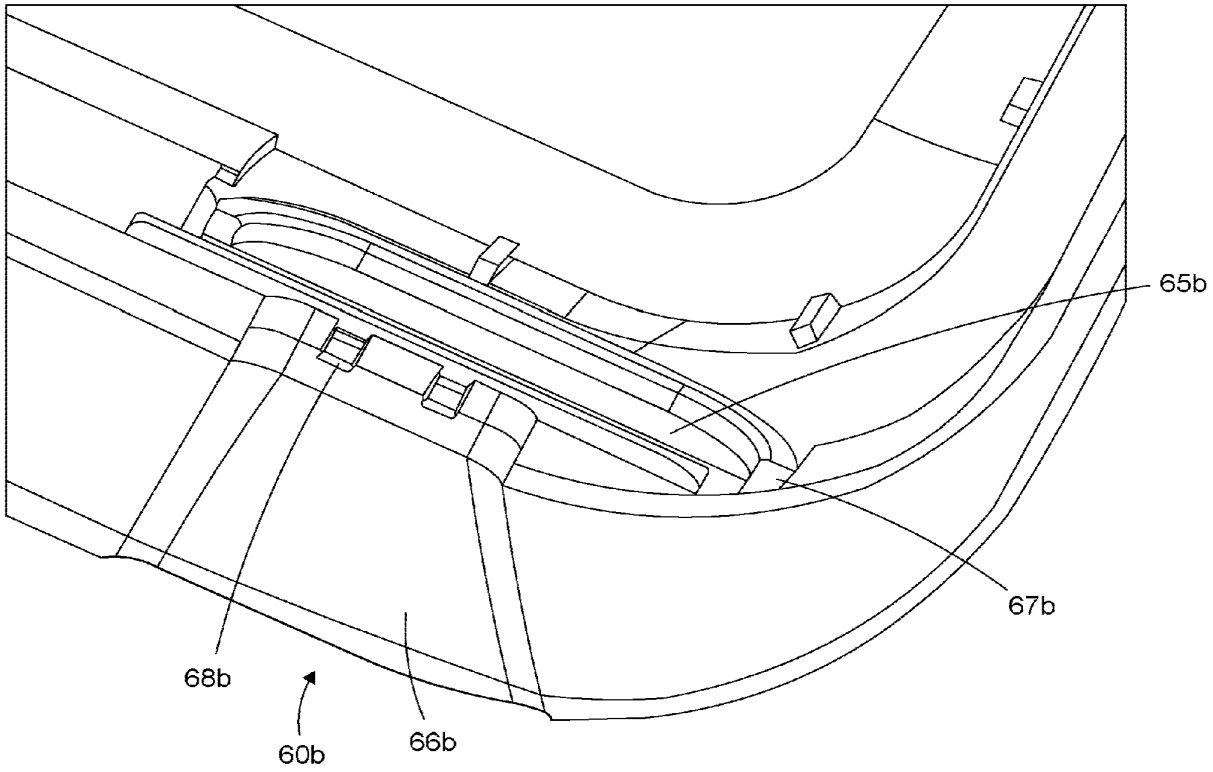

FIG. 10J

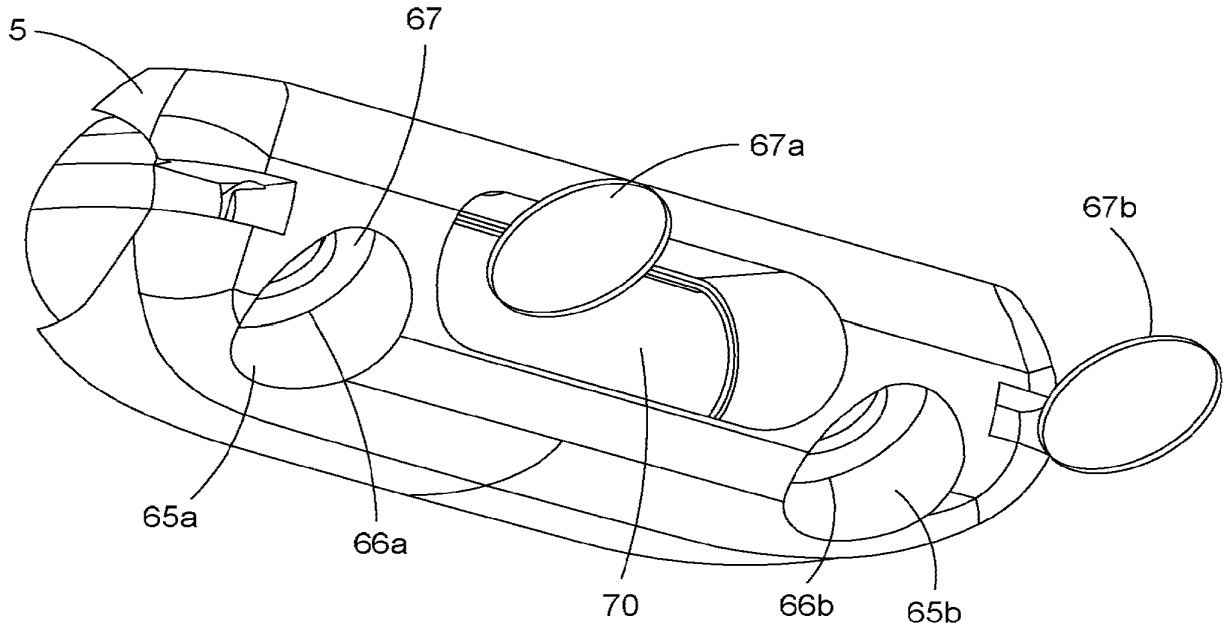

FIG. 10K

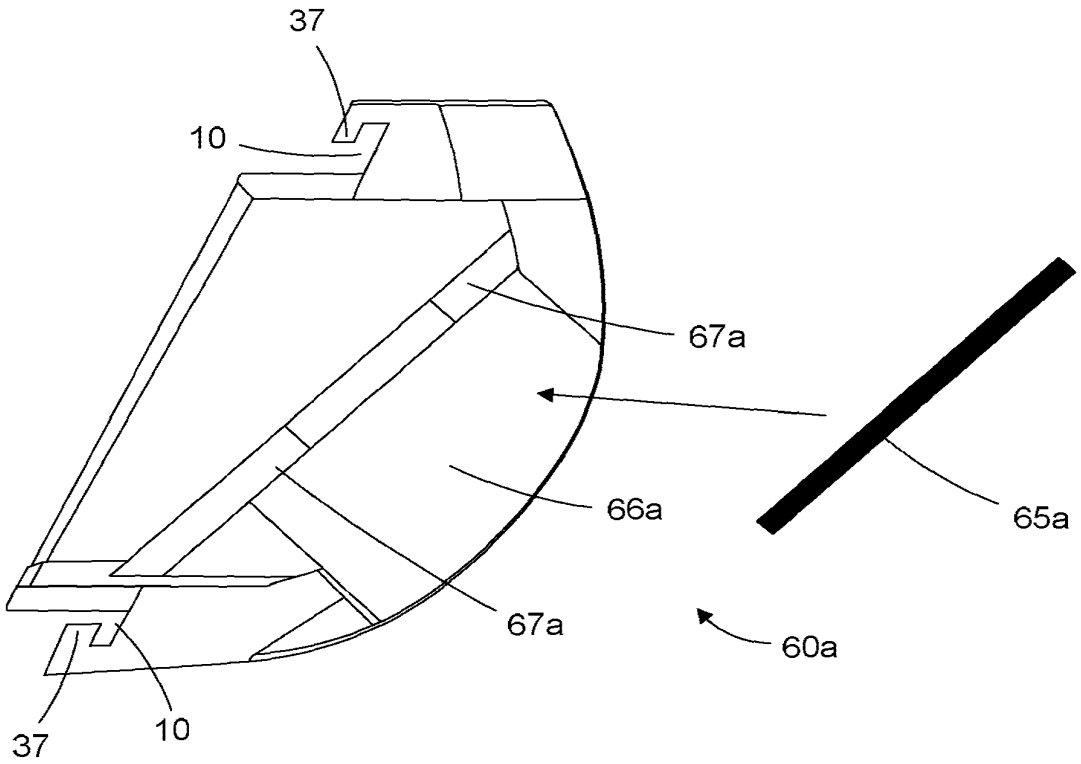

FIG. 10L

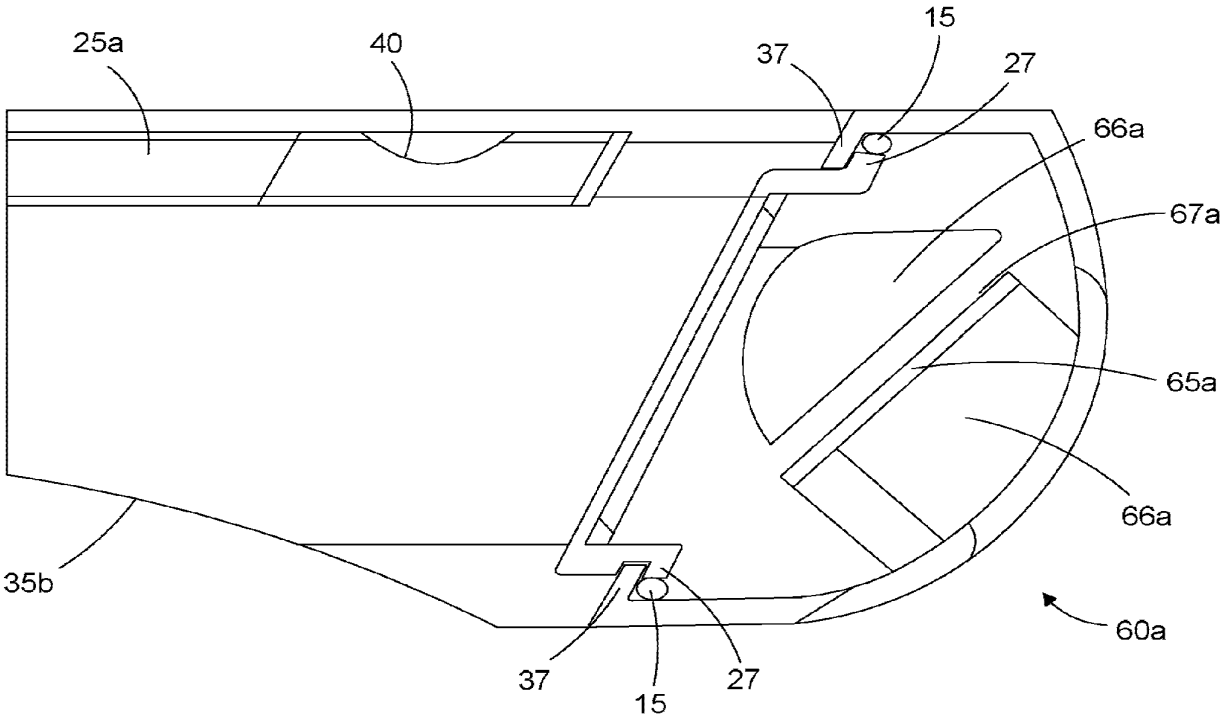

FIG. 10M

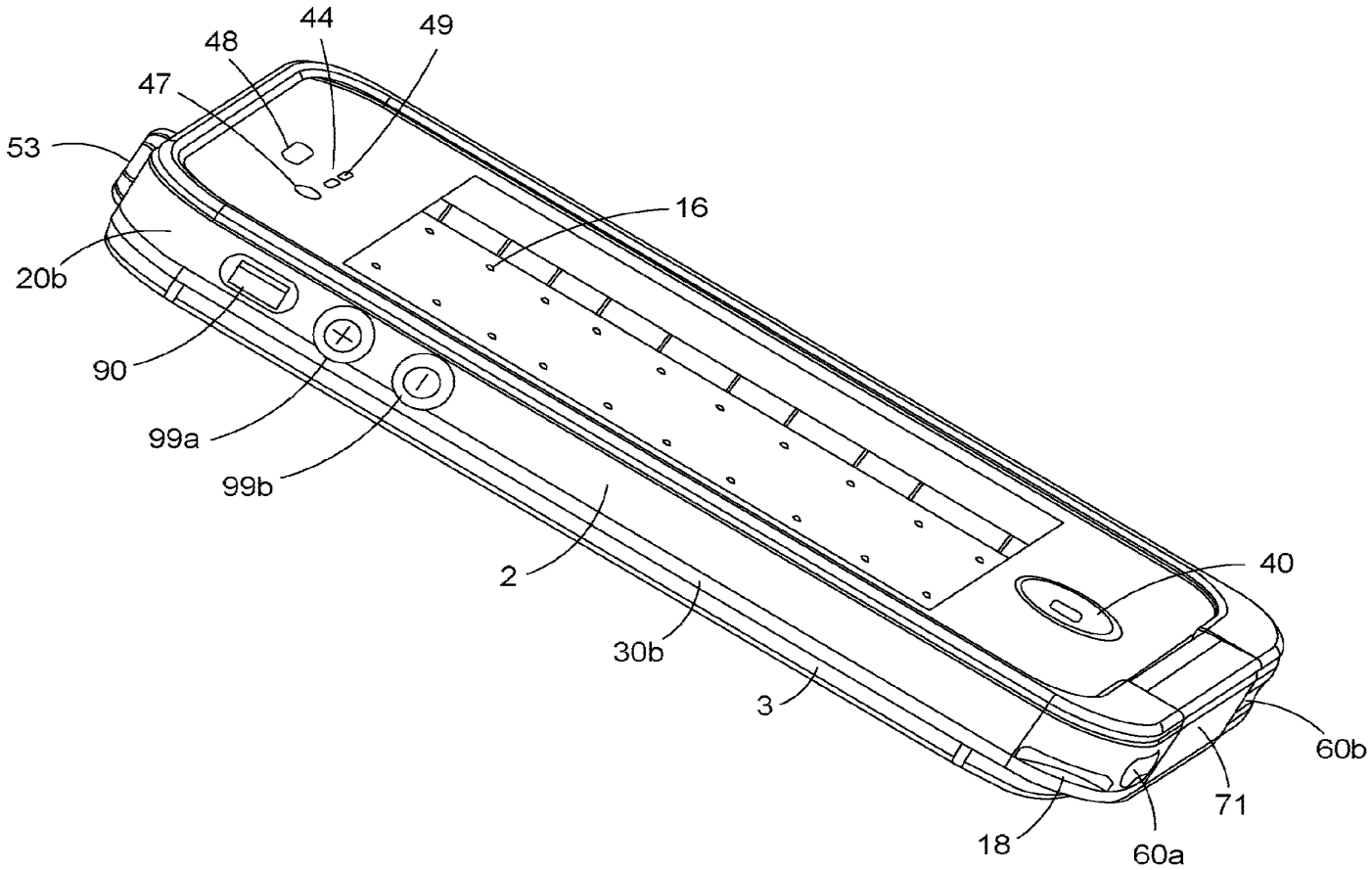

FIG. 11A

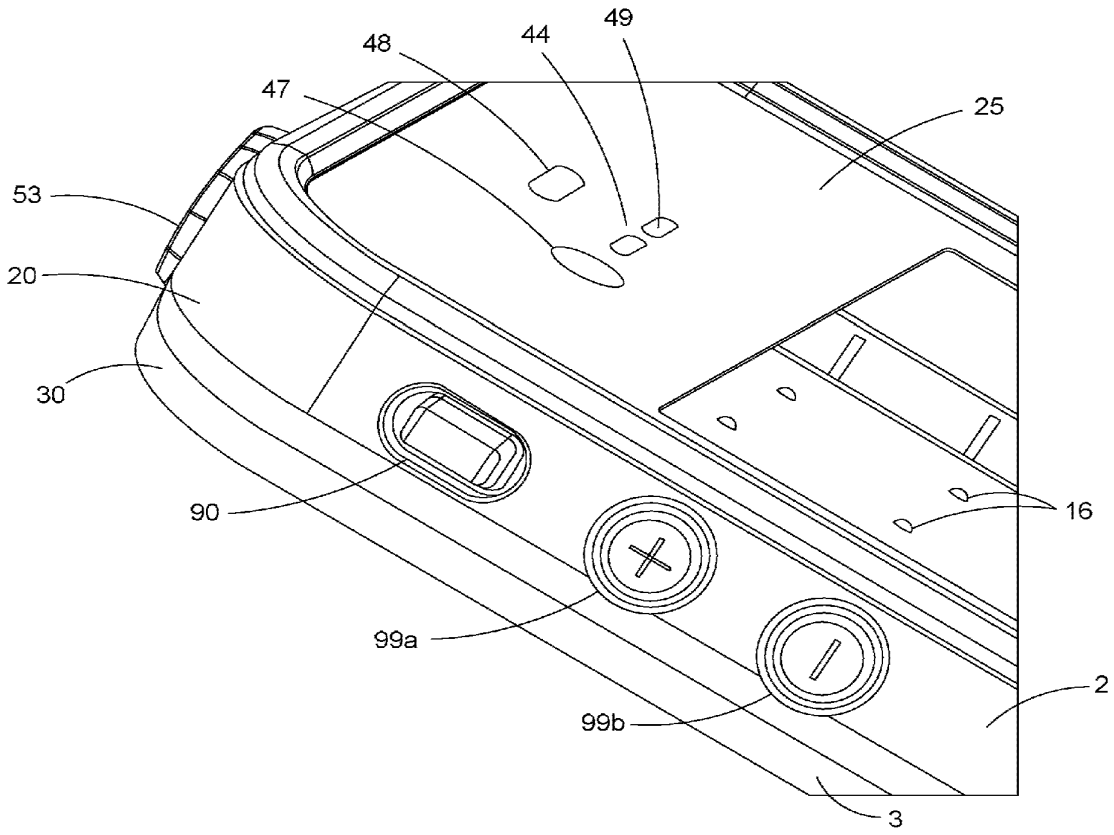

FIG. 11B

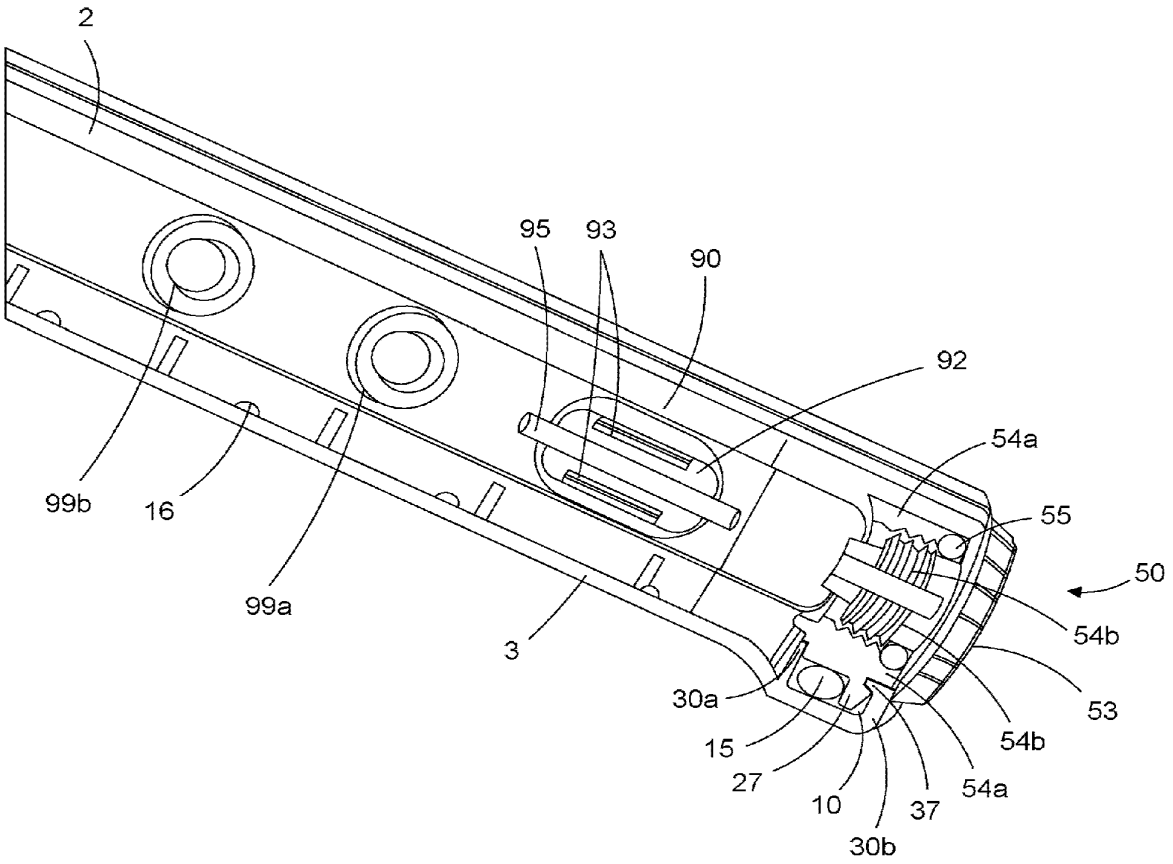
2
95
93
90
92
54a
55
50
54b
53
54b
54a
37
30b
10
27
15
30a
3
99a
16
99b

FIG. 11C

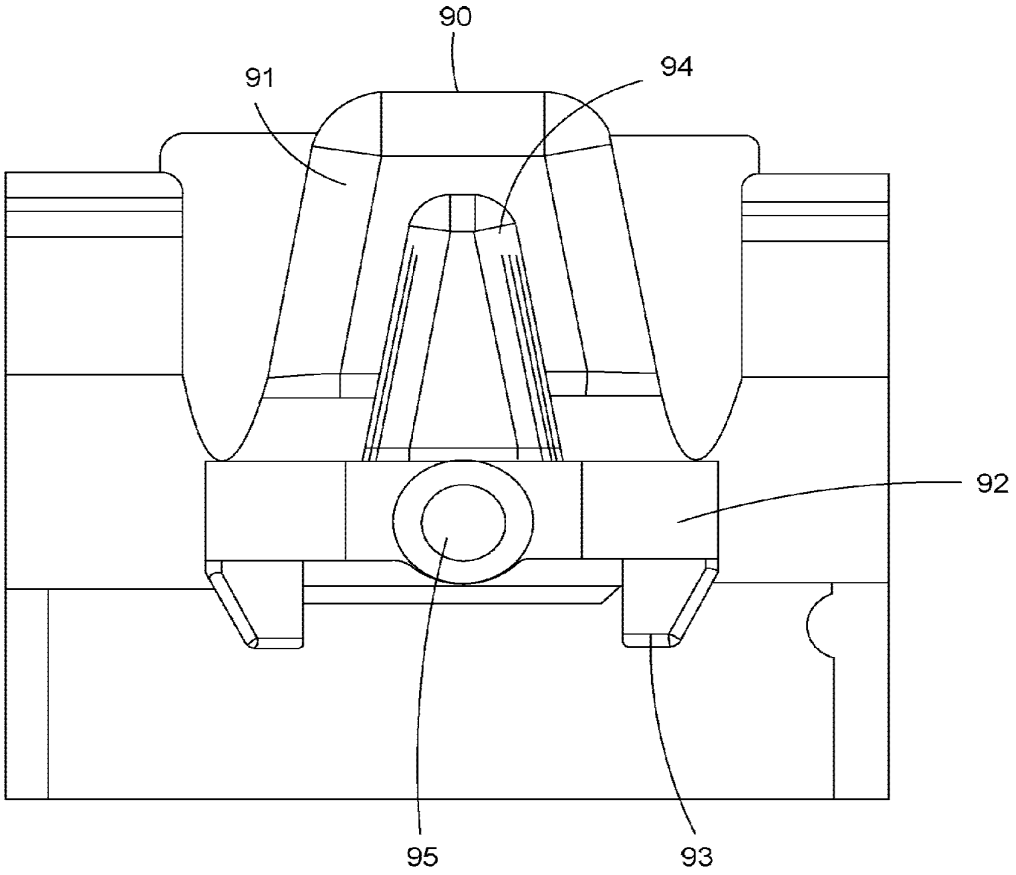

FIG. 11D

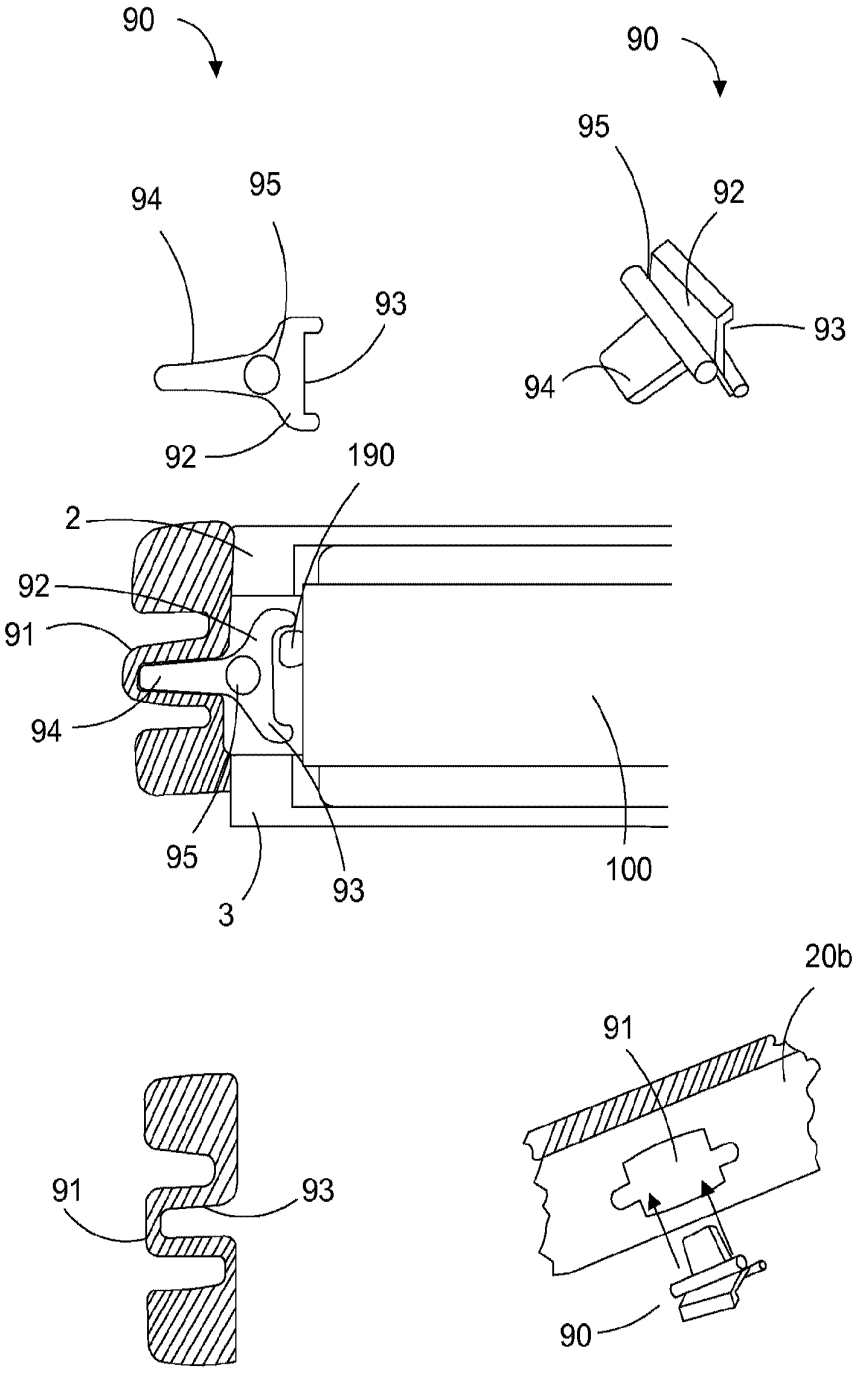

FIG. 11E

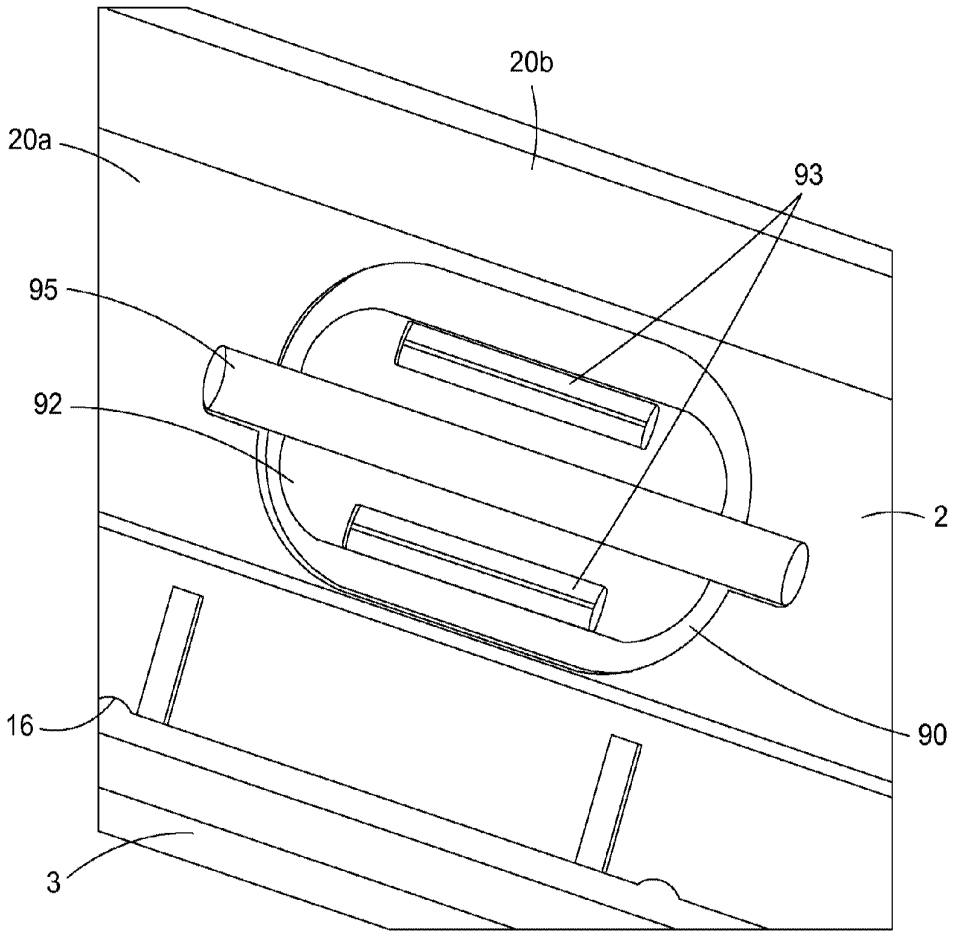

FIG. 11F

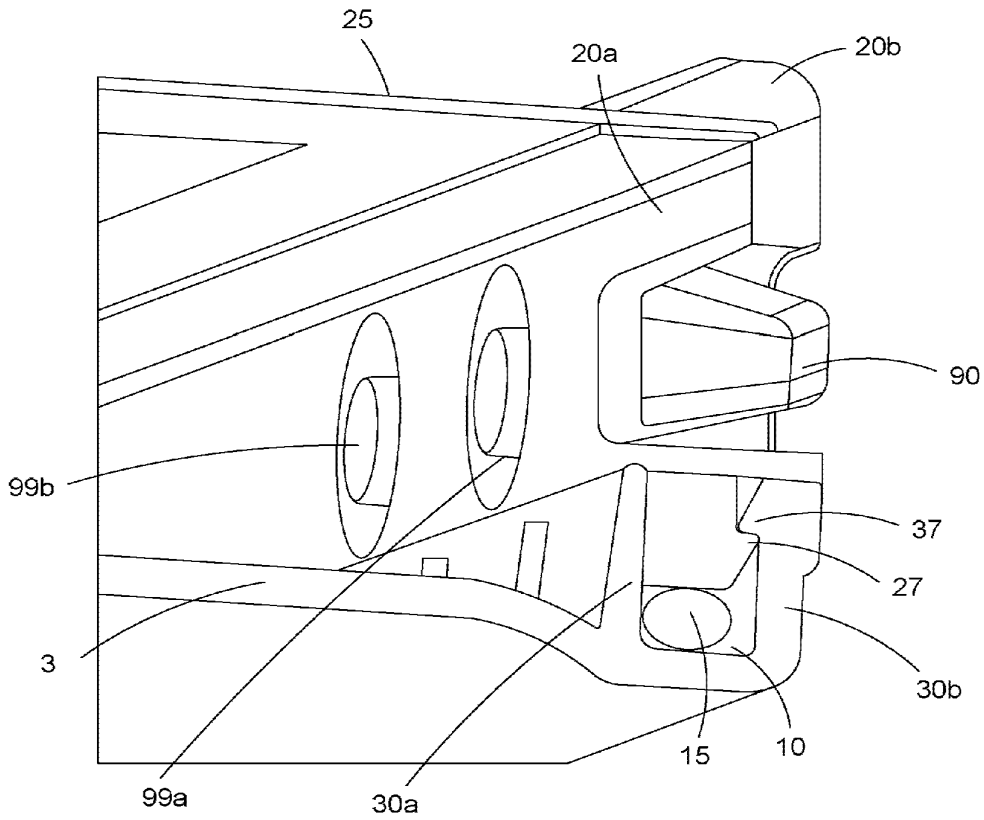

FIG. 11G

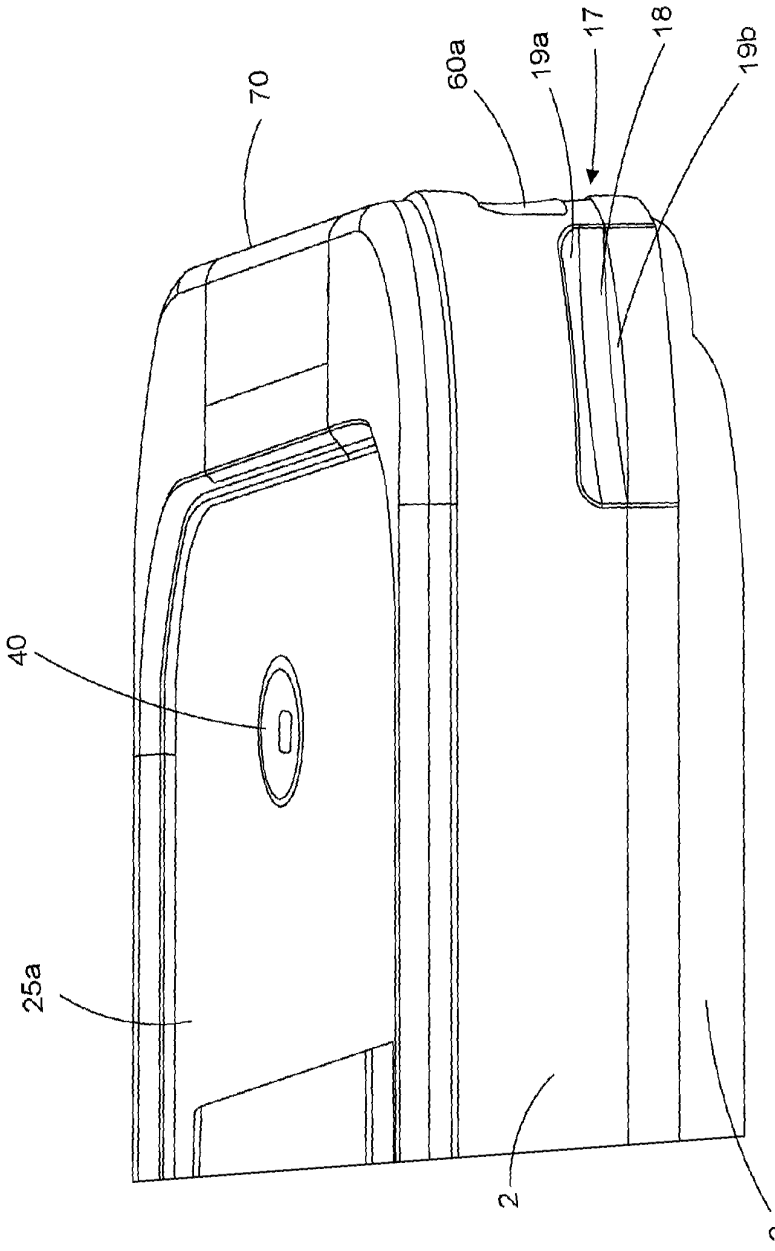

FIG. 12A

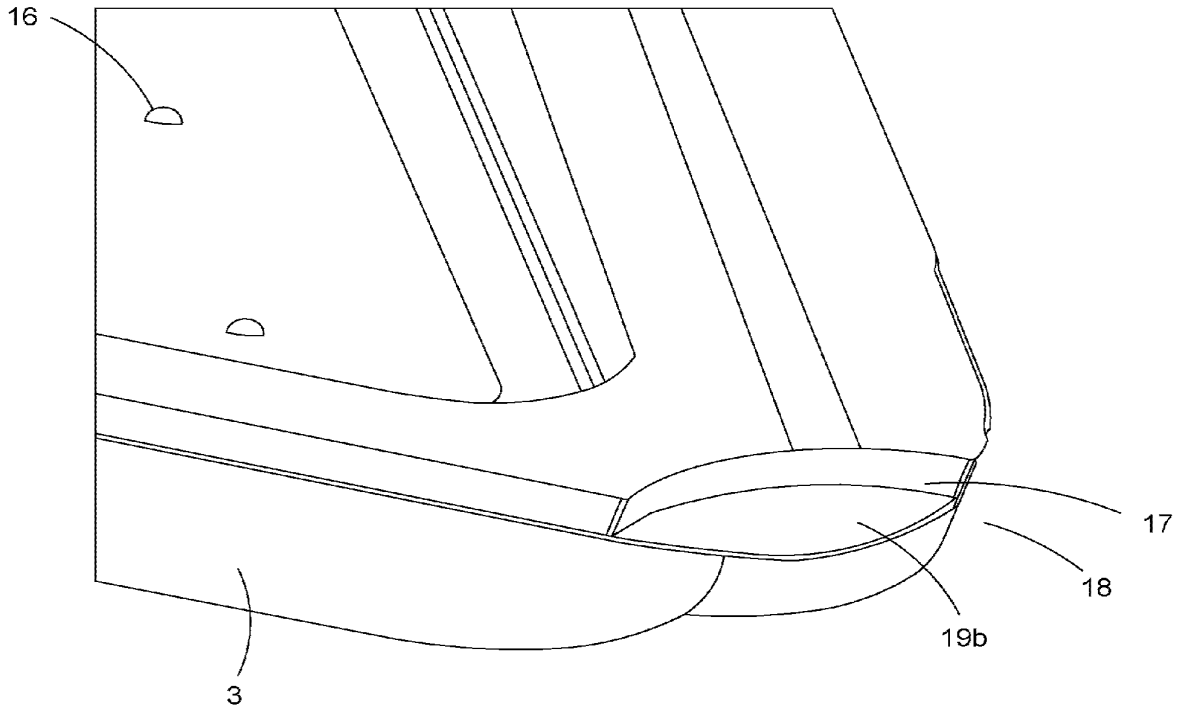

FIG. 12B

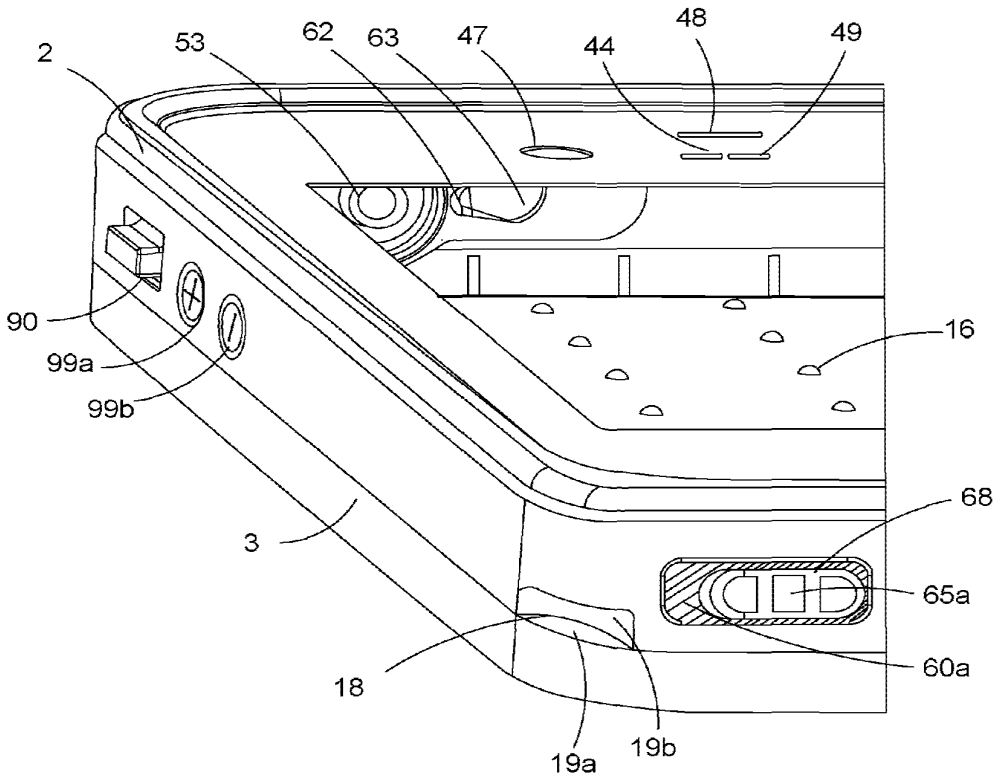

FIG. 12C

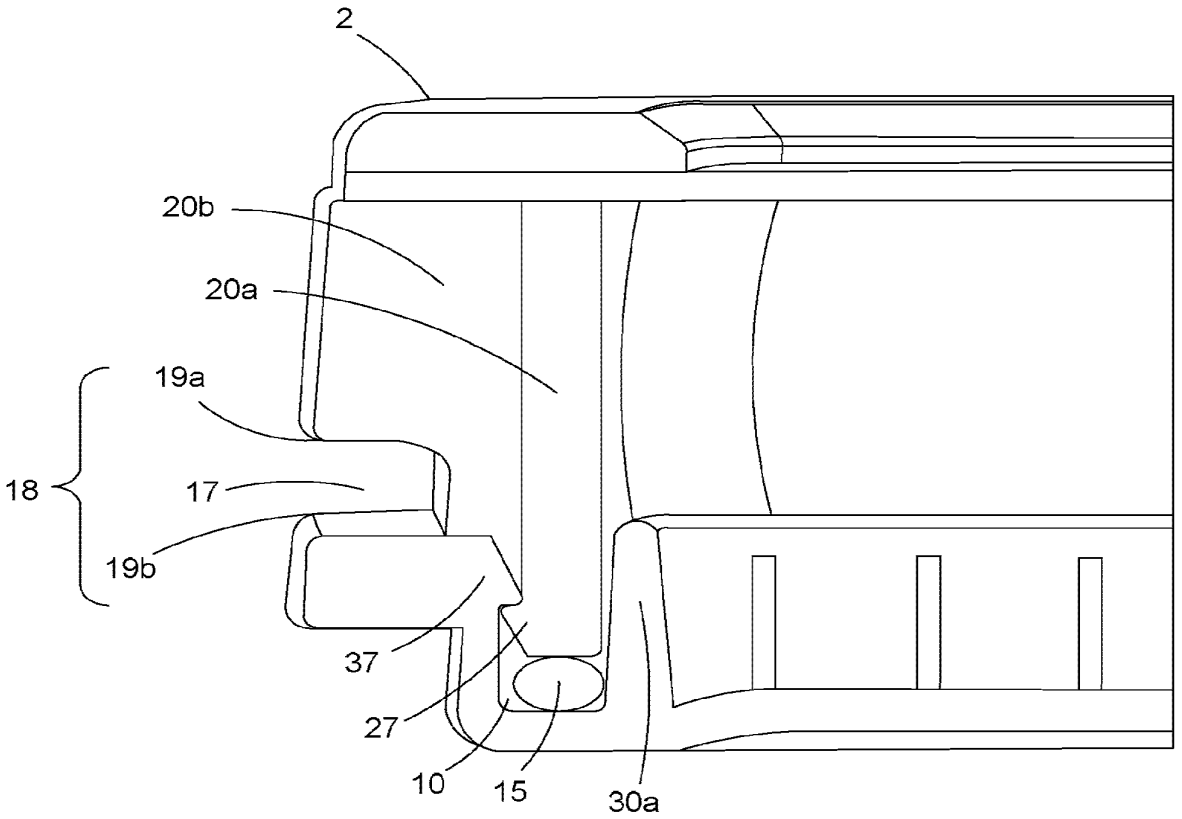

FIG. 12D

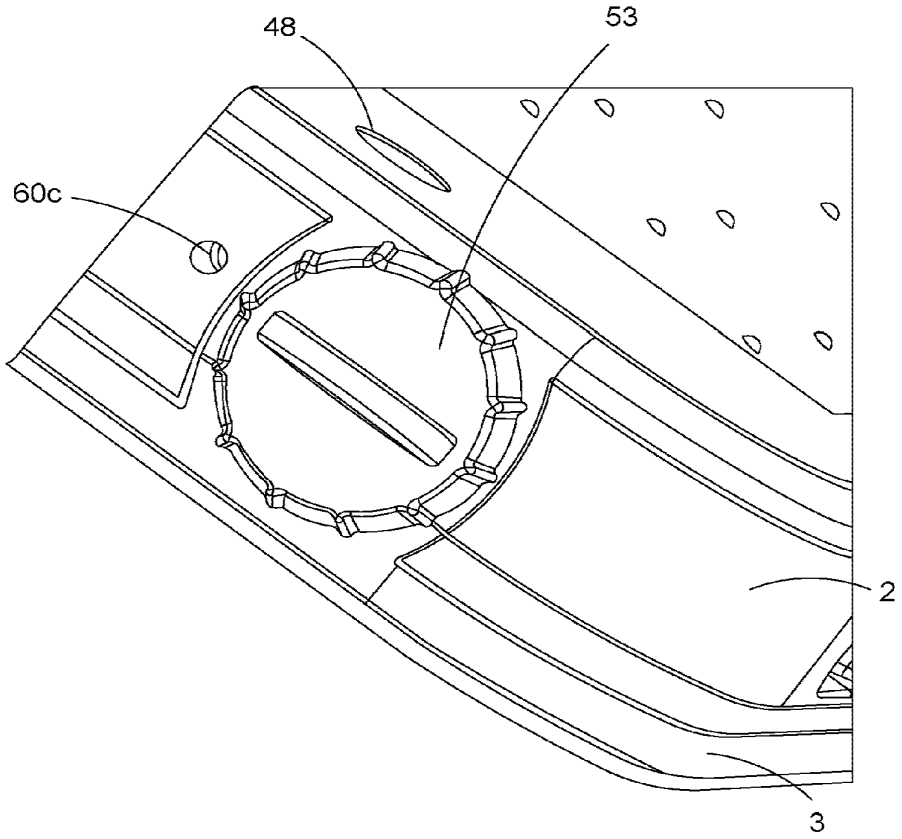

FIG. 13A

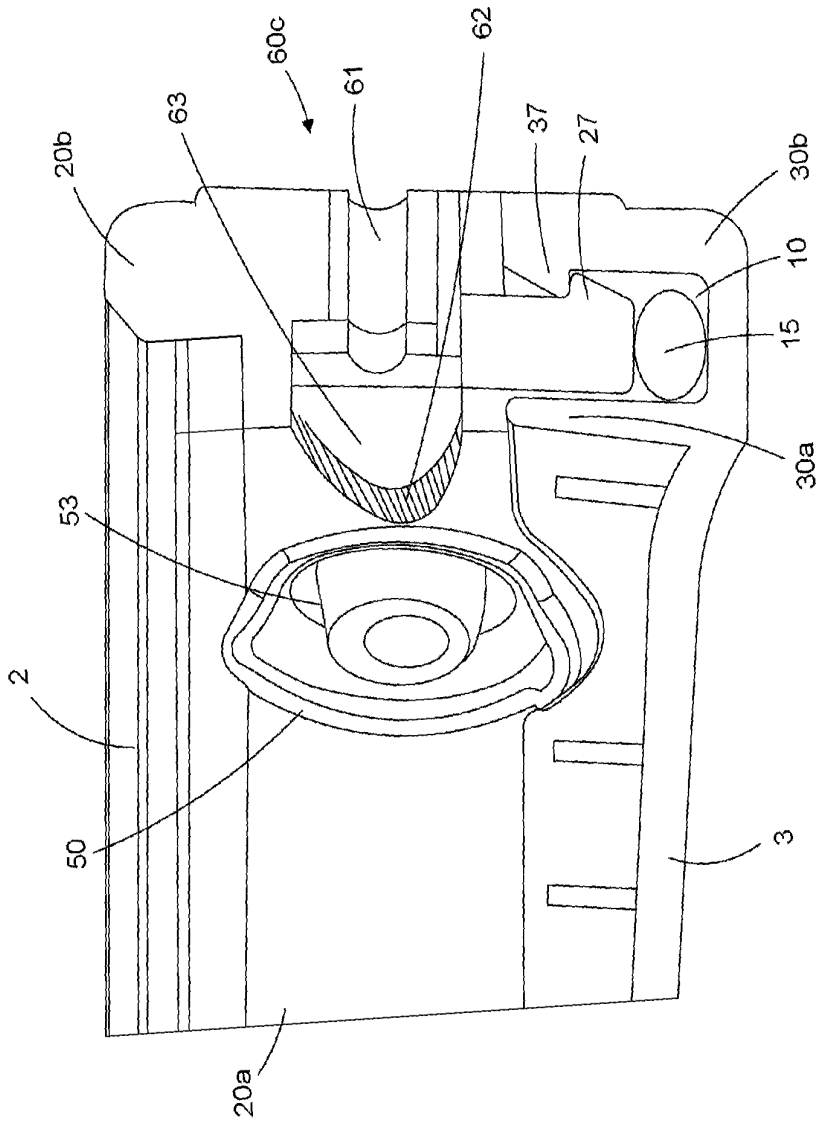

FIG. 13B

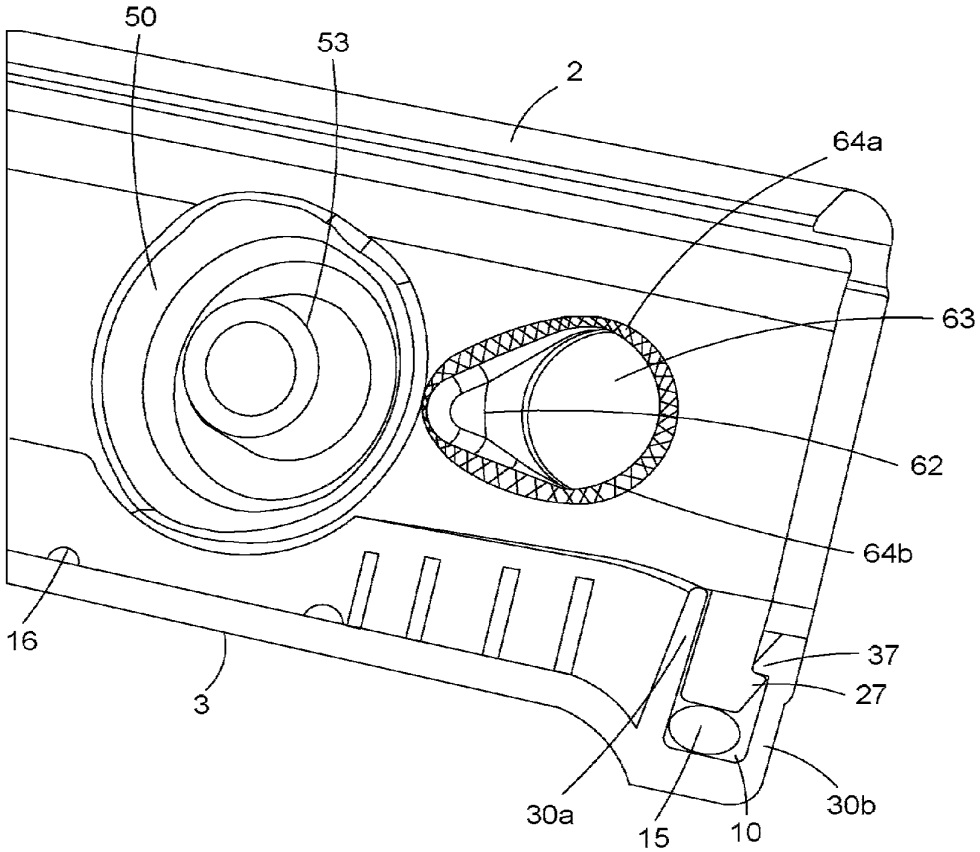

FIG. 13C

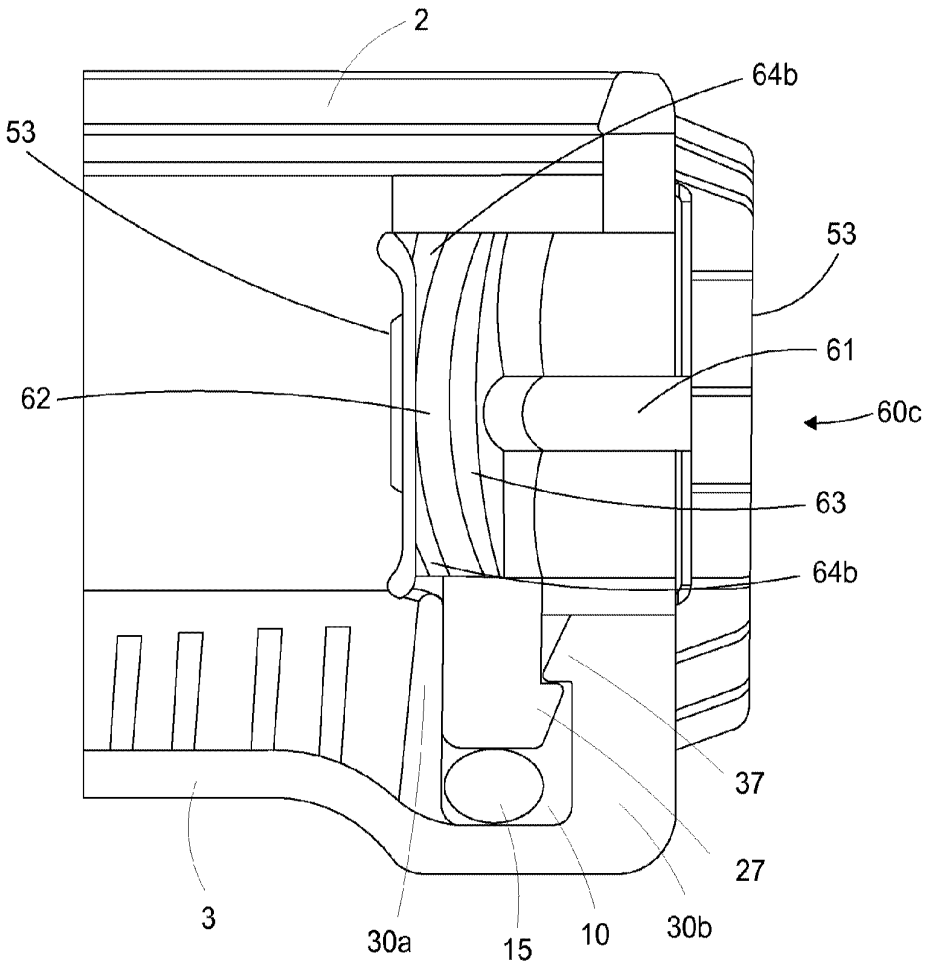

FIG. 13D

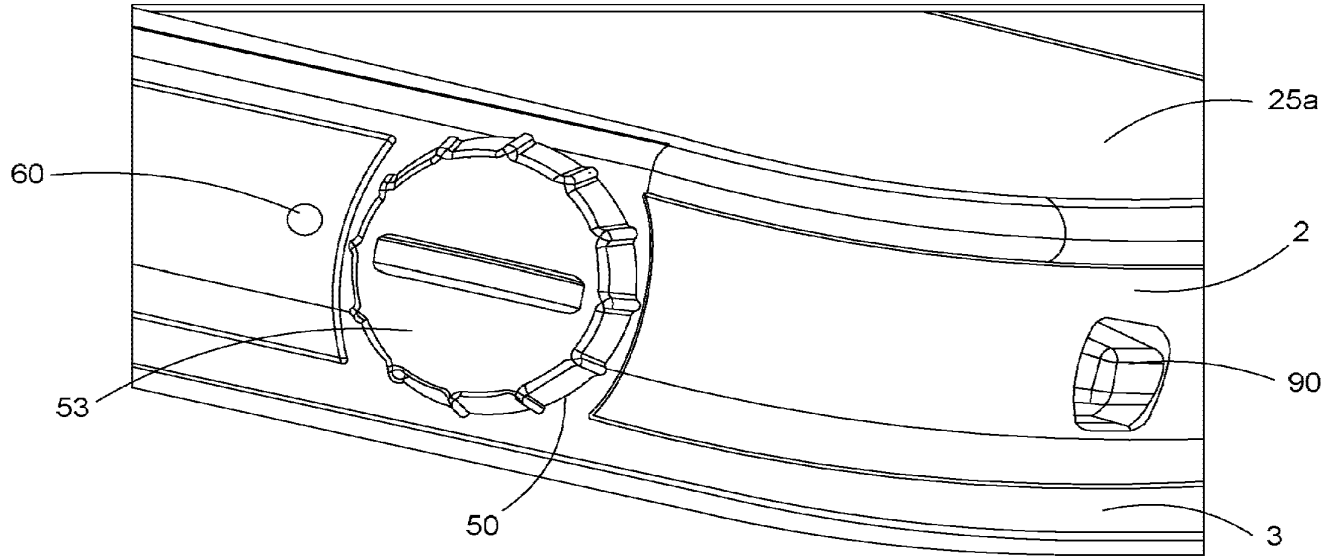

FIG. 14A

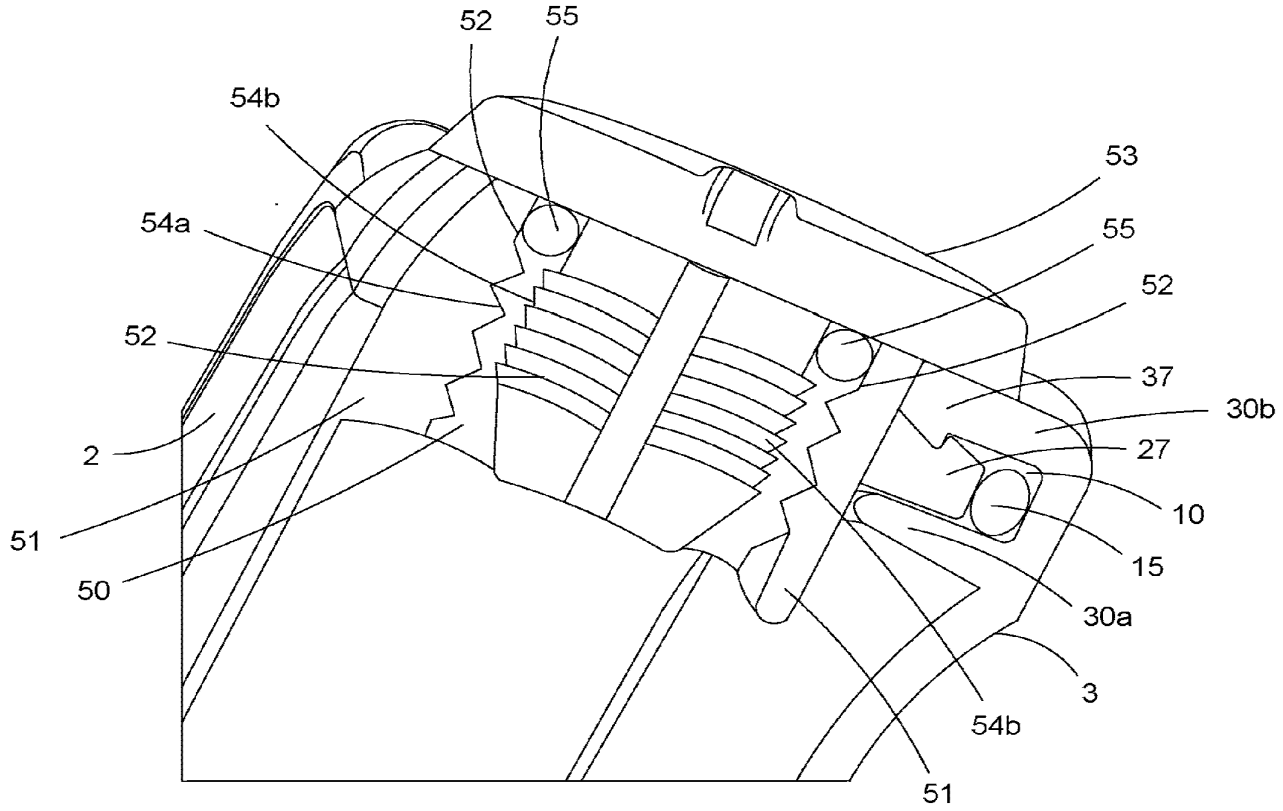

FIG. 14B

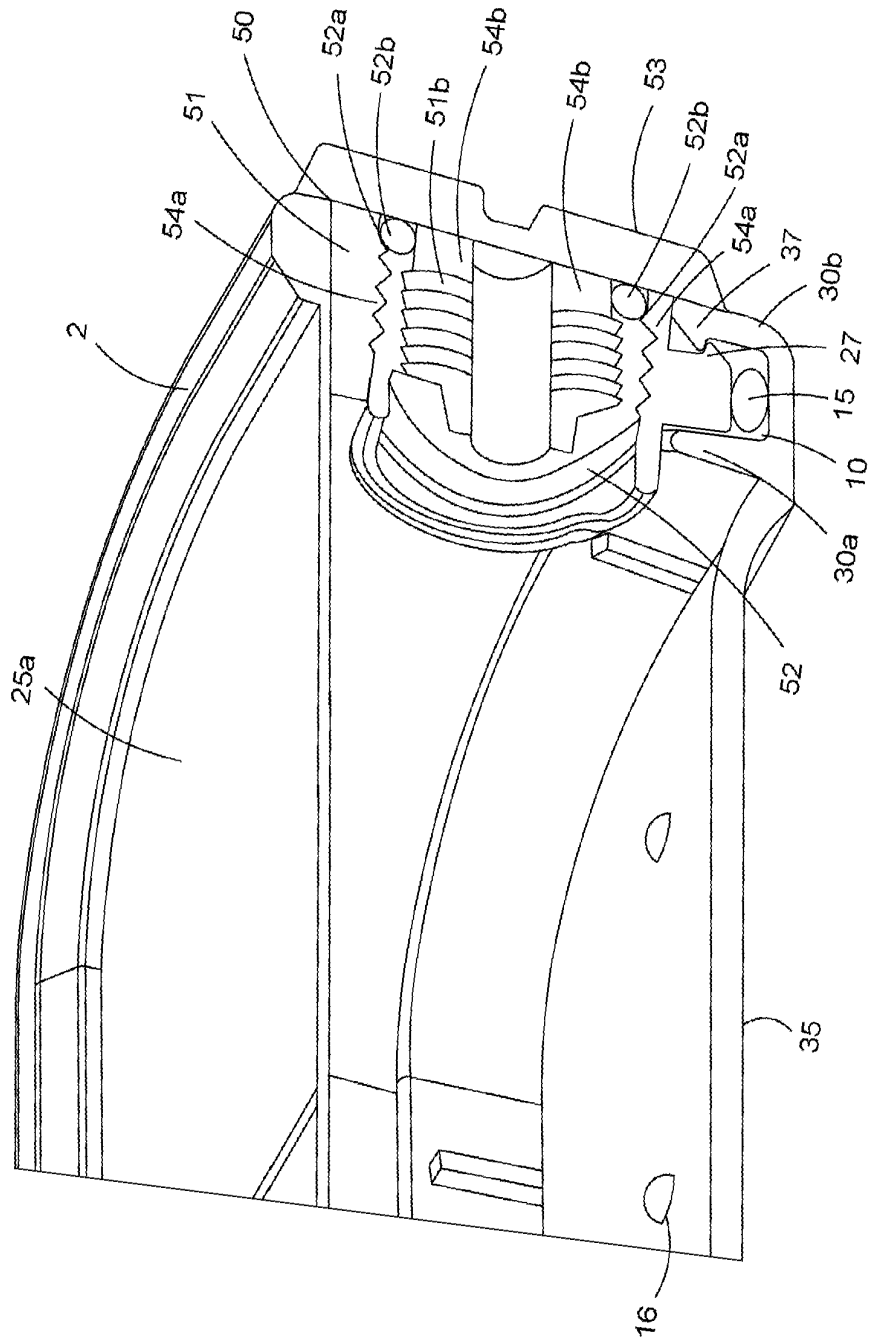
50
52a
52b
54b
51
51b
54b
53
52b
52a
54a
54a
37
30b
2
27
15
10
30a
25a
52
35
16

FIG. 14C

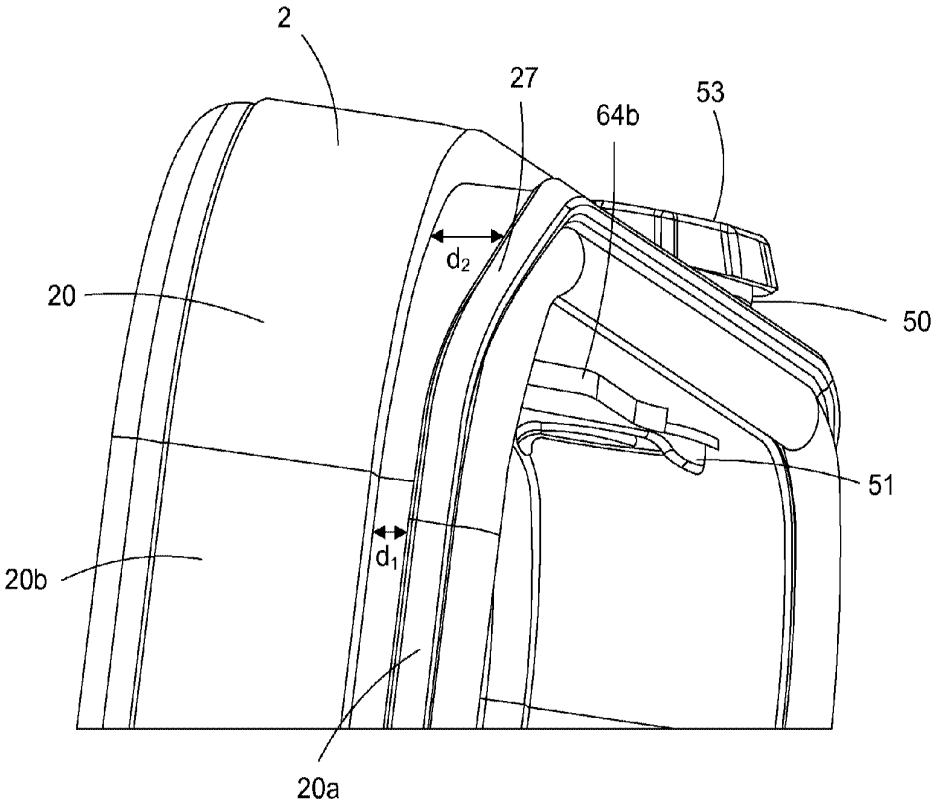

FIG. 14D

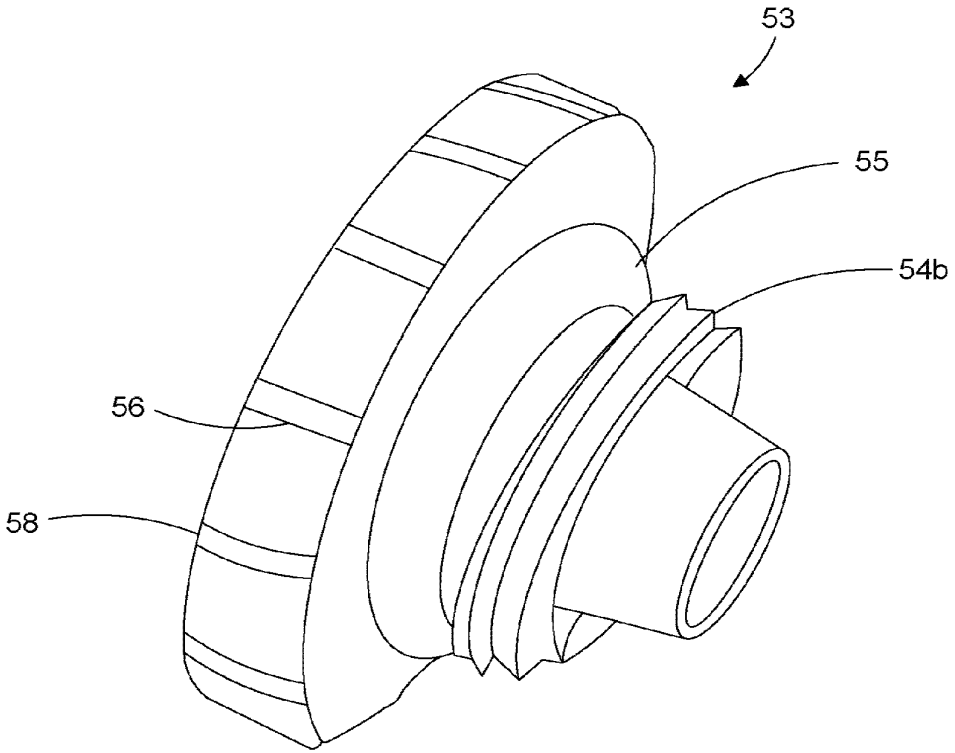

FIG. 15A

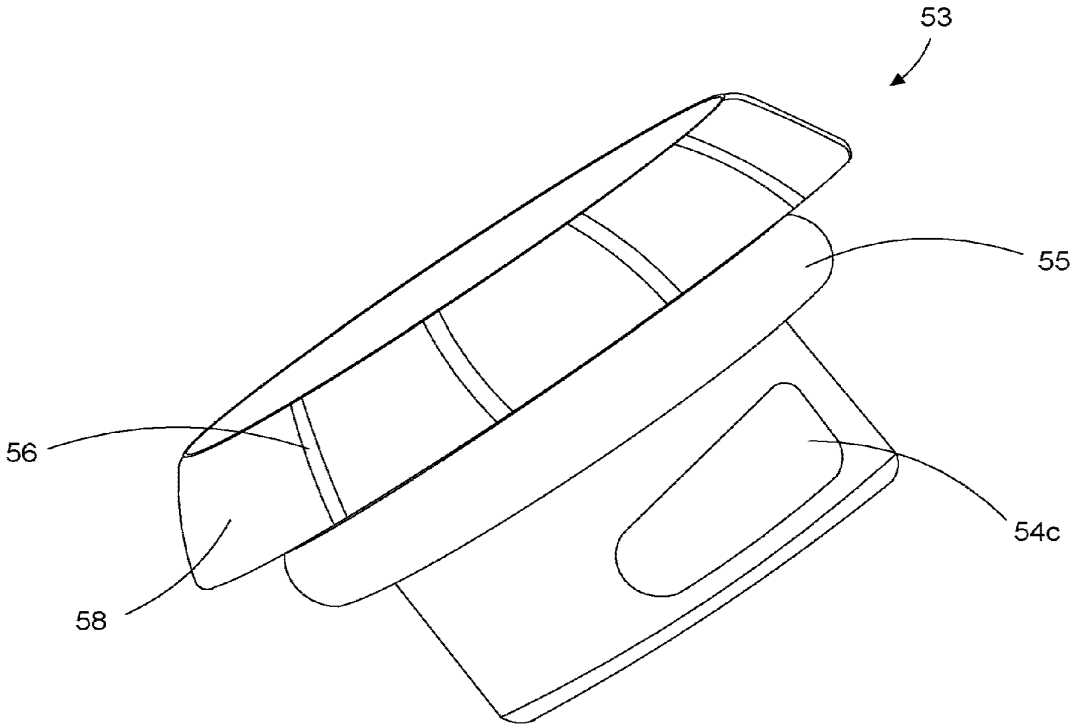

FIG. 15B

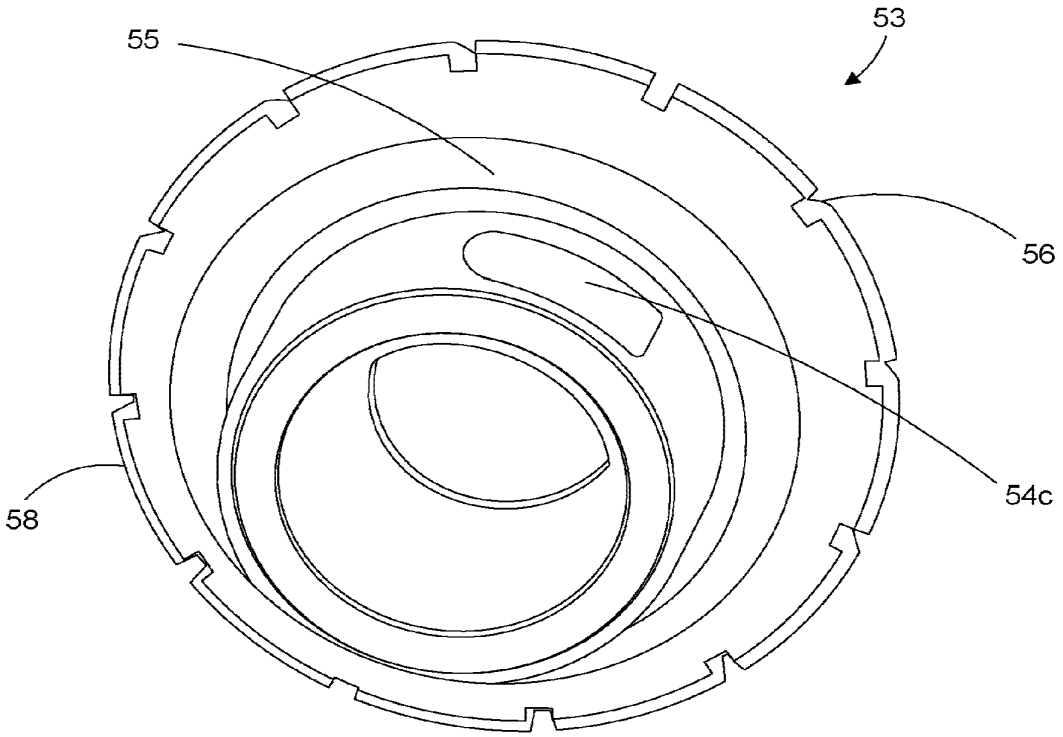

FIG. 15C

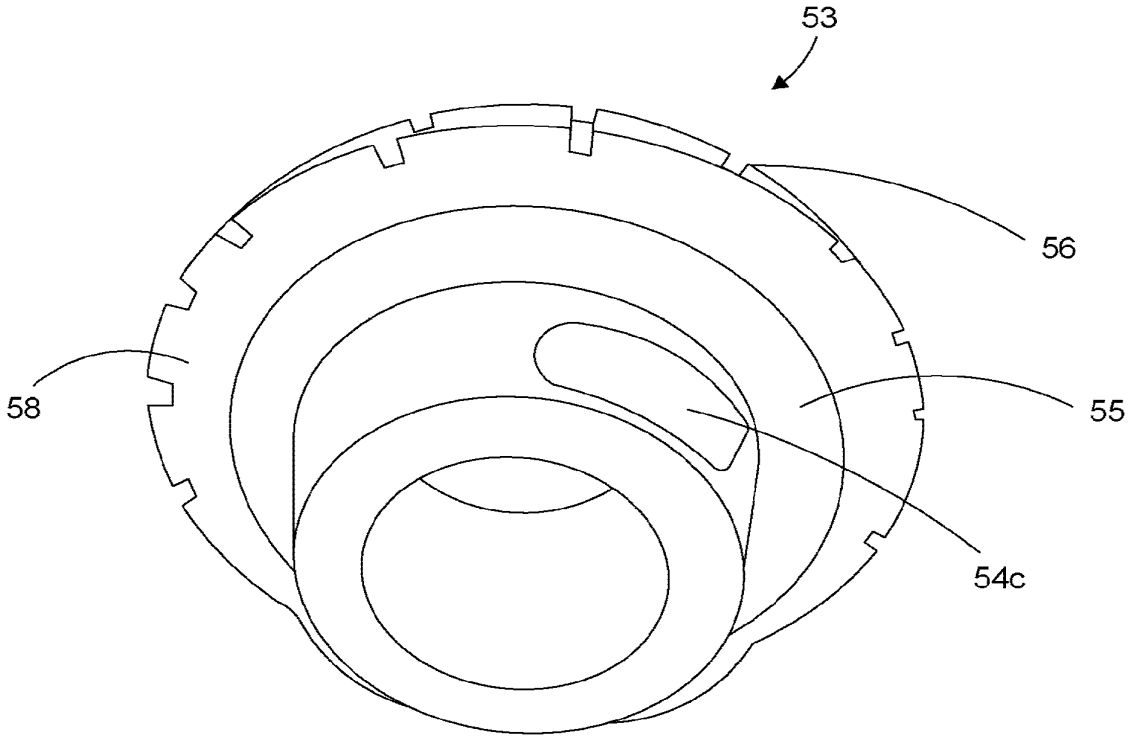

FIG. 15D

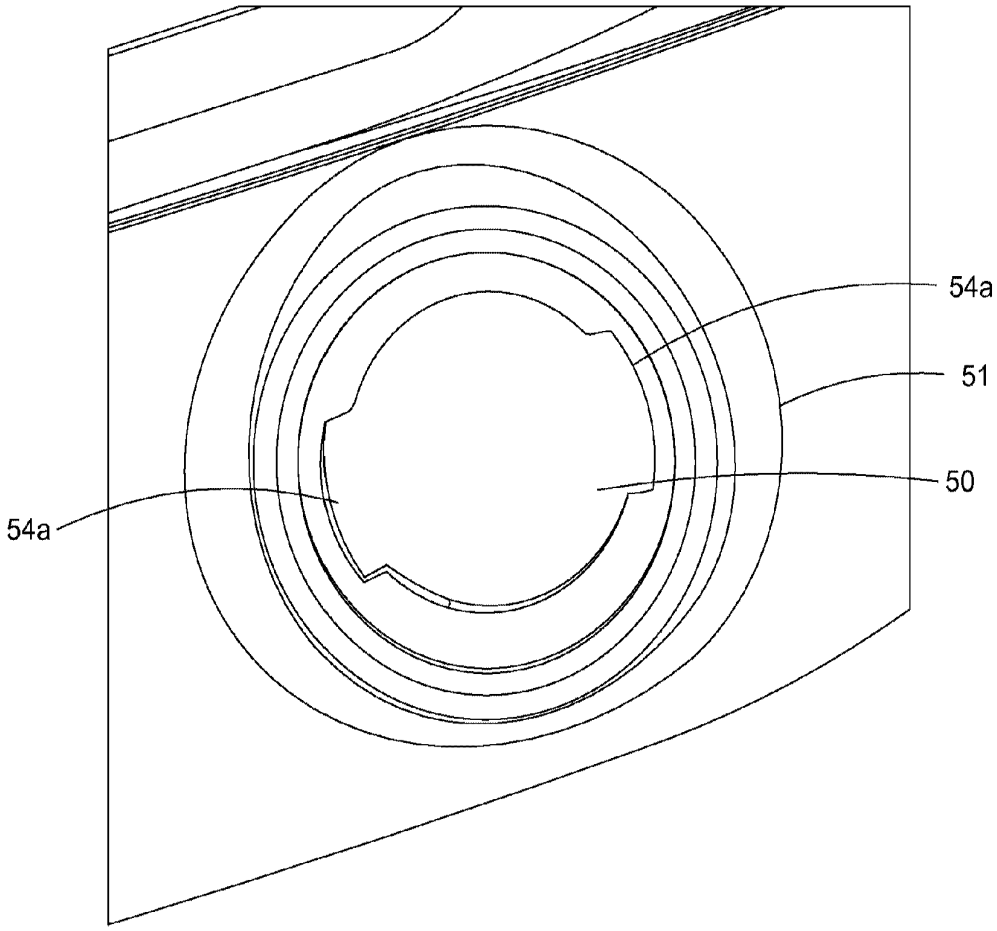

FIG. 15E

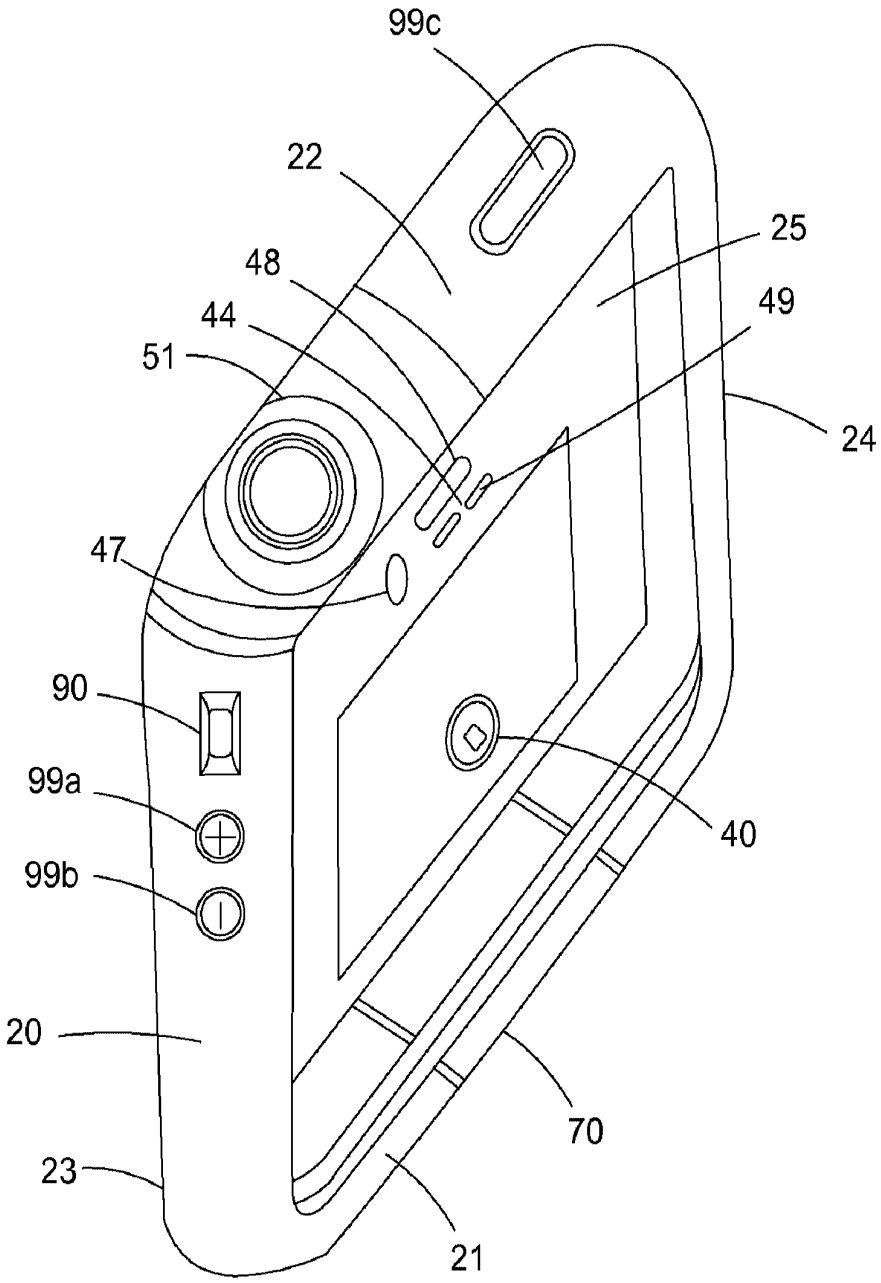

FIG. 15F

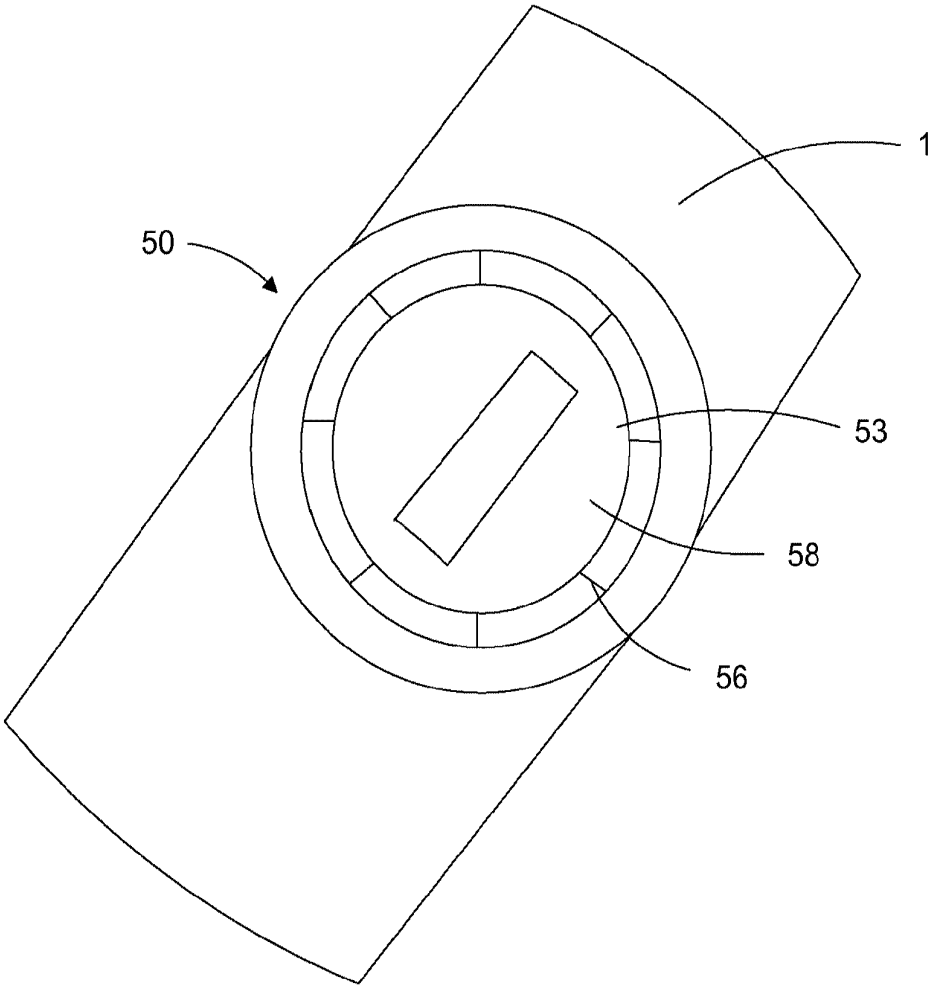

FIG. 15G

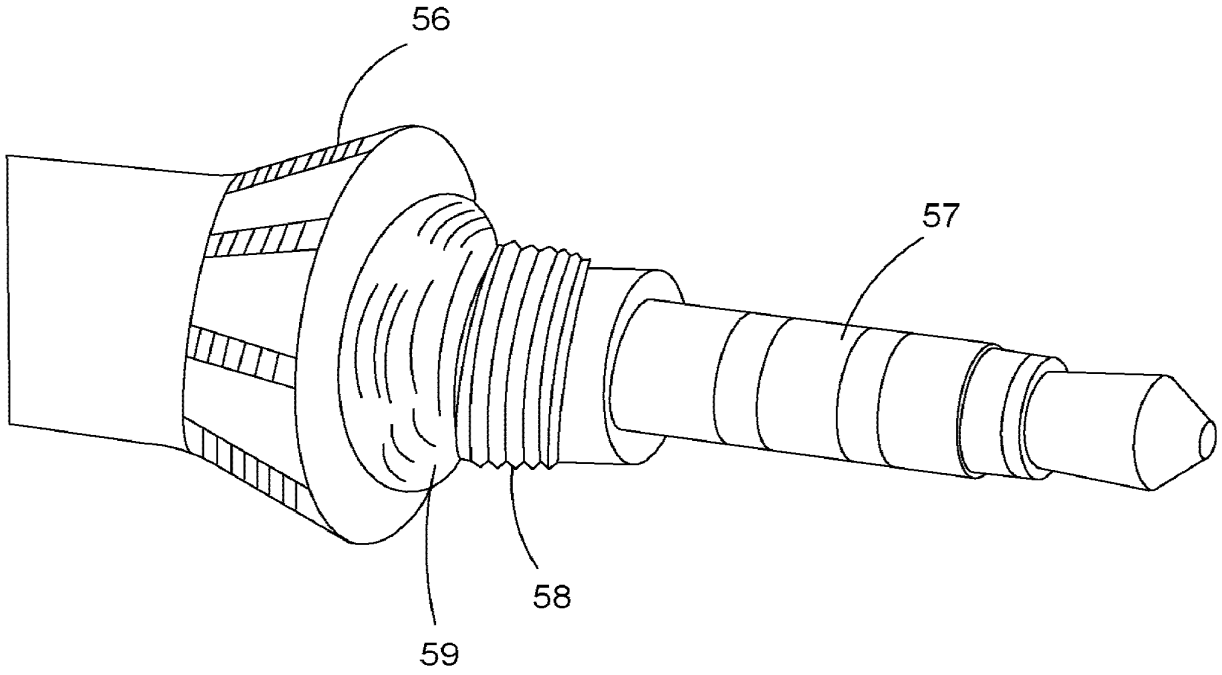

FIG. 16A

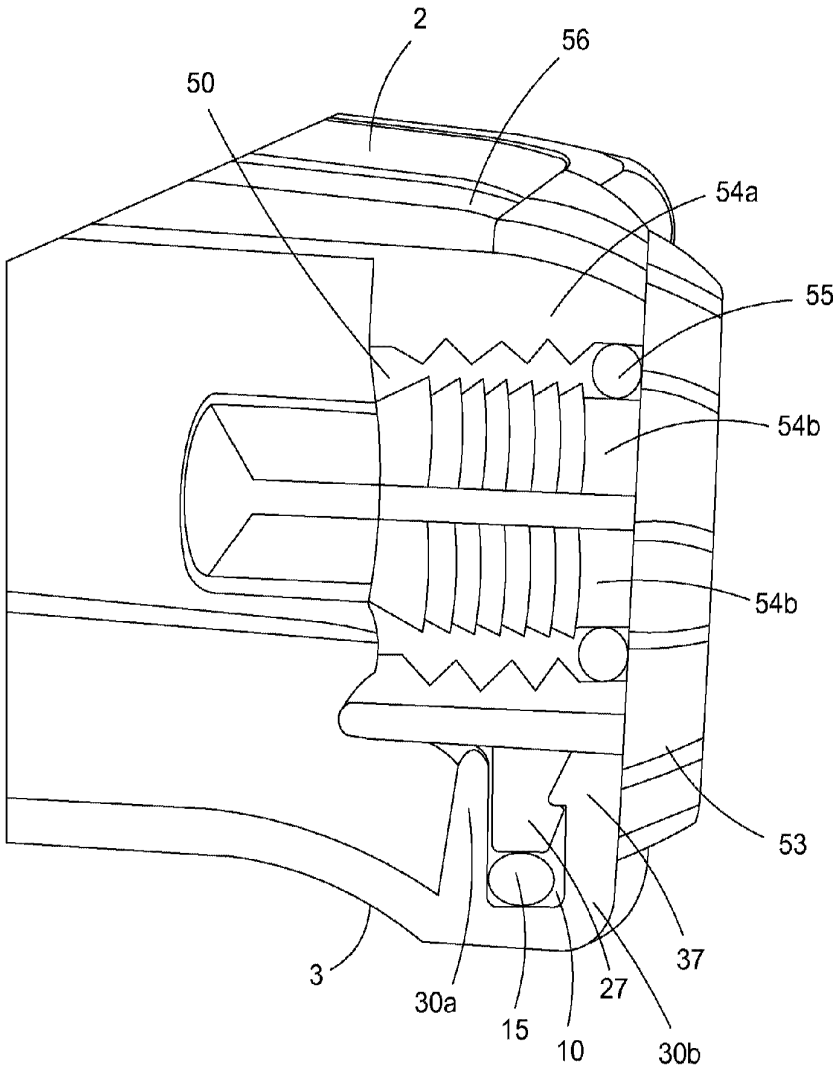

FIG. 16B

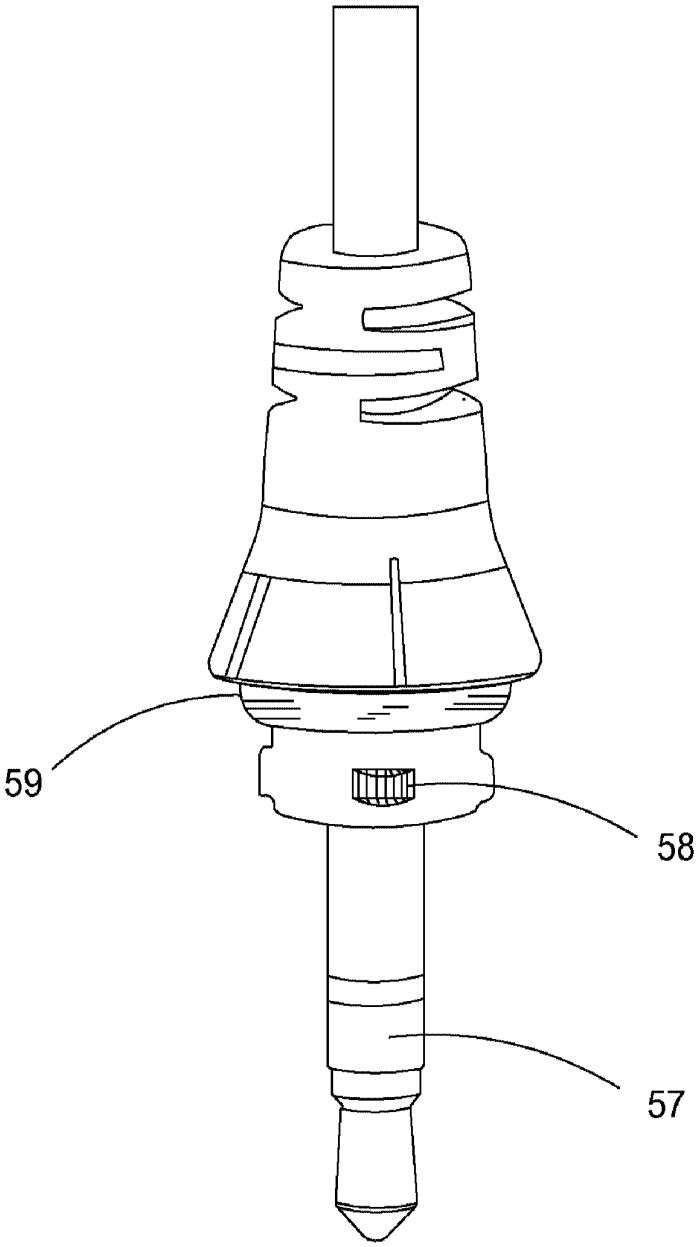

FIG. 16C

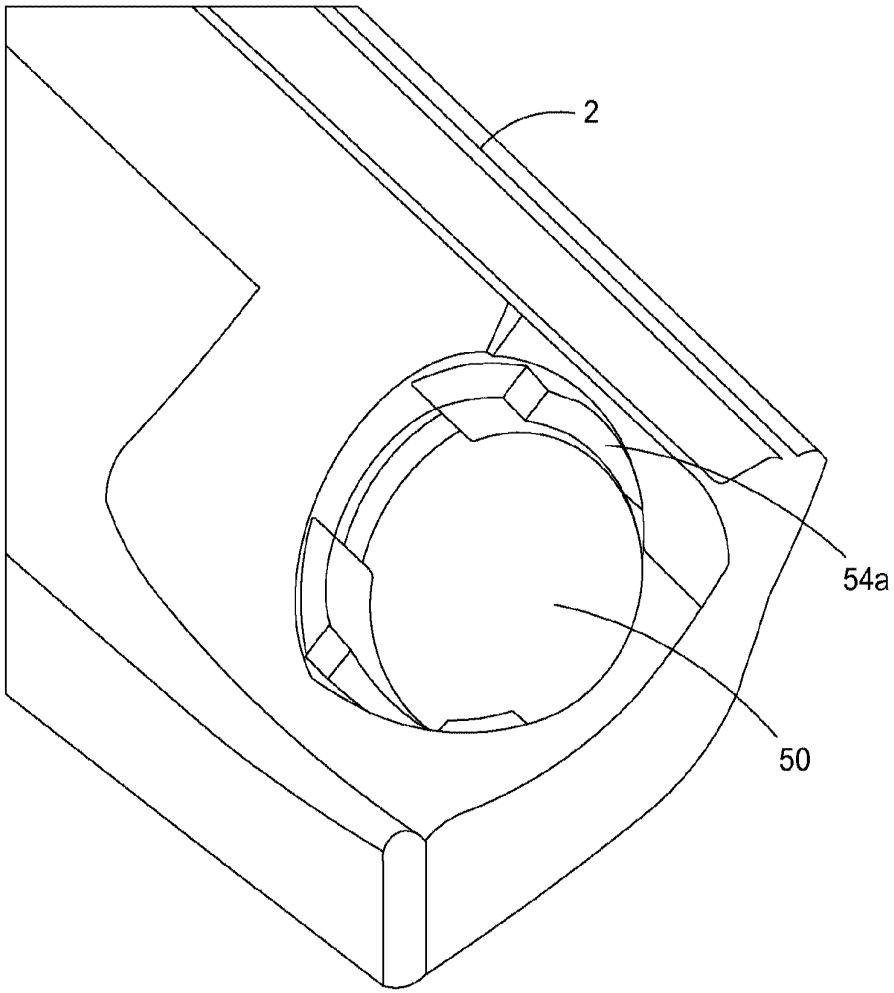

FIG. 16D

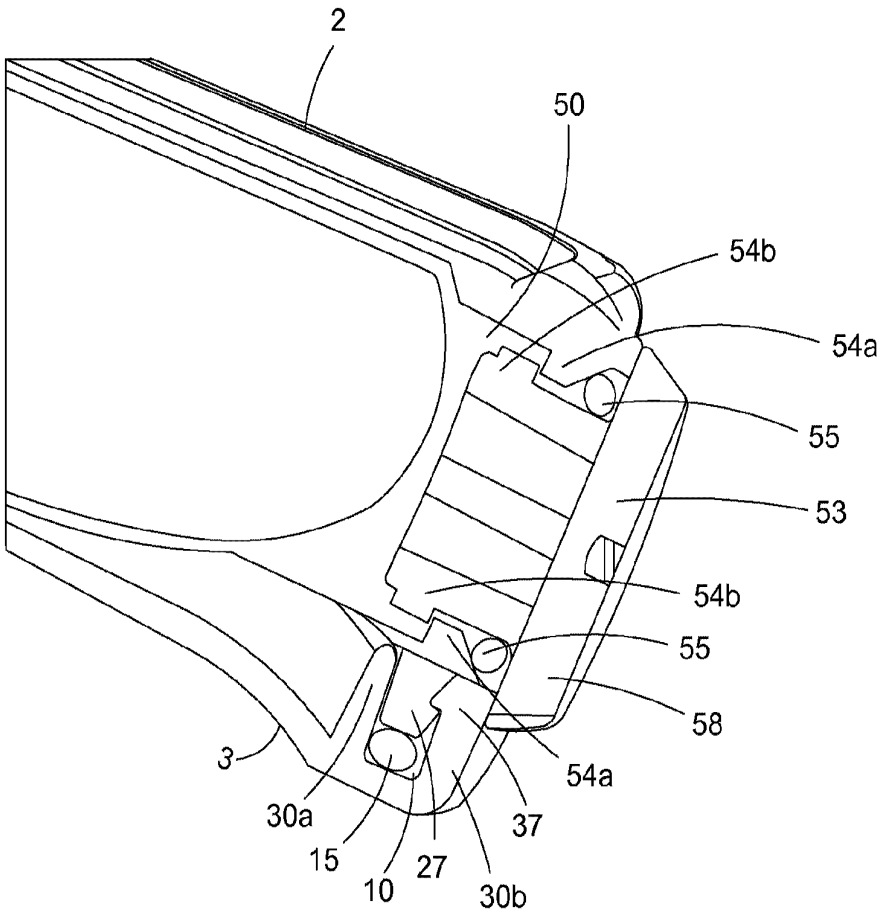

FIG. 16E

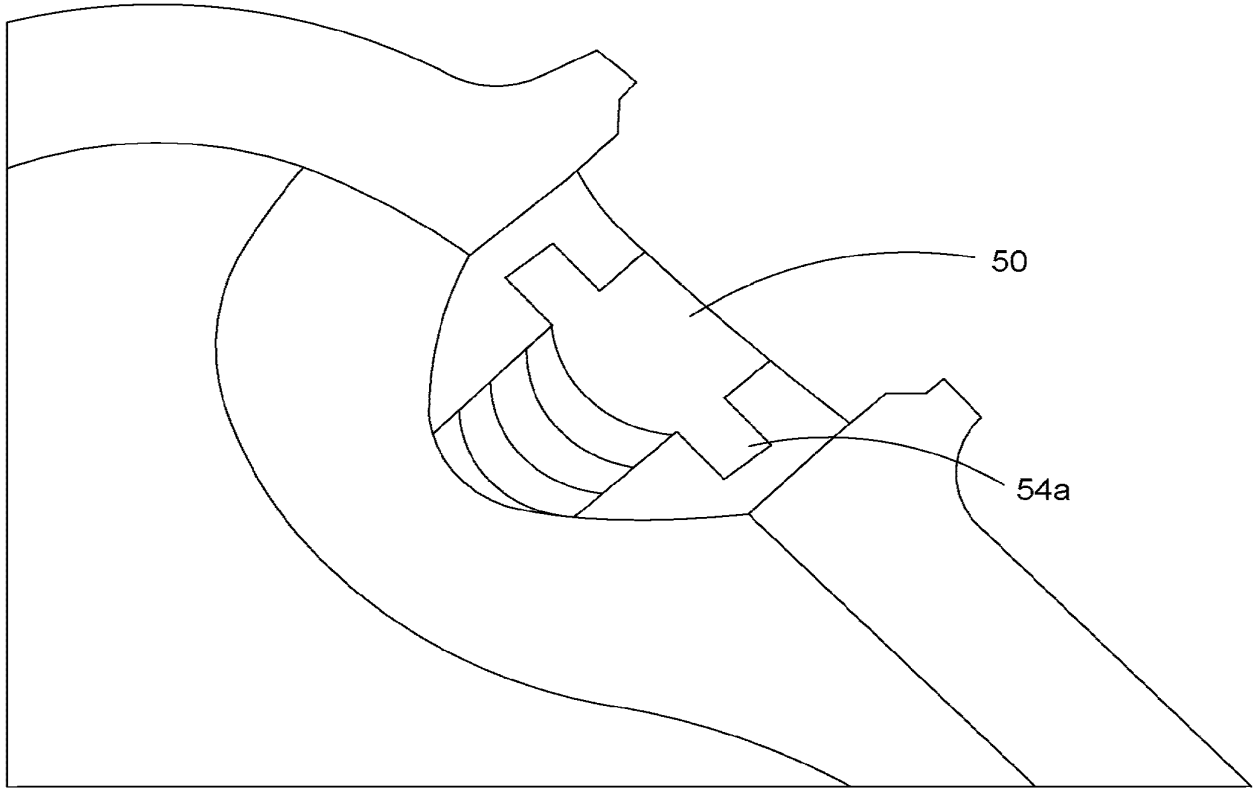

FIG. 16F

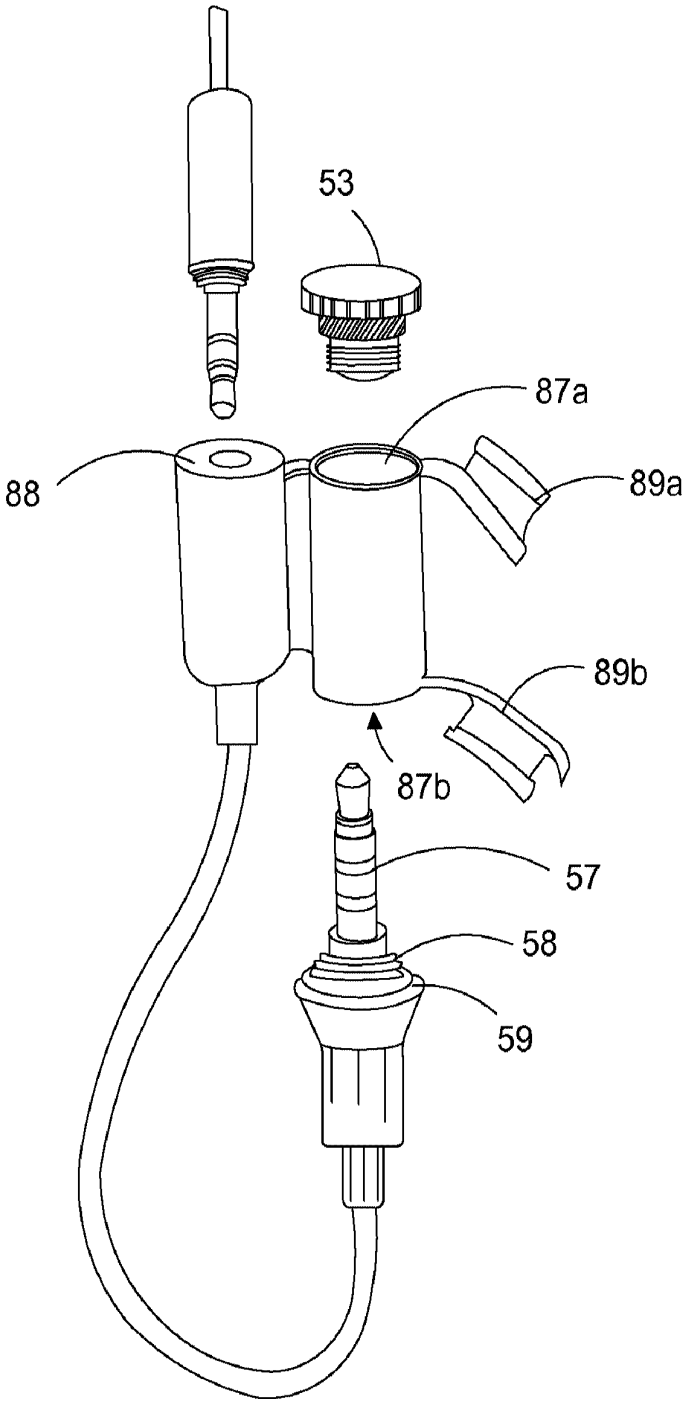

FIG. 17A

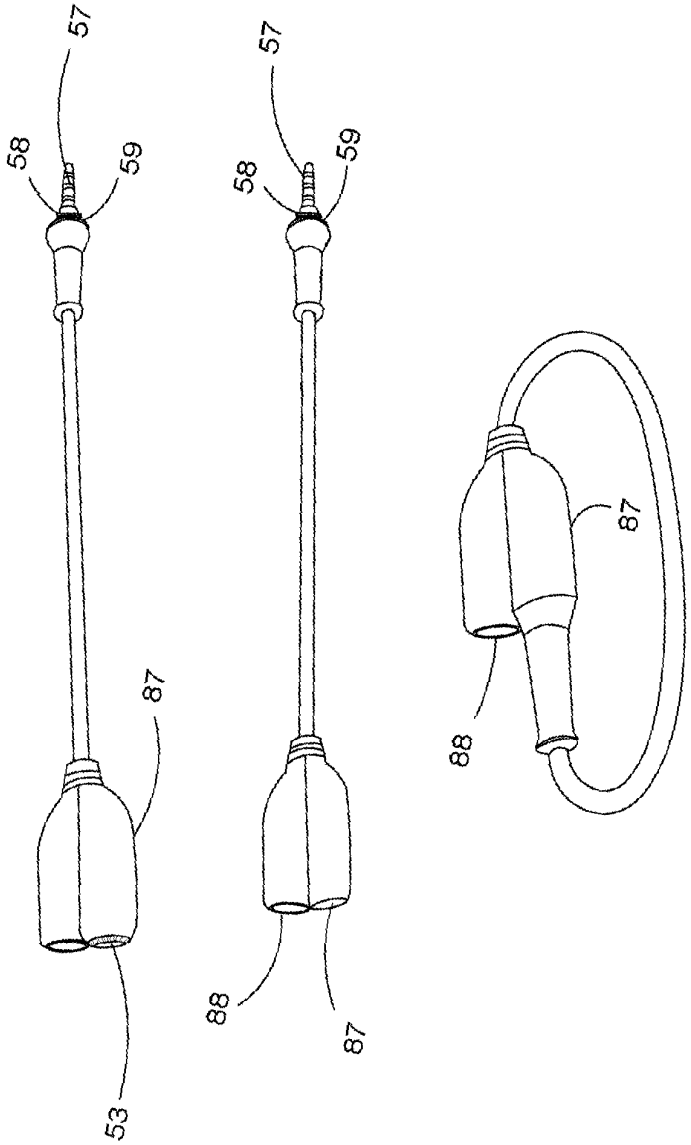

FIG. 17B

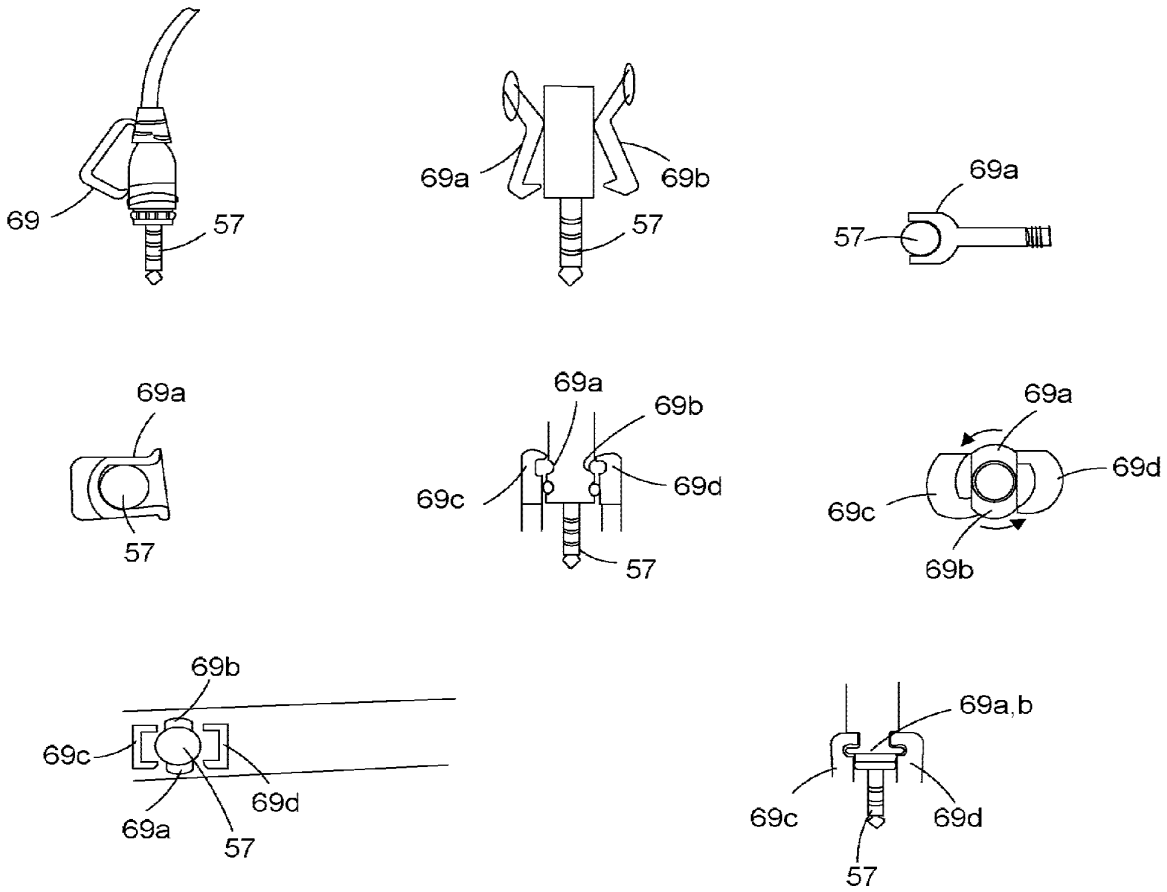
69
57
69a
69b
57
69a
57
69a
57
69a
69b
69c
69d
57
69a
69d
69c
69b
69b
69c
69d
69a
57
69a,b
69c
69d
57

FIG. 17C

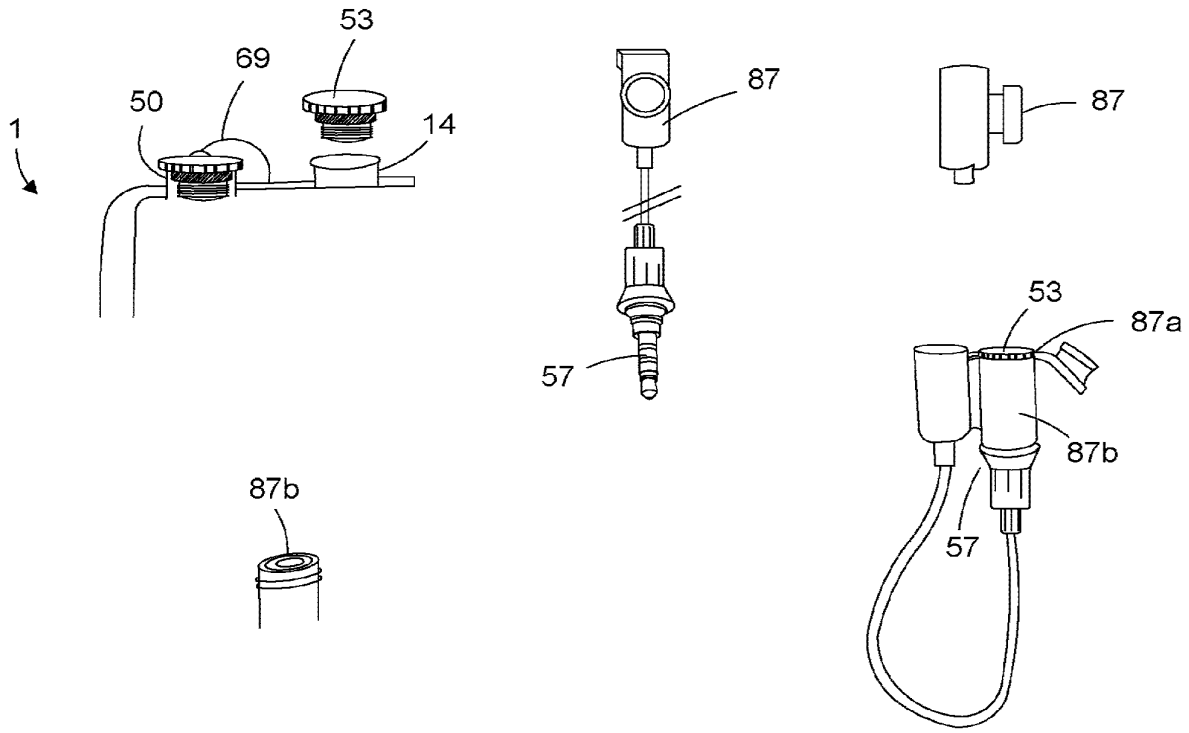

FIG. 17D

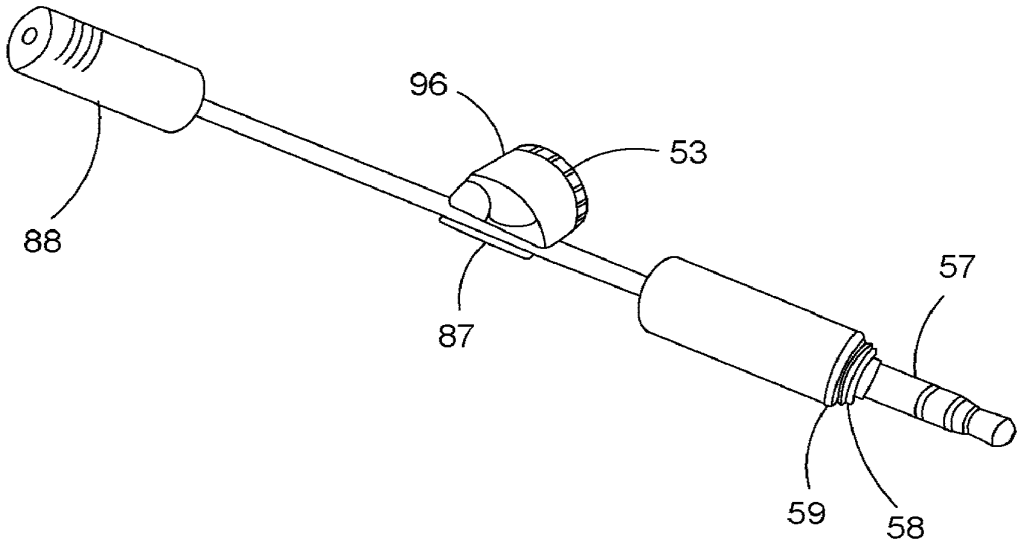

FIG. 17E

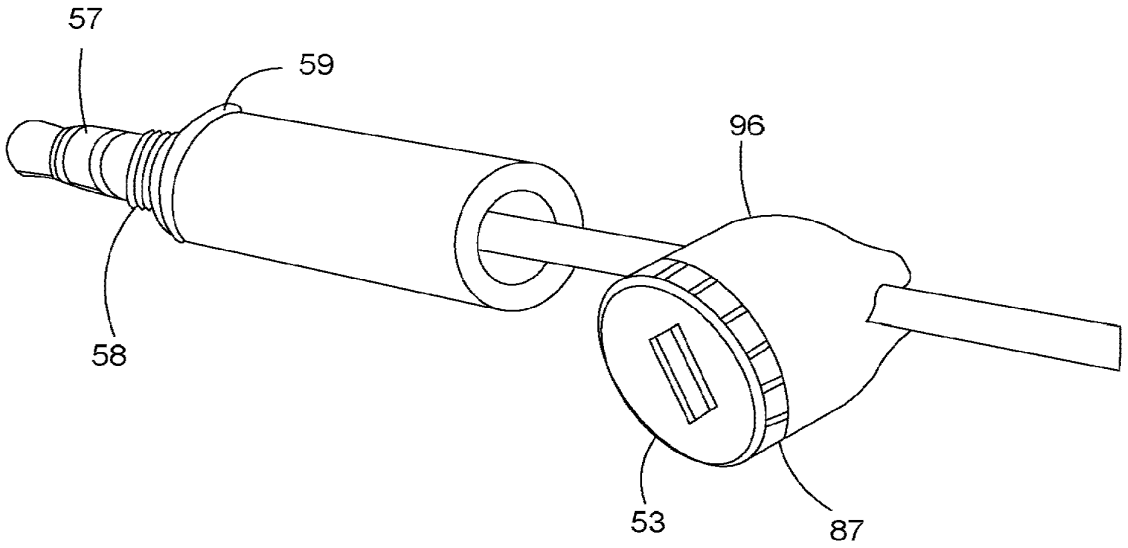

FIG. 17F

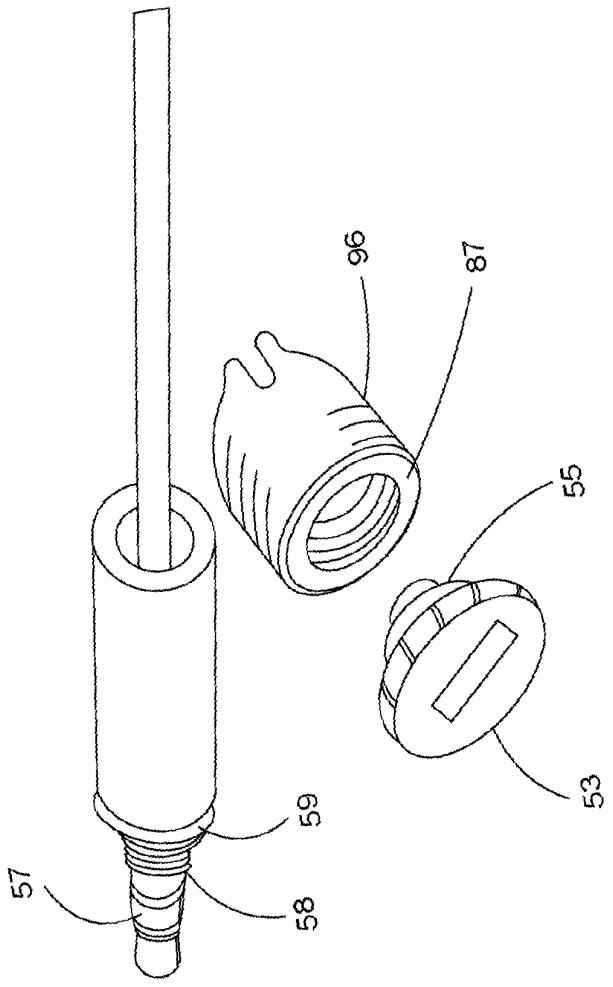

FIG. 17G

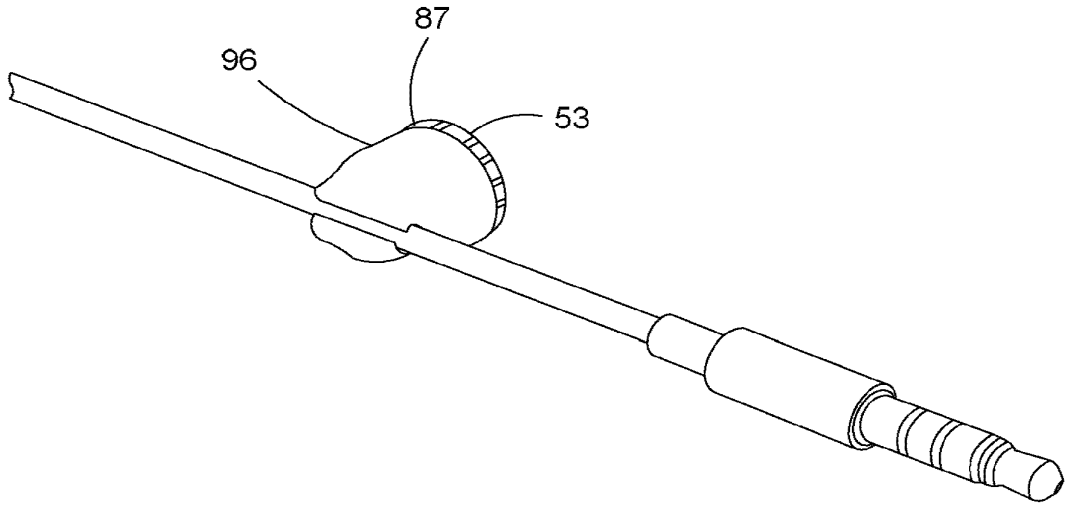

FIG. 17H

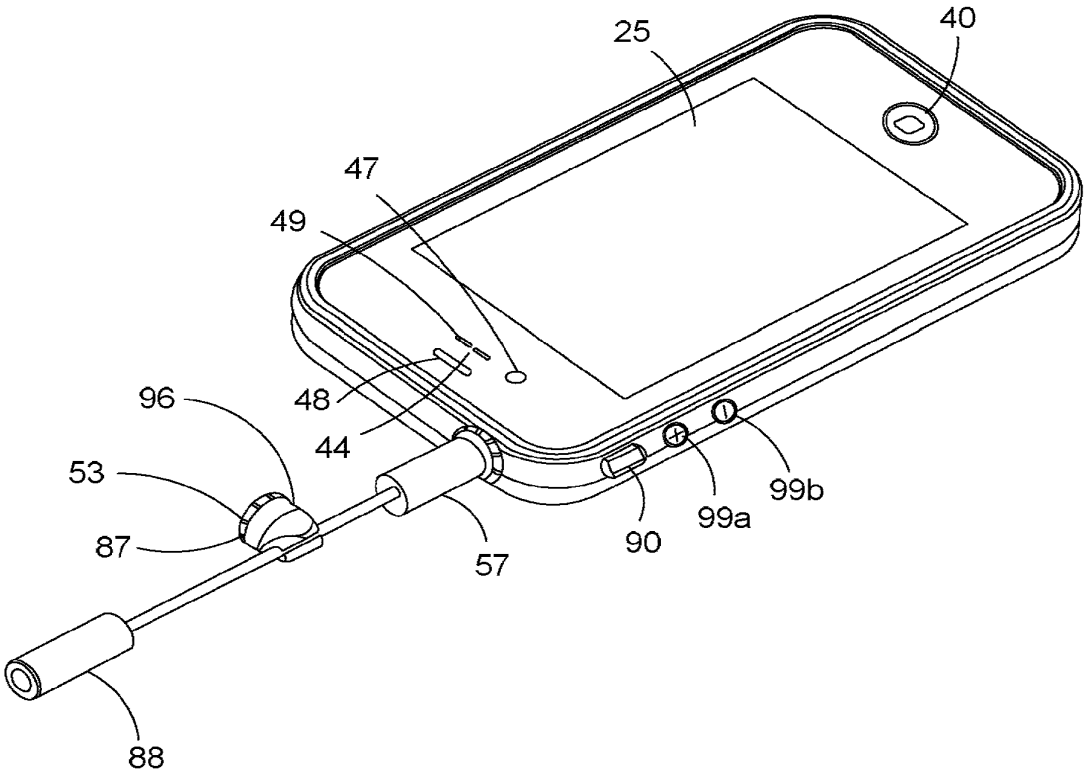

FIG. 17I

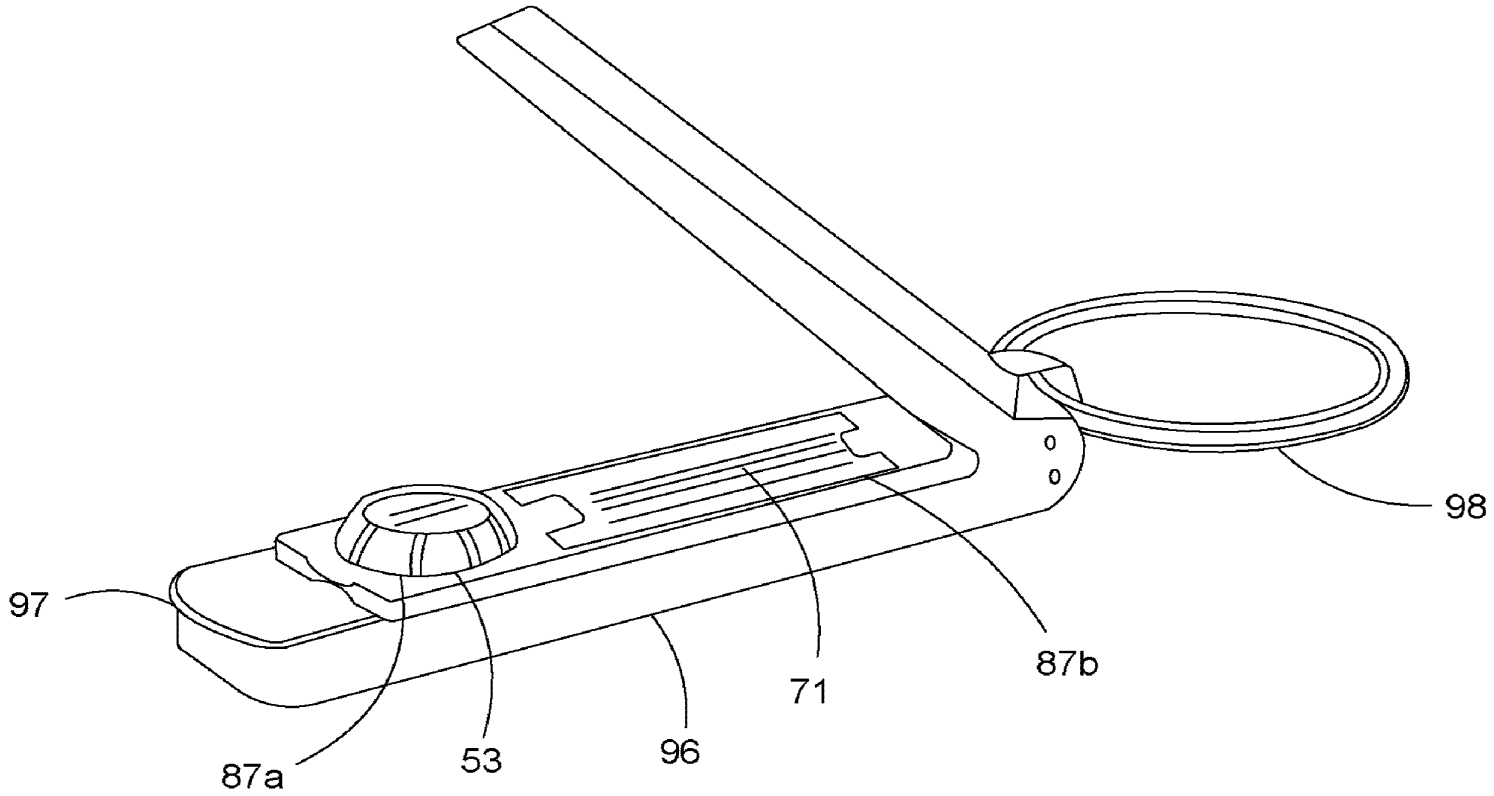

FIG. 18A

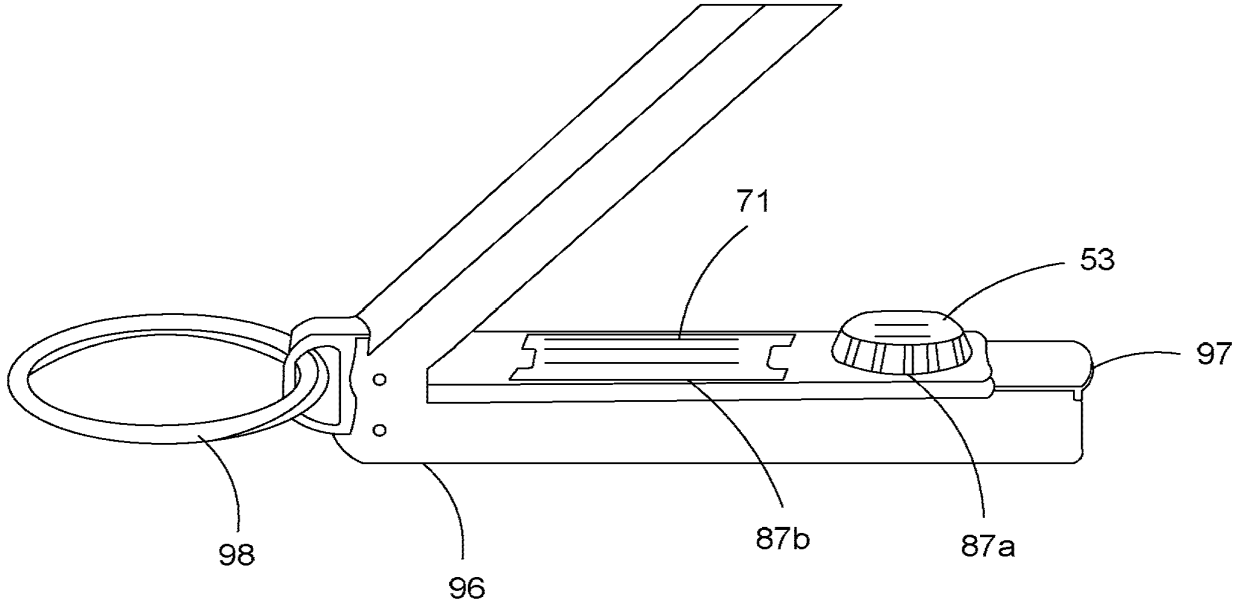

FIG. 18B

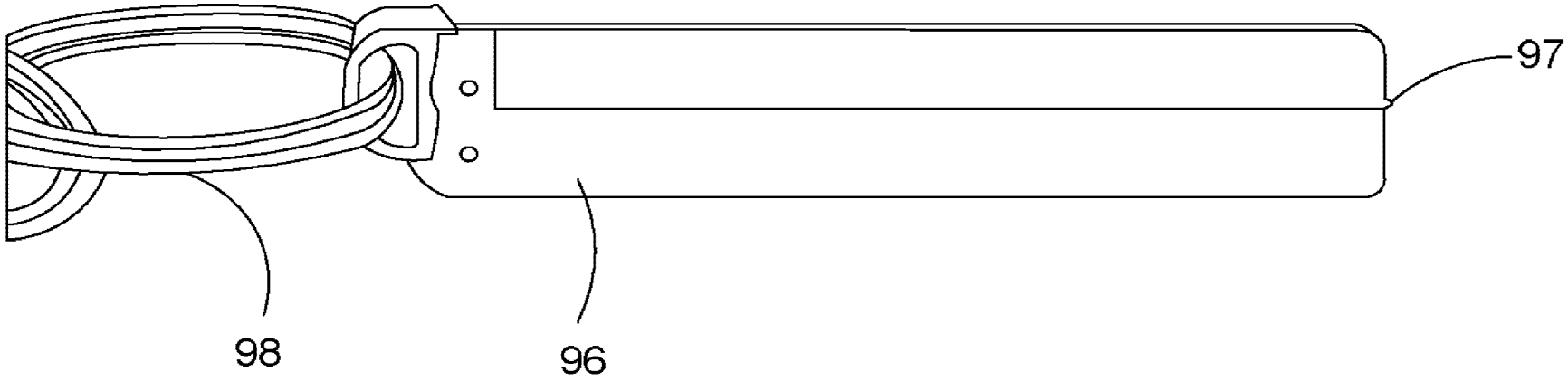

FIG. 18C

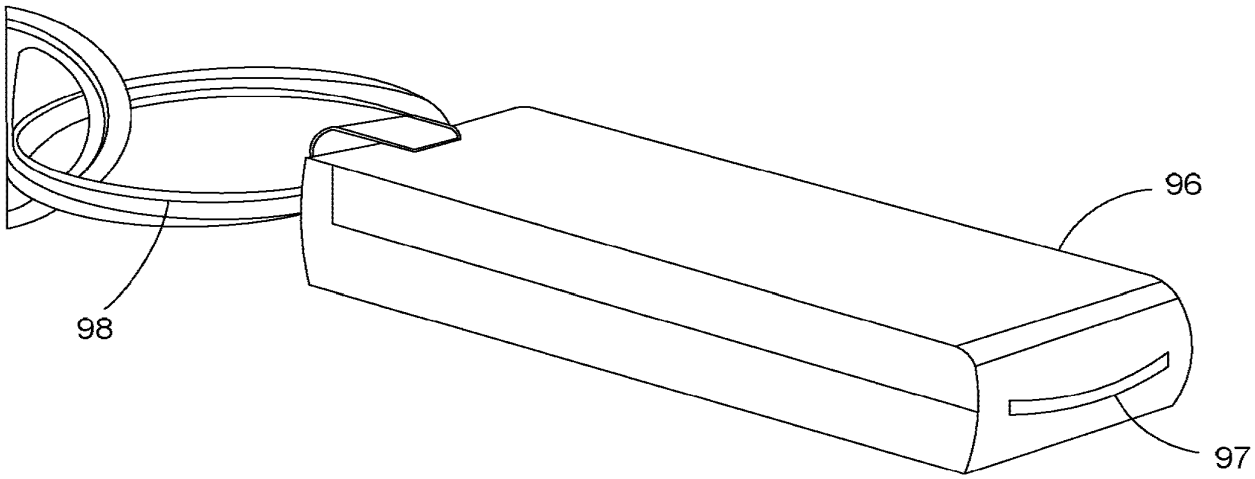

FIG. 18D

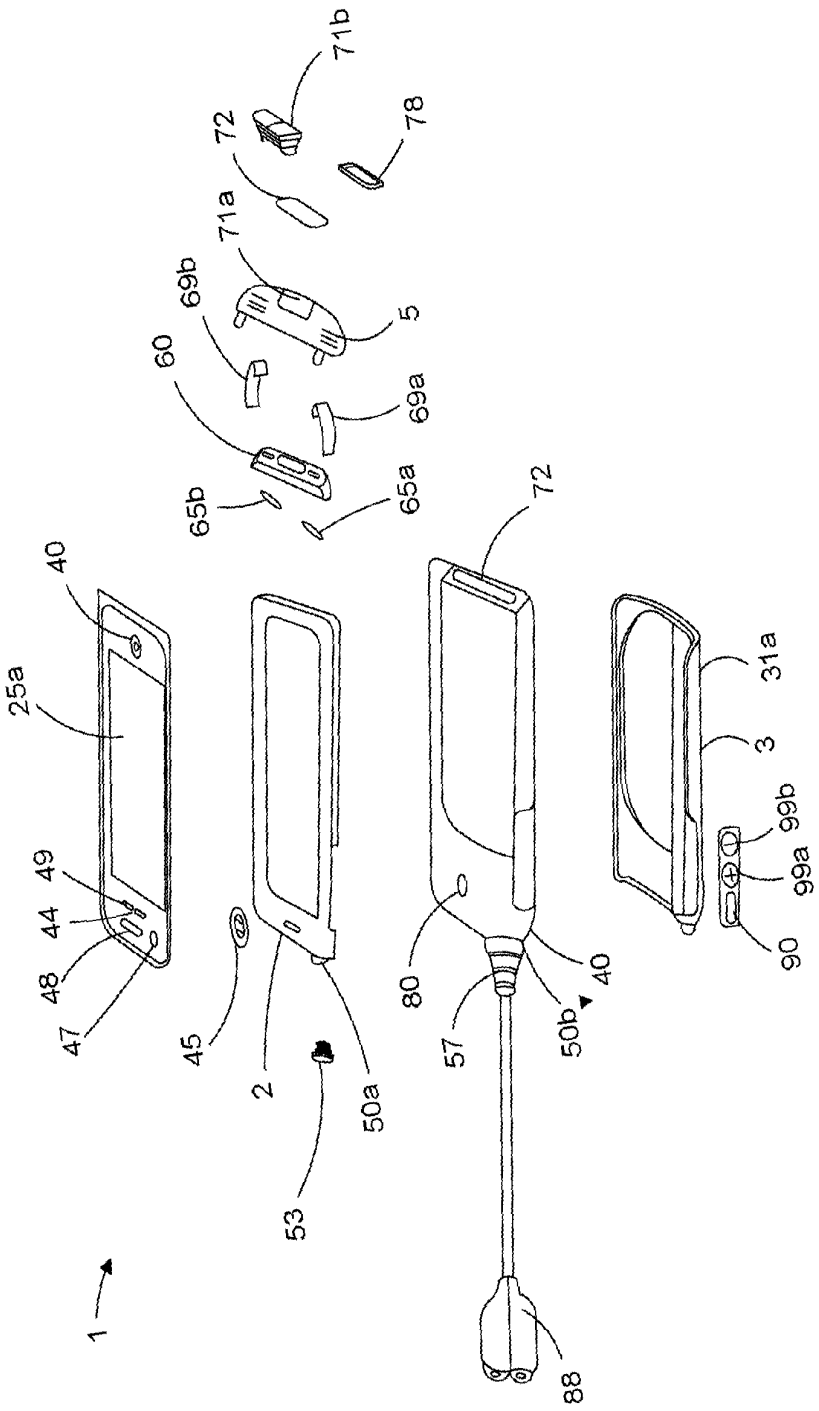
71b
72
78
71a
69b
5
60
69a
65b
65a
72
40
25a
31a
3
99b
99a
90
49
44
48
47
45
2
50a
53
80
57
50b
40
88
1

FIG. 19A

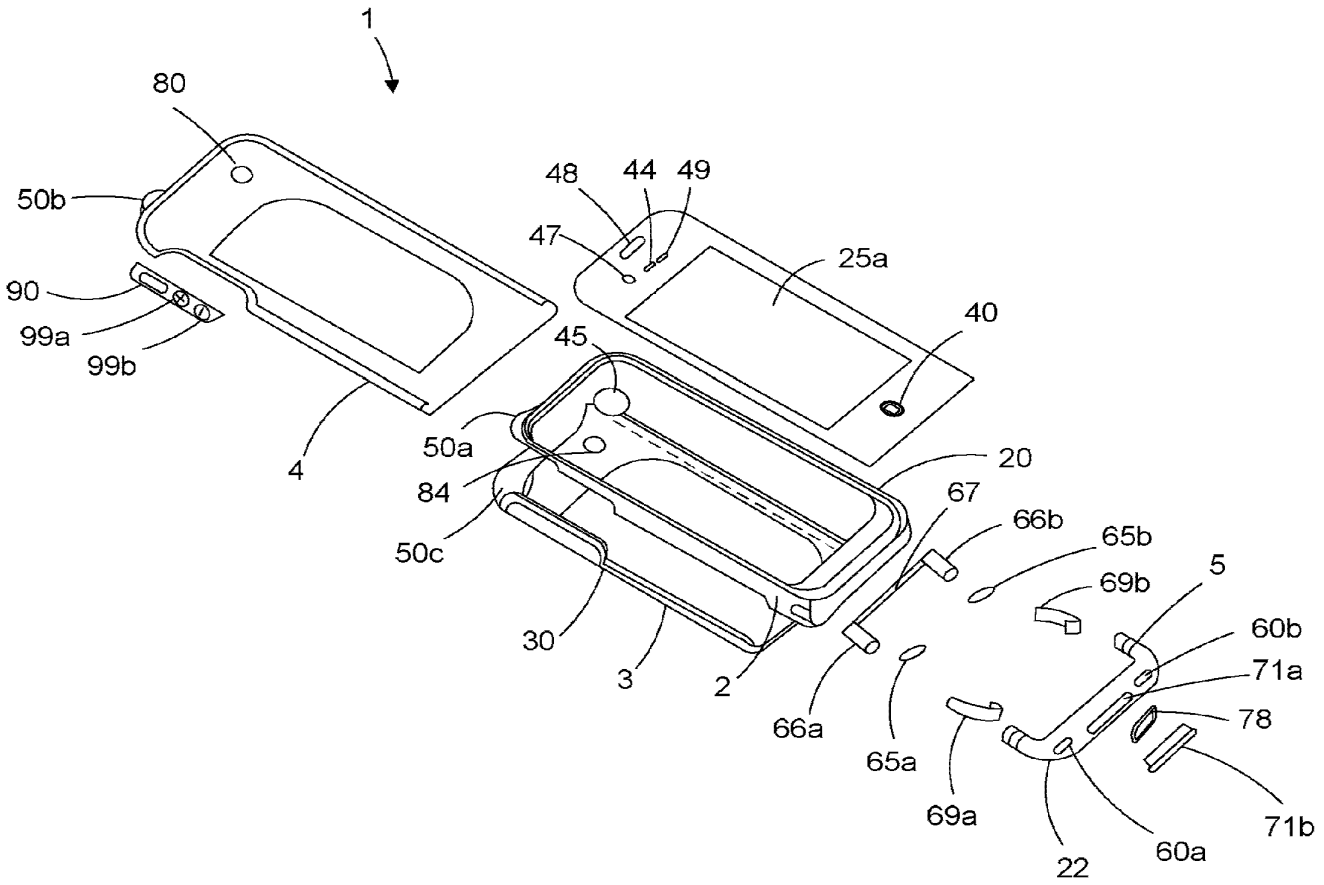
1
80
50b
90
99a
99b
4
48
44
49
47
25a
40
45
50a
84
50c
20
67
66b
65b
69b
5
60b
71a
78
71b
60a
22
69a
65a
66a
30
3
2

FIG. 19B

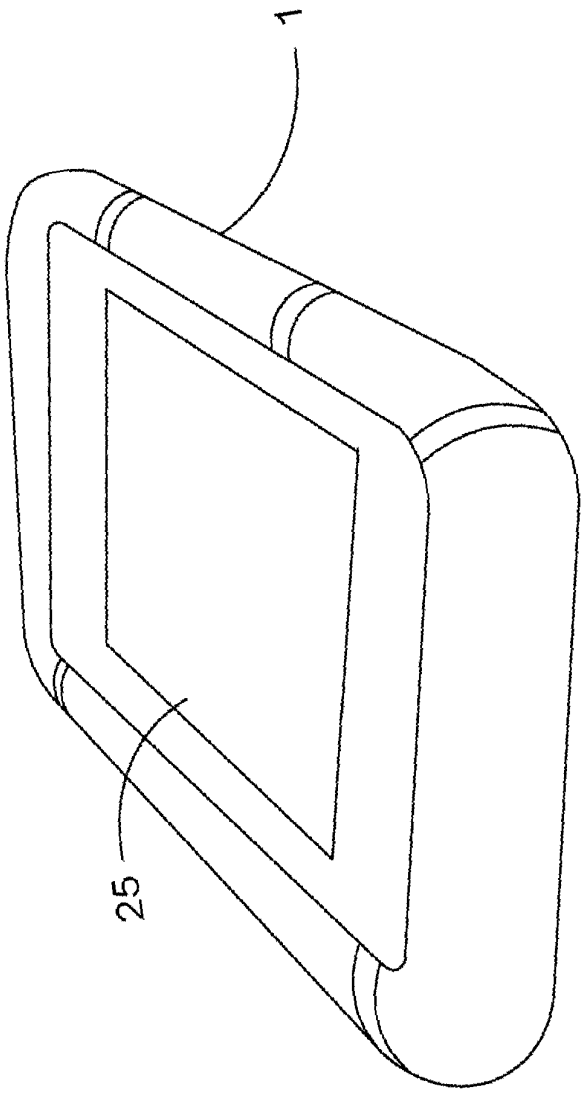

FIG. 19C

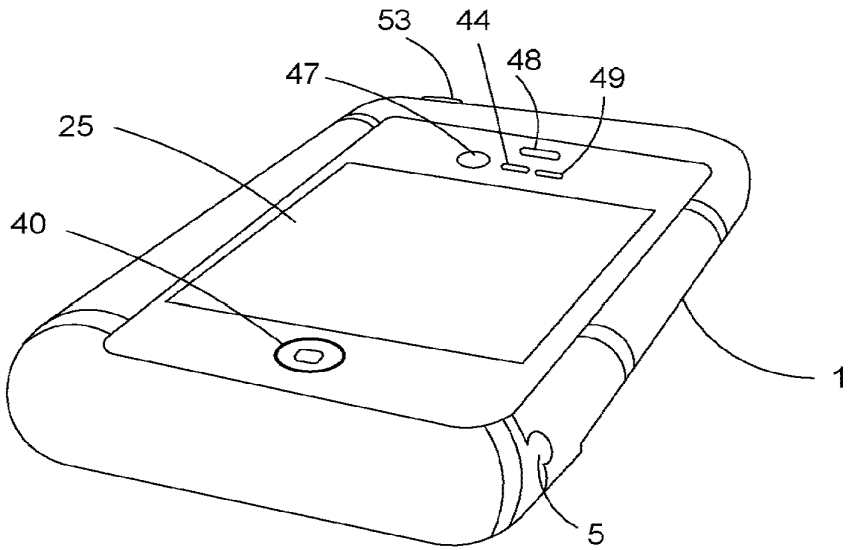

FIG. 19D

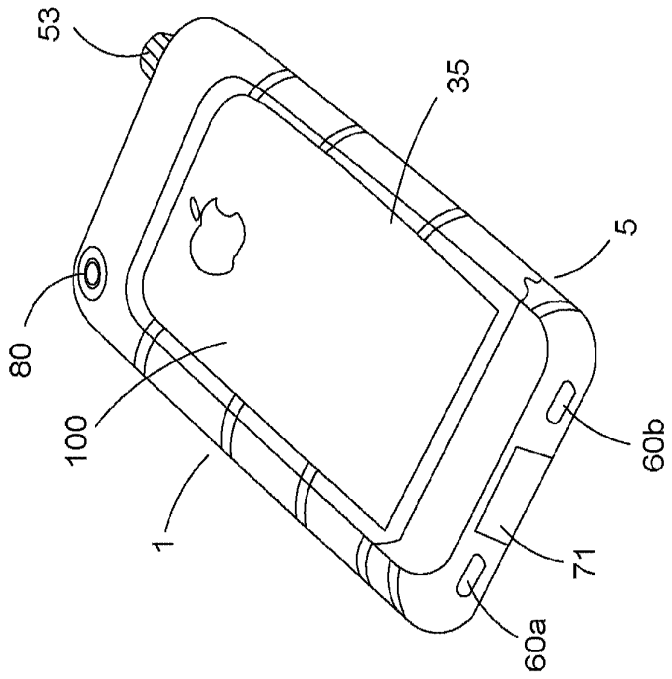

FIG. 19E

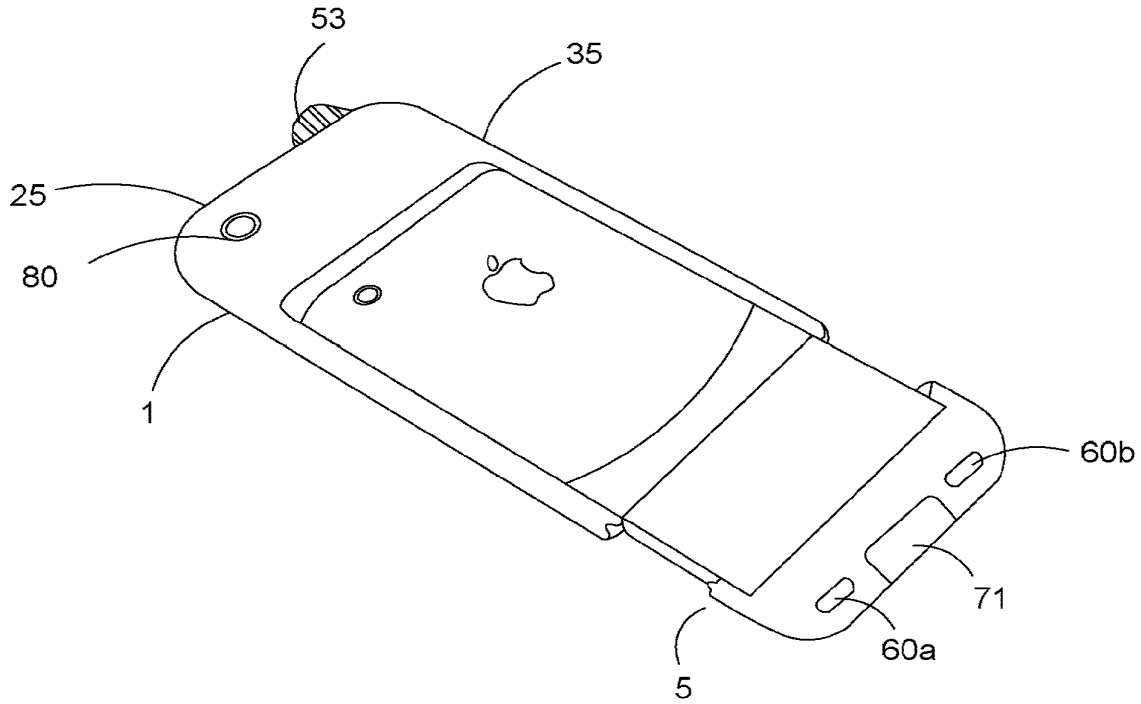

FIG. 19F

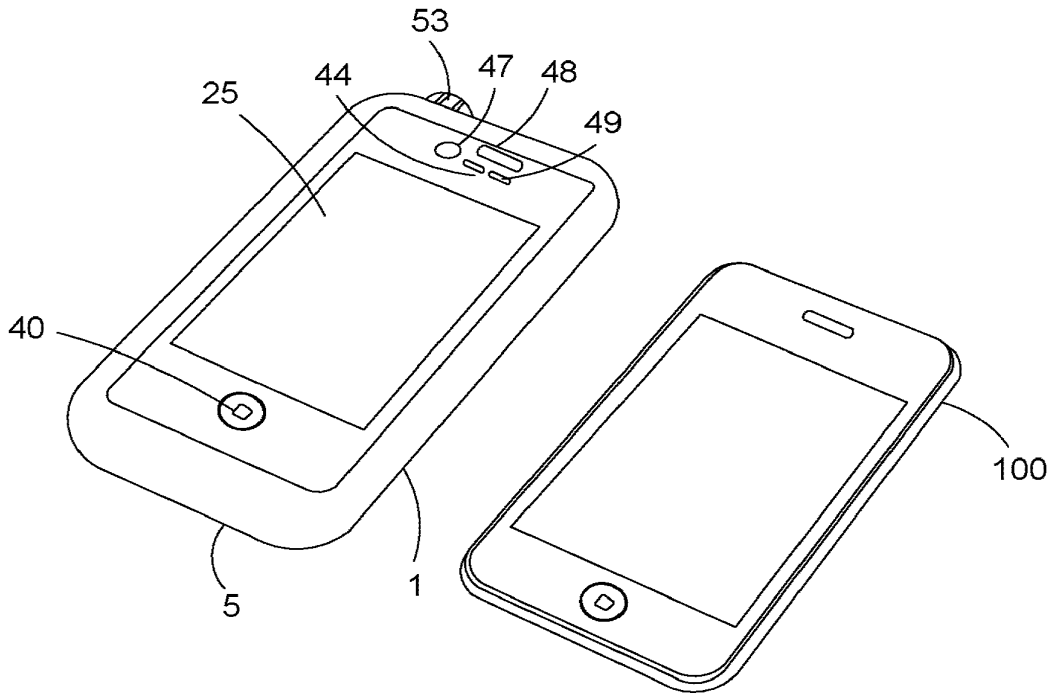

FIG. 19G

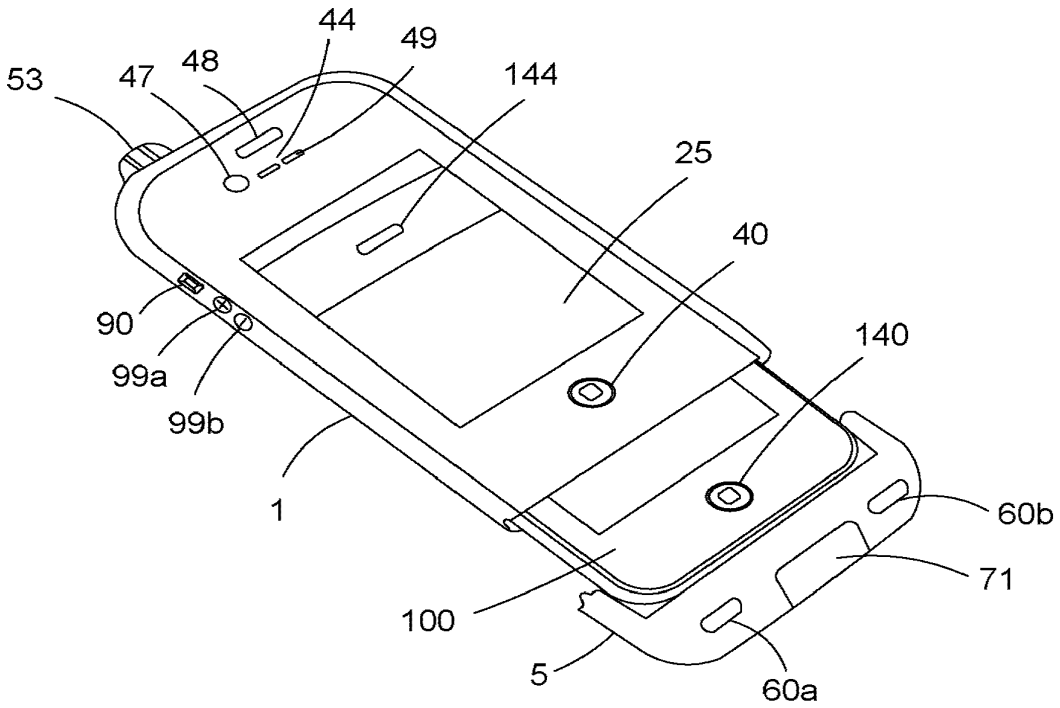

FIG. 19H

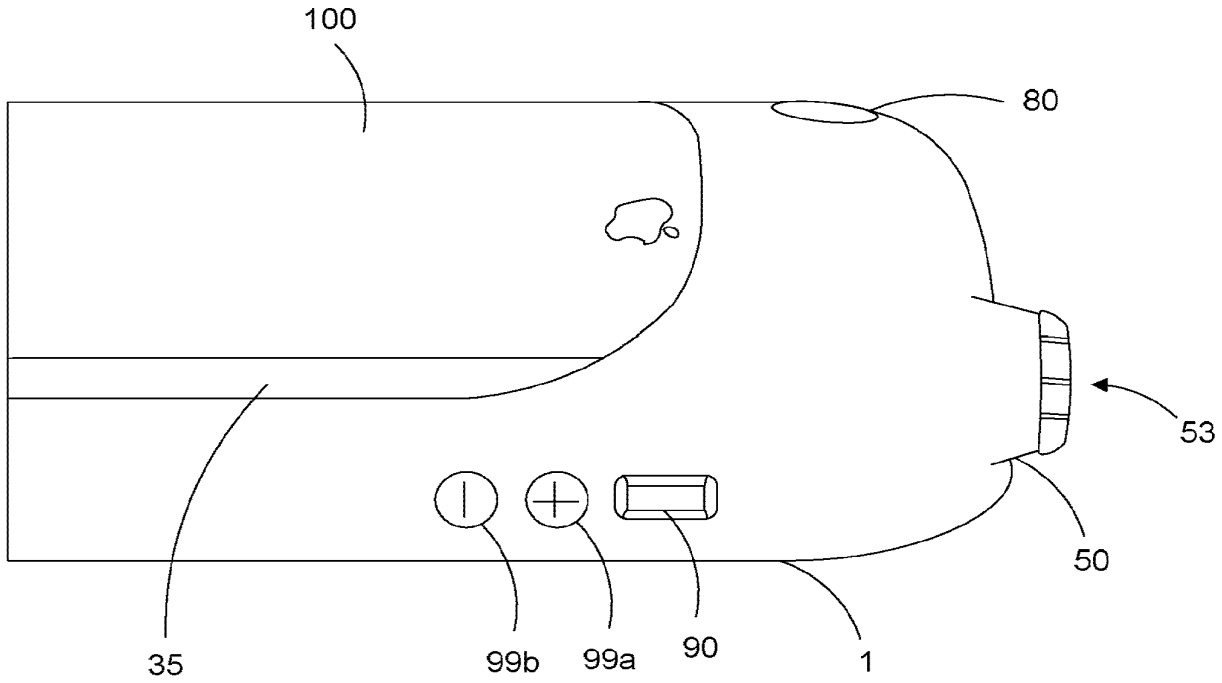

FIG. 19I

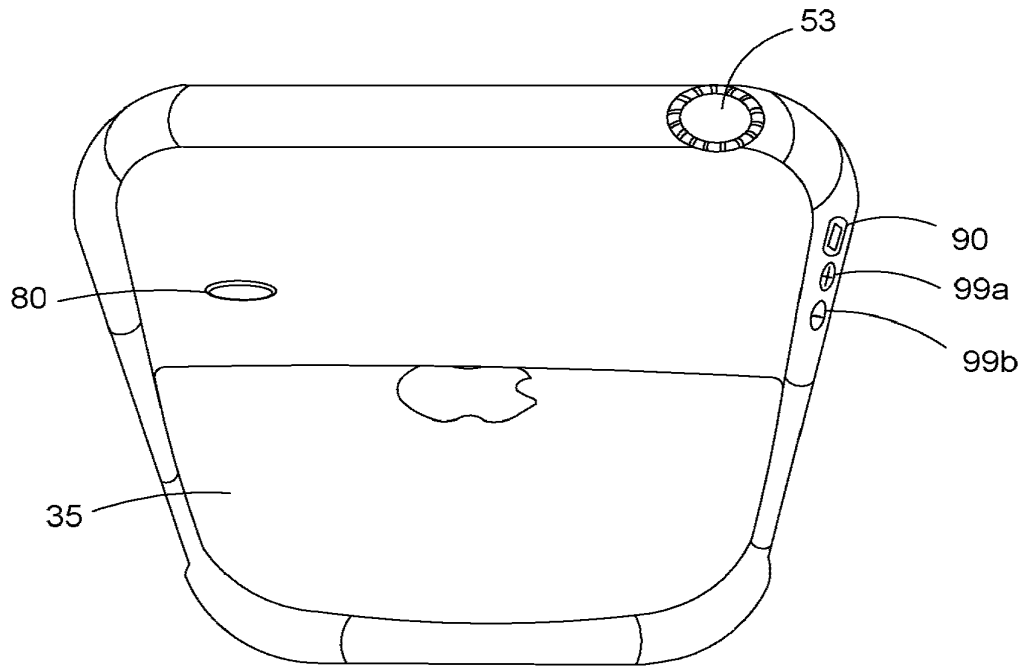

FIG. 19J

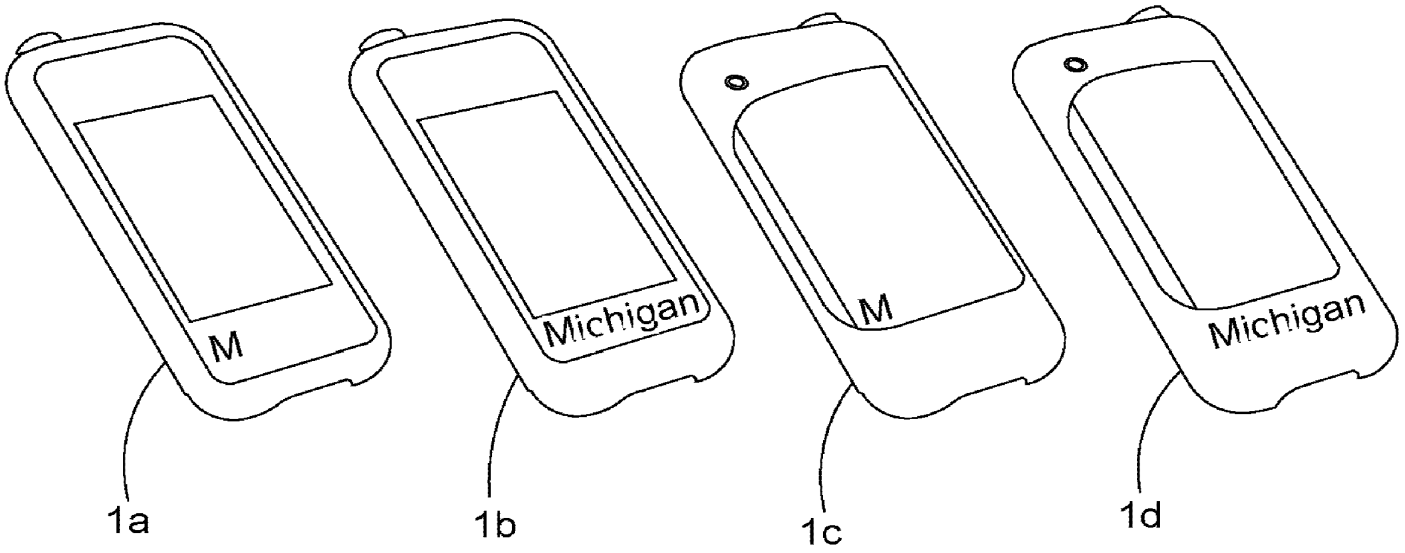

FIG. 19K

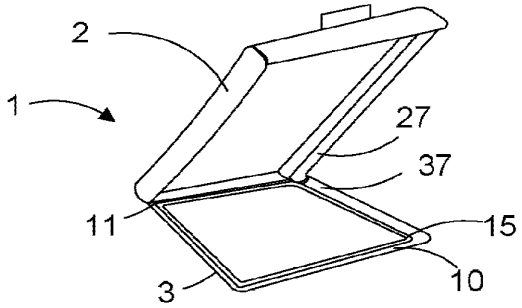

FIG. 20A

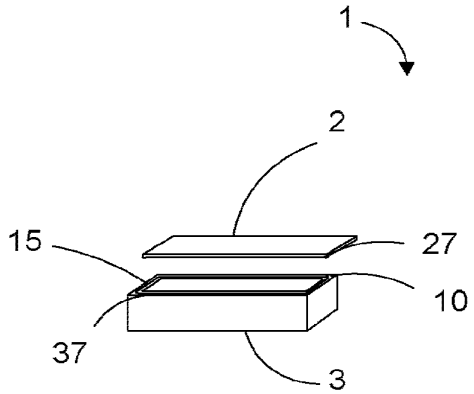

FIG. 20B

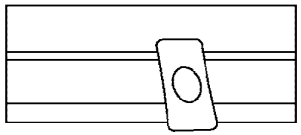

FIG. 20C

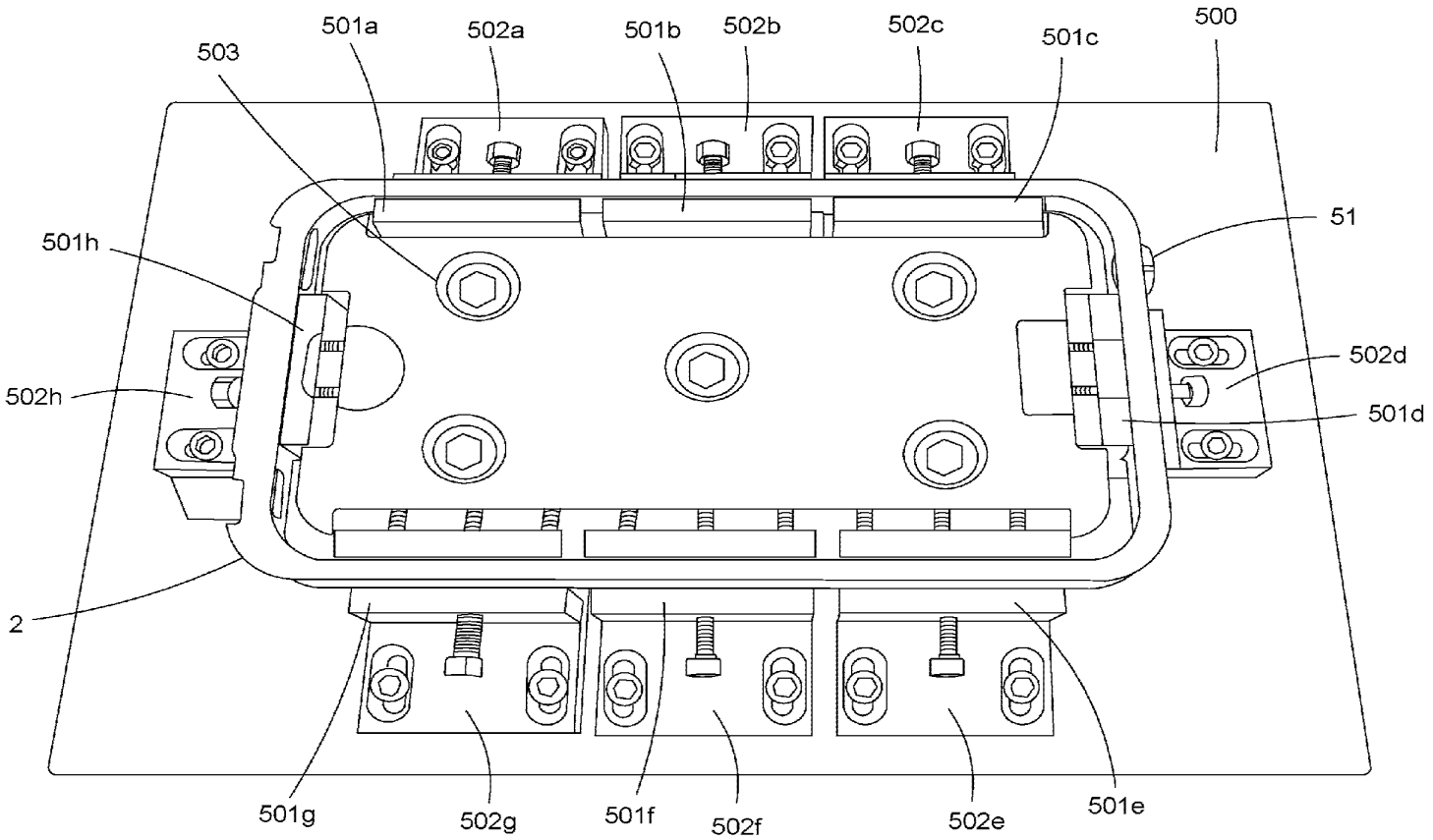
503
501a
502a
501b
502b
502c
501c
500
501h
51
502h
502d
501d
2
501g
502g
501f
502f
502e
501e

FIG. 21

HOUSING FOR RECEIVING AND ENCASING AN OBJECT

CROSS REFERENCE TO RELATED APPLICATIONS

This application claims priority from U.S. Provisional Application No. 61/392,361, with filing date of Oct. 12, 2010; U.S. Provisional Application No. 61/444,085, with filing date of Feb. 17, 2011; and U.S. Provisional Application No. 61/471,058, with filing date of Apr. 1, 2011. The disclosures of each of the applications cited in this paragraph are incorporated herein by reference in their entireties.

FIELD

This disclosure relates generally to a housing for protecting one or more objects, such as an object in need of protection from the elements, mishandling, and/or other mistreatment. For instance, in one aspect, the disclosure relates to a housing for protecting one or more components of a device or a device itself, such as an electronic device, for example, an electronic device with a touch screen interface, including but not limited to: a computer, a digital tablet computer, a mobile telephone, a personal digital assistant, video recorder, camera, and the like, or as indicated, one or more of the components thereof. In a further aspect, the disclosure relates to a housing for protecting a non-electronic object.

BACKGROUND

Rain, dirt, dust, mud, snow, and water in all of its forms can be damaging to various objects. Additionally, objects that are fragile or otherwise breakable can be damaged by mistreatment and/or other inappropriate handling, such as by dropping. It is, therefore, useful to have a housing within which an object in need of protection may be housed so as to protect it from inclement conditions, mistreatment, and/or inappropriate handling. Types of objects in need of such protection are electronic devices and/or the components thereof, precious items, perishable entities, and the like.

With respect to electronic devices, such devices are well known and widely used. For instance, a mobile telephone or tablet computer are electronic devices that are convenient tools that allow people to communicate with one another while on the go and away from traditional telephone landlines or internet connections. For instance, mobile devices allow people to communicate via voice, text message, short message service (SMS), instant messaging (IM), and the like. Other such portable devices include computers, personal digital assistants, electronic digital readers, electronic game devices, video recorders, cameras, and the like. While these devices may be portable and handy to use, they suffer from some drawbacks. For example, they are often expensive and contain fragile electronic components that make them prone to damage due to inclement weather and/or mishandling.

Accordingly, there is a need in the art for a mechanism whereby an object, such as a portable device, for instance, an electronic device and/or the components thereof, may be protected from inclement weather and/or errant handling and/or other damage that may result from contacting a fluid, such as water, dirt, dust, mud, snow, and the like. The present disclosure is directed to an apparatus and system for housing or encasing an object, such as a device and/or the components thereof, as well as methods for using the same, in a manner that offers protection for the device from adverse environmental conditions, inclement weather, mishandling and/or damage, such as from contacting a fluid, such as water. Systems for the same are also provided.

SUMMARY

In one aspect, a housing for encasing an object is provided. The object may be any object that is in need of protecting from one or more adverse environmental conditions, inclement weather, mishandling and/or damage, such as from contacting a fluid, such as water, and/or from droppage. The object may be a device, e.g., an electronic device, and the housing a casing within which the electronic device is housed; or the object may be a single component or several components of which the device, e.g., the electronic device, is comprised. For instance, the housing may be a housing within which an electronic device, such as a mobile phone or tablet computer, is to be fitted; or the housing may be the actual housing that encases the components of the mobile phone or tablet computer. The housing may be of any appropriate size and dimension so long as it is capable of housing the object and protecting it, for instance, from adverse environmental conditions and/or rough treatment.

In other instances, the object may not be an electronic device, but rather may be a fabricated material, such as a textile material; a manufactured material, such as a mechanical tool or instrument; a naturally occurring material; a synthesized material; a chemical or biological material; a processed material; a perishable material; a precious material; and the like. The housing may be in the form of any typical container known and used in the art for containing the particular object. For instance, the container may be a cargo or transport container configured for opening and closing, a suitcase, a briefcase, a messenger container, a food or drink container, a medicine container, first aid kit, a cooler container, a heating container, or any other form of container meant to contain an object or objects and prevent it or them from being damaged due to environmental factors and/or mishandling.

As indicated, in certain embodiments, the object to be contained is an electronic device, such as a mobile telephone, digital assistant, a computer, tablet computer, music player, GPS device, or the like; and the housing is configured for protecting the electronic device. In certain embodiments, the object to be contained is one or more, e.g., a plurality, of electronic components, such as electronic components that are configured for functioning together so as to perform a particular function, such as telephonic, computing, and/or photographic functions, and the housing is configured for containing the electronic component(s) of the object and protecting them as well as for assisting in the performance of the function of the electronic device. For example, where the electronic device is a mobile telephone, digital assistant, computer, etc. the components may be the components contained within the device that allow it to function in an appropriate manner. The housing, therefore, could be the actual housing of the mobile telephone, digital assistant, computer, etc. that typically houses the components, however, modified in the manner described herein below so as to be liquid proof and/or shock proof as described herein.

In one aspect the container is configured for containing a device, such as an electronic device, e.g., a mobile telephone, music player, GPS device, and the like. In such an instance, the container includes a housing wherein the housing is adapted for housing the device, e.g., the mobile telephone, music player, GPS device, etc. It is to be understood that although the following description is set forth with respect to describing the shape and size of a particular container for

housing a particular device, i.e., a mobile telephone device, the shape and size of the container and/or the object, e.g., device, to be contained can vary, for instance, as described above. Therefore, in one instance, a housing for housing a device, such as an electronic device, is provided.

The housing is configured such that the device may be fitted within the housing and be protected thereby, e.g., protected from rain, dirt, dust, mud, snow, water, shock, and the like. In certain instances, the housing may include a top member and a bottom member that may be removably coupled together so as to form the housing. In certain instances, the top and bottom members are separate components capable of being separably coupled together, such as, in various embodiments, by being snapped together. In other instances, the top and bottom members are formed of a single member made to be folded on itself in such a manner as to fit the device within a cavity formed thereby, such as without the inclusion of a hinge member. In other instances, the top and bottom members may be formed of a single or a plurality of members that are configured for being coupled together via a hinge component.

Each of the top and bottom members of the housing includes a front and a back surface surrounded by a perimeter portion. The perimeter portion is defined by a proximal and a distal end portion as well as opposing side portions. The perimeter portion may include a plurality of perimeter portions, such as an interior and an exterior perimeter portion, as described herein below.

In various embodiments, the top and/or bottom members of the housing may include a clasping mechanism. For instance, the top and bottom members may include respective clasping mechanisms that extend along at least a portion of the perimeter of the top and/or bottom member, which clasping mechanisms are configured for interfacing with one another in such a manner so as to couple the top and bottom members of the housing with one another thereby sealing the housing. In certain embodiments, the clasping mechanism circumscribes the entire perimeter portion of the housing. In other embodiments, the clasping mechanism is positioned along a perimeter portion of the housing but does not circumscribe the entire perimeter portion. In certain embodiments, the clasping mechanism includes a plurality of clasping mechanisms, one or more of which may or may not circumscribe the entire perimeter of the top and bottom members.

In certain embodiments, the clasping mechanism is an entirely internal clasping mechanism. By "entirely internal clasping mechanism" is meant that the clasping mechanism is entirely contained within the bounds that form the interior or cavity of the housing when the top and bottom members are coupled together so as to form the housing.

In certain embodiments, the clasping mechanism is an entirely external clasping mechanism. By "entirely external clasping mechanism" is meant that the clasping mechanism is positioned entirely on an exterior portion of the top and/or bottom member such that when the top and bottom members are coupled together so as to form the cavity of the housing the clasping mechanism is positioned exteriorly to the bounds that form the cavity of the housing.

In certain embodiments, the clasping mechanism is a hybrid clasping mechanism that is partially internal and partially external to the bounds that form the cavity of the housing. Accordingly, in certain instances, the perimeter portion may include one or more clasping mechanisms, such as internal, external, and/or hybrid clasping mechanisms that are configured so as to secure the sealing of the top and bottom members together. The clasping mechanisms may be separate elements added on to the perimeter portion of the housing, e.g., where the clasping mechanism is an external clasping mechanism, or may be an integral member therewith, e.g., where the clasping mechanism is an internal or hybrid clasping mechanism.

In certain embodiments, the clasping mechanism may include a plurality of clasping mechanisms such as one or more internal and/or one or more external and/or one or more hybrid clasping mechanisms. For instance, in various embodiments, the housing may include a plurality of internal clasping mechanisms and/or may include one or more external and/or hybrid clasping mechanisms. For example, the housing may include a first entirely internal clasping mechanism, e.g., one that circumscribes a portion or an entire perimeter of the housing; and may include a second entirely internal clasping mechanism, e.g., a second internal clasping mechanism that circumscribes an additional portion or entire perimeter of the housing. A further, external or hybrid clasping mechanism may also be provided.

Accordingly, in various embodiments, a single internal, external, or hybrid clasping mechanism may be provided; and in other various embodiments, a plurality of clasping mechanism, e.g., internal, external, and/or hybrid clasping mechanisms, may be provided. For instance, in certain embodiments, a plurality of internal clasping mechanisms are provided. The clasping mechanisms are configured such that when the top and bottom members are coupled together a liquid-proof seal is provided thereby which seal protects an encased device or components thereof from liquid, such as water.

In one embodiment, one or both of the top and bottom members may include a channel, such as a channel that extends along the perimeter portion of the top and/or bottom member. The channel along the perimeter portion may include an interior bounding member and an exterior bounding member, which bounding members at least partially define the bounds of the channel. Hence, in such an embodiment, the perimeter portion includes an interior perimeter portion, e.g., an interior bounding member; and an exterior perimeter portion, e.g., exterior bounding member. A bottom bounding member may also be provided. Accordingly, the perimeter portion may include an interior and an exterior perimeter portion, and in certain instances, the interior and exterior bounding members of the channel are the same as the interior and exterior perimeter portions of the top and/or bottom member. A portion of the bottom member may also provide a bottom bounding for the channel. The at least one channel may additionally include a gasket, such as a compressible O-ring, positioned within the channel.

In certain embodiments, where one top or bottom member includes a perimeter portion containing a channel, e.g., bounded by interior and exterior bounding members, the opposing member may additionally include a perimeter portion that includes an interior perimeter portion, such as a perimeter portion that interacts with the channel, e.g., so as to compress a gasket contained therein, and an exterior perimeter portion, which exterior perimeter portion may or may not interact with the channel. For instance, where the bottom member includes a perimeter portion having a channel bounded by interior, exterior, and/or bottom bounding members, the top member may include a perimeter portion that also includes interior and exterior perimeter portions, albeit without an intervening channel there between, which perimeter portions may be configured for interacting with one or more of the perimeter portions of the bottom member. For example, the interior and/or exterior bounding member(s) of the channel of the perimeter portion of the bottom member may include a clasping mechanism, and a corresponding

interior or exterior perimeter portion of the top member may include a corresponding clasping mechanism, such that when the top and bottom members are coupled together and the clasping mechanism clasped, e.g., snapped, together a liquid-proof seal is provided thereby. Accordingly, in various embodiments, the interior and/or exterior perimeter portions as well as the interior and/or exterior bounding members of the top and bottom members may include clasping mechanisms, e.g., corresponding clasping mechanisms, that are configured for interacting with one another so as to couple the top and bottom members together, e.g., in a liquid-proof seal.

In another embodiment, for instance, where the housing is intended to house a device with a screen, such as an interactive screen, the front and/or back surfaces of the top and/or bottom member of the housing may each include at least one or more membranes. For instance, the top or bottom member may include a membrane, such as a membrane that is configured for interfacing with an interactive screen, e.g., a touch screen, of an encased device in such a manner that when a user touches the membrane one or more characteristics of that touch are transferred to the touch screen of the underlying device, and in this manner a user is able to manipulate the screen of the encased device.

In certain embodiments, a front and/or bottom surface membrane is not provided or is provided as a separate element from the housing. For instance, in certain embodiments, a top and/or bottom member of the housing may include a perimeter portion only, which perimeter portion circumscribes the device to be encased but does not otherwise include a top and/or bottom surface element that spans from one perimeter portion to the other. In such an embodiment, the top and/or bottom member may be configured for interfacing with the perimeter of the top and/or bottom surface of a device to be encased in such a manner so as to provide a liquid and/or shockproof seal therewith. In certain embodiments, the top and bottom member of the housing may be formed of a single element or may be composed of separate elements. In certain instances, the top and bottom member may be adapted to interact with a separate top and/or bottom surface element, such as a top and/or bottom surface membrane member.

For instance, the top and/or bottom member may be configured for interacting with a surface membrane member in such a way that when the top and bottom member are coupled together, said coupling together secures the surface membrane across the surface of the top and/or bottom members. In other embodiments, the top and/or bottom member may be a single member that circumscribes the perimeter of the device to be contained, and further configured for interfacing with a separate surface membrane so as to provide a liquid proof seal therewith. For example, the surface membrane may span from one perimeter of a device to be encased to another and may include an adhesive that allows the surface membrane to securely attach to the surface of the device, while the perimeter portion fits over the perimeter of the device and may or may not interact with the surface membrane attachment, but together they function to make the device both liquid proof and shockproof. In certain embodiments, only a perimeter portion or only a front or back surface membrane portion may be provided.

As described herein below, one or more membranes or portions thereof may be included herein as part of the front and/or back surface of the top or bottom member or may be provided as the entire top and/or bottom member. The membrane may include a perimeter portion and/or may interact with a perimeter portion of the housing. Accordingly, the perimeter portion of the membrane may be configured so as to interface with a perimeter portion, such as an inner and/or outer perimeter portion, of the top and/or bottom member. For instance, the perimeter portion of a top and/or bottom member, such as the perimeter portion of a top member, may include a plurality of sub-portions, such as a first sub-portion, e.g., an interior perimeter portion, that includes an interior membrane interfacing member, and a second sub-portion, e.g., an exterior perimeter portion, that includes an exterior membrane interfacing member, which interfacing members are configured for interfacing with a front and back surface of a perimeter portion of the membrane, such as in an overmould fashion.

Accordingly, in certain embodiments, the membrane may be configured such that it spans from one side of the perimeter, e.g., of a top or bottom member, to another side of the perimeter in such a manner that the back surface of the membrane associates with at least the interior membrane interfacing member of the interior perimeter portion, and the front surface of the membrane associates with the exterior membrane interfacing member of the outer perimeter portion.

Hence, in some embodiments, such as where a front surface membrane is provided, e.g., on a top member, the membrane may completely cover the front surface of an electronic device when the device is encased within the housing, and in some embodiments, the membrane may cover less than the entire front surface, such as covering only a perimeter portion of the front surface thereby leaving the interactive touch portion of the front screen of the electronic device uncovered. In such an instance, the perimeter portion of the membrane may include a gasket so as to maintain the housing's overall waterproofness, such as a gasket that circumscribes the entire perimeter portion of the top member front surface membrane.

In other embodiments, a front and/or bottom surface membrane need not be provided. Rather, the perimeter portion of the top and/or bottom member may be configured for interfacing with an encased device in such a manner so as to make the perimeter portion of an encased device waterproof and shockproof. For instance, the perimeter portion may include a gasket that compresses against one or more of the surfaces of an encased device thereby preventing liquid from penetrating there between. One or more other gaskets may also be provided and configured as stickers that may be placed on or around an encased device so as to cover various different sound transmission ports of the encased device thereby rendering the encased device entirely waterproof. Such gasket covering stickers may be provided entirely on their own or in combination with a perimeter portion.

The membrane, e.g., a first membrane, may have one or more features, such as additional membrane features, for instance, an acoustic membrane feature and/or a button feature. For example, the first membrane may include an acoustic membrane feature, which acoustic membrane feature may include an aperture spanning from the front to the back surface of the first membrane. The aperture may be covered by a second membrane, such as an acoustically transmissive membrane that is offset from the first membrane. The acoustic membrane may be offset from the first membrane by any suitable element, such as by the addition of a spacer member. Accordingly, the two or more membranes may be attached to one another via a suitable adhesive.

The first membrane may additionally include a button feature. The button feature may include an indented region. The indented region may simply be an indented region in the first membrane or it may be a cut-out region that has been overlaid with an additional membrane. In various instances, the indented region is at least partially circumscribed by a ridge region. For instance, in one embodiment, the perimeter portion of the button feature may include a raised deformable

perimeter portion that surrounds the indented region. The raised deformable perimeter portion may be configured so as to allow a measure of travel for the indented region of the button feature such that when the indented region is depressed the raised portion is deformed thereby allowing the indented region to travel without causing significant stretching of the first membrane.

The first membrane may also include optically opaque regions and/or optically transmissive regions, such as an optically transmissive region coincident with a proximity sensor or video camera portion of an underlying device meant to be housed by the housing. In various embodiments, a front surface membrane may be configured so as to include an optical lens, which optical lens is configured for aligning with a camera or video lens of an encased device.

In an additional embodiment, along with a perimeter portion and/or a front surface membrane, a bottom member may be provided. The bottom member may be comprised simply of a perimeter portion or may include a bottom surface member that spans from one perimeter portion to the other. The bottom member may include one or more features. For instance, the bottom member may include a lens feature, such as a feature that includes one or more lenses, for instance, a camera and/or video lens and/or a flash lens. The lens feature may additionally include an optical skirt, such as a skirt that surrounds the one or more lenses and prevents the transmission of light there through from one lens region to the other lens region.

In a further instance, a perimeter portion, such as a distal end portion, may include a latch feature, for instance, a latch feature for enclosing an opening, such as a port opening. The latch feature may include a lower latch interface, a latch, and an upper latch interface, such that the latch is configured for moving from a closed position, where the latch is in contact with both the lower and upper latch interfaces, to an open position, where the latch is in contact with only one of the lower or upper latch interfaces. In certain instances, that latch feature may be positioned entirely on a top or bottom member, and in other instances, portions of the latch feature are included on both top and bottom members. In various embodiments, the latch feature is liquid-proof and/or dust-proof and may include a gasket so as to provide a liquid and/or dust proof seal when the latch is in the closed position.

In another instance, the perimeter portion, such as a distal or proximal perimeter end portion, may include one or more acoustic vent features for transmitting and/or channeling sound. For instance, an acoustic vent feature may include a sound channel having an acoustic vent material positioned therein. The acoustic vent material may span the sound channel at an angle from 0 to 180 degrees in a forward or reverse direction. The sound channel may extend from an exterior portion of the perimeter to an interior portion of the perimeter so as to permit the ingress and egress of sound there through, and the acoustic vent material may transect the sound channel, e.g., at an angle with respect to a centerline there through, so as to prevent the ingress (or egress) of water there through.

In one instance, the perimeter portion, such as one of the opposing side portions, may include a switch feature for engaging a switch mechanism of an encased device. The switch feature may include a switch housing and an actuator having a switch interface. The switch feature may additionally include an axle configured for being coupled to the switch housing and/or the switch interface. The switch feature may be configured such that as the actuator moves, such as rotates about the axle (if included), from a first position to a second position within the switch housing, the switch interface causes the switch to move from a first to a second position, such as from an "on" to an "off" position. In certain embodiments, one or more protective bumper portions may be positioned around the one or more switches or buttons so as to protect them from impact.

In another embodiment, an outer perimeter portion may include a slot feature, such as a coin slot feature, for assisting in separating the top member of the housing from the bottom member of the housing. The slot feature may include an indented or cut out portion of the perimeter. The cut out portion may be positioned in one or both of the top and bottom members. Accordingly, the cut out portion may be positioned on a top and/or bottom portion and is further bounded by one or a plurality of overhang regions, which overhang region or regions may be positioned in one or both of the top and bottom members thereby bounding the cut out portion. For instance, in one embodiment, the top member includes the cutout portion, and both the top and bottom member include corresponding overhang portions. A coin may be placed within the slot and twisted thereby causing the top member to move away from the bottom member.

In a further embodiment, the outer perimeter portion may include a noise cancelling feature for assisting in the cancelling of noise, such as ambient noise. The noise cancelling feature may include one or more of an aperture, e.g., positioned in one or both of the top and bottom member, an acoustic membrane, and a sound guide channel. The sound guide channel may traverse from the exterior of the housing to the interior of the housing and may be configured for directing sound from the aperture toward a noise cancelling feature, such as a microphone, present on an encased electronic device. The sound channel may be intersected by an acoustic membrane feature, which acoustic membrane may be positioned so as to intersect the sound guide channel at an angle with respect to a centerline there through. In certain embodiments, the acoustic membrane is transmissive for gas, e.g., sound waves, but not for liquid. Further, in certain embodiments, the interior portion of the noise cancelling feature may include a configuration that is adapted for preventing the transmission, e.g., refraction, of sound from within the case from entering the noise cancelling microphone of an encased device and thereby causing an echo. Such a feature may include a raised portion that circumscribes the noise cancelling microphone, when the device is encased within the housing, and may further include a gasket that circumscribes the same.

In an additional embodiment, the outer perimeter portion may include a port feature such as a headphone port feature, for instance, for receiving either a jack (such as a jack of a headphone or speaker assembly) or a closure device or the like. The port feature may include an aperture positioned in one or both of the top and/or bottom members. The aperture extends from the exterior of the assembly to the interior of the assembly. The aperture may be bounded by one or both of a gasket, such as an O-ring, and a threaded or cammed region, which threaded or cammed region may be configured for receiving a corresponding threaded or cammed region present on either the jack or the closure device to be inserted therein. The threaded region may be configured as a typical thread feature or may be configured as a cam feature.

The details of one or more variations of the subject matter described herein are set forth in the accompanying drawings and the following description.

BRIEF DESCRIPTION OF THE DRAWINGS

These and other aspects will now be described in detail with reference to the appended drawings. Like reference symbols in the various drawings indicate like elements.

FIGS. **1**A-**1**D provide various perspective views of the front, back, and side surfaces of a housing of the disclosure.

FIGS. **2**A-C provide perspective views of a housing of the disclosure including a front top and front bottom view.

FIGS. **3**A-**3**H provide perspective views of a latching mechanism of a housing of the disclosure.

FIGS. **3**I-**3**J provide a perspective view of another embodiment of a housing of the disclosure wherein the housing does not include a front surface membrane.

FIGS. **3**K-**3**M provide a perspective view of another embodiment of a housing of the disclosure.

FIGS. **4**A-**4**N provide various side views of different latching mechanisms for use in sealing a housing of the disclosure.

FIGS. **5**A-**5**D provide various views of a top member surface membrane of a housing of the disclosure.

FIGS. **6**A-**6**E provide various side cut-away views of a housing of the disclosure showing the interaction between the top surface membrane and perimeter portions of the housing as well as a suitable latching mechanism.

FIGS. **6**F-**6**H provide a perspective view of various features of a membrane of a housing of the disclosure.

FIGS. **7**A-**7**C provide a perspective view of a button feature and proximal portion of a housing of the disclosure.

FIGS. **8**A-**8**J provide various views of a lens feature of a housing of the disclosure.

FIGS. **9**A-**9**K provide various views of a latch feature positioned at a proximal end of a housing of the disclosure.

FIGS. **10**A-**10**K provide various views of a sound transmission portion positioned at a proximal end of a housing of the disclosure.

FIGS. **10**L-**10**M provide alternative close up cross section views of the acoustic vent assembly of FIG. **10***k*.

FIGS. **11**A-**11**G provide various views of a switch and button feature of a housing of the disclosure.

FIGS. **12**A-**12**D provide various views of a coin-slot feature of a housing of the disclosure.

FIGS. **13**A-**13**D provide various views of a noise cancelling feature of housing of the disclosure.

FIGS. **14**A-**14**D provide various views of an accessory port feature with closure device of a housing of the disclosure.

FIGS. **15**A-**15**G provide various views of closure device and a correspondingly configured port opening of a housing of the disclosure.

FIGS. **16**A-**16**F provide various views of a waterproof jack and a correspondingly configured port opening of a housing of the disclosure.

FIGS. **17**A-**17**I provide various views of an adapter for use with a housing of the disclosure.

FIGS. **18**A-**18**D provide various views of a closure element retaining device.

FIGS. **19**A-**19**K provide various views of another embodiment of a housing of the disclosure.

FIGS. **20**A-**20**C provide a perspective view of other containing elements and locking elements.

FIG. **21** provides a perspective view of a jig for use in producing a housing of the disclosure.

DETAILED DESCRIPTION

The subject matter described herein relates generally to a housing for encasing an object. It is to be understood that although the singular "object" is used herein, the term encompasses one or more objects. The object or objects may be any object that is capable of being fit within the housing and/or in need of protecting from one or more adverse environmental conditions, inclement weather, mishandling and/or damage, such as damage from contacting a liquid, such as water, or damage from dropping. The housing may be of any appropriate size and dimension so long as it is capable of housing the object and protecting it, for instance, from adverse environmental conditions and/or rough treatment. The object may be fabricated, e.g., a textile; manufactured; e.g., an electronic or mechanical device; synthesized; naturally occurring; processed; perishable, e.g., a food product; a precious item; and the like. The object may be a single object, like an electronic device, or may be a plurality of objects, such as components that make up an electronic device.

The housing may be in the form of any typical container known and used in the art for containing the particular object. For example, the container can be a cargo or transport container configured for opening and closing, a suitcase, a briefcase, a messenger container, a meal container, a medicine container, first aid kit, a cooler container, a heating container, a food or drink container, or any other form of container meant to contain an object and prevent it from being damaged due to environmental factors and/or mishandling.

In certain embodiments, the housing may be a case configured for encasing a device, such as an electronic device, for example, a mobile telephone device. In other instances, the housing is part of a device, such as an electronic device, which housing encases various components of the electronic device. For example, the housing may be the housing of a mobile device, or other electronic device, that encases the electronic components of the mobile device (or other electronic device).

Accordingly, in various aspects, a housing for encasing an object, such as device, methods of using the object, e.g., device, and/or systems for the same are provided. For instance, in one particular embodiment, a housing for encasing a device, such as an electronic device, is provided. The housing may be configured such that the device may be fitted within the housing and be protected thereby, such as from liquid or shock. The housing may include a plurality of separate members, such as a top member and a bottom member that are designed to be coupled together, or may include two members that are joined by a common member, e.g., a hinge member, which members are designed to come together around an object to be encased so as to form a liquid-tight seal. In certain embodiments, the housing may be comprised of a single member that is configured to be folded upon itself around the device to be encased, in such an instance, a portion of the member may comprise a top member and another portion of the member may comprise a bottom member.

There are several advantages achieved by the housings provided herein. For instance, in certain instances, a housing of the disclosure may provide a measure of shock absorbance for the protection of an encased device or components thereof. In certain instances, the housing may be configured to provide a measure of liquid-resistance for the protection of the encased device and/or components thereof. For example, in various instances, the housing may be shockproof and/or liquid proof. A housing as disclosed herein can also provide protection against the scratching, marring, chipping, breaking, fracturing, and the like of the underlying device or components thereof. In certain instances, the shock and/or liquid, e.g., water, resistance is provided while at the same time as maintaining the unique technical or design features of the encased device. In various instances, the housing is designed to increase the sound transmission qualities of the underlying device, e.g., for amplifying sound and/or sound quality. In some instances, these advantages are provided by the housing without substantially increasing the size and/or the weight of the underlying device.

For instance, in some embodiments, the dimensions of the housing fall within the following ranges. The thickness of the

various members, e.g., a top or bottom member, which members may be separate individual members capable of being coupled together, e.g., by snapping, joined by a common hinge, or a single member, and may have a thickness of about 25.4 mm or less, such as 20 mm or less, for instance, about 15 mm or less, including about 10 mm or less, such as about 8 mm, or about 5 mm, for instance, about 4 mm or less, including about 3 mm or about 2 mm or less, for example, about 1.5 mm or 1.0 mm or less, even about 0.1 mm.

For example, in various instances, such as where the device to be contained is a mobile telephone or PDA device, the thickness of a top and/or bottom member may be less than about 2.5 mm, such as less than about 2.0 mm, less than about 1.5 mm, for example, less than 1 mm thick, such as about 0.1 mm thick. Where the device to be contained is a mobile computer, such as a mobile tablet computer, electronic reader, or video display, the thickness of a top and/or bottom member may be less than about 5 mm, less than about 4.5 mm or about 4 mm, such as less than 3.5 mm or less than about 3 mm or less than 2.5 mm, such as less than about 2.0 mm, less than about 1.5 mm, for example, less than 1 mm thick, such as about 0.1 mm thick.

In certain instances, such as where the object to be contained is a mobile electronic device, the weight of a top and/or bottom member of the housing may be less than about 5 or about 4 ounces, such as less than about 4 or about 3 ounces, for instance, less than about 2 ounces or about 1 ounce, including less than about 28 or about 27 grams. Accordingly, in one embodiment, due to the design features described herein, a housing of the disclosure is capable of providing shock and liquid resistance to a housed device, while only having a thickness and/or weight in the range recited above.

Further, in certain instances, the length and/or width of the top or bottom member may be such that it is no longer or wider than about 10 mm of the underlying device it is designed to encase, no longer or wider than about 8 mm or about 5 mm, for instance, no longer or wider than about 4 mm, including no longer or wider than about 3 mm or about 2 mm than the device the housing is designed to encase. For example, in various instances, the length and/or width of a top and/or bottom member may be less than 2.5 mm, such as less than 2.0 mm, less than 1.5 mm, for example, less than 1 mm more than the length and/or width of the device the housing is designed to house. Accordingly, in certain instances, a housing of the disclosure is configured so as to be substantially form fitting with the device it is meant to contain.

In one embodiment, due to the design features described herein, a housing of the disclosure is capable of providing shock and liquid resistance to a housed device, while only having a relative length and/or width in the ranges recited above. Several formulas may be employed for determining an adequate width and/or length of a particular housing, and thus, may be easily ascertained by determining the width and/or length of the underlying device, x, and providing a housing that has a dimension, y, such as one of the dimensions recited above, that is in addition to the dimension of the underlying device. Specifically, if the dimension of the device is x, then the dimension of the housing will be (x+y), where y is one of the dimensions set forth above, such as about 0.5 mm, about 1 mm, about 1.5 mm, about 2 mm, about 2.5 mm, about 3 mm, about 3.5 mm, etc. thicker, wider, and/or longer than the housed device. An alternative formula for determining an adequate length, width, or thickness of a housing may be to measure the distance y from the interior of the housing, which contacts the encased device, to the exterior of the housing, wherein y is within one of the ranges recited above.

To ensure the appropriate thickness, length, and/or width and/or weight of the housing have been provided, the device may be fitted within the housing, then the housing closed, and the housing and/or seal thereof may be tested for its ability to provide shock and/or liquid resistance, such as by experimentally dropping the housed device and/or exposing it to wet conditions. See, for instance, the examples section below. The thickness, length, and/or width and/or weight of the housing should be provided in such dimensions so that the encased device is not broken, cracked, or otherwise damaged by the dropping and/or exposure to liquid, e.g., water in all its forms.

It is to be noted that in certain instances, the housing may be larger, e.g., substantially larger, than the object the housing is configured to house, such as where there is little or no utility for having the size of the housing tied to the object it is configured to house. For instance, where it is determined that it would be beneficial to have a housing that is substantially thicker, wider, and longer than an underlying device, than the dimensions of the housing may be thicker, wider, and longer than those dimensions recited herein, such as greater than about 10 mm or more or greater than about 5 or about 10 ounces or more. In other instances, the housing is not substantially larger and/or heavier than the device it is designed to encase. Accordingly, in certain instances, the housing protects the device from one or more of a shock, such as that caused by dropping the device, and/or from liquid, such as that caused from contact with a liquid, such as water, without being much thicker, wider, longer, or heavier than the device it is configured to encase.

In certain embodiments the top member and the bottom member of the housing are configured for being coupled together so as to from a waterproof and/or shockproof seal. By water-resistant or waterproof seal is meant that a seal is formed by the coupling of the top member with the bottom member which seal does not substantially allow the passage of liquid, e.g., water, from one side of the housing (e.g., outside of the housing) to the other side of the housing (e.g., inside of the housing).

As can be seen with respect to FIG. **1**A, the housing may include a plurality of members, such as a top member and a bottom member that are configured for being removably coupled together so as to form the housing **1**. It is to be understood that although a particular embodiment is presented herein, such as a housing **1** for encasing an electronic device, such as a mobile phone, therein, the object to be housed may be any of a number of different objects, as described above, and the housing may, therefore, have a number of different shapes, sizes, and configurations without departing from the nature of the disclosure. For instance, as herein depicted below, the housing may include two separate members, e.g., separate individual top and bottom members, that are configured for being removably coupled together so as to surround an electronic device and thereby encase the device. In certain instances, (not shown) the top and bottom members may not be separate members, but rather may be members that are joined, for instance, by a common hinge element, or a single member configured for being folded upon itself and thereby forming the housing. Hence, the scope of the housings and systems described herein with respect to the particular embodiments set forth in reference to the figures is not intended to be unduly limiting.

Accordingly, with respect to FIG. **1**B, in particular embodiments, the housing **1** may include a top member **2** and a bottom member **3** that when removably coupled together form the housing **1**. The top and bottom members may be fabricated from any suitable material but typically are fabricated from materials that are capable of providing one or

more of shock and liquid resistance to an encased device when the top and bottom members are properly coupled together. In certain embodiments, the top and bottom members may be composed of various different components and therefore may be fabricated from a plurality of different materials. Suitable materials from which the top and bottom member may be fabricated include rigid, semi-rigid, and flexible materials that may be fabricated together so as to provide shock and/or liquid resistance to the housing. Such materials may include but are not hereby limited to plastics, metals, polycarbonates, nylon, liquid crystal polymers, and/or rubber, thermal plastic urethanes, polyethylenes, and/or polypropylenes, mixtures thereof and the like.

As can be seen with respect to FIGS. **1**A and **1**B, the top member **2** of the housing **1** includes a front surface **25***a* and a back surface **25***b* that is surrounded by a perimeter portion **20**. The perimeter portion **20** is defined by a proximal end portion **21** and a distal end portion **22** as well as opposing side portions **23** and **24**. The perimeter portion **20** may include a plurality of additional features, such as an "on" and "off" switch **16**, a headphone port sealing member **53**, button protection elements **12** *a* and b, which protection elements are configured for protecting a switch element **90** and button features **99***a* and **99***b*, as well as a latch door **71**, which may be positioned in between sound inlet/outlet apertures **11***a* and **11***b*. The front and back surfaces of the top member may be composed of the same material or different materials which materials may be the same or different from the material or materials of the perimeter portion. In certain embodiments, the front **25***a* and back **25***b* surface of the housing **1** are comprised of at least one membrane.

Additionally, a bottom member **3** of the housing **1** includes a front **35** and a back **36** surface surrounded by a perimeter portion **30**. The perimeter portion **30** is defined by a proximal and a distal end portions **31** and **32** as well as opposing side portions **33** and **34** respectively. The front and back surfaces of the bottom member may be composed of the same material or different materials which materials may be the same or different from the material or materials of the perimeter portion. In certain embodiments, the front **35** and back **36** surface of the housing **1** are comprised of at least one membrane. In other instances, the front **35***a* and a back **35***b* surface of the housing **1** is formed of a semi-rigid material, such as polypropylene, that is capable of vibrating in such a manner that it amplifies the sound characteristics emitted from an encased device. As depicted the front surface **35***a* of the bottom member **3** includes standoffs **16**. These standoffs may be positioned anywhere along the front surface **35***a* of the bottom member, or they may be positioned in such a manner so as to create an audio channel so as to increase the transmission and/or amplification of sound, for instance, be creating an air gap between the front bottom surface **35***a* and a back surface **135** of a housed device. Such an air gap can both channel sound away from the housing **1** and may further amplify sound by reflecting off of the two surfaces.

FIG. **1**C provides a housing **1** including a top member **2** and a bottom member **3** prior to being fitted around an electronic device **100** to be fitted therein. As depicted, the top **2** and bottom member **3** are aligned with respect to a device **100** to be contained within the housing **1**, prior to them being fitted around the device and snapped together. Also depicted are top **2** and bottom **3** members as they would be subsequent to being coupled together around device **100**. FIG. **1**D provides a perspective view of the housing **1** of FIG. **1**C this time from a bottom up view.

Depicted are the top **25** and bottom surface **35** as well as perimeter portions **20** and **30** of the housing **1**. The top **25** or bottom **35** surface may include one or more features, such as an acoustic membrane feature **44** and/or a button feature **40**. One or more of the outer perimeter portions **20** and/or **30** may also include features. For instance, an outer perimeter portion, e.g., **20** or **30**, may include a slider switch **90**, one or more button features **99** *a, b*, and/or a latch feature **71**. As depicted, the slider switch **90** and button features **99** *a, b* are positioned on the top member **2**, and the latch feature **71** spans from the bottom member **3** to the top member **2**. In other embodiments, one or more of these positions may be reversed.

FIG. **1**D provides a perspective view of the bottom back surface **36** and perimeter portions **20** and **30** of the housing **1**. The bottom back surface **36** may include one or more features, such as a camera portion **80**, which camera portion **80** may include a plurality of sub-portions, such as an optical skirt **82**, a camera lens **84**, and/or a flash lens or orifice **86**.

FIG. **2**A provides a perspective view of an assembled housing **1**, wherein a device to be encased therein is not present. The top front and back surface **25** *a,b* and outer perimeter portion **20** of the top member **2** as well as the bottom front surface **35** and perimeter portion **30** of the bottom member **3** are depicted. In this embodiment, the top front and back surface **25** is composed of a single translucent membrane. Accordingly, the bottom front surface **35** of the bottom member **3** is seen through the translucent membrane **25** of the top member **2**. A portion of the translucent membrane **25** may be configured so as to include one or more opaque regions, such as towards the perimeter of the membrane, which opaque region circumscribes a visibly translucent area. An opaque region may be entirely opaque or may include optically transmissive sub-regions.

As depicted, the top membrane **25** includes a plurality of features. For instance, the top membrane **25** includes a button feature **40**, optically clear regions **47** and **48**, e.g., corresponding to a video camera portion and a proximity sensor portion of an encased device, respectively; and an acoustic membrane portion **44** including apertures **46** for transmitting sound. Apertures **46** are prevented from passing liquid there through by the presence of a waterproof gasket **45**, which gasket is permissive to sound but not to liquid. Such a gasket may be comprised of several different water phobic materials such as GoreTex® and the like. As depicted, the outer perimeter portion also includes a plurality of features including a plurality of speaker sound transmission portions **60** and a latch feature **70** including a latch cover **71** for covering a charge port. Also depicted are stand-offs **16** which may be included on the bottom front surface **35** so as to allow separation between and encased device and the bottom member, for instance, for greater shock absorbance and enhanced sound transmission.

FIG. **2**B provides an up close view of the front top portion of the housing **1** of FIG. **2**A. The top front surface **25** comprises a transparent membrane that includes an opaque perimeter. As illustrated in this embodiment, the top front membrane **25** includes an acoustic membrane portion **44**, including an aperture **46**, e.g., for transmission of sound through an acoustic vent **45**, an optically clear region **47**, configured for being used in conjunction with a video camera of an underlying device, and another optically clear region **48**, configured for being used in conjunction with a proximity sensor of an underlying device. It is to be noted that if desired, the optically clear region **47** may be configured to include a lens **80**, which lens may be aligned with a camera lens of an underlying device.

FIG. **2**C provides an up close view of a front bottom portion of the housing **1** of FIG. **2**A. The bottom portion of the front

surface **25** comprises a membrane which includes a button feature **40**. The membrane **25** is transparent but includes an optically transmissive portion and an opaque perimeter that is not optically transmissive. Also depicted are sound transmission portions **60** *a* and *b* and a perimeter latch feature **70** both of which, in this embodiment, are positioned at the proximal end **21**,**31** of the housing **1**.

The front and/or back surfaces of the top and/or bottom member of the housing include a perimeter portion. In certain embodiments, the perimeter portion of the top and/or bottom member may include a plurality of sub-portions. For instance, the perimeter portion of a top member **2** may include an interior **20***a* and an exterior **20***b* perimeter portion, which perimeter portions may be configured for interacting with different portions of a top member membrane **25**. In certain embodiments, the perimeter portion of a bottom member **3** may include an interior **30***a* and an exterior **30***b* perimeter portion. In certain instances, one or both of the interior **30***a* and exterior **30***b* portions may form an interior bounding member and an exterior bounding member which together may in turn form a channel **10**. As depicted, the channel **10** is positioned on the bottom member **3**, but this configuration may alternatively be included on the top member **2** and vice-versa.

The perimeter portion of a top and bottom member, or a sub-portion thereof, may be fabricated from any suitable material. The perimeter portion may be fabricated from the same material as a top and/or bottom surface member or may be fabricated from one or more different materials than the top and/or bottom surface members. For instance, in various instances, such as when there is an interior and exterior perimeter portion, such as on a top member, the interior perimeter portion may be fabricated from a rigid material, such as a rigid plastic, polycarbonate, or the like, so as to provide structural integrity to the housing, whereas the outer perimeter portion may be fabricated from a more flexible, e.g., semi-rigid or flexible material, such as a polyethylene or polypropylene material, or the like, so as to provide the perimeter of the housing with a measure of shock absorbance and protection.

Hence, in certain instances, as depicted in FIG. **2**D, the top member includes a more rigid interior perimeter portion **20***a* that is coupled with a more flexible exterior perimeter portion **20***b*. The rigid interior perimeter portion **20***a* provides structure to the top member of the housing, while the flexible exterior perimeter portion **20***b* of the housing provides shock absorbance. As depicted the interior **20***a* and exterior **20***b* perimeter portions are integrally formed together, such as in the manufacturing process, but in other embodiments they may be two separate elements that are capable of being coupled together after the manufacturing process. Accordingly, in some embodiments, the top member **2** may include a perimeter portion **20** that includes a rigid skeletal frame **20***a*, such as a polycarbonate frame, which frame is further associated with, e.g., is overmoulded with, a more flexible material, such as a rubber or a urethane material such as a polyethylene or the like, so as to form an exterior perimeter portion **20***b*.

Further, in certain instances, a perimeter portion of a top or bottom member may include an interior and exterior bounding member. For instance, as depicted in FIG. **2**D, bottom member **3** includes a perimeter portion **30**, which perimeter portion **30** further includes an interior bounding member **30***a* and an exterior bounding member **30***b*. The interior and exterior bounding members may be fabricated from the same or different materials, such as a rigid material, like a rigid plastic, or the like, or a semi-rigid material, such as a polypropylene material, so as to provide structural integrity to a channel positioned between the interior and exterior bounding members of the bottom member of the housing. The interior **30***a* and exterior **30***b* bounding members my be configured in such a manner so as to form a channel **10** there between.

Hence, in one embodiment, one or both of the top and bottom members may include a channel, such as a channel that extends along at least a portion of the perimeter portion of the top and/or bottom member. It is to be noted that with respect to this instance, the top and bottom members may be separate members configured for being removably coupled together, or they can be a single or a plurality of members joined by a hinge element. The channel may comprise an interior bounding member and an exterior bounding member, which bounding members may at least partially define the bounds of the channel. The channel may further include a gasket, such as an o-ring, positioned within the channel.

In certain instances, the interior and exterior bounding members may run along a portion or the entire perimeter of the top and/or bottom member of the housing. As depicted in FIG. **2**D, the interior **30***a* and exterior **30***b* bounding members forming channel **10** circumscribe the entire perimeter portion **30** of bottom member **3**. One or both of the interior or exterior bounding members may include a clasping mechanism that also runs along a portion or the entire perimeter of the top and/or bottom member. In this instance, the exterior bounding member **30***b* runs along the entire perimeter of the bottom member **3** of the housing **1**. The exterior bounding member **30***b* includes a clasping mechanism **37** that also runs along a portion or the entire perimeter of the bottom member. It is to be noted that where an interior or exterior bounding member of a channel, e.g., of a bottom member, includes a clasping mechanism, the opposing member of the housing, e.g., top member **2**, may also include a clasping mechanism **27** that is configured for interacting with the clasping mechanism **37** on the interior or exterior bounding member of the bottom member **3**.

The clasping mechanisms of the top and bottom member may have any suitable configuration so long as they are capable of interacting with one another in such a manner so as to couple the top member of the housing with the bottom member of the housing. In certain instances, this coupling is in such a manner so as to provide a liquid-proof seal between the top and bottom members of the housing.

Accordingly, as can be seen with respect to FIG. **2**D, the top **2** and bottom **3** members of the housing **1** may include corresponding clasping mechanisms **27**, **37** that extend along the perimeter portion of the top and bottom member, which clasping mechanisms may be configured for interfacing with one another in such a manner so as to couple the top **2** and bottom **3** members of the housing with one another thereby sealing the housing.

The clasping mechanism may extend around the entire perimeter of the housing members or a portion thereof. For instance, the clasping mechanisms may extend around about 99% or more, about 95%, about 90%, about 85%, about 80%, about 75%, about 70%, about 65%, about 60%, about 55%, about 50%, about 40%, about 30%, about 25%, about 20%, about 10%, or less of the perimeter, such as where the top and bottom members are joined by a suitable hinge element. For instance, where a top or bottom member includes an interior or exterior perimeter portion and/or a channel bounded by an interior or exterior bounding member, the interior and/or exterior perimeter portion may be configured such that a portion thereof forms the clasping mechanism.

In certain embodiments, the clasping mechanisms may be configured such that they lessen and/or remove the deflection that would be typical when coupling the two members of the

housing together when employing a classic latching mechanism known in the art. For instance, when employing a typical latching mechanism known in the art, e.g., one that clasps at single point along a perimeter portion, deflection often occurs as a result of a latching mechanism that only exerts a closing force on discrete locations on the opposing surfaces. Such a latching mechanism leaves substantial gaps between the various tensioning points. A configuration such as this results in deflection as the two parts of the housing work against each other, because these tensioning points between the gaps are where the opposing forces get integrated and therefore are maximized.

In certain instances, the present housing and features thereof are configured for constraining these oppositional forces. For instance, the top or bottom members of the housing may include opposing clasping mechanism that are configured for dispersing these oppositional forces along the length of the housing thereby minimizing the deflection that may be caused by the sealing of the two members of the housing. In certain instances, one or both of the top or bottom member includes a channel, such as a channel that contains a gasket, a portion of which channel may include a clasping mechanism that is configured for dispersing the opposing forces throughout the channel.

For example, as depicted in FIG. **2**D, a channel **10** may be included within a member of the housing, e.g., bottom member **3**, which channel **10** is configured so as to constrain the oppositional forces caused by clasping the members of the housing **2** and **3** together within the channel **10**. In such an instance, the oppositional forces can be constrained to the small space of the channel and further be minimized by a tight coupling of the clasping mechanisms of the top and bottom members **27** and **37**, respectively. This is especially beneficial where a gasket **15**, such as an o-ring, is included in the channel **10** so as to further compress the gasket and thereby generate a liquid-tight seal.

Gaskets of different sizes may be included so as to facilitate a liquid-tight sealing of the housing. A gasket may be positioned wherever a watertight sealing is beneficial, such as within channel **10**. The inclusion of such a gasket, however, creates additional opposing forces as the gasket resists the compression caused by the coupling together of the two members of the housing. The clasping mechanism, therefore, may be configured to be substantially continuous along a substantial circumference of the perimeter so as to better disperse these oppositional forces. Such a continuous, circumferential clasping system may wrap around the entire or a substantial portion of the circumference of the device, minimizing transitional gaps and dispersing the oppositional forces that build up in gaps between tensioning points.

A unique feature of the perimeter portion clasping mechanisms herein depicted with respect to FIG. **2**D is that they are entirely internal to the housing **1**. By "entirely internal to the housing" is meant that the corresponding clasping mechanisms **27** and **37** are entirely within the bounds of the housing **1** such that when the top member **2** is coupled to the bottom member **3** (See FIG. **1**B), the corresponding clasping mechanisms **27** and **37** are contained within the inside of the housing and not exterior thereto, e.g., the clasping mechanisms may be positioned along the inside of the perimeter of the housing **1**. Additional latching elements, such as external latching mechanisms, can further be included, e.g., along an outside perimeter of the housing, so as to further ensure that a liquid-tight seal is provided. Additional internal latching mechanisms may also be provided.

Accordingly, a clasping system of the disclosure can provide a small cross section that solves the problems of: how to close/assemble the housing and keep it joined together, how to minimize the material necessary to make the housing (so thicker materials are not required in order to resist the band inflection), and ensuring the gasket, e.g., O-ring, is suitably compressed between the two case housings, thereby creating a liquid-proof and seamless seal.

As set forth above, a plurality of clasping mechanisms both internal and/or external may be included as part of the housing. For instance, the housing may include one or a plurality of internal clasping mechanisms and/or one or a plurality of external clasping mechanisms. As explained below, the clasping mechanisms may have a variety of different configurations. For example, the top and bottom members may each include an internal clasping mechanism that is configured as opposing catches or hooks and/or extended portions and grooves, which clasping mechanisms circumscribe an internal portion of the perimeter of the top and bottom members. Alternatively, or in addition to the opposing catch mechanisms, the top and bottom member may include an internal clasping mechanism that is configured as male and female counterparts, e.g., teeth and holes. Additionally or alternatively the housing may include an external clasping mechanism that may have any suitable configuration such as a clip or peg and slot configuration. One or more of these configurations are detailed further herein below.

In certain instances, the perimeter of the housing may include one or more additional features, such as an earphone port. In such an instance, it may be beneficial for a perimeter portion, such as an internal perimeter portion having a clasping mechanism associated therewith, to have an altered configuration so as to compensate for the space occupied by the additional perimeter feature.

For instance, as can be seen with respect to FIG. **2**D, in certain embodiments, the perimeter portion **30** of the bottom member **3** includes a channel **10** defined by an interior **30***a* and exterior **30***b* bounding member. The channel **10** may have at least a portion of a gasket **15** therein, such as an O-ring, as well as a clasping mechanism **37**, e.g., associated with the exterior **30***b* (or interior) bounding member. In such an instance, the exterior **20***b* (or interior) perimeter portion of the top member **20** may include a respective clasping mechanism **27** configured for being coupled to the clasping mechanism **37** associated with the exterior bounding member **30***b* of the bottom member **3**. Where an additional feature, such as a port feature **50**, is further included along the perimeter portion **30** of the bottom member **3**, the perimeter portion **30** and clasping mechanism **37** of the bottom member **3** may have a configuration, such as a raised portion, that is adapted to accommodate the additional feature, e.g., port **50**.

For example, the perimeter portion may include an increased length region, e.g., an upper lip ridge region, which region runs along a portion of the perimeter, such as along a corner region thereof. This upper ridge lip region may be configured as a ramp up. Where the ramp up is included along with a channel having a gasket therein, the ramp up will extend beyond the height of a gasket fitted within the channel. Such a feature results in a transition with a step up/step down configuration which thereby allows the top and bottom members to be joined in a manner sufficient to form a tight seal without the additional perimeter feature, e.g., earphone port, interfering with the sealing of the housing.

Specifically, an upper lip ridge feature may be included so as to allow the clasping mechanisms to clear the additional perimeter features. Such a step up/down may be positioned anywhere along the perimeter where there are features that need to be avoided, but may be of particular use around the corners of the housing. Hence, in various embodiments, an

upper lip ridge feature may be included so as to allow the consistent coupling, e.g., snapping, of the top and bottom members together without having to add substantial additional material to the width or thickness of the housing member, e.g., so as to compensate for the additional perimeter feature/gasket interaction.

Additionally, such upper ridge lip features may be included along the corners of the perimeter of the housing so as to ensure better sealing regardless of whether additional features are provided. Such upper ridge lip features, therefore, may allow the closing of the housing in such a way that there is not a gap in the closure and thus the seal will be continuous. Because the seal, in this embodiment, is a continuous seal, it is able to snap down all around the circumference of the housing.

As can be seen with respect to FIG. **3**A, the front **25** and back **35** surfaces of the top **2** and bottom **3** members of the housing **1** include a perimeter portion **20** and **30**, respectively. As depicted, the top member **2** includes a perimeter portion **20**. The perimeter portion **20** includes an interior perimeter portion **20***a* and an exterior perimeter portion **20***b*. The interior perimeter portion **20***a* is composed of a rigid material, such as a polycarbonate material, and is configured for associating with an enclosed device so as to secure the device within the housing **1** and to dampen the transference of shock from the outer side of the housing to the interior of the housing. The exterior perimeter portion **20***b* is composed of a flexible material, such as TPE, and is positioned above and along a side of the interior perimeter portion **20***a*. The outer perimeter portion **20***b* may function to absorb shock due to impact.

The interior **20***a* and exterior **20***b* perimeter portions may be fabricated together, such as in an overmould process, or be fabricated separately and joined together. For instance, in certain embodiments, the outer perimeter portion **20***b* may be removable from the interior perimeter portion **20***a*. In other instances, the interior **20***a* and exterior **20***b* perimeter portions are fabricated together along with the front surface membrane **25**, when included, in such a manner that the interior perimeter portion **20***a* associates with a bottom surface of the membrane, the exterior perimeter portion **20***b* associates with a top surface of the membrane. In such a manner as this, the membrane **25** may be integrally associated with the perimeter portion **20** of the top member **2**.

A benefit of this overmould process may be the generation of a flexible protective rim, e.g., composed of the flexible TPE perimeter portion **20***b*, that circumscribes the perimeter portion **20** of the top member **2** and/or the membrane **25**. It is to be noted however that such a rim may be fabricated and associated with the perimeter portion **20***a* of the top member **2** in other ways not involving such an overmould process. Additionally, in other instances, the front surface membrane **25** may be attached to an interior perimeter portion **20***a* of a top member **2** through the application of an adhesive, such as a temperature or pressure activated adhesive. In such an instance, the membrane **25** may be attached to a top surface of the perimeter portion **20***a* or a bottom surface thereof. A flexible outer perimeter portion **20***b* may then be added in either an integrated fixed manner or a removable manner. It is further noted, that in various embodiments, the interior bounding member **20***a* includes a clasping mechanism **27**.

The bottom member **3** includes a perimeter portion **30**. The perimeter portion **30** also includes an interior perimeter portion **30***a* and an exterior perimeter portion **30***b*. In this instance, the interior perimeter portion forms an interior bounding member **30***a* and the exterior perimeter portion forms an exterior bounding member **30***b*. Together the interior and exterior bounding members **30** *a, b* bound a channel **10**. The exterior bounding member **30***b* includes a clasping mechanism **37**.

The clasping mechanisms **27** and **37** can have any configuration so long as either clasping mechanism is capable of interacting with the corresponding clasping mechanism. In this instance, clasping mechanism **27** on top member **2** interacts with corresponding clasping mechanism **37** on bottom member **3** so as to provide a seal thereby, such as a liquid-tight seal. Hence, clasping mechanism **27** of the top member **2** is configured for interacting with a corresponding clasping mechanism **37** of the bottom member **3**, which clasping mechanisms are configured for coupling the top and bottom members together, such as in a liquid-proof sealing.

As depicted, the clasping mechanism **37** is associated with exterior bounding member **30***b* of the bottom member **3**, and the clasping mechanism **27** is associated with interior perimeter portion **20***a* of top member **2**. It is to be noted, however, that clasping mechanism **37** may be associated with interior bounding member **30***a* of the bottom member **3**, and the clasping mechanism **27** may be associated with exterior perimeter portion **20***b* of top member **2**. The channel **10** further includes a gasket **15**, such as an O-ring gasket. In this embodiment the clasping mechanisms **27** and **37** are configured as corresponding catches but may have other configurations, such as a rib with extended protrusion member and groove configuration, and the like. It is to be noted, that in this embodiment, the clasping mechanisms **27** and **37** are entirely internal clasping mechanisms. By "entirely internal clasping mechanisms" is meant that the clasping mechanisms are configured for being coupled together in such a manner that when the top and bottom members are coupled together and the housing formed, the clasping mechanisms are entirely internal to the outer bounds of the housing, e.g., they are internal to the housing, such as contained within an internal cavity within the housing. Such internal clasping mechanisms are internal to the housing and not observable by looking at the external perimeter portion.

It is to be noted that although the bottom member perimeter portion **30** is depicted as having bounding members **30***a* and **30***b*, and the top member perimeter portion **20** is depicted as having interior and exterior perimeter portions **20***a* and **20***b*, in certain instances, the top member perimeter portion **20** may have bounding members, e.g., **20***a* and **20***b*, bounding channel **10**; and the bottom member perimeter portion **30** may have interior and exterior perimeter portions, e.g., **30***a* and **30***b*, which do not bound a channel.

Also depicted is a plurality of spacer elements on bottom member **3**. These one or more spacer elements create acoustic space within the housing for the amplification of sound and further perform the function of increasing shock absorbance. Additionally, such structures can be configured as tensioning elements that may be used to increase the tension on a front membrane **25** when an electronic device to be housed is inserted within the housing **1**. For instance, the tensioning elements may be adapted such that as a device is inserted into the housing **1**, it presses against the tensioning elements, causing the perimeter portion **20** to press outwards thereby increasing tension on the front membrane **25** attached to the perimeter portion **20** consequently causing the screen to flatten and making for a more responsive user interface.

FIG. **3**B illustrates a cross-sectional view of the catch clasping mechanisms of the top **2** and bottom **3** members of FIG. **3**A. The top member **2** includes an interior perimeter portion **20***a* and an exterior perimeter portion **20***b*. In this embodiment, the interior perimeter portion **20** is fabricated from a rigid material, such as a rigid plastic or polycarbonate,

and includes top clasping mechanism **27**. The rigid plastic provides a structure for the housing **1**. The rigid plastic material of the interior perimeter portion **20***a* is overlaid with a more flexible, e.g., semi-rigid material, such as rubber, TPE, or the like, which material forms the outer perimeter portion **20***b*, which material may be included so as to provide protection, e.g., against shocks, to the housing.

As set forth above, the top clasping mechanism **27** of the interior perimeter portion **20***a* of the top member **2**; and the bottom clasping mechanism of the exterior perimeter portion, e.g., bounding member **30***b*, may have any suitable configuration. However, in this instance, the top and bottom clasping mechanisms **27** and **37** are configured as corresponding catches. Accordingly, the clasping mechanisms includes a catch or lip region.

The catch region **27** includes a slanting surface **28** that is intersected by an intersecting surface **29**. Together the slanting surface **28** and the intersecting surface **29** form an edge, or lip, that comprises the catch clasping mechanism **27** of the top member **2**. The slanting surface **28** and intersecting surface **29** form an angle. Additionally, the catch region **37** includes a slanting surface **38** that is intersected by an intersecting surface **39**. Together the slanting surface **38** and the intersecting surface **39** form an edge, or lip, that comprises the catch clasping mechanism **37** of the bottom member **3**. The slanting surface **38** and intersecting surface **39** form an angle. For instance, the slanting surfaces may slope with respect to the intersecting surface at a degree that ranges from 0 to about 90 degrees, such as from about 5 or about 10 degrees to about 80 or 85 degrees, for instance, from about 15 or 20 degrees to about 70 or 75 degrees, such as from about 30 or 40 degrees to about 50 or 60 degrees, including about 45 degrees.

Accordingly, the catch clasping mechanism **27** of the top member **2** is configured for engaging a corresponding catch clasping mechanism **37** of bottom member **3**. The corresponding clasping mechanisms may have corresponding surfaces, e.g., lip or edge regions or may have different, but complimentary surfaces. In this instance, the top member **2** has a perimeter portion **20** having a catch clasping mechanism **27** that includes a lip or edge region that comprises a slanting surface **38** that is intersected by an intersecting surface **39**. The bottom member **3** has a perimeter portion **30** having a catch clasping mechanism **37** that also includes a lip or edge region that comprises a slanting surface **38** that is intersected by an intersecting surface **39**. In this embodiment, the corresponding lip or edge regions are configured for being coupled together. It is to be noted that although a particular configuration of clasping mechanisms **27**, **37** are depicted, e.g., as corresponding catch clasping mechanisms, other configurations may also be suitable, for instance, where the slanted surfaces **28** are straight or substantially straight, etc. For example, in one embodiment, one of a top or bottom member may have a clasping member configured as described above, e.g., having a lip edge region, and the corresponding member may have a clasping member that is configured as a receiving element, such as a groove, e.g. a circumferential groove, that is adapted for receiving the corresponding lip edge of the opposing member.

However, in this instance, the slanting surface **38** and the intersecting surface **39** comprise the clasping mechanism **37** of the bottom member **3**, which clasping mechanism is configured for engaging corresponding surfaces of the top member **2** clasping mechanism **27**. Together the top and bottom clasping mechanisms **27** and **37** respectively form opposing snap closures that are configured for interacting with one another in such a manner that when they are coupled together, e.g., snapped together, they seal the housing, for instance, in a liquid-proof seal. It is to be noted in this embodiment, the clasping mechanisms **27** and **37** are entirely internal clasping mechanism that circumscribe the entire perimeter of the housing. Although the top and bottom clasping mechanisms have been described herein with respect to one particular configuration, e.g., entirely internal and circumscribing the entire perimeter portion, it is to be understood that this configuration is a non-limiting example and may be modified in various ways so long as the clasping mechanisms are capable of being joined together in a manner sufficient to couple the top and bottom members together and thereby seal the housing.

FIG. **3**C illustrates another embodiment of a representative clasping mechanisms of the top and bottom members. The top member **2** includes a perimeter portion **20**. The perimeter portion **20** includes an interior perimeter portion **20***a* and an exterior perimeter portion **20***b*. As depicted the interior perimeter portion **20***a* of the top member **2** includes a clasping mechanism **27**. It is to be noted that although the interior perimeter portion **20***a* includes the clasping mechanism **27**, in certain embodiments, the exterior perimeter portion **20***b* may include the clasping mechanism **27**.

The top member clasping mechanism **27** includes a surface **28**, which surface is depicted as slanted. It is to be noted that although this surface is depicted as slanted, in certain embodiments, it may have a different configuration, for instance, it may be substantially straight. The top surface clasping mechanism **27** also includes an intersecting surface, which in this instance is also an interfacing surface **29**. The interfacing surface **29** is depicted as a horizontal surface that intersects surface **28**. However, this configuration may be modified so long as a suitable clasping mechanism is formed thereby. In this manner a lip or edge is formed, which edge is configured for interfacing with a corresponding clasping mechanism, e.g., a lip edge or groove member, of a bottom member so as to couple and seal the top and bottom members together.

The bottom member **3** also includes a perimeter portion **30**. The perimeter portion **30** includes an interior bounding member **30***a* and an exterior bounding member **30***b*, which bounding members bound channel **10**. As depicted the exterior bounding member **30***b* of the bottom member **3** includes a clasping mechanism **37**. However, in other instances, the interior bounding member **30***a* of the bottom member **3** may include the clasping mechanism **37**.

The bottom member clasping mechanism **37** includes a surface **38**, which surface is depicted as slanted. It is to be noted that although this surface is depicted as slanted, in certain embodiments, it may have a different configuration, for instance, it may be substantially straight. The bottom surface clasping mechanism **37** also includes an intersecting surface which in this instance is also an interfacing surface **39**. The interfacing surface **39** is depicted as a horizontal surface that intersects surface **38**. It is to be understood that the configuration of these surfaces may differ from that depicted so long as it is capable of forming a clasping mechanism for interfacing with a corresponding clasping mechanism on the top surface **2**. In a manner such as this a lip or edge is formed, which edge is configured for interfacing with a corresponding edge of a top member so as to couple and seal the top and bottom members together. It is to be noted that although the exterior bounding member **30***b* includes the clasping mechanism **37**, in certain embodiments, the interior bounding member **30***b* may include the clasping mechanism **37**. It is also to be noted, that one of the top or bottom clasping mechanisms may have a configuration as a receiving member, such as a groove, rather than the lip edge configuration described above.

Also depicted is channel **10**. Channel **10** is formed in part by the interior and exterior bounding members **30***a, b* as well as the bottom back surface **36** of the bottom member **3** perimeter portion **30**. It is to be noted that although as depicted the channel **10** is included as part of the bottom member **3**, in certain embodiments, the channel can be included as part of the top member **2**, with the corresponding changes being made to the structures of the top and bottom members. The channel **10** includes a gasket **15**, such as an O-ring, which at least partially fills the channel **10**.

The interior perimeter portion **20***a* with the clasping mechanism **27** of the top member **2** is configured for being inserted into the channel **10** and may further be configured for engaging the gasket **15**; and may additionally be configured for engaging the clasping mechanism **37** of the exterior bounding member **30***b* of the bottom member **3** in such a manner as to couple the top and bottom members together, for example, in a liquid-proof seal. In this embodiment, therefore, the interior perimeter portion **20** *a* includes a gasket interfacing portion that is configured for interfacing with the gasket in such a manner as to compress the gasket and thereby from a liquid-proof seal.

It is to be noted that in certain embodiments a gasket need not be present within the channel. Further, in certain embodiments, the interior and/or exterior bounding members may be configured differently or not included at all. A different clasping mechanism may be included, e.g., a separate clasping mechanism that is external or distinct from the perimeter portions of the top and bottom members, although the clasping mechanism as depicted herein has certain advantages over such an external clasping mechanism. Nevertheless, an external clasping mechanism may be provided, such as a clamp or other form of external clasping mechanism. Such an external clasping mechanism may be included in addition to the internal clasping mechanisms described herein or in substitution therefore.

For instance, FIG. **3**D illustrates a further embodiment of a suitable clasping mechanism of the disclosure. In this embodiment, the clasping mechanism is depicted in conjunction with a coin slot feature, which feature is described in greater detail herein below. The perimeter portion **20** of the top member **2** includes an interior perimeter portion **20***a* and an exterior perimeter portion **20***b*. In one embodiment, the interior perimeter portion **20***a* is fabricated from a rigid material, such as a plastic, polycarbonate, metal, or the like, so as to provide stability and structure to the perimeter portion **20** of the top member **2**. In one embodiment, the exterior perimeter portion **20***b* is fabricated from a malleable material, such as an elastomeric material, such as rubber, TPE, polyethylene, polypropylene, and the like so as to provide flexibility and/or shock absorbance to the perimeter portion of the top member.

The perimeter portion **30** of the bottom member **3** includes perimeter portion **30** having an interior bounding member **30***a* and an exterior bounding member **30***b* which along with a bottom back surface member **36** form a channel **10**. In one embodiment, the interior bounding member **30***a* is fabricated from a semi-rigid material, such as a plastic, or polypropylene material, or the like, so as to provide stability and structure to the perimeter portion **30** of the bottom member **30**, while maintaining flexibility. Additionally, the exterior bounding member **30***b* may also be fabricated of the same or a different semi-rigid material, such as a plastic, or polypropylene material, or the like from which the interior bounding member is made. However, in certain instances, the exterior bounding member **30***b* may be fabricated or overlaid with a more flexible material, such as flexible or semi-flexible material, for instance, a rubber or polyethylene material.

The bottom back surface **36** may also be fabricated from the same rigid material, such as polypropylene, as the material from which the interior and/or exterior bounding members are made. The interior and exterior bounding members **30** *a,b* along with the bottom back surface **36** form the channel **10**. Channel **10** includes a compressible gasket **15**, which gasket may be compressed when contacted with a gasket interfacing region of the top member, e.g., an interior perimeter portion of the top member.

As depicted in FIG. **3**D, the configuration of the top and bottom members **2**, **3** is such that when they are coupled together a coin-slot feature **18** is formed. The coin slot feature is formed as a cut out **18**. A portion of the top member **2** exterior perimeter portion **20***b* forms a top bounding member **17** of the coin slot feature **18**. Further, an extended portion of the bottom perimeter portion **30***b* of the bottom member **3** includes a bottom bounding member **19** of the coin slot feature **18**.

Accordingly, the perimeter of the housing may include a coin slot feature **18** that is comprised of a top bounding member **17**, e.g., an overhang portion of a perimeter portion, and a bottom bounding member **19**, e.g., an extended portion of a perimeter portion. In certain embodiments, the coin slot feature **18** is included within a single perimeter portion of a top or bottom member, and in other embodiments it is formed by the joining of the top and bottom member. In various embodiments, the coin slot feature is a cut out in one or both perimeter portions of the top and bottom members. The coin slot feature is configured such that a tool may be inserted therein and employed so as to de-couple the top and bottom members and thereby detach and de-seal the top and bottom members one from the other.

Other clasping mechanisms may also be employed with respect to joining the top and bottom members of the housing together in addition to or in substitution for those detailed above. For instance, as can be seen with respect to FIG. **3**E, a housing **1** of the disclosure may include a top member **2** and a bottom member **3**. The housing **1** may additionally include an external latch feature **5**. This external latch feature **5** may be included in addition to the clasping mechanisms described above or may be included in substitution therefore.

The external latch feature may be an entirely external latch feature, such as one or more clamps or clamp regions. The one or more clamps can be positioned on the outside of the housing and configured for clamping down and thereby exerting a coupling force onto the top and bottom members so as to couple the two members together and seal the housing. Alternatively, the external latch feature may be a hybrid external/internal latch feature such as that depicted in FIG. **3**E.

As depicted in FIG. **3**E, the external latch feature **5** may be included on one or more sides, e.g., two or four opposing sides, of the housing **1**. Accordingly, a plurality of latch features **5** may be included and positioned around the perimeter of the housing **1**. For example, sides **23**, **33** and **24**, **34** may each include 1 or 2 or 3 or more latch features **5**. The latch feature **5** may extend along the entire perimeter portion or one or more sections thereof.

As can be seen, the latch feature **5** includes two interfacing regions **6** and **8**. As depicted the top member **2** includes latch region **6**, and bottom member **3** includes latch region **8**. However, the top member **2** may include latch region **8**, and bottom member **3** may include latch region **6**. Latch region **6** includes one or more pegs **7**, and latch region **8** includes one or more corresponding peg receiving members **9**. Specifically, the latch region **6** of top member **2** includes one or more pegs **7**,

which peg(s) **7** is configured for being received within a peg receiving member **9** of latch region **8** of bottom member **3**. As depicted, latch region **6** includes a plurality of pegs **7**, which pegs **7** are configured for being received within a plurality of peg receiving members **9** of latch region **8**. Accordingly, as the top member **2** is coupled to the bottom member **3**, the pegs **7** are received within the peg receiving members **9** thereby sealing and/or adding an additional seal to the housing **1**.

As described above, the perimeter portion **20** of top member **2** may include an interior perimeter portion **20***a* and an exterior perimeter portion **20***b*. The latch region **6**, therefore, may be formed out of one or both of the interior and exterior perimeter portions **20***a* and **20***b* of top member **2**. For instance, a portion of the exterior perimeter portion **20***b* and the interior perimeter portion **20***a* may together make up latch region **6**. For example, the exterior perimeter portion **20***b* that makes up part of latch region **6** may include a concave or cutout region, which cutout region exposes the interior perimeter portion **20***a*. The exposed interior perimeter portion **20***a* that makes up part of latch region **6** may include the pegs **7**.

Accordingly, the latch region **6** may include a concave portion that is a cutout region of exterior perimeter portion **20***b*. For instance, in an instance where the exterior perimeter portion **20***b* of top member **2** is comprised of a flexible material that overlays a rigid framework that comprises the interior perimeter portion **20***a* of top member **2**, the concave region of exterior perimeter portion **20***b* may be a cutout region in the flexible material of perimeter portion **20***b*. The cutout region may expose the interior perimeter portion **20***a*, which perimeter portion may include one or more pegs **7**. For instance, in an instance where the interior perimeter portion **20***a* of top member **2** is comprised of a rigid material, the rigid material may also include one or more pegs **7** that are exposed by the cut-out region in perimeter portion **20***b*. The peg(s) **7** may be configured for being received within one or more complementary peg receiving members **9** positioned in the latch region **8** of bottom member **3**, so as to aid in coupling the top member **2** and bottom member **3** together in the formation of the housing **1**.

The peg(s) **7** and peg receiving member(s) **9** may be configured such that when the pegs **7** are received within the peg receiving members **9** the latch regions **6** and **8** of the perimeter portions **20** and **30** are flush with the rest of the perimeter portion **20** and **30**. In certain instances, the peg(s) **7** and/or peg receiving member(s) **9** may be sized so that the latch regions **6** and **8** are not flush with the rest of the perimeter portions **20** and **30** but are extended or indented. For example, in certain instances, the pegs **7** on the top member **2** may be positioned on the exterior perimeter portion **20***b* or positioned on the interior perimeter portion **20***a* but sized such that they extend outward therefrom away from the perimeter portions **20***a* and **20***b*. The corresponding latch region **8** on bottom member **3** may therefore include extended peg receiving members **9**. This, for instance, could be useful when thicker and longer pegs are employed so as to form an extra secure seal.

Hence, the latch region **6** of top member **2** may be formed in part from a cutout region of the exterior perimeter portion **20***b* that exposes the interior perimeter portion **20***a*. The pegs **7** of latch region **6** may be formed as a portion of the interior perimeter portion **20***a* and may be fabricated of a rigid material, such as a stiff plastic, polycarbonate, metal, or the like. The pegs **7** may be formed so as to be integral with, e.g., of the same material as, the interior perimeter portion. Additionally, the latch region **8** may be formed as a laterally lengthened region of the exterior bounding member **30***b* of the bottom member **3**. The laterally lengthened region **8** may include peg receiving members **9**. As can be seen with respect to FIG. **3**E, the laterally lengthened region **8** may be configured for fitting within the cutout region **6** such that the perimeter portions **20** and **30** are flush along their length. As set forth above, one or more of the latch regions **5** and **8** may be configured such that the perimeter portion is not flush along its length.

The cutout region of the latch region **6** of the top member **2** and the laterally lengthened region of the latch region **8** of the bottom member **3** are configured such that as the top member **2** is coupled to the bottom member **3**, the laterally lengthened region **8** is fitted within the cutout region **6**, the pegs **7** are fitted within the peg receiving apertures **9**, and the housing is further sealed by the coupling of the latch region **6** with the latch region **8**. It is to be understood that although this latching feature **5**, e.g., additional latching feature, has been described with respect to the particular embodiment provided in FIG. **3**E, it is to be understood that other configurations for latching the top member with the bottom member and thereby sealing the housing can also be employed without departing from the nature of this disclosure.

The front surface **35** of the bottom member **3** may include stand-offs **16** that are of a size and position so as to generate air-channels between the housed device and the bottom member **3**. The air channels are adapted to channel and transmit sound through the housing and out through one or more sound ports **60** *a* and b, or other sound transmission surfaces, such as a front or back surface of the housing (as described below), thereby enhancing the quality and clarity of sound transmission from an underlying device through the housing **1**.

In certain instances, the housing **1** may be configured to enhance the sound quality of sound transmission of an underlying device. For instance, the top front surface membrane **25** of the housing **1** may be configured so as to include an air-gap **12** that may be positioned between the housing **1**, e.g., membrane **25**, and a housed sound emitting device. The air gap **12** may be positioned along a perimeter portion of the top member and may circumscribe the entire or a portion of the perimeter, and may be adapted so as to be in communication with one or more sound ports **60** of the housing **1**.

To further enhance sound transmission, the bottom member **3** of the housing **1** may be fabricated of a rigid or semi-rigid material, such as polypropylene, that is capable of resonating and thereby amplifying the sound generated by an encased device. As depicted, the bottom member **3** includes a bottom surface having a bottom member front surface **35** and a bottom member back surface **36**.

FIG. **3**F provides a perspective view of the top **2** and bottom **3** members of the housing **1**. As can be seen with respect to FIG. **3**F, the top member **2** includes a perimeter portion **20** and a front membrane **25**. The front membrane **25** includes an optically opaque region and an optically clear region. The top surface of the bottom member **3** and standoffs **16** positioned thereon may be seen through the optically clear region.

FIGS. **3**G and **3**H provide a perspective view of the top **2** and bottom **3** members of the housing **1**. As can be seen with respect to FIGS. **3**G and **3**H, the top member **2** includes a perimeter portion **20**. The perimeter portion **20** includes an interior perimeter portion **20***a* and an exterior perimeter portion **20***b*. The bottom member **3** includes a perimeter portion **30**. The perimeter portion **30** also includes an interior perimeter portion **30***a* and an exterior perimeter portion **30***b* wherein the interior and exterior perimeter portions bound a channel **10**. Accordingly, the interior perimeter portion of the bottom member **3** comprises an interior bounding member **30***a*, and the exterior perimeter portion of the bottom member **3** comprises an exterior bounding member **30***b*, which bounding members **30***a* and **30***b* bound the channel **10**.

As can be seen with respect to FIGS. **3**G and **3**H, the housing **1** further includes an interior clasping mechanism **27** and **37**. As depicted, the interior clasping mechanisms **27** and **37** are an entirely internal clasping mechanism. In this instance, the entirely internal clasping mechanisms **27** and **37** circumscribe the entire internal circumference of the perimeter of the housing **1**, however, in other instances, the clasping mechanisms **27** and **37** need not circumscribe the entire perimeter portions of the top **2** and bottom **3** members. These entirely internal clasping mechanisms **27** and **37** effectively seal the housing in such a manner that the seal is internal to the housing. As depicted, the entirely internal clasping mechanism is configured as a catch and groove clasping mechanism, e.g., clasping mechanism **27** of top member **2** is configured as a circumferential hook or catch element that fits into the clasping mechanism **37** of bottom member **3**, which is configured as a circumferential groove that is adapted for receiving the hook element of the top member and locking the two housing members together so as to form the housing **1**.

Specifically, in this embodiment, the top member **2** includes an internal clasping mechanism catch or hook **27**, and the bottom member includes a corresponding internal clasping mechanism groove **37**. The top catch **27** and bottom groove **37** are configured for being coupled together so as to seal the housing members **2** and **3** one with the other. It is to be noted that although the entirely internal clasping mechanism **27** has been set forth herein in a certain embodiment, other variations to the entirely internal clasping mechanism **27** and **37** can be provided without departing from the nature of this disclosure. For instance, in certain instances, the clasping mechanism need not circumscribe the entire perimeter portion of the top and/or bottom member, need not be entirely internal, and may be configured differently from the catch and groove configuration set forth herein.

In addition or as an alternative to one or more of the clasping mechanisms set forth herein above, e.g., clasping mechanisms **27** and **37**, the housing may include an entirely internal clasping feature having a different configuration than the hook and groove clasping mechanisms described above. For instance, as depicted with respect to FIG. **3**F, the housing **1** may include a tooth and receptacle clasping mechanism **13**. As depicted, this tooth and receptacle clasping mechanism **13** may be in addition to the hook and groove clasping mechanisms **27** and **37**, or in other instances, it may be substituted therefore.

The entirely internal tooth and receptacle clasping feature **13** of FIGS. **3**G and **3**H may include one or more sections of one or more teeth **13***a*. The entirely internal clasping feature **13** may also include one or more sections of one or more teeth receiving members **13***b*. The tooth or teeth **13***a* may be configured for interfacing with the tooth or teeth receiving members **13***b* in such a way that as the teeth **13***a* are coupled with the teeth receiving members **13***b*, the top member **2** and bottom member **3** are coupled together so as to form the housing **1**.

For instance, in certain embodiments, the teeth **13***a* may be positioned along a perimeter portion of a top **2** or bottom **3** member, and the corresponding top or bottom member will have the corresponding teeth receiving members **13***b*. In this instance, the teeth **13***a* are positioned along a perimeter portion **20***a* of the top member **2**, and the teeth receiving members **13***b* are positioned along a perimeter portion **30***a* of the bottom member **3**. However, in other instances, the teeth **13***a* may be positioned along a perimeter portion **30** of the bottom member **3**, and the teeth receiving members **13***b* may be positioned along a perimeter portion **20** of the top member **2**.

As depicted with respect to FIGS. **3**F and **3**G, there are three teeth regions positioned along the perimeter portion **20***a* of the top member **2**. Each teeth region may include one or a plurality of teeth. In this instance, each teeth region **13***a* includes a plurality of teeth. The teeth **13***a* extend laterally and internally toward the internal cavity of the housing away from the longitudinal length of the interior perimeter member **20***a* of the top member **2**. The teeth **13***a* are configured for being received within corresponding teeth receiving members **13***b* of the bottom member **3**.

Consequently, as depicted, there are three teeth receiving regions **13***a*, positioned along the interior perimeter, e.g., interior bounding member, **30***a* of the bottom member **3**. As depicted, the teeth receiving members **13***b* are configured as apertures within which the teeth **13***b* may be fitted. Accordingly, as the top member **2** is coupled to the bottom member **3** the teeth **13***a* of the three teeth regions interface and engage with the corresponding teeth receiving members **13***b* of the three teeth receiving member regions of the bottom member **3**. Consequently, the housing **1** is therefore formed by the coupling of the top member **2** with the bottom member **3** and sealed by the clasping mechanisms **27** and **37** as well as clasping mechanisms **13***a* and **143***b* joining together. It is noted that in various embodiments, either clasping mechanisms **27** and **37** or **13***a* and **13***b* may be provided individually by themselves or in combination as depicted in FIGS. **3**G and **3**H. Additionally, although clasping mechanisms **13***a* and *b* have been described herein as being positioned around the perimeter portion in 3 different regions, they can be so positioned in more or less than three regions, so long as they are capable of providing a liquid proof and shock proof sealing thereby.

Accordingly, it is to be noted that the teeth and teeth receiving members may have any suitable configuration so long as they are capable of interacting with one another so as to couple the top and bottom members of the housing together. Hence, the number, size, and location of the teeth and/or corresponding teeth receiving members may vary. For example, one long tooth or several short teeth may be included. The teeth may be positioned along the entire perimeter portion or any number of sub-portions thereof. As depicted, there are three teeth regions positioned along three sides of the top member. However, the teeth can be positioned on the bottom member instead of the top member and/or where desired one, two, three, or more teeth regions can be included along one, two, three, or more sides of the top or bottom member.

Likewise, one long tooth receiving member or several short teeth receiving members may be included. The teeth receiving members may be positioned along the entire perimeter portion or any number of sub-portions thereof. As depicted, there are three teeth receiving member regions positioned along three sides of the bottom member. The teeth receiving members are configured so as to correspond to and interact with the teeth members so as to secure and seal the housing when the top and bottom members are coupled together. It is to be noted that the teeth and/or teeth receiving members can be positioned on either or both of the top or bottom members as well as on the interior or exterior perimeter portions, as desired.

FIGS. **3**I and **3**J provide another embodiment of a housing **1** of the disclosure, however, in this instance, the top member **2** does not include a front membrane **25**. Rather, an additional gasket **15***b* is provided between the interface of a perimeter portion **20** and the front surface **125** of a housed device **100**. This additional gasket **15***b* functions to prevent liquid from

entering through the top housing member where the housing interfaces with the front screen **125** of a housed device.

Specifically, the housing includes a top member **2** and a bottom member **3** that are configured for being coupled together, as described above, so as to form the housing **1**. However, it has been found that the clamping force generated by the top and bottom member clasping mechanisms, as described herein, is sufficient to create a liquid proof seal at the top member device interface, such that a top surface membrane **25** is not necessary. The inclusion of an additional gasket, or even an adhesive, at the top member device interface, is sufficient to produce a water and dirt proof seal.

Accordingly, as depicted in FIGS. **3**I and **3**J, the top surface of the top member **2** includes a top surface perimeter portion **20***c* that at least partially circumscribes a top perimeter portion of the top member **2**. This top surface perimeter portion **20***c* may be fabricated from any suitable material such as a rigid or semi-rigid plastic, such as polycarbonate. It may cover a larger or a smaller portion of the top surface of the top member, but typically does not cover the entire top surface. Rather, a windowless window region is provided so that a user may have direct access to the touchscreen of an underlying device.

As can be seen with respect to FIGS. **3**I and **3**J the gasket circumscribes a substantial portion, e.g., an entire portion, of the perimeter portion **20***c* thereby providing a circumferential seal between the perimeter portion **20***c* and the front screen of a housed device. For instance, as the top member **2** is coupled to the bottom member **3**, the clasping force is sufficient to compress the gasket **15***b* between the perimeter portion **20***c* and the front screen of a housed electronic device thereby generating a liquid and dirt proof seal there between. The gasket **15***b* may be attached to the top member **2**, e.g., to the top surface perimeter portion **20***c* by an sufficient mechanism, such as by the addition of an adhesive.

It is noted that in this embodiment, the top surface perimeter portion **20***c* would cover a substantial perimeter portion of a housed electronic device, so as to cover the non-capacitive interactive front screen portion of a typical housed device. These non-capacitive interactive portions of the housed device typically include additional features such as button feature **140**, sound outlet feature **144**, video lens feature **147**, and proximity sensor **148**. Accordingly, the top surface perimeter portion **20***c* may be configured to include corresponding feature elements, as described herein, to allow these underlying functionalities of a housed device to continue to function. For instance, the top surface perimeter portion may include one or more of additional features such as button feature **40**, sound outlet feature **44**, video lens feature **47**, and proximity sensor **48**, as described herein. For example, with respect to button feature **40**, the button element **40** may be comprised as a cutout region in the top surface perimeter portion and a gasket portion **15***b* that has been formed to fill the aperture created by the cutout region. The top surface perimeter portion **20***c* may be optically clear, optically opaque, a mixture of the two, and/or screen printed so as to include one or more decals. Further, as depicted the gasket member **15***b* circumscribes the entire top surface perimeter portion **20***c*, however, in certain instances, it need not circumscribe the entire perimeter portion.

FIGS. **3**K-**3**L provide another embodiment of a housing of the disclosure. In this embodiment, there are three different housing elements that may be applied to device to be housed individually or in combination, each adding a different layer of protection. For instance, as can be seen with respect to FIG. **3**K, in certain embodiments, a housing **1** of the disclosure may be composed simply of a top member **2**, which in this instance, is comprised of a membrane. The membrane **2** includes several portions that are designed to be attached to an electronic device **100** and folded there around so as to provide a modicum of shock and scratch resistance for the underlying device, e.g., to a front or back surface thereof, and also to provide waterproof protection.

As depicted, the housing **1** includes several features that may or may not be included in a final embodiment. For instance, in certain instances, the membrane **2** may include a face, form fitting portion **25** that is configured to be attached to the front screen portion **125** of an electronic device **100**. It further may include a plurality of internal or edge perimeter portions **20***a*, which internal perimeter portions **20***a* are configured for being attached to side edges of an underlying device **100**. It may additionally include a plurality of external perimeter or back portions **20***b*, which external perimeter portions **20***b* are configured for wrapping around and covering a back portion **135** of a housed device.

The membrane **2** may include a plurality of additional feature elements as described herein. For instance, the internal perimeter edge portions **20***a* of membrane **2** may include a bumper portion, such as a portion comprised of a flexible material, such as a rubber or TPE material. Further, the edge portions **20***a* may include formed button **99** *a* and *b* or switch features, which features may be formed into the membrane **2** or the side bumper portions, if included. The front surface of the membrane **25** may include one or more of a button feature **40**, a sound transmission portion **44**, a proximity sensor portion **48** and/or or a video or camera portion **47**. These portions may be formed into the membrane **25** in a manner such as that described above. In certain instances, for instance, the home button element **40** may simply be an formed indented region on the front surface membrane **25** or it may be an added feature such as a rubber or TPE formed button. The membrane **2** may additionally include top **22** and/or bottom **21** foldable regions, which regions may be configured for folding over top or bottom edge portions **22** and **21** respectively.

It is to be noted that although the membrane **2** is depicted as having side wing portions **20***a* and **20***b* as well as top and bottom foldable portions, in various embodiments, one or more of these portions may be omitted or configured differently. For instance, in certain instances, the top **22** and bottom **21** foldable portions and/or the side wing portions **20** *a* and b, need not be included. In other embodiments, the side wing and/or top and/or bottom foldable portions are provided, but the front membrane portion **25** is omitted. When included, the top and bottom foldable portions **22** and **21** may be configured to cover various features of an underlying device **100**, such as a headphone **150** or charge port **170** feature, or they may include openings coincident with the same, and thus be configured to interact with one or more plug or cover elements (such as those described herein) that are designed to be fitted within the port feature and interact with the membrane **2** so as to provide a liquid and/or dirtproof sealing of the port feature, such as described above.

The membrane **2** may be configured for being attached directly to an electronic device to be housed, or it may be employed in combination with one or more other structural elements. For instance, in various instances, the membrane **2** may be adhered directly to an electronic device **100** to be housed, e.g., via an adhesive or static pressure or the like, or it may be attached to an external framework **3**, such as that provided in FIG. **3**L, which framework **3** is coupled to the electronic device **100** prior to the application of the membrane **2** to the framework **3**. In such an instance, the housing

1 would be comprised of a bottom member framework 3 to which a top member membrane 2 is attached so as to form the housing 1.

As can be seen with respect to FIG. 3L, in certain embodiments, a housing 1 of the disclosure may be composed simply of a perimeter framework member 3, which in this instance, is comprised of a rigid or semi-flexible material, such as polycarbonate, polypropylene, TPE, rubber, and the like. The framework 3 includes several portions that are designed to be coupled to an electronic device 100 and/or folded there around so as to provide a modicum of shock and scratch resistance, such as to the edges, of the underlying device, and may also provide a modicum of waterproof protection.

As depicted, the housing 1 includes several features that may or may not be included in a final embodiment. For instance, in certain instances, the framework 3 may include a form fitting top 32 and bottom 31 member, which members are configured for being fitted over a distal and proximal portion of an underlying electronic device 100. The proximal 31 and distal 32 cap members may be comprised of a rigid or semi-rigid or flexible material so as to be formfitting to the proximal and distal portions of the electronic device to be housed. The proximal 31 and distal 32 cap members may additionally include one or more features so as to accommodate corresponding features of an underlying device 100. For instance, a proximal 31 or distal 32 end portion may include one or more of an accessory, e.g., headphone, inlet port 50, a sound transmission port 60, a charger port 70, and the like. These features may be formed into the housing member as described herein.

In various instances, the framework member 3 may additionally include a back member 35, which back member may be integral with the end cap members 31 and 32, such as where the framework member is composed of a flexible or semi-flexible material, or may otherwise be attachable thereto, e.g., where the framework member is composed of a rigid material such as polycarbonate. As depicted the back framework member 35 does not cover the entire back portion of a housed device 100 or the side portions. However, in various embodiments, the framework member 3 may include a back member 35 that covers a substantial portion if not the entire back portion and/or may include perimeter, e.g., side edge, portions as well. As depicted, the back member 35 further includes a window portion and further includes a lens portion 80 with a camera and flash lens set therein.

The framework member 3 may be configured for being attached directly to a device 100 to be housed and used by itself as a housing 1 or it may be configured for being used in conjunction with one or more other housing elements, such as in conjunction with one or more of a membrane, e.g., front membrane, portion 2, and/or with a an over-framework portion 4, such as that provided with respect to FIG. 3M.

FIG. 3M provides an external framework feature 4 that may be employed as a housing 1 by itself or in combination with a membrane 2 and internal framework portion 3, as described herein. As depicted, the external framework portion 4 includes a back member (not shown), which back member is configured for cradling an electronic device 100 to be housed and/or for interacting the membrane 2 and internal framework 3 so as to do the same. The back member includes a plurality of clip portions, which clip portions are configured for wrapping around respective edges of a device 100 to be housed therein. In this instance, there are five clip portions, a distal clip portion 4*a*, proximal clip portions 4*b* and 4*c*, as well as side clip portions 4*d* and 4*e*. Although 5 clip portions are provided herein, in other instances 1, 2, 3, 4, 6, or more clip portions may be provided. The external framework portion 4 may be fabricated from any suitable material, such as a rigid, semi-rigid, or even flexible material. However, in this instance the external framework member 4 is composed of a semi-rigid material that is capable of flexing in such a manner that the clip portions may be snapped over the edges of a device 100 so as to be retained therein. The back member may also be configured for being associated with one or more other features, such as a belt clip member, a bike clip member, an armband member, and the like. It may also include a cut out portion to accommodate a lens portion or speaker or microphone portion of an underlying device.

As mentioned, the membrane 2, internal framework member 3, and external framework portion 4 are configured for either being used separately, e.g., by being directly attached to a device 100, or may be used in combination with one or both of the others. Accordingly, one or more of the housings disclosed herein can be packaged separately or together for instance as a kit.

FIG. 4 provides several different variations for a housing of the disclosure. FIG. 4A provides a top member 2 having a clasping mechanism 27, and a bottom member 3 having a clasping mechanism 37. In this embodiment, the top member 2 and bottom member 3 may be comprised of perimeter portions, however a front and/or back surface of the housing, such as a front 25 and/or 35 back membranes, may also be provided in addition to the perimeter portions 2 and 3. A gasket 15 may also be included. The top 2 and bottom 3 member and/or gasket 15 may circumscribe an electronic device. An adhesive 26 may also be provided so as to join the top 2 and bottom 3 members together along with the gasket 15 and front screen 125 of a housed electronic device 100.

FIG. 4B provides a close up view of a latching mechanism of the disclosure. A top member 2 and a bottom member 3 are provided. The top member 2 includes an interior perimeter portion 20*a* and an exterior perimeter portion 20*b*. The interior and exterior perimeter portions may be composed of the same or different materials. For instance, the interior perimeter portion may be composed of a stiff plastic, such as polycarbonate, and the exterior perimeter portion 20*b* may be composed of a more flexible material such as TPE. The top member 2 additionally includes a clasping mechanism 27. The clasping mechanism 27 may include a stiff element, such as a polycarbonate. The bottom member 3 may also include an interior and exterior member. As depicted a perimeter portion 30 is provided. The perimeter portion 30 includes a clasping mechanism 37*c*, which clasping mechanism may be configured as one or more apertures or grooves that are adapted for receiving the clasping mechanism 27 of the top member, which clasping mechanism may be configured as a ridge member or one or more teeth members. The clasping mechanism 27 of the top member 2 may be held within the clasping mechanism 37 by an elastic force provided by the flexible material of the exterior perimeter portion 20*b*. The perimeter portions of the top 2 or bottom members 3 may be flat or substantially curved.

FIG. 4C provides a close up front and side view of two different embodiments of a perimeter portion clasping mechanism 37*c* of FIG. 4B. As can be seen with respect to FIG. 4C, the clasping mechanism 37*c* may be configured as a receptacle, such as for a corresponding toothlike clasping mechanism 27 of a top member, or it may be configured so as to include one or more groove elements. Front views and side views are depicted.

FIG. 4D provides another embodiment of a suitable clasping mechanism of a housing of the disclosure. The housing includes a top member 2, having a clasping mechanism 27 that may be foldable, and a bottom member 3, having a

clasping mechanism **37** that may be foldable. A further perimeter portion **4** may be included, which perimeter portion **4** may include a plurality of clasping mechanisms **4***a* and *b*. The perimeter portion **4** and clasping mechanisms **4** *a* and *b* may be designed to receive the clasping mechanisms **27** and **37** of the top **2** and bottom **3** members respectively. A compressible gasket **15** may also be provided between the perimeter portion **4** and a perimeter of a housed device, such that as the top and bottom members are coupled with perimeter portion **4**, e.g., snapped together, the gasket may be compressed causing a tension to be exerted against the clasping mechanisms thereby locking them into place. An additional clasping member **6** may further be coupled to the top, bottom, and perimeter members for further security. Additionally, one or more adhesive members **25** may be included for additional security and a stronger attachment. In this manner, by assembling the housing a watertight seal may be provided.

FIG. **4**E provides another embodiment of a housing **1** of the disclosure. The housing **1** includes a top member **2**, a bottom member **3**, and a perimeter member **4**. The top and bottom members may be comprised of a semi-flexible or flexible material and the perimeter portion may be composed of a rigid member. The top member **2** may include a clasping mechanism **27** which corresponds to a clasping mechanism **4***a* on the perimeter member **4**. The bottom member **3** may include a clasping mechanism **37** which corresponds to a clasping mechanism **4***b* on the perimeter member **4**. One or more gaskets **15** may also be included. In various embodiments, the top and/or bottom members may be fabricated from a rigid or semi-rigid plastic or metal, such as a pressed or formed metal. The perimeter portion may composed of a plastic such as a rigid plastic like polycarbonate or a more flexible material such PTE. In this embodiment, a front and/or back membrane need not be included.

FIG. **4**F provides a side view of the housing **1** of **4**E as it would be when assembled around an electronic device **100**, such as a mobile telephone. The housing **1** includes a top member **2**, a bottom member **3**, and a perimeter member **4**. Clasping mechanisms **27***c* are shown as they would be when the top, bottom, and perimeter portions are assembled together and clasping mechanisms **27**, **37**, **4***a*, and **4***b* are coupled together so as to seal the housing **1** around the device **100** in a waterproof sealing.

FIG. **4**G provides another similar embodiment to that of FIG. **4**E. In this embodiment, both the top member **2** and the bottom member **3** include undulating clasping mechanism **27** and **37** having either male or female locking elements, and the perimeter member **4** also includes corresponding female and/or male locking elements **4***a* and **4***b*, such that as the top **2** and bottom **3** members are coupled, e.g., snapped, together the male and female locking elements are joined thereby sealing the housing **1** around the device **100** in a watertight seal.

FIG. **4**H provides another embodiment of FIG. **4**E with a modified configuration, this time without an intervening perimeter member **4** between the top **2** and bottom **3** members. In this embodiment, the top member **2** and the bottom member **3** include corresponding clasping mechanisms **27** and **37** that are configured for being coupled together thereby forming and sealing the housing **1** around a device **100**. In this embodiment, the top and bottom members may additionally include several additional standoffs, e.g., **16** *a, b, c, d*, etc. One or more gaskets **15** may additionally be included. The top **2** and/or bottom **3** member may further include one or more bumper portions **8***b*, such as TPE corner bumper portions that are inserted between one or more hard plastic, e.g., polycarbonate, exterior portions **8***a*.

FIG. **4**I provides another embodiment of a housing of the disclosure. The housing includes a top member **2** having a clasping receptacle **27***a*, and a bottom member **3** having a clasping receptacle **37***b*. The top member **2** and bottom member **3** are coupled together and sealed by the addition of an additional clasping mechanism **27***c*, which may include a plurality of end portions configured for being inserted within and thereby attaching to the clasping receptacles **27***a* and **37***a*. The clasping mechanism **27***c* may be configured as a flexible, e.g., spring, clip member that when associated with the top **2** and bottom **3** members, the housing **1** is formed and sealed in a liquid-proof sealing. The top **2** and bottom **3** members may further include an additional locking mechanism. For instance, the top **2** and bottom **3** members may include additional corresponding male and female clasping mechanisms **27***b* and **37***b*, which are configured for being coupled together and thereby seal the members of the housing **1** together. In various embodiments, the top and bottom members are configured such that as they are joined they form a channel **10** into which a gasket **15** may be inserted. A waterproof adhesive may also be employed at a housing device interface to effectuate the sealing. In this embodiment a front surface membrane need not be included as an adhesive may be used to seal the top member **2** with the front screen **125** of the electronic device **100**.

FIG. **4**J provides another embodiment of FIG. **4**H, however, in this embodiment, when the top **2** and bottom **3** members are coupled together, the channel **15** is formed on a top surface of the housing **1**, rather than on a bottom surface of the housing **1**. It is also noted that in this embodiment, the top **2** and bottom **3** members include corresponding clasping mechanisms **27** and **37** that are configured for being coupled together so as to seal the housing in a watertight sealing. In this embodiment an external clipping mechanism **27***c* is not provided, however, if desired the top and bottom members could be configured so as to include an additional clasping mechanism configuration as embodied in FIG. **4**I.

FIG. **4**K provides another embodiment of FIG. **4**H wherein the top **2** and bottom **3** members include extended clip receiving elements **27***a* and **37***a* respectively. An external clipping mechanism **27***c* is also provided. In this embodiment, the top **2** and bottom **3** members are configured for being coupled together in such a manner that as the housing **1** is formed clip receiving elements **27***a* and **37***a* are aligned. When so aligned, the clip mechanism **27***c* may be slid over the corresponding clip receiving elements so as to lock the top and bottom members together and thereby provide a liquid-tight sealing for the housing **1**. It is noted that the clip receiving elements and clip mechanism may additionally include corresponding male and female elements so as to further secure the snapping together of the housing members.

FIG. **4**L provides another embodiment of a housing of the disclosure. The housing **1** includes a top member **2** and a bottom member **3** that are configured for being coupled together by the joining of corresponding clasping mechanisms **27** and **37**. A combination gasket and adhesive **26** may further be provided so as to ensure a waterproof engagement between the housing **1** and a housed device **100**. In this embodiment, a binding clip **27***c*, as described above, is further provided to additionally secure the housing. The clip element **27***c* may be a clamping member that is flexible enough to be fitted over the top and bottom members, but rigid enough so as to seal the two members together in a liquid proof seal.

FIG. **4**M provides an alternative embodiment of a housing of the disclosure. The housing **1** includes a top member **2** having a clasping mechanism **27** and a bottom member **3** having a clasping mechanism **37**. A clip element **4** is also

provided. In this embodiment, the clip element **4** includes locking elements that are configured so as to be coupled with corresponding clasping mechanisms **27** and **37** respectively. Further, in this embodiment, the clip element **4** includes an internal member **4***b* and an external member **4***a*. In various instances, both internal **4***a* and external **4***b* clipping members may include one or more apertures within which a securing member **27***c*, such as a screw member, may be joined so as to further lock the members of the housing together. The securing member **27***c* may be configured for being attached to the clip element from a vertical or horizontal entry point.

FIG. **4**N provides a front and back view of the housing of FIG. **4**M, housing a device **100**, with the screw elements **27***c* locked into place along a perimeter portion of the housing **1**.

FIG. **5**A is a perspective view of a top surface **25** of a top member **2** of the disclosure. The top surface **25** comprises a membrane. The membrane may be fabricated from any suitable material. The membrane is typically transparent, but may contain one or optically opaque regions. An opaque region may be entirely opaque or may include one or more optically transmissive regions. Accordingly, as depicted in FIG. **5**A the membrane **25** includes an optically transmissive region and an opaque region, which opaque region includes two features, an optically clear region, e.g., a proximity sensor feature **48**, and a button feature **40**.

FIG. **5**B illustrates several other features, and their components, which may be included in a top member, e.g., membrane **25**, of the housing **1**. These features include button feature **40** (or home aperture), an acoustic aperture feature **44**, a camera lens portion **47**, and a proximity sensor portion **48**.

In this embodiment, the button feature **40** includes a plurality of sub-features. For example, the button feature **40** may include a button feature membrane with a button feature first transition **41** that interacts with a button feature pivot **42** such that as the button is depressed, the button feature pivot deforms. The button feature **40** may also include a standoff or actuator that is coupled to the button feature membrane, such as to the underside of the button feature membrane via a suitable adhesive. The button feature standoff may be configured such that as the button feature is depressed the standoff interfaces with a button of an underlying device so as to effectively manipulate said button. The home button **40** may be fabricated in any suitable manner such as being fabricated from component parts and assembled together, as described herein, or may be formed, such as thermal formed, in conjunction with the front membrane **25**. Accordingly, it is to be noted that while in this embodiment the button feature **40** is composed of several different elements, in various other embodiments the button feature may simply be an indented portion, e.g., a thermally formed indented portion, of the front membrane **25** circumscribed by a raised region. Although not shown herein, in certain embodiments, an inward facing surface of the home button may include a standoff, such as an adhesive spacer element, that may function so as to allow the home button **40** better engage a home button **140** of an underlying device.

In various embodiments, the acoustic aperture feature **44** may be comprised of an acoustic exit aperture **49** that is overlaid with water-impermeable gasket, e.g., an acoustic membrane or vent material **45**, which membrane material covers the acoustic aperture **49** thereby preventing the ingress of water there through while at the same time allowing the transmission of sound. With respect to FIG. **5**B, in this embodiment, the acoustic aperture feature **44** includes a plurality of sub-elements. For instance, the acoustic aperture feature **44** includes an acoustic membrane material **45***a*, the acoustic membrane material **45***a* includes an acoustic exit aperture **49**. The acoustic membrane material **45***a* is offset from the membrane **25** and attached therewith by an adhesive ring **46** and is further associated with an acoustic vent material **45***b*, which acoustic vent material is sound permeable but liquid impermeable. The acoustic vent material **45***b* may be associated with the acoustic membrane material **45***a* such that it covers the acoustic exit aperture **46** so as to prevent the ingress of water there through while at the same time allowing the transmission of sound.

The membrane **25** may also include video camera **47** and proximity sensor **48** regions, which regions may be configured for interacting with a video camera and proximity sensor of an underlying device. In this embodiment the video camera and proximity sensor regions are optically clear regions. In various other embodiments, the camera region may include a lens configured to be aligned with the camera lens of a housed device.

In certain instances, the proximity sensor **148** of the underlying electronic device **100**, if included therein, is typically incorporated into the device, e.g., touch screen device, such that when the device is placed close to the face of a user or bounds of a pocket or other storage element, etc. the touch capabilities of the touch screen **125** are disabled, so as to prevent unintended operation of the touch interface by the face, ear, or other object. As can be seen with respect to FIG. **5**C, such proximity sensors **148** are typically comprised of an infra-red transmitter **148***a*, and an infra-red receiver **148***b* to detect reflections from the infra-red transmitter from objects, such as a face or pocket, etc., that is in close proximity.

In certain instances, such as depicted in FIG. **5**C, when the device **100** is housed within a housing **1**, an air-gap can develop between the screen or membrane **25** of the housing **1** and the screen surface **125** of the electronic device **100** having the proximity sensor **148**, thereby causing the proximity sensor **148** to detect a reflection of its own beam, resulting in a false trigger of the proximity sensor, and consequently unintended disabling of the touch screen interface **125**.

In certain embodiments, the housings **1** of the present disclosure may overcome these problems in a variety of ways, as depicted in FIG. **5**C. For instance, an unintentional air-gap may be prevented and/or reduced, thereby mitigating the false-triggering of the proximity sensor **148**, in one or more of the following ways. An optically transparent member **48***a*, e.g., spacer, of a determined thickness may be molded or otherwise adhered to the membrane **25** to fill the air-gap. The adhesive could be any suitable adhesive, such as, in certain instances, the adhesive could be glue, adhesive tape, heat-welding, molding, static cling, surface tension, and/or the like. Further, a physical deformation **48***b* may be added to the membrane **25** so as to form the optically clear region of the proximity sensor portion **48** of the membrane **25** to reduce the air-gap. Such a depression may be performed with cold-pressing, or by thermo-forming the membrane. Additionally, the membrane **25** may be over-formed to provide a continuous positive tension thereon. Also, a member of double-sided optically clear adhesive with a pre-determined thickness can be applied to membrane **25**, and then the membrane **25** may be adhered to the screen of the electronic device **100** to completely eliminate the air-gap. The adhesive may be formed by surface tension, static cling, viscous fluids, adhesive, and/or the like.

FIG. **5**D is a cross section view of the membrane **25** of FIG. **5**A. As depicted in FIG. **5**D the top surface membrane **25** spans from one side **23** of the top member **2** to the other side **24** of the top member. The membrane **25** may include a raised ridge portion **43** which circumscribes the membrane **25**. The raised ridge portion may be configured for interfacing with a

perimeter portion **20** of the top member **2** in a manner such as described with respect to FIG. **6** below. In certain embodiments, the membrane **25** is flat across its surface and therefore the perimeter portion **43** of the membrane **25** is not a raised ridge portion.

However, as illustrated in FIG. **5**D, in certain instances, the membrane **25** may include an interior portion and an outer perimeter portion **43**, such as a portion that may interface with a perimeter portion, e.g., of the housing **1**, e.g., top member. As described above, the perimeter portion **20** of the top member **2** may include a plurality of sub-portions, such as a first sub-portion or interior perimeter portion **20***a* that includes an interior membrane interfacing member, and a second sub-portion or exterior perimeter portion **20***b* that includes an exterior membrane interfacing member. The membrane **25**, therefore, may be configured such that it spans from one side of the perimeter **23** to another **24** in such a manner that the back surface of the membrane **25** associates with at least a portion of the interior membrane interfacing member of the interior perimeter portion **20***a*, and the front surface of the membrane **25** associates with at least a portion of the exterior membrane interfacing member of the exterior perimeter portion **20***b*. See, for instance, FIG. **6** below.

FIG. **6**. Illustrates an exemplary embodiment of how the membrane **25** of FIG. **5**D may associate with the perimeter portion **20** of the top member **2**. As can be seen with respect to FIG. **6**A the membrane **25** includes an interior portion that spans across the top member **2** and a perimeter portion **26** that interfaces with the perimeter portion **20** of the top member **2**. The perimeter portion **20** of the top member **2** includes an interior perimeter portion **20***a* that includes an interior membrane interfacing member; and an exterior perimeter portion **20***b* that includes an exterior membrane interfacing member.

The membrane **25** is configured such that it spans from one side **23** of the top member to the other side **24** of the top member **2**. The membrane has a front surface **25***a* and a back surface **25***b*. The back surface of the membrane **25***b* associates with at least a portion of the interior membrane interfacing member of the interior perimeter portion **20***a* of top member **2**; and the front surface of the membrane **25***a* associates with at least a portion of the exterior membrane interfacing member of the exterior perimeter portion **20***b* of top member **2**.

In this embodiment, the interior perimeter portion **20***a* comprises an under-moulded material, such as a rigid material, for instance, a rigid plastic, metal, polycarbonate, and the like, that is fabricated in a first moulding process; the membrane **25** is then added and attached thereto; and the exterior perimeter portion **20***b* comprises an over-moulded material, such as a semi-flexible material, such as rubber, TPE, polyethylene, or the like, that is fabricated in a second moulding process, for instance, after the rigid interior perimeter portion **20***a* has been fabricated and the membrane **25** attached thereto. Hence, once the rigid first perimeter portion **20***a* has been fabricated, the membrane **25** may be applied from one side of the perimeter **23** to the other **24** and attached thereto, such as by an adhesive layer. Subsequently, the semi-flexible or flexible exterior perimeter portion **20***b* may be fabricated and applied to the interior perimeter portion **20***a* and over a perimeter portion **43** of the membrane **25**, e.g., in an over-mould process.

In such an instance, the interior perimeter portion **20***a* of the top member **2** includes an interior or back surface membrane interfacing region which associates with a back surface of the membrane **25***b*, either directly or through an intermediary adhesive layer(s); and the exterior perimeter portion **20***b* includes an exterior or top surface membrane interfacing region that associates with the top surface of the membrane **25***a*, either directly or through an intermediary adhesive layer (s). In this undermould/overmould process the membrane **25** is secured to the perimeter portions in a liquid-proof seal. It is noted that as depicted the membrane **25** includes an exterior perimeter ridge feature **26**, however, in certain embodiments this ridge feature need not be included.

FIG. **6**B illustrates a cross section of a side portion of the device of the disclosure. Depicted therein are sides **23** and **33** of top and bottom members **2**, **3** respectively of the housing **1**. With respect to top side member **23** of top member **2**, the side member **23** comprises a perimeter portion **20** of the top member **2**. The perimeter portion **20** in this embodiment includes an interior perimeter portion **20***a* and an exterior perimeter portion **20***b*. The interior perimeter portion **20***a* is fabricated from a rigid or semi-rigid material. A membrane **25** spans across from one side **23** of top member **2** to another side **24** (not shown). The membrane **25** includes a front or top surface **25***a* and a back or bottom surface **25***b*. The back or bottom surface of the membrane **25***b* is moulded or otherwise attached to the interior perimeter portion **20***a*.

For instance, the membrane **25** may be attached to the interior perimeter portion **20***a* via a suitable adhesive or directly via the fabrication, e.g., moulding, process. The exterior perimeter portion **20***b* is fabricated from a flexible or semi-flexible material. The exterior perimeter portion **20***b* may be associated with the interior perimeter portion **20***a* by various means known in the art, such as by a moulding, e.g., overmoulding, process. The front or top surface of the membrane **25***a* is moulded or otherwise attached to the exterior perimeter portion **20***b*. For instance, the membrane **25** may be attached to the exterior perimeter portion **20***b* via a suitable adhesive or directly via the moulding process. In this manner the membrane **25** is attached to the perimeter portion **20** to form a reliable, tight seal. It is to be noted that although a particular embodiment has been depicted, various aspects of the configuration may be changed without digressing from the depicted embodiment. For instance, in certain instances, the membrane **25** may be attached directly to the rigid frame **20***a* of the perimeter portion **20** of the top member **2**, while the flexible outer perimeter portion **20***b* is not overmoulded therewith but is adapted so as to be removable therefrom. A gasket, such as a circumferential gasket may or may not be included therewith.

FIG. **6**C illustrates an embodiment of how the membrane **25** associates with a top side portion **23**. The top side portion **23** includes an interior perimeter portion **20***a*, which portion comprises a rigid framework body that can be fabricated in a first process. The membrane **25** can then be attached either directly during the fabrication process, e.g., the moulding process, or indirectly through the addition of one or more intervening adhesive layers, e.g., **25** *c* and d. In certain embodiments, the one or more adhesive layers need not be included.

In one embodiment, once the rigid internal framework **20***a* has been fabricated and the membrane **25** attached thereto, a second, more flexible perimeter portion **20***b* may be fabricated and overlaid or otherwise moulded over the interior perimeter portion **20***a* and membrane **25**. In certain instances, the membrane **25** may be attached to the perimeter portions **20** *a* and/or *b* via one or more adhesives **25** *c* and/or d. In a manner such as this a liquid-tight seal is produced between the membrane **25** and the perimeter portion **20**, wherein the interior perimeter portion **20***a* interfaces with a bottom surface **25***b* of membrane **25** (e.g., via adhesive **25***c*), and an outer perimeter portion **20***b* is configured with respect to the

top member **2** such that it interfaces with a top surface **25***a* of the membrane **25** (e.g., via adhesive **25***d*).

FIG. **6**D depicts a further embodiment of the overmoulded top member **2** of FIG. **6**C. The rigid interior member **20***a* is fabricated such as from a hard polycarbonate material and a membrane **25** is associated therewith, e.g., by the application of an intervening adhesive. Any suitable adhesive or molecular bonding material may be employed. Once the membrane **25** has been attached to the rigid body **20***a*, a second more flexible member **20***b*, e.g., a semi-flexible or flexible material such as TPE, may be fabricated and molded over both the rigid body **20***a* and a perimeter portion **26** of the membrane **25**, so as to circumscribe the perimeter thereof. In this manner the internal rigid body **20***a* will give the top member **2** *a* strong internal framework and the flexible external body **20***b* will provide a layer of shock absorbance to the top member **2**. Furthermore, an over-moulding process such as this will enhance the bonding of the membrane **25** to the external and internal bodies **20** *a, b* of the perimeter portion **20** thereby enhancing reliability of the seal and ensuring that the seal is liquid-proof.

As can be seen with respect to FIG. **6**D, the rigid interior perimeter portion **20***a* of top member **2** includes a clasping mechanism **27** that is designed to associate with a corresponding clasping mechanism **37** of the exterior perimeter portion, e.g., bounding member **30***b*, of the bottom member **3** in a liquid tight seal. The liquid tight seal is further insured by the presence of the gasket **15** within the channel **10** of bottom member **3**. For instance, as the clasping member **27** of the interior perimeter portion **20***a* of the top member **2** slides into the channel **10** of the bottom member **3** so as to associate with its corresponding clasping member **37** of the exterior bounding member **30***b*, a portion of the interior perimeter portion **20***a* of the top member **2** contacts and presses down on the gasket **15** thereby compressing the gasket and further insuring a liquid tight seal therewith. In this embodiment, the clasping member **37** of the exterior perimeter portion **30***b* is formed as a circumferential groove that circumscribes at least a portion of the channel **10**. Hence, the clasping mechanism **27** of the interior perimeter portion **20***a* of the top member **2** is configured for at least partially being received within the groove **27** so as to be coupled therewith and therefore at least partially circumscribes the channel **10** when the top member **2** is coupled to the bottom member **3**.

Also depicted is top surface membrane **25**, which top surface membrane **25** includes an acoustic vent feature **44**, which acoustic vent feature **44** includes an acoustic exit aperture **49** that is overlaid with water-impermeable gasket, e.g., an acoustic membrane **45**, which membrane material covers the acoustic aperture **49** thereby preventing the ingress of water there through while at the same time allowing the transmission of sound. In this instance, the acoustic membrane material **45** is offset from the membrane **25** and attached therewith by an adhesive ring **46**. Further depicted is lens feature **80** positioned on a back surface member **35** of bottom member **3**. The top surface **35***a* of bottom surface member **35** also includes standoffs **16**. As depicted, the standoffs are illustrated as bump portions **16**, although in certain instances they may be elongated, raised line members, which may be positioned anywhere along an interior portion **35***a* of the bottom member **3**, such as in a central portion of the bottom member **3**. For instance, the bottom member **3** may include a plurality of parallel raised standoff members in the center portion of the bottom member **3**. Such a position may be optimal for maximizing sound resonance without creating increased distortion.

FIG. **6**E illustrates an overmould process as described above. This manufacturing process may be employed for fabricating the members of the housing. First a rigid interior structure **20***a* is fabricated from a rigid material such as polycarbonate. Second, a membrane **25**, such as an IMD-PET film, may be provided. In certain instances, the film or membrane may include one or more graphics thereon and in such an embodiment, the graphics, such as 3D graphics, may be printed on the film. The membrane is then cut to size and loaded into a fabrication tool. The membrane, e.g., film, is then associated, e.g., overmoulded, with the rigid polycarbonate structure **20***a*. The membrane **25** may include a hard or semi-hard coating which may be positioned so that the hard coat is facing up. This surface may be hard to bind to. This coating may be positioned on a top surface of the membrane **25***a*, so as to be facing up. The rigid material perimeter structure **20***a*, and in certain embodiments the membrane **25** may then be overmoulded with a more flexible material, such as with TPE, to form a more flexible outer perimeter portion **20***b*. For instance, an additional, semi-rigid or semi-flexible material **20***b*, such as TPE, may be added over the rigid material **20***a* and a perimeter **26** of the membrane **25**. In this manner the membrane **25** may be attached to the rigid internal structure **20***a* of the housing **1** and a more flexible second structure **20***b* may be moulded there over so as to form a secure seal therewith.

Accordingly, as can be seen with respect to FIGS. **6**A-E, the perimeter portion **20** of the top member **2** of the housing **1** may include a plurality of sub-portions, a first sub-portion being an interior perimeter structure portion **20***a* with a membrane interfacing region, e.g., a region that interfaces with a perimeter portion **26** of the bottom of the front membrane **25***b*; and a second sub-portion being an exterior perimeter flexible portion **20***b* with an additional membrane interfacing region, e.g., a region that interfaces with a perimeter portion **26** of the top of the membrane **25***a*. Hence, the membrane **25** is configured such that it spans from one side **23** of the perimeter to another **24** in such a manner that the back surface **25***b* of the membrane associates with the interior perimeter portion **20***a* at the membrane interfacing region; and the front surface **25***a* of the membrane **25** associates with the exterior perimeter portion **20***b* at the membrane interfacing region. The membrane may further comprise one or more surface features as described herein.

For example, in certain embodiments, the top or bottom member may include a front and/or back surface, wherein the top and/or back surface comprises a membrane, the membrane may be a single or a plurality of membranes associated with one another. The membrane may include one or more features, such as features that allow the housing to accommodate particular features of an underlying device to be housed therein. Such features may include an acoustic membrane feature, button feature, a proximity sensor aperture, a video camera aperture and/or lens feature, and/or the like.

Accordingly, as can be seen with respect to FIGS. **6**F-**6**H, the membrane **25** may include a plurality of features, such as an acoustic membrane feature **44**, a lens feature **47**, and a proximity sensor feature **48**. FIG. **6**F provides a cut-away view of the housing **1**. The acoustic membrane feature **44** may include an acoustic exit aperture **49** in the membrane **25** to which a second membrane **45**, e.g., an acoustic membrane, may be coupled, such as in an offset fashion. However, in this embodiment, an acoustic membrane **45** is not attached. Rather, the acoustic aperture **49** is left open. The lens feature **47** may include a lens, such as a video camera lens, as described herein below with reference to the bottom member **3**, or it may include an optically transparent region. In this

embodiment, the lens feature is simply an optically clear region. The proximity sensor feature **48** may include an optically transparent region and/or may include a proximity sensor gasket **17**. In this embodiment, a proximity sensor gasket **17** is not included.

Additionally, although not depicted herein, a spacer element, such as a long strip of adhesive tape may be applied to a back surface **25***b* of the top membrane **25**. The space may run along one or more sides and may run substantially all the length or a lesser portion thereof. Such a spacer element could be useful for creating a slight gap between the back surface **25***b* of the front membrane **25** and the front surface **125** of a screen of an electronic device **100**. This gap may be useful for a number of reasons such as for enhanced sound transmission, such as that caused by allowing sound to more freely resonate between the front membrane **25** and the front screen **125** of a housed device **100**, and/or for preventing a "rainbow," or Newton ring, from forming due to the internal reflection of light that may be caused by the front membrane **25** sticking to the front surface of a housed electronic device. Although the spacer element is described as being an adhesive strip, it may have any of a number of configurations so long as it is capable of attaching to a front membrane **25** or a perimeter portion **20** and capable of preventing Newton rings (e.g., reflective rainbow circles) from forming between the front membrane **25** and the screen of a housed device.

FIG. **6**G depicts the top member **2** back surface membrane **25***b* of the housing **1** as depicted in FIG. **6**F, wherein a liquid proof acoustic vent membrane **45** is attached to the acoustic vent portion **44**, and a spacer gasket **17** is attached to the proximity sensor portion **48**. As can be seen, the top member **2** comprises a membrane **25**. The membrane **25** includes a plurality of regions. A first region, e.g., a center region, includes an optically clear region through which the touchscreen interface of a touchscreen electronic device may be interacted with; and a second region, e.g., a perimeter region, that is masked so as to be opaque. In this embodiment, the opaque region is not entirely opaque but includes a plurality of optically clear regions, such as video camera optical aperture **47** and a proximity sensor **48**. The opaque region also includes an acoustic vent feature **44** having an acoustic aperture **49** covered by a water-impermeable gasket **45**.

In this embodiment, a water impermeable acoustic membrane **45** is attached to the membrane **25** enclosing the aperture **49** in a liquid proof sealing that allows sound to pass there through but not water. In a manner such as this sound from a speaker portion **144** of an underlying device **100** may be transmitted through the aperture **49**, but liquid cannot. The proximity sensor feature **48** not only includes an optically transparent region it further includes a proximity sensor gasket **17**. The proximity sensor gasket **17** functions to reduce if not entirely eliminate the reflection of light from the membrane **25** being directed back to the proximity sensor **148** of an underlying device thereby activating it, such as described with reference to FIG. **5**C. The gasket **17** may have any suitable configuration, but in various instances it may be configured to circumscribe the proximity sensor region **48** and may further include a transecting element that travels from one perimeter to the other so as to transect the gasket. This transecting region may function to further prevent the membrane **25** from activating the proximity sensor **148** of an underlying device **100**.

FIG. **6**H provides a cut-away, close up view of the acoustic membrane feature **44** of FIG. **6**F. As can be seen with respect to FIG. **6**H a membrane **25** is depicted. The membrane **25** includes an aperture **49** configured for allowing sound to exit through the top member **2** of the housing **1**. The aperture **49** is overlaid with a secondary membrane, such as an acoustic membrane **45**. The second membrane **45** is offset from the first membrane **25** and attached thereto by an adhesive rim **46**. The second membrane **45** is permeable to sound but not to liquid, such as water.

For instance, as can be seen with respect to FIG. **6**H, the adhesive rim may further be configured as a spacer **46** that may be adhered to the acoustic membrane **45**, e.g., along a perimeter thereof, so as to offset the acoustic membrane **45** from the membrane **25**. Accordingly, in certain instances, a spacer may be included and adhered to the acoustic membrane **45** and the membrane **25** by an adhesive. In other instances, a spacer need not be included, rather, the acoustic membrane **45** may be offset from the membrane **25** by the mere presence of the adhesive.

The second membrane **45** may be an acoustic membrane that is transmissive to sound and/or gas but not to liquids or solids. For example, the acoustic membrane **45** may be a semi-permeable membrane such as GorTex®. The adhesive may be any suitable adhesive and may be applied to the second, e.g., acoustic membrane, **45** so as to attach it to the first membrane **25**. As such, the acoustic membrane **45** will allow sound to travel through the acoustic exit aperture **46** of the membrane **25** at the same time as keeping liquid, e.g., water, and dirt from passing there through. As depicted, the acoustic membrane **45** includes two portions **45***a* and **45***b*. The first portion **45***a* includes an opening therein and is attached directly to the underside **25***b* of the front membrane **25** in such a manner that the openings aligned. An adhesive spacer **46** is positioned on top of the membrane **45***a* and is further attached to an additional water impermeable membrane **45***b*, which membrane **45***b* spans the openings in membranes **45***a* and **25**. The acoustic membrane **45***b* covers the acoustic vent aperture **49** so as to prevent the ingress of liquid, such as water, but to allow the egress of sound out of the housing **1**.

A common feature of electronic devices, such as mobile telephones, is a navigation button, e.g., a home button, that when manipulated allows a user to navigate through various menus contained within the programming of the underlying device. Accordingly, a housing **1** of the disclosure may include a front surface **25** having a corresponding navigation interface feature, such as a button feature **40**. As can be seen with respect to FIGS. **7**A (a)-(f), in certain embodiments, the front surface of the top member **2** may be a membrane **25** having a button feature **40**.

FIG. **7**A illustrates three various embodiments of a button feature **40** that may be employed with the housing **1** of the disclosure. The button feature **40** may have any suitable configuration so as to allow the membrane **25** of the top member **2** to effectively interact with an underlying button feature **140** of an encased device **100**, e.g., without substantial deformation of the membrane **25**.

For instance, the button feature **40** may simply be a specifically designed detent that is integral with the membrane material **25**, or it may be an additional feature added to the membrane, such as a feature that includes a layer of stiff or flexible material that has been molded, adhered, or otherwise attached to the membrane **25** as a button area. If the button feature **40** is an additional feature to be added to the front membrane **25**, the button feature may be configured such that the button feature does not increase the thickness of the membrane **25** so as not to decrease the functionality and aesthetics of the housing **1**.

As can be seen with respect to FIG. **7**A (a) the top surface **25** of the housing **2**, e.g., the membrane, such as a PET membrane, includes an indented region **40** that is at least

partially surrounded by a raised ridged or pivot region **42**, which pivot region **42** may be associated with at least a first transition **41**. The indented button feature **40**, the first transition **41**, and the pivot region **42** are configured such that as the button feature **40** is depressed, the ridged pivot region deforms **42** allowing the indented portion to travel without causing substantial stretching of the membrane **25** outside of the button region. In certain embodiments, the pivot region **42** comprises a ridged circumference that can be adapted so as to create a pivot point with an increased pivot radius.

Accordingly, in a manner such as this the button feature **40** may be manipulated in such a manner that it interfaces with a navigation region **140** of an underlying device **100** thereby allowing a user to easily navigate through the various menus of an encased device. As can be seen with respect to FIG. **7**A (a) and (b), a three dimensional form of a button feature **40** may be present in the top surface **25** of the housing **1**, e.g., the membrane. For instance, the membrane **25** may include an indented region that may or may not be surrounded by a ridged circumference having a first and/or second transitions **41** and **42**, respectively.

For example, where a ridged circumference is included, the ridged circumference may have a first transition **41** and may further have a second transition **42**, such that the ridged circumference surrounds a flat or an indented button surface of the button feature **40**. As the button surface is depressed, at least the first transition **41** of the ridged region deforms thereby allowing the indented portion to travel without causing substantial stretching of the membrane **25** outside of the button region **40**.

Additionally, the ridged circumference can be adapted so as to create a pivot point **42** with an increased pivot radius. See FIG. **7**A (b). As the button surface is depressed, the first transition **41** of the ridged region deforms pivoting about the second transition **42** which further allows the indented portion to travel without substantially stretching the membrane **25**.

In a further embodiment, as can be seen with respect to FIG. **7**A (c) and (d), the button feature **40** may be configured as a substantially flat surface or a surface having a minor detent therein and having a formed or attached nipple associated with a back surface of the membrane **25***b*. The nipple may be positioned in the direct center of the button feature or may be offset therefrom, e.g., so as to accommodate different features of a home button and/or different configurations thereof. In this embodiment, an indented region and/or ridged circumference **42** is not included. Rather, the first transition **41** is linear and sharp thereby creating a sharp pivot interface. Further, as seen with respect to FIGS. **7**(*c*) and (*d*), the button feature **40** is substantially flat all the way across but includes a nub or nipple on an underside of the membrane **25** that may be pressed into the button of the underlying device when the button feature is depressed. The button feature **40**, first transition **41**, and nipple are configured such that as the button feature **40** is depressed, the membrane **25** flexes along the sharp pivot **41** and the nipple interfaces with the navigation button **140** of an underlying device **100** thereby allowing a user to navigate through the various menus of an encased device.

In an additional embodiment, as can be seen with respect to FIG. **7**A (e) and (f), the button feature **40** may be configured as a raised membrane member **40** having a knob associated with a back surface of the membrane **25***b*. The knob feature may be positioned in the direct center of the button feature or be offset therefrom. In this embodiment, a ridged circumference is not included. Rather, the first transition **41** is raised and the membrane **25** is stretched over the knob. The button feature **40**, raised first transition **41**, and knob are configured such that as the button feature **40** is depressed, the raised membrane portion is lowered and the knob interfaces with the navigation button **140** of an underlying device **100** thereby allowing a user to navigate through the various menus of an encased device. Hence, the button feature **40** may include a raised, but depressible knob portion having the membrane **25** material stretched over it. The knob portion may be positioned so as to allow the button feature to interact with the button **140** of an underlying device **100**.

FIG. **7**B provides a side cut-away, cross section view of a housing **1** of the disclosure, showing the indented button feature **40** of FIG. **7**A (a). The housing **1** includes a top member **2** and a bottom member **3**. The top member **2** includes a front surface, which in this embodiment is composed of a flexible membrane **25**. The front membrane includes a button feature **40**, which button feature includes a pivot edge **41** and a raised pivot ridge **42**. The button feature **40** is indented and configured to interface with the "home" or "menu" button of an encased device. The pivot ridge portion **42** is raised and at least partially circumscribes the button feature **40** so as to accommodate the travel pursuant to the button **40** being depressed. For instance, as the button **40** is depressed, pivot edge **41** flattens and pivot ridge **42** extends downwards.

The top member **2** further includes a charge port feature **70** on its proximal end **21**. The charge port feature **70** includes a charge port opening **71***a*, which charge port opening is covered by a charge port latch cover or door **71***b*. The charge port opening **71***a* is bounded by a bounding member. The bounding member may be formed of any suitable material and may be in any suitable shape.

For instance, the charge port bounding member may be composed of the same material from which the interior and/or exterior perimeter portions **20** *a* and/or *b* are made. Hence, the charge port bounding member may be integrally formed along with the interior perimeter portion **20***b* and/or further formed along with the exterior perimeter portion **20***b*. In certain embodiments, the charge port bounding member may be integrally formed along with the stiff and/or rigid interior perimeter portion **20***a* of the top member **2** so as to form a charge port opening **71***a*. A second flexible perimeter portion **20***b* may then be overlaid upon the rigid interior perimeter portion **20***a*, wherein a charge port cutout may be cut into the flexible perimeter portion **20***b* so as to at least partially bound the charge port opening **71***a* of the interior perimeter portion **20***a*.

However, in certain instances, as depicted in FIG. **7**B, the charge port bounding member may include a plurality of materials from which the charge port opening **71***a* is composed. For instance, the charge port opening **71***a* may be bounded by a plurality of materials having a different stiffness. For instance, a first bounding material may be a stiff material **72** which material is provided to give structure to the charge port opening **71***a*. A second more flexible material **73** may be included which material is configured for receiving a portion of a charge port door gasket **78**.

The charge port feature **70** may further include a charger port door **71***b* that may include a charge port door gasket **78**. Together the charge port door **71***b* and gasket **78** function to provide a waterproof sealing of the charge port orifice **71***a*. For instance, in this embodiment, the charge port bounding member includes a charge port door latch ramp receiving member **76**, and the charge port door **71***b* includes a corresponding charge port door latch ramp **77**. The charge port door latch ramp **77** is configured for being received within the charge port door latch ramp receiving member **76** thereby

latching the charge port door **71***b* to the bounding member. Thus, when the charge port door **71***b* is closed, the gasket **78** covers the charge port opening **71***a* thereby effectively sealing the opening **71***a* and preventing the entrance of liquid there through. The gasket may be composed of any suitable compressible material, which if desired may be further overlaid with a less flexible rubber material so as to provide greater resilience to the gasket **78**.

The charge port door **71***b* is configured for opening and closing so as to allow and/or prevent access to the charge port opening **71***a*. Hence, the charge port feature **70** may further include a charge port axle **74**. The charge port door **71***b* therefore may be configured to include an axle receiving orifice **75** though witch the axle **74** is fitted. In a manner such as this, the charge port door **71***b* may be rotated about the axle **74** from an opened to a closed position thereby permitting access to the charge port opening **71***a*, when in the opened position, or preventing access thereto by providing a waterproof seal when the charge port door **71***b* is in the closed position.

Also depicted is bottom member **3**. The bottom member **3** may include a perimeter portion **30** having a channel **10** therein. The channel **10** may be bounded by an interior perimeter portion **30***a* and an exterior perimeter portion **30***b*. The bottom member **3** is configured for being connected to the top member **2**, such as via corresponding latching mechanisms **27** and **37**, so as to form a waterproof sealing of the housing **1**. Specifically, the top member **2** may include an interior perimeter portion **20***a* that further includes an internal clasping mechanism **27**. The exterior perimeter portion **30***b* of the bottom member **3** may include the clasping mechanism **37**. The clasping mechanisms **27** and **37** may be configured for being coupled together so as to clasp the top **2** and bottom **3** members together thereby forming the housing **1**.

To further insure a waterproof sealing, a channel **10** may also be included along a perimeter portion of the housing **1**. The channel **10** may include a gasket **15** positioned therein. Accordingly, as the interior perimeter portion **20***a* of the top member **2** is aligned with the exterior perimeter portion **30***b* of the bottom member **3**, and the corresponding clasping mechanisms **27** and **37** are coupled together, the interior perimeter portion **20***a* of the top member **2** compresses the gasket **15** within the channel **10** of the bottom member **3** thereby creating a waterproof sealing of the housing **1**.

Also depicted on a front surface **35***a* of bottom member **3** are standoffs **16**. In certain embodiments, a bottom or top member may include one or more stand-offs **16**. For instance, in certain embodiments, such as for increased shock protection and/or sound transmission, a top and/or bottom member may include one or more preformed standoffs **16**, such as on an interior surface of the top **2** or bottom member **3**. As indicated above, the stand-offs **16** can be configured with a size, shape, and configuration so as to enhance the transmission of sound throughout the housing **1**.

FIG. **7**C provides a close up view of another embodiment of the button feature **40**. As can be seen with respect to FIG. **7**C, in various embodiments, a top member **2** and/or a bottom member **3** may include the channel **10**, which channel **10** may include gasket **15**. For instance, in this embodiment, the top member **2** includes an interior perimeter portion **20***a*, wherein the interior perimeter portion **20***a* is further configured to include an interior channel bounding member **20***a***1** and an exterior channel bounding member **20***a***2**. In this instance, the exterior channel bounding member **20***a***2** includes clasping mechanism **27**, and the exterior perimeter channel bounding member **30***b* of bottom member **3** includes corresponding clasping mechanism **37**. However, in various instances, this configuration could be reversed. Accordingly, where included, the channel **10** of the housing **1** may be included in either a top member **2** or a bottom member **3** or in both top and bottom members **2** and **3** respectively.

In certain embodiments, a bottom member may additionally include one or more features. For instance, although a top or bottom member may include a lens feature, in certain instances, the bottom member **3** includes a lens feature **80**. For example, FIG. **8**A provides a perspective view of a back surface **35***b* of a bottom member **3**. The bottom member **3** includes both distal and proximal end portions **31** and **32** as well as bottom side portions **33** and **34**. A camera portion **80** is also included. The camera portion **80** may include one or more of a raised lip portion **81** surrounding an optical skirt **82**. The optical skirt **82** is configured for housing at least a camera lens region **83** having a camera lens therein and may additionally include a flash lens region **85**, having a flash lens therein. Either lens can be replaced by an optically transmissive region.

Accordingly, in certain embodiments, a top and/or a bottom member **2**,**3** may include a camera portion **80** having a lens feature, such as a camera and/or flash feature **83** and/or **85** respectively. In typical cases, a lens and/or flash feature is not provided. Rather, there is simply an optically transmissive region provided. Such a region may be problematic because it may interfere with the clarity of pictures taken by a camera and/or flash of a housed device. For instance, where a flash is provided, an unprotected optically clear region may allow the transmission of light incident to the camera lens of the underlying device thereby causing pictures taken to be washed out. In other instances, the camera portion simply comprises a cut-out portion of the casing through which pictures may be taken. However, this is not ideal as it may prevent the case from being water resistant. If a camera and/or lens is to be provided in a housing of the disclosure, it may be so provided in such a manner as to be stepped up from the housing. This, however, may not be ideal because it may be hard to clean, easy to scratch, and hard to protect.

Accordingly, as can be seen with respect to FIG. **8**A in certain embodiments, a lens feature **80** is provided wherein one or more lenses, such as a camera **83** and/or a flash **85** lens, are positioned within the top **2** or bottom **3** member of the housing **1** so as to be integral therewith and not substantially stepped up there from. The lens feature may include a lens **83** for a camera and/or another lens **85** for a flash, and may further include an optical skirt **82** surrounding the one or more lenses so as to prevent inerrant light transmission, e.g., to reduce internal reflection and thereby reduce flair.

In fabricating a lens feature, the one or more lenses may be pressed into the top or bottom member, so as to be pressed flush against the housing material. Such a fabrication method may be better than molding because typical molding process using rubber and other such materials are difficult with respect to glass due to the difference in thermal expansions and contraction. Further, it is difficult to make such seals watertight.

Accordingly, in one embodiment, a housing containing a lens element is provided wherein one or more lenses are provided therein. The lenses may be designed to have a diameter that is less, equal, or greater than that of the lenses provided in the underlying device. In fabricating a housing member having a lens element, the housing member may be fabricated, e.g., molded, and a suitable lens provided separately. A mandrel, or other such tool, may then be employed to press the lens feature into the housing member. This will give the lens feature a clean, well fit interface with the surrounding material of the housing member. The lens feature should be

configured such that the transition is flush with no cavities between the lens feature and the housing material.

In certain instances, the camera feature **80** may include an elastomer material into which one or more lenses may be pressed. The elastomer may be configured so as to form an optical divider separating one lens from another, such as a camera lens from a flash lens. Such optical divider may be useful in preventing radiating light from one lens, such as a flash lens **85**, from impinging into the other lens, such as the camera lens **83**. The elastomeric lens containing material may then be added directly to the bottom member **3** or may be added to another material, such as an optically clear plastic material, which plastic material may then be attached to the bottom member **3**, e.g., via an adhesive. For example, a bottom member **3** may be fabricated, such as from a polypropylene material, wherein the bottom member **3** includes a lens feature orifice. A lens containing elastic material may then be fabricated, as described above. A plastic base member may be fabricated and the lens containing elastic material may then be inserted therein. The plastic material may then be attached to the polypropylene bottom member **3**, e.g., via adhesive, so as to cover the lens feature orifice. It is to be noted that the elastomeric skirt may completely circumscribe the lens, e.g., the camera lens **83** or flash lens **85**, or may partially circumscribe the lens, such as in a tong like configuration.

Also depicted in FIG. **8**A is latch door **71**, described above, as well as sound inlet and outlets **60** *a* and b, described herein in greater detail below.

FIG. **8**B provides a cut-away cross section view of the lens feature **80**, e.g., camera feature, of FIG. **8**A. In this embodiment, the lens feature **80** is provided on a bottom member **3** of the housing **1**, although in various other embodiments, the lens feature **80** may be provided on a top member **2**. The camera feature **80** includes a raised lip portion **81** that surrounds an optical skirt **82**. The optical skirt **82** includes a camera lens orifice **84** containing a camera lens **83** and a flash lens orifice **86** containing a flash lens **85**.

FIG. **8**C provides a close up view of the lens feature of FIG. **8**B. The camera feature **80** includes a raised lip portion **81** that surrounds an optical skirt **82**. This configuration provides a liquid proof interface between the bottom housing **3** and the camera feature **80**. The optical skirt **82** includes a camera lens orifice **84** containing a camera lens **83** and a flash lens orifice **86** containing a flash lens **85**, wherein the optical skirt is configured for preventing the transmission of light from one lens to another.

FIG. **8**D provides a top-down view of the lens feature **80** of FIG. **8**C showing the interior of the bottom housing member **3**. The lens feature **80** includes an optical skirt **82**. The optical skirt **82** includes a camera lens orifice **84** containing a camera lens **83** and a flash lens orifice **86** containing a flash lens **85**. It is to be noted that in this embodiment a flash lens **85** is provided, however, in other embodiments, a flash lens need not be present. Rather, a simple optically clear transmissive region may be provided instead. The optical skirt **82** may be configured so as to prevent the transmission of light from the flash to the camera lens.

FIG. **8**E provides a cut-away view of the optical skirt **82** of FIG. **8**D showing the camera lens region **84** and the flash lens region **86**.

FIG. **8**F provides a cut-away cross-section view of the optical skirt **82** of FIG. **8**E, showing the camera lens orifice region **84** with camera lens **83** and the flash lens region **86** with flash lens **85**.

FIG. **8**G provides a cross section view of the optical skirt **82** of FIG. **8**F showing the interior of the bottom housing member **3**. The optical skirt **82** includes a camera lens orifice **84** containing a camera lens **83** and a flash lens orifice **86** containing a flash lens **85**.

FIG. **8**H provides an illustration of the lens **83** and lens skirt **82** interface of the housing **3**. The lens skirt **82** includes a concentric baffle detail which provides an enhanced field of view for the lens **83**. Also provided is an illustration of a suitable camera lens **83** and flash lens **85**.

FIG. **8**I provides an illustration of a camera lens **83** to be fitted within a camera lens aperture **84** of an optical skirt **82**.

FIG. **8**J provides an illustration of a flash lens **85** to be fitted within a flash lens aperture **84** of an optical skirt **82**.

As described briefly above, in certain embodiments, the housing may include a port opening, such as an electrical interface port, for instance, or a charge port. To ensure increased protection of the underlying device, such as to protect the underlying device from dirt, liquid, snow, shock, etc., the housing may additionally include a port cover latch that is capable of opening and closing so as to cover and seal the port opening. The port and/or latch cover may be positioned, for instance, along a perimeter of the housing, such as at a proximal or distal end or a side thereof. In certain instances, the port and port cover latch is a shock and water resistant latch port cover. The port and latch cover may be positioned on a top or a bottom perimeter member of the housing and may be configured for spanning across from one side of the opening to another.

For example, as can be seen with respect to FIG. **9**A, in certain instances, a latch feature **70** may be positioned on a proximal end of the housing **1**. The latch feature **70** includes a port or latch opening bounding member **71***a*, having a port opening therein, and may further include a latch cover **71***b*. The port opening bounding member **71***a* circumscribes the opening, wherein the opening may be configured to receive a charge member for charging an underlying electronic device. The latch feature **70** may also include a latch cover **71***b* that is configured for covering the latch opening bounding member **71***a*. In this embodiment, the latch opening bounding member **71***a* is formed integrally with an interior perimeter portion **20***b* of the top member **2**, which perimeter portion forms a port opening.

The latch feature **70** and port opening bounding member **71***a* may have any suitable configuration. In one embodiment, the latch feature **70** is positioned entirely in one of the upper **2** or lower **3** housing members. Consequently, all of the latch feature components will be positioned entirely on that housing member. In an alternative embodiment, as depicted in FIG. **9**A, the latch feature **70** is configured for spanning from one housing member, e.g., **2**, to the other housing member, e.g., 3. Thus, the opposing housing members **2** and **3** will have corresponding latch feature interfaces that are configured for engaging the latch cover **71***b* so as to seal the port opening bounded by **71***a*. In either instance, the port opening bounding member **71***a* includes an opening, and the port covering **71***b*, e.g., a latch cover, is configured for moving from an open to a closed position so as to cover the port opening.

As can be seen with respect to FIG. **9**A, the latch feature **70** is configured for spanning from one housing member **2** to the other housing member **3**. Accordingly, each of the housing members **2**, **3** will include corresponding latch interfaces. For instance, the latch feature bounding member **71***a* is positioned within the proximal end portion **21** of top member **2**, and the latch feature cover **71** is positioned upon the proximal end portion **31** of bottom member **3**. The latch feature **70** also includes a plurality of latch cover interfaces, such as a latch cover connector **74**, which connector **74** connects the latch cover **71***b* to the bottom member **3**.

The latch cover connector **74** may have any suitable configuration so long as it is capable of interfacing with a latch cover **71***b*, connecting the latch cover **71***b* to a top **2** or bottom **3** member, and facilitating the movement of the latch cover **71**, such as from an opened to a closed position. In this instance, the latch cover connector **74** is configured as a latch axle that is positioned on the proximal end portion **31** of the bottom member **3**. The latch cover connector **74** is positioned below the latch feature bounding member **71***a*, which is contained in top member **2**. The latch cover connector **74** is configured for engaging the latch cover **71***b* via a latch connector orifice **75** so as to assist the latch cover **71***b* in moving from an opened to a closed position, where in the closed position the latch cover **71***b* spans the opening bounded by the latch cover bounding member **71***a*. Thus, the moving of the latch cover **71***b* from an opened to a closed position results in the covering and/or sealing of the opening bounded by the latch cover bounding member **71***a*. In this instance, the latch cover **71***b* is configured for rotating about the latch cover connector **74**.

Above the latch cover bounding member **71***a* is another latch cover interface that is configured for engaging the latch cover **71***b* so as to secure the latch cover **71***b* in a closed position. In this instance, the latch cover interface above the latch cover bounding member **71***a* is a latch ramp receiving member **74**, which latch ramp receiving member **74** is configured for engaging a corresponding latch ramp interface portion **77** of the latch cover **71***b* when the latch cover is in the closed position thereby securing the latch cover **71***b* in the closed position. As depicted, the latch ramp receiving member **74** is positioned on the top member **2** above the latch port opening bounding member **71***a*.

In certain embodiments, the closing of the latch cover **71***b* closes the port opening in a liquid-tight seal. To ensure a liquid-tight seal, the latch feature **70** may have one or more additional features. For instance, the latch feature **70** may include a gasket **78**, such as an O-ring or other depressible gasket. For example, as depicted in FIG. **9**A, the latch cover **71***b* includes a gasket **78**, which gasket is of a dimension so as to be fitted within the opening of the latch opening bounding member **71***a* such that as the latch cover **71***b* is moved from an opened to a closed position, the gasket **78** is fitted within the port opening, thereby sealing the port. In other embodiments, the gasket **78** is configured for not fitting entirely within the latch port opening, but rather surrounding it.

As depicted in FIG. **9**B, the latch opening bounding member **71***a* includes a gasket interface surface **73** that is positioned in such a manner so as to interact with the gasket **78***a* and thereby provide a watertight seal when the latch cover **71***b* is in the closed configuration, e.g., when the latch ramp interface **77** is coupled to the latch ramp **76**. One or more of the gasket seat **73** and gasket **78***a* may be positioned on a latch cover bounding member **71***a* or may be positioned on a latch cover **71***b* or both. In certain embodiments, the gasket **78***a* may further include an over-gasket **78***b*, which over gasket may be less compressible, less porous material, such as rubber, laminated material, or elastomeric or formed elastomeric material, so as to effectuate a firmer sealing of the latch feature **70**.

To facilitate this interaction, in certain embodiments, it may be beneficial for the housing member, e.g., housing member **2**, having the port opening bounding member **71***a* therein to include an additional rigid structural feature **72**, which structural feature **72** may be positioned in such a manner as to provide increased structural integrity to the port opening bounding member **71***a* and thereby provide additional support for the port opening. For example, in certain instances, when there is a port opening bounding member **71***a* in a top member **2** of the housing **1**, the port opening may have a tendency to make the immediate surrounding material weaker. Therefore, a rigid support material **72** may be associated with this material so as to support the region surrounding the port opening.

Without the inclusion of the rigid support material the top and bottom portions surrounding the opening may be forced away from one another thereby compromising the ability of the opening to be sealed in a watertight manner. In such an instance, the rigid stiffening material may be added so as to insure the integrity of the port opening. In certain instances, this reinforcing is accomplished without thickening the material of the housing member because this might result in making the overall housing thicker, wider, and/or longer, although it can be done in this manner.

In an alternative embodiment, therefore, as provided in FIG. **9**B, a rigid element **72** is added to the top member **2** having the port opening **71***a* therein. For instance, an injection molded stiffener, such as a stainless steel, magnesium, rigid plastic component, polycarbonate, or the like may be included in the top member **2** and associated with the material surrounding the port opening **71***a* so as to provide increased rigidity thereto, thereby maintaining the physical integrity of the port opening and preventing flexing. It is to be understood that although the above has been described with respect to the port opening being positioned in the top member **2**, the port opening can be positioned in the bottom member **3** as well with consequent changes to the other latch features.

Accordingly, FIG. **9**B provides a cut-away view of the proximal end of the housing **1** having the latch feature **70** of a housing of the disclosure. The latch feature **70** includes a port opening bounding member **71***a* having a latch cover **71***b*. As depicted, the top member **2** includes the port opening bounding member **71***a* having a latch ramp receiving member **76** associated therewith. The latch opening bounding member **71***a* bounds an opening, e.g., a port opening, in the top member **2**. The bottom member **3** includes a latch axle, e.g., a pivot axle **74**. A latch cover **71***b* interfaces with the pivot axle **74** on the bottom member **3** via axle receptacle **75**. The latch cover **71***b* additionally includes a latch ramp interface portion **77** that interfaces with the latch ramp receiving member **76** of the port opening bounding member **71***a* of the top member **2**. Accordingly, when the latch cover **71***b* is in the closed position the latch ramp interface portion **77** couples with the latch ramp **76** to close and/or seal the port opening. It is to be noted, in this embodiment, both the top and bottom members **2** and **3** include corresponding channel members **10**.

FIG. **9**C depicts a cross section of a latch feature **70** of the disclosure. The latch feature **70** is in a closed position. Depicted is a bottom member **3**, having a back surface **35***b* and a proximal end **31** perimeter portion **30**. The bottom member **3** includes a channel **10**, which channel is bounded by bounding members **30***a* and *b*. The channel **10** includes a gasket **15**. The bottom member **3** also includes a pivot axle **74**.

A latch cover **71***b* is also provided. The latch cover **71***b* interfaces with the pivot axle **74** on the bottom member **3** via a pivot axle interface **75**. The latch cover **71***b* therefore includes a pivot axle interface, e.g., configured as an axle orifice **75**. The axle orifice **75** is configured for receiving the pivot axle **74** therein. The interaction between the pivot axle **74** and the pivot orifice **75** allows the cover **71***b* to rotate about the axle **74** so as to move from an open to a closed position. Additionally, the latch cover **71***b* includes a latch ramp interface portion **77** that interfaces with the latch ramp receiving

member **76** of the latch opening bounding member **71***a* of the top member **2** so as to secure the latch cover **71***b* in the closed position.

Accordingly, also depicted is top member **2** having a top surface membrane **25**. The top member **2** includes a proximal end portion **21**. The proximal end portion **21** includes an outer perimeter portion **20***b*, which outer perimeter portion is comprised of a semi-flexible material, and an interior perimeter portion **20***a*, which interior perimeter portion is comprised of a rigid material.

The proximal end portion **21** of the top member **2** also includes a port opening. The port opening is bounded by a port opening bounding member **71***a*. In this instance, the outer perimeter portion **20***b* includes a cutout portion, which cutout portion accommodates the port opening bounding member **71***a*. The port opening bounding member **71***a* may therefore be contiguous with, e.g., formed by, the rigid material comprising the interior perimeter portion **20***a*, or may be added thereto.

For instance, as depicted, the top member **2** may include a rigid stiffening member **72** which stiffening member may be associated with the port opening bounding member **71***a*. For example, in certain embodiments a rigid member **72** may be included around the port opening so as to increase the dimensional integrity of the proximal end portion **21** of the housing **2** surrounding the opening. The port opening bounding member **71***a* may also include a gasket interface **73** that is configured for interfacing with a gasket, such as a gasket **78** associated with a latch cover **71***b*, e.g., a gasket that is dimensioned for fitting within or over the port opening and sealing the port opening when the latch cover **71***b* is in a closed position.

The port opening bounding member **71***a* and/or rigid stiffener **72** of the top member **2** may be formed from the interior perimeter portion **20***a* of the top member **2**, or may be one or more separate elements added thereto. Where the port opening bounding member and/or rigid stiffener **72** are a separate element added to the proximal end **21** of the top member **2**, the port opening bounding member **71***a* and/or stiffener **72** may additionally be configured for engaging the components of a bottom member **3** clasping mechanism **37**. The port opening bounding member **71***a* and/or stiffener **72**, therefore, may be configured to include a clasping mechanism component that is configured for interfacing with the clasping member **37** of the bottom member **3**. In this manner, the bottom member interfacing portions of the port opening bounding member **71***a* and/or stiffener **72** and/or gasket seat **73** are configured for maintaining the consistent sealing along the perimeter of the housing **1**.

The port opening bounding member **71***b* further includes a latch ramp receiving member **76** that is configured for coupling with a corresponding latch ramp interface portion **77** of a latch cover **71***b*. Accordingly, when the latch cover **71***b* is in the closed position the latch ramp interface portion **77** couples with the latch ramp receiving member **76** to close and/or seal the port opening. The port opening bounding member may additionally include a gasket seating member **73**, which member may be a rigid, semi-rigid, or flexible member that is configured for interfacing with a gasket **78** of the latch cover **71***b* so as to provide a liquid-tight seal when the latch cover **71***b* is in the closed position.

FIG. **9**D provides a cross section view of the housing **1** set forth in FIG. **9**A. A top member **2** having a port opening bounding member **71***a* is provided, wherein the port opening bounding member **71***a* is integrally formed as part of the interior perimeter portion **20***a* of the top member **2** and forms a port opening which in part makes up the latch feature **70**. The latch feature **70** also includes a latch cover **71***b* positioned on the bottom member **3**. The latch cover **71***b* is in a closed position. The latch cover **71***b* includes an axle orifice **75** that interfaces with the pivot axle **74** on the bottom member **3**. Additionally, the latch cover **71***b* includes a latch ramp interface portion **77** that interfaces with the latch ramp receiving member **76** of the latch opening **71***a* of the top member **2** so as to secure the latch cover **71***b* in the closed position.

FIG. **9**E provides an angle view of the proximal end portion of the housing **1** of FIG. **9**D showing the latch assembly **70** having port opening bounding member **71***a*, a latch cover **71***b*, and a pivot axle **74**. As depicted the latch cover **71***b* is disassembled from the latch assembly **70** and disassociated from the pivot axle **74**. The port opening bounding member **71***a* is formed in conjunction with the interior perimeter portion **20***a* of the top member **2**. As can be seen, the exterior perimeter portion **20***b* of the top member **2** has been cut away to make room for the latch feature **70**. However, in this embodiment, the port opening bounding member **71***a* includes a latch mechanism that is configured slightly differently than the latching mechanism of FIG. **9**D. In this instance, the latching mechanism includes a latch ramp **76** that is configured as extended member that is adapted for associating with a corresponding latch ramp receiving interface portion **77** of the latch cover **71***b*. The latch cover **71***b* further includes a depressible gasket **78**.

FIG. **9**F provides another cross section view of the proximal end portion depicted in FIG. **9**E, with the latching assembly provided in FIG. **9**A. The latch assembly **70** includes a port opening bounding member **71***a* and a latch cover **71***b* having an axle orifice **75**, wherein the latch cover **71***b* is disassembled from the latch assembly **70** and the axle orifice **75** is disassociated from the pivot axle **74**. The port opening bounding member **71***a* is formed in conjunction with the interior perimeter member **20***a* of top member **2**. As shown, the exterior perimeter portion **20***b* of the top member **2** has been cut away to make room for the latching feature **70**. Accordingly, the rigid gasket seat **73** is comprised of the same material as the port opening bounding member **71***a*. It is understood that in different embodiments, the gasket seat **73** may be comprised of a different material than that of the interior perimeter portion **20***a* of the top member **2**, such as a semi-rigid or flexible material. The port opening bounding member **71***a* additionally includes a latch ramp receiving member **76** that is configured for associating with the latch ramp interface portion **77** of the latch cover **71***b*. As depicted, an interior sound transmission portion **60***b* is also shown.

FIG. **9**G provides a side cross section view of the proximal end portion depicted in FIG. **9**B. The latch assembly **70** includes a port opening bounding member **71***a* and a latch cover **71***b* having an axle orifice **75**. The latch cover **71***b* is disassembled from the latch assembly **70** and the axle orifice **75** is disassociated from the pivot axle **74**. The port opening framing member **71***a* is formed and a rigid stiffener member **72** and gasket seat **73** is then associated therewith. Accordingly, in this embodiment, the top member **2** includes both a rigid stiffening member **72** and a semi-rigid gasket seat **73**, which members are associated with the port opening framing member **71***a*.

As depicted, the rigid stiffening member **72** and/or gasket seat **73** includes a gasket engaging portion that fits within the channel **10**, e.g., between the interior and exterior bounding members **30***a* and *b* of the bottom member **3**, so as to contact and/or compress the gasket **15**. One of the port opening framing member **71***a*, rigid stiffener **72**, and gasket seat **73** includes a clasping mechanism **27** that is configured for coupling with the clasping mechanism **37** of the bottom member

3 so as to maintain a consistent seal with the top and bottom members when they are coupled together to form the housing 1.

It is to be noted, however, in certain instances, the port opening bounding member 71*a* and/or stiffening member 72 and or gasket seat 73 may be fabricated so as to be fit within the interior perimeter portion 20*a* and/or exterior perimeter portion 20*b* of the top member 2. In such instances, the port opening bounding member 71 and/or rigid stiffening member 72 and/or gasket seat 73 may not need to have these gasket engaging and/or clasping elements. For instance, where the interior bounding member 71*a* is fabricated in conjunction with the interior perimeter portion of the top member 2. It is also to be noted that in various instances, a separate port opening bounding member 71 and rigid stiffening member 72 may not be included, rather, in various instances, their separate functions may be fulfilled by a single port bounding member that is rigid enough to bound the port opening without unduly increasing the dimensions of the housing as a whole.

As depicted, a gasket interface 73 is also included. The gasket interface is configured as a gasket seat that is adapted for interfacing with a gasket, such as a closed cell form or solid gasket 78 associated with a latch cover 71*b*. The gasket seating member 73 is configured for interfacing with the gasket 78 of the latch cover 71*b* and thereby provides a liquid-tight seal when the latch cover 71*b* is in the closed position. In various instances, the gasket seating member 73 is the same element as the port opening bounding member 71*a* and/or may be the same member as a rigid stiffener 72.

FIG. 9H provides a proximal end exploded view depicted in FIG. 9F. The latch assembly 70 includes a port opening bounding member 71*a* and a latch cover 71*b* having an axle orifice 75, wherein the latch cover 71*b* is disassembled from the latch assembly 70 and the axle orifice 75 is disassociated from the pivot axle 74. The port opening bounding member 71*b* is formed in conjunction with the rigid stiffener 72 and the rigid gasket 73.

As can be seen, the port opening bounding member 71*a* is configured to include a clasping mechanism portion 27 that is adapted for interfacing with a corresponding clasping mechanism 37 of a bottom member 3. The port opening bounding member 71 is configured for engaging the gasket 15 and interior bounding member 20*a* of channel 10 and is further configured for engaging the bottom member clasping mechanism 37. It is to be noted, however, that in certain embodiments the port opening bounding member 71*a* may be formed in conjunction, e.g., integral, with an interior perimeter portion 20*a* of the top member 2, and therefore in certain instances, the port opening bounding member 71*a* does not include a separate rigid stiffener, gasket seat, and/or clasping mechanisms. The port opening bounding member 71*a* additionally includes a latch ramp receiving member 76 that is configured for associating with the latch ramp interface portion 77 of the latch door 71*b*. Also depicted is a sound transmission port 60*b*.

FIG. 9I provides a side cross section view of the latch feature 70 positioned at the proximal end of the housing of FIG. 9A. As can be seen, the port opening bounding member 71*a* is configured to include a clasping mechanism portion 27 that is adapted for interfacing with a corresponding clasping mechanism 37 of a bottom member 2. The port opening bounding member 71*a* also includes a portion for engaging the gasket 15 and interior channel boundary member 20*b*. The port opening bounding member 71*a* further includes a latch ramp receiving member 76 that is configured for associating with the latch ramp interface portion 77 of the latch cover 71. The latch cover 71 is in the closed position and the latch ramp receiving member 76 is coupled with the latch ramp interface 77. The gasket 78*a* is further associated with an over-material 78*b*, which material functions to provide increased structural integrity to the gasket 78*a*.

FIG. 9J provides a side, close up, cross section view of the latch ramp sealing surface 76 of the port opening bounding member 71*a*, and the latch ramp interface 77 of the latch cover 71*b*. The latch cover 71*b* is further associated with a gasket 78.

FIG. 9K provides a side, close up view of the port opening bounding member 71*a* showing the association between the rigid stiffener 72 and the rigid gasket seat 73. The rigid stiffener 72 is configured so as to assist in maintaining the dimensional integrity of the bounding member 71*a* and to assure that a suitable sealing pressure is asserted between the gasket seat 73 and the gasket 78 thereby insuring a liquid-proof seal when the latch cover 71*b* is in the closed position. The bounding member 71*a* includes a portion for engaging the gasket 15 and interior channel boundary member 20*a*, thereby ensuring a firm seal is established upon the coupling of the top and bottom members. The bounding member 71*b* also includes a clasping mechanism 27 for engaging clasping mechanism 37. As depicted, sound transmission port 60*b* is also illustrated.

Accordingly, in certain embodiments, a perimeter portion of the housing may include additional features, such as one or more sound ports configured for enhancing the transmission of sound through the housing. One such sound port is configured as an acoustic vent portion, which acoustic vents are adapted for transmitting and/or directing sound there through such as toward a microphone portion, or away from a speaker portion, of an underlying electronic device housed within the housing.

For instance, the perimeter portion, such as a distal or proximal end portion, may include an acoustic vent feature for transmitting sound. The acoustic vent feature may include a sound channel having an acoustic vent material positioned therein. The acoustic vent material may span the sound channel at an angle from 0 to 180 degrees in a forward or reverse direction. The sound channel may extend from an exterior portion of the perimeter to an interior portion of the perimeter and the acoustic vent material may transect the sound channel, e.g., at an angle with respect to a centerline there through.

As can be seen with respect to FIG. 10A, a proximal end portion of the housing 1 may include one or more, such as a plurality of sound transmission portions 60 *a* and *b* having a plurality of acoustic vents, for instance, a microphone acoustic vent 65*a* and a speaker acoustic vent 65*b*. The proximal end portion of the housing may further include a latch feature 70 having a port opening latch cover 71*b* and a coin slot feature 18, which coin slot opening is configured for assisting in the separating of the top member 2 from the bottom member 3.

FIG. 10B provides an interior outward view of the proximal end portion of FIG. 10A. As depicted the sound transmission portions 60 *a* and *b* are positioned on the top member 2. However, it is understood that they may alternatively be positioned on the bottom member 3. The proximal end portion 21 of the top member 2 includes a plurality of sound transmission portions 60 *a* and *b* including a sound channel 66*a* leading to a microphone acoustic vent 65*a*, and a second sound channel 66*b* leading to a speaker acoustic vent 65*b*.

As can be seen with respect to FIG. 10B, the sound transmission portions 60 are positioned within a top member 2 and traverse from the outside of the housing 1, through the exterior and interior perimeter portions 20 *a, b* of the top member

2 and into the interior of the housing 1. The acoustic channels 66 *a, b* include respective acoustic membranes 65 *a, b* that transect the acoustic channels 66 *a*, b.

The housing surrounding the acoustic membranes 65 *a, b* may be configured so as to be overmoulded therewith. Hence, the sound channels 66 *a* and *b* may further include overmould portions 67 *a, b*, which portions are configured to interface with a perimeter portion of the membranes 65 *a, b* so as to be overmoulded therewith and thereby secure a liquid-tight seal between the housing and the acoustic membranes.

However, in various embodiments, elements 67 *a, b* may simply form a gasket seat upon which acoustic vent membranes 65 *a, b* are positioned. Nevertheless, in this embodiment, as can be seen with respect to FIG. 10B, the sound transmission channel 60*a* channels sound to a microphone portion of a housed device. In such an instance, it may be useful to have an overmould portion, e.g., 68*a*, which overmould portion circumscribes the acoustic membrane so as to provide an interface between the acoustic membrane 65*a* and the speaker portion of an underlying device. This interface may be useful for preventing the internal transmission of sound from the speaker channel 60*b* to the microphone channel 60*a*, which transmission could create interference with respect to the microphone portion of the underlying device. Additionally, such a raised, circumscribing element can also prevent the degradation of sound entering the microphone channel 66*a* by focusing and directing it to the microphone portion of an underlying device.

The acoustic membranes 65 *a, b* are transmissive for sound but are non-transmissive for liquid. Thus, sound can travel through the sound channels 66 *a* and *b* in the housing but liquid, such as water, cannot because it cannot pass through the acoustic vent membranes 65 *a* and b. A latch feature 70 and latch cover 71*b* are also provided on the proximal end of the housing 1 in between the two sound transmission portions 60 *a* and b.

FIG. 10C provides an exterior inward view of the proximal end portion of the housing 1 of FIG. 10A. The proximal end portion may include a plurality of sound transmission portions, e.g., 60 *a* and b, each of which may include a sound channel 66 that is transected by an acoustic membrane 65. For instance, one sound transmission portion, such as 60*a*, may be configured as a microphone transmission portion that includes a sound channel 66*a* leading toward a microphone portion of an underlying device. The sound channel 66*a* is transected by microphone acoustic vent 65*a*. The second sound transmission portion, such as 60*b*, may be configured as a speaker sound transmission portion that includes a sound channel 66*b* leading toward a speaker portion of an underlying device. The sound channel 66*b* is transected by a speaker acoustic vent 65*b*. It is understood that these positions could be reversed. One or more of the sound channels 66 *a* and *b* may further include a molded grill portion 68 *a* and/or b, which functions to provide structural integrity to the sound channel and/or support to the acoustic vent materials 65 *a* and/or b.

As can be seen with respect to FIG. 10C, the acoustic vent portions 60 and b are positioned within a top member 2 and traverse from the outside of the housing 1 into the interior of the housing. However, they could just as well be positioned on a bottom member 3. The acoustic channels 60 *a, b* include respective acoustic membranes 65 *a, b* and grille portions 68 *a, b*, which grille portions are configured for providing additional support for the acoustic membranes. A latch feature 70 and latch cover 71*b* are also provided on the proximal end of the housing 1 in between the two sound transmission portions 60.

FIG. 10D provides a top-down, inside out view of the microphone acoustic vent 60*a* portion of a housing 1 of the disclosure. The acoustic vent portion 60*a* includes a sound channel 66*a*, wherein the sound channel 66*a* tappers toward a microphone acoustic vent material 65*a*, which sound channel is configured for directing sound toward a microphone portion of an underlying electronic device housed within the housing 1. An acoustic vent bounding member, e.g., an overmoulded skirt sea 67*a* is also included and circumscribes the acoustic vent membrane 65*a*. For instance, a portion of the acoustic vent material 65*a* has been overmoulded with a rigid material 67 a so as to facilitate the isolation and reduction of internal transmission of sound, such as from the speaker vent portion, so as to prevent interference therewith, and may further strengthen the seal between the housing and the acoustic membrane thereby ensuring the liquid-proof nature of the acoustic vent 60 *a*. As indicated above, in various embodiments, the acoustic vent bounding member 67 may be configured simply as a gasket seat, which gasket seat is adapted so as to be coupled with a suitable acoustic vent material 65 *a*, e.g., via a suitable adhesive. Also provided is an additional structural support, e.g., grille 68*a*, which grille 68*a* provides additional structural integrity to the acoustic membrane 65*a*.

FIG. 10E provides an inside view of the speaker acoustic vent portion 60*b* of FIG. 10C. The acoustic vent portion 60*b* includes a sound channel 66*a* that tappers toward an acoustic vent material 65*b*. An overmoulded acoustic vent bounding member 67*b*, is also included, wherein the bounding member 67*b* at least partially circumscribes the perimeter of the acoustic vent material 65*b* so as to enhance the sealing contact between the housing and the vent material as well as providing an additional contact for directing sound from a speaker portion of an underlying device through the speaker sound channel 66*b*. It is noted that although in this embodiment a bounding member 67*b* is included herein, in various embodiments it need not be.

FIG. 10F provides a cross section of the speaker acoustic sound transmission assembly 60*b*. The assembly includes a sound channel 66*b* for transmitting and directing the transmission of sound toward an acoustic vent material 65*b*. The acoustic vent material 65*b* may be a membrane, such as a GoreTex® membrane, which membrane may be cantered at an angle from 0 to 180 degrees, such as from 90 to 180 degrees. The acoustic vent material 65*b* is bounded by an acoustic vent bounding member 67*b* that may be overmoulded therewith or fabricated prior to attachment of the acoustic vent material 65*b*. The acoustic vent assembly 60*b* may also include an acoustic grille 68*b* to provide additional structural integrity to the acoustic vent. It is to be noted that although the sound transmission portions 60 are positioned on a proximal end of the housing 1, they could be positioned anywhere along the perimeter of the housing without departing from the nature of the disclosure.

FIG. 10F provides a cross section of the microphone acoustic sound transmission assembly 60*a*. The assembly includes a sound channel 66*a* for transmitting and directing the transmission of sound toward an acoustic vent material 65*a*. The acoustic vent material 65*a* may be a membrane, such as a GoreTex® membrane, which membrane may be cantered at an angle from 0 to 180 degrees, such as from 90 to 180 degrees. The acoustic vent material 65*a* is bounded by an acoustic vent bounding member 67*a* that may be overmoulded therewith or fabricated prior to attachment of the acoustic vent material 65*a*.

In this embodiment, the acoustic vent bounding member 67*b* has a straight horizontal edge configuration. However, in

various other embodiments, the edge of the acoustic vent bounding members **67***a* and/or **67***b* may be slanted. Such a slanted edge could be useful so as to create an air gap, which air gap could be useful in directing sound toward the bottom or top of the case whereby increased sound amplification and or transmission may result.

For instance, one or more air gaps may be positioned within the housing **1** so as to direct sound to be emitted through the front or back surface of the housing thereby increasing surface of sound transmission. For example, the sound channels **66** *a* and *b* have a limited capacity for transmitting sound there through. Placing one or more sound gaps, such as along a sound channel perimeter portion **67** *a* and b, e.g., along a top or bottom facing surface, can act as a sound channel funneling sound toward and through the larger top and/or bottom surface thereby acting like sound resonator and enhancing the sound transmitting surface. Additional air gaps may be positioned along the top **2** and/or bottom **3** members of the housing **1**, e.g., along the circumference such as where a front **25** or bottom **35** surface meets a perimeter portion, so as to enhance sound transmission. In this manner at least 10%, for instance, at least 15%, such as at least 20%, for example, at least 30%, such as at least 40%, for instance, at least 50% of the sound energy emitted from a housed device may be directed and emitted from a front **25** or back **35** surface of the housing.

The acoustic vent assembly **60***a* may also include an acoustic grille **68***a* to provide additional structural integrity to the acoustic vent. It is to be noted that although the sound transmission portions **60** are positioned on a proximal end of the housing **1**, they could be positioned anywhere along the perimeter of the housing without departing from the nature of the disclosure.

FIG. **10**G provides a close up view of the acoustic vent assembly **60***b* of FIG. **10**F. The vent assembly **60***b* includes an acoustic port **66***b* including a shaped channel leading to an acoustic membrane **65***b*. The acoustic membrane **65***b* is overlaid with an acoustic grille **68***b* and bounded by housing portion **67***b*. The acoustic grille **69***a*/acoustic membrane **67***a* interface includes one or more air gaps to facilitate the transmission of sound. Although not depicted herein, in various embodiments, a vent assembly, such as vent assembly **60***b* may include an additional vent overlay or screen, such as a mesh scrim, which scrim may be positioned over, e.g., attached to, the acoustic membrane, e.g., **65***b*, so as to reduce distortion, such as distortion from a speaker portion of a housed device. Such a scrim may be fabricated from any suitable material so long as it is capable of transmitting sound energy in an efficient manner, such as a thin plastic material membrane, which membrane may be adhesively attached or otherwise mounted to the acoustic membrane **65***b*.

FIG. **10**H provides a cross section view of a speaker acoustic vent assembly **60***b*. The acoustic vent assembly **60***b* includes a port **66***b* configured as a tapered channel for directing sound toward a speaker acoustic material **65***b*, such as a membrane, e.g. a GoreTex® membrane, configured for receiving and transmitting sound, but is not transmissive to liquids, such as water. The acoustic membrane **65***b* is circumscribed by an bounding region **67***b* and may further be overlaid by an acoustic grille **68***b*.

FIG. **10**I provides a further cross section view of the speaker acoustic vent assembly of FIG. **10**H. The acoustic vent assembly **60***b* includes a port **66***b* configured as a tapered channel for directing sound toward a speaker acoustic material **65***b*, such as a membrane configured for receiving and transmitting sound. The acoustic membrane **65***b* is circumscribed by a bounding region **67***b* and may further be overlaid by an acoustic grille **68***b*. The interface between the grille and acoustic membrane may be configured to include various airgaps there between.

FIG. **10**J provides another example of an acoustic vent assembly. In this instance, the acoustic vent assembly is fabricated as a single member including both a microphone acoustic vent assembly **60***a* and a speaker acoustic vent assembly **60***b*, such as could be used in an embodiment provided with respect to that of FIG. **19**. As depicted the microphone and speaker assemblies **60** *a* and *b* are formed within a larger framework portion **5**, which framework portion is adapted as an end portion that is capable of being inserted into a larger housing **1**. The framework portion **5** includes a plurality of sound transmission portions **60** and b, having sound channels **66** *a* and b, and further includes a latch port portion **70**.

Additionally, the framework portion **5** may include one or more clasping mechanisms, gaskets, gasket seats, and or channels as described herein. For instance, where the framework portion is meant to be inserted into a housing **1**, the framework portion **5** may include a circumferential clasping mechanism that may additionally include a circumferential gasket and/or gasket seat, which together are designed to create a waterproof sealing between the housing **1** and framework portion **5** when the two are sealably coupled together.

As depicted, the sound channels **66** *a* and *b* include acoustic vent membrane seats **67** *a* and *b* that are angled with respect to a transverse central line of the channels **66** *a* and b. Hence, when the acoustic vent membranes **65** *a* and *b* are attached thereto they are angled. The angling of the acoustic vents **65** *a, b* is configured such that the surface area of the included vent material is increased thereby increasing the transmission of sound through the sound channels **66** *a* and b. A latch feature **70**, as described herein, is also included, as well as grooves that are adapted to receive an external latching mechanism, which may be employed so as to further secure the framework portion **5** to the housing **1**. For instance, see FIG. **19**.

FIG. **10**K provides a cross section view of the end member framework portion **5** having the acoustic vent assembly of FIG. **10**J. The framework portion **5** is attached to the housing **1** via corresponding clasping mechanisms **27** and **37**. The framework portion further includes a channel **10** having a gasket **15** therein, such that as the end member framework portion **5** is coupled to the housing **1***a* liquid tight seal is provided thereby. The framework portion **5**, further includes a microphone acoustic vent portion **60** *a*. The microphone acoustic vent portion includes an acoustic channel **66***a* leading to a microphone acoustic vent material **65***a*, which vent material **65***a* is held in place by an acoustic vent seat **67***a*. The acoustic vent material **65***a* is positioned within the channel **66***a* at an angle so as to increase the cross sectional area of the vent material for improved sound transmission.

FIGS. **10**L and **10**M provide a close up cross section view of the acoustic vent assembly **6***a* of FIG. **10** providing a microphone sound channel **66***a* leading to an acoustic vent material **65** *a*, which vent material is angled with respect to the channel **66***a*. As can be seen, the end member **5** includes a channel **10** within which a gasket **15** may be positioned.

In certain embodiments, a perimeter portion of a housing of the disclosure may include one or more fabricated switch or button features. For instance, a switch or button feature for engaging a switch or button mechanism of an encased device, such as a silence switch or volume control or "on"/"off" button, may be provided. As can be seen with respect to FIG. **11**A, a switch feature **90** may be included on a portion of the housing **1**, such as on one of the opposing side portions. The

perimeter of the housing **1** may further include other features such as one or more volume control buttons **99** *a*, b; a coin slot feature **18**; one or more sound transmission portions **60**, a latch feature **70**; and the like.

The switch **90** and button **99** features are fabricated along with the housing **1** and are specifically configured for engaging the corresponding switches and buttons of a housed device. Hence, the switches and buttons are designed to model and ensure both the functionality and aesthetics of the underlying switches and buttons of the underlying device.

FIG. **11**B provides a close up view of FIG. **11**A showing the perimeter portion of the housing **1** that contains the silence switch feature **90** and volume buttons **99**. The housing **1** includes a top housing member **2** having a perimeter portion **20**, and a bottom housing member **3**, having a perimeter portion **30**. As depicted, the switch feature **90** and volume buttons **99** are positioned along a perimeter portion **20** of the top member **2**, but in other embodiments may be positioned on the bottom member **3**.

In this embodiment, the style of the switch **90** and button **99** features are designed to retain the stylistic features and functionality of the switches and buttons of the underlying device. The silence switch **90** is configured for engaging a respective silence switch of a housed device so as to silence the noise feature of the housed device. The volume control toggles or buttons **99** *a* and *b* are configured for engaging their corresponding buttons on a housed device for the increasing and decreasing of the volume of an underlying device. These configurations may differ as the configuration of the underlying device differs. For instance, one or more extension elements, such as compressible plug elements may be included to increase the functionality of the button or switch members.

The perimeter portion **20** of top member **2** additionally includes an earphone jack **50** having a port sealing bung **53** inserted therein. It is to be noted that one or more of these features could be positioned along the perimeter portion **30** of a bottom member **3** as well. Additionally depicted is a top surface membrane **25** of top member **2**, which top member **2** includes a video camera lens or optically clear region **47**, a proximity sensor **48**, and an acoustic vent portion **44** including an sound transmission aperture **49** for transmitting sound through the top member membrane **25**. The bottom front surface **35***a* of the bottom member **3** includes stand-offs **16**.

FIG. **11**C provides a cutaway side view of the silence switch feature **90**, volume toggles **99** *a, b* as well as earphone jack port **50** with port sealing bung **53** inserted therein as depicted in FIG. **11**A. The silence switch feature **90** includes an actuator base **92**, which may be fabricated from a rigid material, and may include an axle or rocker **95** that pivots along with the base **92** so as to effectively engage a silence switch of a housed device. Also depicted are switch interfaces **93**, which interfaces are configured for engaging opposing sides of a switch of an underlying device such that as the switch feature **90** rotates about rocker **95**, the switch is translated from one position to another. It is to be noted that the rigid actuator **92**, the rocker **85**, and the switch interfaces **93** may be configured as one complete element or two or three separate elements that are joined together.

Volume control toggles **99** *a* and *b* include a flat user engagement surface portion, which may be engaged by a user and an extended button engagement portion that is configured for engaging a button of a housed device. One or more additional spacers may be added to the extended button engagement portions so as to enhance the engagement of the buttons of a housed device.

Also depicted is earphone jack port **50** having port sealing bung threads **54***a*. A port sealing bung **53** having corresponding threads **54***b* to the earphone jack port threads **54***a* is also provided. The port sealing bung **53** further includes a gasket **55** circumscribing the port sealing bung **53**. It is noted that although the gasket **55** is depicted as being associated with the port sealing bung **53**, it other instances it may be associated with the earphone jack port **50**. In this embodiment, the port sealing bung **53** is inserted into the earphone jack port **50**, bung threads **54***b* are aligned with port threads **54***a*, and the gasket **55** is compressed by the screwing of the port sealing bung **53** into the bung port **50** thereby creating a watertight sealing therewith.

FIG. **11**D provides a cross section view of the silence switch feature **90**. The switch feature may be configured as a slider switch **90**, which slider switch **90** includes a switch housing **91**, an actuator top member **94**, having a rigid actuator switch base **92** and switch interface **93**. The silence switch feature **90** further includes an axle or rocker **95** about which the actuator top member **94** and switch interface **93** rotates. The switch interface **93** may include two opposed teeth members or a cavity portion for surrounding opposing sides of a switch, e.g., a silence switch, of an underlying device.

Accordingly, the switch interface **93** couples with a slider switch, such as a silence switch of an underlying device, so as to manipulate the silence switch, e.g., from a normal to a silenced position. For instance, a user may place a downward force on the rigid actuator top member **94** thereby causing the base member **92** to rotate along with axle **95** and causing the wings or cavity of the switch interface **93** to move upward. In a manner such as this the downward force on the actuator top member **94** is translated into an upward force on the switch interface **93** and silence switch of an underlying device thereby moving the silence switch from a first to a second position, e.g., from an "off" to an "on" position.

It is to be noted, that although the switch feature **90** has been described as having various switch components with respect to FIG. **11**D, various of the switch components may be included or excluded or modified without departing from the nature of the switch feature **90** so long as the switch feature is capable of engaging and manipulating a switch of an underlying device. For instance, in certain instances, a switch feature **90** may include a flexible, semi-rigid switch housing **91**, which housing includes one or more switch interface portions **93** that are associated with an inside surface of the housing **91**, which switch interface portions **93** are configured for engaging a switch of the underlying device. In such an instance, the switch housing **91** may be a raised member that is configured for being depressed in an up or down direction, which depression allows one of the switch interface portions **93** to engage and manipulate the switch of a housed device either upwards or downwards. A reinforced base portion **92** may also be included if desired.

FIG. **11**E illustrates several different views of a silence switch feature **90**. The silence switch feature **90** shows a housing **91** configured to include a slider switch top member **94** and a silence switch interface **93**. As depicted the silence switch top member **94** is associated with a rigid actuator base member **92** and rigid actuator switch interface **93**, which elements rotate about a rocker, e.g., axle, member **95** as the switch feature **90** is manipulated to move the switch interface **93** upwards or downwards and consequently moving a silence switch of an underlying device "on" or "off".

As illustrated the silence switch feature **90** includes an actuator switch housing **91** that overlays the switch top member **94**, axle **95**, and base member **93**. The switch feature **90** may additionally include an adhesive, such as applied to a top

member **94**, or a barb features such as applied to the axle portion **95**, so as to secure the top member **94** within the housing member **91**. As the top member **94** is manipulated, e.g., moved upward or downward in a linear direction, the base member **93** rotates about the axle **95** thereby causing the switch interface **93** to translate the switch of an underlying device in an opposing linear direction, e.g., thereby silencing or un-silencing the underlying device.

Also depicted is a housing for the switch feature **90**. As depicted, an interior perimeter portion **20***a* of a top member **2** is provided. The interior perimeter portion **20***a* of the top member includes a switch cutout portion into which a switch feature **90**, as described above, may be fitted. The switch feature **90** therefore extends from an insider perimeter of the housing **1** toward an outside perimeter portion of the housing **1**. The exterior perimeter portion **20***b* of the top member **2** forms an exterior portion of the switch housing **91** so as to cover the external switch components. Consequently, the top member **2** may be fabricated so as to form a switch housing portion **91** on its perimeter portion into which a suitable switch **90** is fitted, e.g., post production.

FIG. **11**F provides an inside view of the silence switch mechanism **90**, which switch mechanism **90** includes a switch top member **94** that is not seen, which top member **94** extends from an interior portion **20***a* of the top member **2** to an exterior portion **20***b* thereof. As the top member **94** is engaged by a user it thereby moves about axle **95**. The axle **95** is adapted for allowing the rigid actuator base **92** to also rotate around the axle **95**. Hence, the switch feature **90** is configured such that as the switch top member actuator **94** rotates about the axle **95** within the switch housing **91**, the switch interface **93** causes the switch to move from a first to a second position, such as from an "on" to an "off" position.

FIG. **11**G provides a cross section view of the switch feature of FIG. **11**A. It is to be noted, that this configuration is such that as the design of an underlying device is changed over time, the switch feature **90** should be able to accommodate minor changes in the configuration of the underlying device and still be effective in performing its function.

Additionally, the top and/or bottom member may be configured so as to include a slot region to facilitate in separating the top member from the bottom member of the housing. For instance, a tool may be placed within the slot and twisted thereby causing the two members of the housing to separate, e.g., unzip. In this regard, the flexible material of the housing, e.g., the overmoulded exterior perimeter portion **20***b* of the top member **2** and the semi-rigid, e.g., polypropylene, material of the bottom member **3** may facilitate such an interaction because if the material of the housing were exclusively rigid such an interaction would be hard to achieve in addition to a consistent seal.

Accordingly, in certain embodiments, as depicted in FIG. **12**A an outer perimeter portion of the housing **1** may include a slot feature **18**, such as a coin slot feature, for assisting in separating the top member **2** of the housing from the bottom member **3** of the housing. The slot feature may include an indented, e.g., cut out, portion **17** of the perimeter. The cut out portion **17** may be positioned in top member **2**, and further be bounded by a plurality of bounding members **19** *a, b*, such as overhang (or non-cutout) portions in top housing **2** and bottom housing **3**, respectively.

FIG. **12**B provides a close up cross section view of the coin slot feature **18** of FIG. **12**B. The top member **2** includes both a concave configuration **17** and a convex overhang or non-cutout configuration **19***a*, while the bottom member **3** also includes a convex or non-cutout configuration **19***b*, such that as the top **2** and bottom **3** members are joined together a coin slot feature **18** is formed so as to assist a user in opening the opposing members of the housing **1**, such as by inserting a tool, such as a coin, into the concave region **17** and twisting thereby forcing the top member **2** away from the bottom member **3**.

FIG. **12**C provides a cross section view of the coin slot feature **18** of FIG. **12**A. The coin slot feature **18** is formed within the top member **2** and includes a concave region **17** and a convex region **19***a* that overhangs the concave, cutout region **17**. The corner portion of the bottom member **3** naturally forms the other bounding member **19***b* of the coin slot feature **18**.

FIG. **12**D provides a cross section view of the coin slot feature **18** of FIG. **12**A, which coin slot feature **18** includes a concave region **17** bounded by a plurality of convex regions **19***a* and **19***b*, wherein the convex region **19***a* is positioned on top member **2** and the convex region **19***b* is positioned in bottom member **3**.

In a further embodiment, as seen with respect to FIG. **13**A the outer perimeter portion of the housing **1** may include a sound transmission portion **60***c* that is configured as a noise cancelling feature. In this configuration, the noise cancelling feature **60***c* functions for assisting in directing ambient noise toward a noise cancelling microphone present on an encased device thereby facilitating in the cancelling of ambient noise. The noise cancelling feature **60***c* may be positioned anywhere on the housing **1**, on a top member **2** or bottom member **3**, such as along the perimeter **20** or **30**. As depicted, the noise cancelling feature **60** is positioned on a top member **2** and is offset from a liquid proof headphone jack outlet **50**, which headphone jack includes a port sealing bung **53**. For instance, it is to be noted that in various instances, a noise cancelling feature may be included within an earphone port **50**, more specifically, within earphone port closure **53**. For example, the port sealing bung **53** could include the noise cancelling feature **60**, such as where an underlying electronic device has a noise cancelling feature associated with its accessory, e.g., headphone, connection inlet.

FIG. **13**B provides a cross section view of the noise cancelling feature **60***c* of FIG. **13**A. The noise cancelling feature **60***c* includes an acoustic inlet aperture **61** that communicates with a sound guide channel **62**, which channel **62** directs sound toward an acoustic membrane **63** positioned in a transverse manner within the sound guide channel **62**. The acoustic inlet aperture **61** is offset from a noise cancelling microphone of an encased device, but configured for directing ambient noise thereto. Additionally, as can be seen with respect to the accessory inlet aperture **50**, e.g., headphone port, of FIG. **13**B, in various embodiments, the head phone port **50** may include a structural circumferential feature that is designed to contact and/or at least partially circumscribe an earphone inlet port **150** of a housed device **100** so as to protect the inlet port **150** of the device **100** form being subjected to dirt or liquid that might otherwise enter the housing **1**.

It is further to be noted that although in this embodiment the noise cancelling feature **60** is in an offset fashion, in certain embodiments it can be configured to be directly in-line with a noise cancelling feature of a housed device. For instance, where a noise cancelling feature of an underlying device is positioned within an accessory inlet portion, such as in a headphone jack receiving portion, then the noise cancelling feature **60** may be positioned within an earphone jack port **50** plug. In such an instance, the port sealing bung **53** would be configured to include the noise cancelling feature **60**, which in turn would include one or more of an acoustic inlet aperture **61**, e.g., positioned on closure top member **58**, which communicates with a sound guide channel **62**, posi-

tioned underneath thread portion **54**, which channel **62** would direct sound toward an acoustic membrane **63** positioned in a transverse manner within the sound guide channel **62**. In such an instance, the noise cancelling feature **60** would be directly in line with a noise cancelling feature of a housed device.

As depicted, the noise cancelling feature **60***c* includes one or more sound inlet apertures **61**, a sound guide channel **62**, and an acoustic vent membrane **63**, which are positioned on a perimeter portion **20** of a top member **2**. The sound guide channel **62** is configured for directing sound toward a noise cancelling microphone present on an encased electronic device. The acoustic vent membrane **63** may be positioned so as to intersect the sound guide channel **62**.

Further, in certain embodiments, as can be seen with respect to FIG. **13**C, the noise cancelling feature **60***c* may additionally include an echo cancelling gasket **64***b* that may be positioned on a gasket seat **64***a*, which gasket seat **64***b* and gasket **64***a* circumscribe the interior perimeter of the noise cancelling feature **60***c*.

For instance, in certain configurations, when a housed device, such as a mobile telephone, having a noise cancelling microphone is entirely enclosed within the bounds of a housing, sound emitted from the housed device may be reflected internally to the noise cancelling microphone thereby causing echoing. For example, where the enclosed device is a mobile telephone, sound emitted from the device from a person speaking on the other end of the line may sometimes hear an echoing of their words because of the internal reflection of the sound of their speaking. This reflection of noise makes communication through the enclosed device more difficult than it otherwise would be.

To prevent such echoing a gasket **64***b* may be placed on an internal perimeter portion **20***a* of the top member **2** in such a manner that it circumscribes the internal perimeter portion of the noise cancelling feature **60***c*. The gasket **64***b* may be composed of any suitable material, such as a compressible foam material, elastic material, rubber material, a mixture of the same, and/or the like, and should be positioned such that it surrounds the noise cancelling microphone feature inlet of the enclosed device thereby preventing internally reflected sound from entering the noise cancelling microphone inlet of the enclosed device and thereby causing echoing. With an appropriately positioned gasket **64***b* positioned around the noise cancelling microphone inlet of an enclosed device, this echoing is diminished if not completely prevented. For further effect, the noise cancelling gasket **64***b* may be positioned on a gasket seat **64***a* which gasket seat **64***a* functions to more firmly position the gasket **64***b* against the encased device. See FIG. **13**C.

Accordingly, FIG. **13**C provides an inside out view of the noise cancelling feature **60***c* of FIG. **13**A. Depicted is an acoustic vent membrane **63** that transects a sound guide channel **62**. The sound guide channel **62** is circumscribed by a echo cancelling gasket seat **64***a*, upon which gasket seat **64***a* is positioned an echo cancelling gasket **64***b*. The sound guide channel **62** is offset from an earphone jack port **50**, which earphone port is coupled with the port sealing bung **53**. Although the sound guide channel is offset from the earphone jack port **50**, it is configured for guiding sound to a noise cancelling microphone on the body of an encased electronic device, such as a mobile telephone.

As indicated, FIG. **13**C provides a noise cancelling feature with a noise cancelling gasket **64***a* present. As can be seen, the noise cancelling gasket **64***a* sits within gasket seat **64***b* and circumscribes the internal perimeter portion of the noise cancelling feature **60***c* thereby preventing the internal reflection of sound from entering a noise cancelling microphone inlet of an encased device thereby preventing the experience of echoing.

FIG. **13**D provides a cut away view of the noise cancelling feature **60***c* of FIG. **13**A. The noise cancelling feature **60***c* includes a sound inlet aperture **61**, a sound guide channel **62**, an acoustic vent membrane **63**, and a noise cancelling gasket **64***a* positioned on a gasket seat **64***b*. The acoustic vent is in an offset position so as to facilitate the transmission of sound there through. In the same manner described above, the acoustic membrane **63** may be associated with the housing **1** in an overmoulded configuration and/or an adhesive may be included to secure the membrane to the housing.

In an additional embodiment, as can be seen with respect to FIG. **14**A, the outer perimeter portion of the housing **1** may include a port feature aperture **50**, for instance, for receiving either a jack, such as a jack of an accessory, such as a headphone or speaker assembly, or a closure device, e.g., a bung, or the like. The headphone port feature may be included in a top and/or bottom member **2**, **3**. A noise cancelling feature inlet aperture **61**, as described above, is also depicted.

FIG. **14**B provides a cross section view of the headphone port feature **50** of FIG. **14**A. The headphone port feature **50** may include an aperture bounding member **51** positioned in one or both of the top and bottom members **2**, **3**. The aperture bounding member **51** bounds an aperture. The bounding member includes a threaded region **54***a* that is configured to correspond to a threaded region **54***b* on the port sealing bung **53**, which port sealing bung **53** is adapted to be inserted into the port feature aperture **50**. In various embodiments, the bounding member may also include a gasket seat and a gasket, such as an o-ring. However, as depicted, although aperture bounding member **51** includes a gasket seat **52**, the gasket seat is configured for interfacing with a gasket **55** positioned on the earphone port bung **53**.

The threaded region **54***a* may be configured for receiving a corresponding threaded region **54***b* present on an accessory, such as a headphone jack **57** or a closure device, such as an earphone port sealing bung **53**. Accordingly, a suitable headphone jack **57** or closure device such as port sealing bung **53** will include a corresponding thread feature **54***b* and may additionally include a gasket **55**. If the headphone jack **57** and/or port sealing bung **53** includes a gasket, then the aperture bounding member **51** need not include a gasket **52***b*, rather it will simply include a gasket seat **52** and a threaded feature **54***a*. If the headphone jack **57** and/or closure device does not include a gasket **55**, then the aperture bounding member **51** will include a gasket seat **52***a* as well as a gasket **52***b* and a threaded feature **54***a*. The threaded region **54***a* may be configured as a typical thread feature or may be configured as a cam feature. Hence, it is to be noted, that a gasket **52***b* may be present within the housing of the aperture bounding member **51** or may be present on the earphone port bung **53** or headphone jack **57**.

FIG. **14**C provides a cross-section view of the headphone port feature **50** of FIG. **14**A. The headphone port feature **50** includes an aperture **51** positioned in top member **2**. As can be seen with respect to FIG. **14**C, in certain instances, the headphone port feature **50** may be configured to be coincident with or otherwise include a clasping mechanism interface **27** for coupling with a clasping mechanism **37** of a bottom member **3**. However, in other embodiments, the port feature **50** includes an aperture **51** that is entirely positioned in a top **2** or bottom **3** member, wherein the port feature **50** is positioned above a respective clasping mechanism **27** or **37**.

For instance, the port feature **50** may be entirely positioned in a top member **2**, wherein the aperture spans from a semi-

rigid exterior perimeter portion **20***b*, through the rigid interior perimeter portion **20***a*, into the interior of the case. Therefore, the perimeter portion **20** of the top member **2** is configured to entirely accommodate the port feature **20**. In such an instance, although the port feature **50** spans the interior and exterior perimeter portions **20** *a, b* of the top member **2**, it does not interfere with the clasping mechanism **27** of the top member **2** that is positioned on either the interior or exterior perimeter portion **20** *a*, b. In such an instance, the perimeter portion of the bottom member **3** may include an arched cutout region so as to accommodate the port feature **50**, so long as the cutout does not interfere with the clasping mechanism **37**.

The aperture bounding member **51** may include both a gasket seat **52***a* and gasket **52***b* (e.g., if not included in a corresponding port bung **53** and/or jack **57**), and a threaded region **54***a*, which threaded region **54***a* is configured for receiving the corresponding threaded region **54***b* on port sealing bung **53** and/or corresponding threaded region **58** on an earphone or speaker jack **57**. In this configuration, the coupling of the earphone port sealing bung **53** or jack **57** with the headphone port feature **50** results in a liquid and dirt tight seal, which seal prevents a liquid, such as water, and/or dirt from entering the housing **1** through the headphone port **50**.

Additionally, as can be seen with respect to FIG. **14**D, in certain embodiments, the perimeter **20** of the top member **2** may include a stepped up configuration so as to allow the separate housing members **2** and **3** to more closely interface with one another, despite the presence of one or more features of the housing and/or an underlying device, such as headphone port feature **50**.

For instance, where the interior perimeter portion **20***a* of the top member **2** includes the clasping mechanism **27**, the interior perimeter portion **20***a* and clasping mechanism **27** may have a transition that moves from lower d**1**, along the sides of the housing, to higher d**2**, along the corners of the housing. This transition may be included along all the corners to ensure a tight seal, and/or may be included anywhere suitable so as to accommodate for the presence of a perimeter feature such as the headphone port feature **50**.

Accordingly, FIG. **14**D provides a view of a corner edge detail showing the transition of interior perimeter portion **20***a* and clasping member **27** from low to high, which transition accommodates for the presence of the headphone port **50** by providing the necessary clearance. It is to be noted that this transition may be included without reference to its relation to any other perimeter feature and may be included in a top or bottom member with consequent changes being made to its components.

As indicated above, an element of the housing **1** may be a port opening, such as a headphone port **50**, that is configured for acting as an interface between a headphone, speaker, or other jack containing accessory device **57** and a jack port **150** of an underlying electronic device **100** so as to provide a liquid-proof interface between the headphone **57**, speaker jack, etc. and the underlying device **100**. In such an instance, the interface is a liquid and dirt proof seal.

In certain instances, however, a headphone, speaker, or other device containing a waterproof jack interface **57** may not be included or may not otherwise be associated with the housing **1** or an underlying device **100** associated therewith. In such an instance, a port sealing bung **53** may be associated with the port **50** of the housing **1** so as to maintain a liquid and dirt proof seal when a liquid-proof jack **57**, such as the one described herein below, is not associated with the port of the housing.

Accordingly, as can be seen with respect to FIG. **15**A, in certain instances, a port sealing bung **53** is provided for sealing an associated port **50** of a housing **1**. The port sealing bung **53** may include a top member **58**, which top-member may further include a grip feature region **56**. The port sealing bung **53** may also include a gasket region containing a gasket **55** and a threaded region containing threads **54***b*, which threads are configured for coupling with corresponding threads **54***a* of a jack port **50** so as to establish a liquid and dirt tight seal there between. It is to be noted that the threaded regions may be configured as a thread feature or a cam feature.

As can be seen with respect to FIG. **15**B instead of the threaded region depicted in FIG. **15**A, a cam feature, such as a bayonet cam feature **54***c* can be provided. The cam feature **54***c* is configured for coupling the jack port sealing bung **53** with the jack port **50** in a liquid-tight seal when the port **50** is not associated with a corresponding liquid-proof jack interface **57**. The port sealing bung **53** also includes a top member **58** having a grip feature **56** and gasket **55**.

FIG. **15**C provides a bottom-up perspective view of the port sealing bung **53** of FIG. **15**B. The port sealing bung **53** includes a top member **58** with grip features **56**. The port sealing bung **53** includes a gasket region with gasket **55** and a bayonet cam feature, which in this instance is an indented region **54***c*. It is to be noted that when the cam feature **54***c* is included in the port sealing bung **53**, a corresponding protruding cam feature is substituted for the threaded region **54***a* of the port jack **50**.

FIG. **15**D provides a bottom-up view of another embodiment of the jack port bung of FIG. **15**B. The port sealing bung **53** includes a top member **58** with grip features **56**. The port sealing bung **53** includes a gasket region with gasket **55** and a bayonet cam feature this time with an expanded region **54***c*. It is to be noted that when this expanded cam feature is included in the port sealing bung **53**, a corresponding indented cam receiving feature is substituted for the threaded region **54***a* of the port jack **50**. See FIG. **15**E.

FIG. **15**E provides a jack port **50** of a housing **1**, wherein the jack port **50** has a bayonet thread receiving feature **54***a* that is configured for being coupled with a corresponding bayonet thread protruding feature **54***c* of a closure device **53** or cam protruding feature **58** of a waterproof jack **57**. In this instance, the corresponding locking features are configured as a bayonet cam features, but they could alternatively be configured as corresponding threaded regions. The bayonet cam feature **54***c* or **58** is configured to act as an entry gate between the bung **53** or jack **57** and the jack port **50**. The jack port **50** also includes a gasket sealing surface that is configured for interacting with a gasket feature **55** of the bung **53** or gasket feature **59** on jack **57** for assisting in providing a liquid-tight seal between the bung **53** or jack **57** and the jack port **50**.

FIG. **15**F provides a view of a housing **1** of the disclosure with an earphone port sealing bung **53** not installed therein.

FIG. **15**G provides a view of a housing **1** of the disclosure with an earphone port sealing bung **53** installed therein.

As indicated above, an element of the housing may be a port that is configured for acting as an interface between a headphone, speaker, or other jack containing accessory device and a jack port of an underlying electronic device. Accordingly, in certain instances, a headphone, speaker, or other accessory device having a jack interface may be included and associated with the housing and/or an underlying device associated therewith in such a manner that a liquid-proof seal is formed by the coupling of the jack with the jack port of an underlying device through the housing's jack port interface. Hence, in certain embodiments, a device, such as a headphone, speaker, or other such accessory device having a jack interface is provided, wherein the jack interface of the

device is configured so as to provide a liquid-proof seal between the jack and the jack port interface of the housing, which interface is adapted for receiving the headphone, speaker jack, etc., in such a manner so as to produce a liquid-proof seal thereby.

Accordingly, as illustrated in FIG. **16**A, a device having a plug, e.g., a jack interface **57**, is provided. The jack is configured for providing a liquid-tight seal between the jack interface **57** and a jack-port receiving feature **50** of the housing **1**. The jack may include a gasket **59**, such as an o-ring, and a threaded or cam feature **58**. It is to be noted that where the jack interface **57** includes a threaded or cam feature **58**, a corresponding threaded or cam feature **54***a* will be included in the jack port feature **50** of the housing **1**. The jack plug comprises an electronic device interface.

The jack electronic device interface or bung **57** is configured for passing through the jack port **50** so as to associate with an encased electronic device, and also to associate with the jack port feature **50** of the housing **1** in such a manner as to establish a liquid-tight seal there with. In this instance, the jack **57** includes a thread feature **58** configured as a thread feature locking mechanism **58**, however, in other embodiments, the thread feature is configured as a bayonet cam locking mechanism.

With respect to FIG. **16**A, provided is a perspective view of an electronix interface of an accessory having a jack interface **57**, e.g., a plug. The jack interface **57** is configured for providing a liquid-tight seal between the jack **57** and a jack-port **50** receiving feature of a housing **1**. The jack **57** includes a gasket seat for a gasket **59** and a threaded feature **58**. The jack **57** further includes an electronic device interface. The jack **57** is configured for passing the electronic device interface through the jack port **50** so as to associate with an encased electronic device and also to associate with a jack port feature **50** of the housing **1** in such a manner as to establish a liquid-tight seal there with. In this instance, the jack **57** includes a threaded feature locking mechanism **58**, which is configured for interfacing with a corresponding threaded region **54***a* of the jack port **50**.

FIG. **16**B provides a view of a threaded jack port. **16** into which a threaded bung **53** or threaded jack interface **57** could be associated, In this instance a port sealing bung **53**, as described above, is installed therein. In this embodiment, the jack port **50** and the bung **53** have corresponding thread feature locking mechanisms **54***a* and *b*, respectively. The port sealing bung **53** additionally includes a gasket **55** which enhances the liquid-tight seal. It is noted, that in order for the jack electronic device interface **57** of the jack of FIG. **16**A to be inserted into the jack port **50** of the housing **1** of FIG. **16**B, the port sealing bung **53** must be unscrewed from the jack port **50** and the jack **57** must be screwed therein.

FIG. **16**C a bayonet jack electronic device having a jack interface **57** is provided. The jack includes a gasket **59**, e.g., an o-ring, and a cam feature **58**. It is to be noted that where the jack interface **57** includes a cam feature **58**, a corresponding cam feature **54***a* will be included in the jack port feature **50** of the housing **1**. Accordingly, as illustrated in FIG. **16**C, the jack interface **57** is configured for passing through the jack port **50** so as to associate with an encased electronic device, and also includes a cam feature **58** that is adapted for associating with a corresponding cam feature **54***a* of the jack port feature **50** of the housing **1** so as to establish a liquid-tight seal there with. See FIG. **16**D.

FIG. **16**D provides a close-up view of a cammed jack-port **50** of a housing **1**. The jack-port **50** includes a cammed feature **54***a*. The jack-port **50** is adapted to receive either a port bung **53** or a jack interface with corresponding threaded feature **54***b* or **58**. When the port bung **53** or jack interface **57** is received within the jack-port **50**, a liquid tight seal is provided thereby. This liquid tight seal is enhanced by including a gasket (e.g., **55** or **59**) along with the bung **53** or jack interface **57**

FIG. **16**E provides an interior view of the bayonet cam jack port **50** of FIG. **16**B with the port sealing bung **53** installed.

FIG. **16**F provides a cross section interior view of the bayonet cam jack port **50** of FIG. **16**E the port sealing bung **53** installed.

FIG. **17**A provides a view of a liquid-proof adapter and cable for use in conjunction with a housing of the invention. The adapter includes a receiving or female member **88** that is configured for receiving a typical electronic device jack interface, e.g., plug, such as a headphone, speaker jack, other accessory, and/or the like to be inserted therein. The adapter further includes a liquid-proof jack **57** or male portion, e.g., plug, for being coupled to a liquid-proof jack port **50** of a housing **1** of the disclosure, so as to provide a liquid-proof sealing between the jack **57** and the port **50**.

In this manner, a typical electronic device jack may be associated with the liquid proof adapter and employed with a housing **1** of the disclosure in a liquid-tight sealing. The liquid proof jack **57** portion of the adapter and cable includes a jack gasket **59** and a threaded jack interface **58**.

The adapter may further include a storage port **87** which may be adapted for receiving one or both of the liquid proof jack **57** and/or a port sealing bung **53**. The storage port **87** may also include a plurality of covers **89** *a* and b. It is to be noted that although the above description has been set forth with respect to the adapter being liquid-proof, in various embodiments the adapter need not be liquid-proof. For instance, the gasket, e.g., O-ring, **59** and/or locking mechanism, e.g., threads, **58** need not be present. In such an instance, the adapter may be a non-waterproof adapter.

FIG. **17**B provides other instances of the liquid-proof adapter of FIG. **17**A. The adapter includes an earphone jack receiving member **88**, which is configured for receiving a standard electronic device jack plug interface. The adapter also includes a liquid proof jack **57**. The adapter further includes a storage port **87** that may be configured for receiving one or both of a portion of the liquid proof jack **57** and/or a port sealing bung **53**, such as in a port bung storage receiving element **87**. As can be seen with respect to FIG. **17**B, in a first instance, the storage element **88** is closed, having a bung **53** stored therein. In a second instance, the storage element **88** is open, the bung **53** having been removed therefrom. In a third instance, the storage element is closed, having receiving therein the jack plug **57**. Accordingly, the adapter is adapted for being bent about itself, so that the waterproof jack **57** may be inserted into the storage element **87** (for better storage capabilities); and/or the adapter is adapted for being coupled to a liquid-proof port **50** of the housing **1** via the liquid proof jack **57**.

Consequently, the liquid proof jack **57** includes an earphone jack gasket, e.g., O-ring, **59** as well as a locking mechanism, such as threads **58**. In a manner such as this an accessory may be inserted into the female portion **88** of the adapter and the male end **57** of the adapter inserted into the case, associated with a jack inlet port of a housed device, and locked into place via locking element **58**. Hence, an accessory plug that would otherwise not be able to be inserted into the housing, such as in a waterproof manner, can via the adapter be electronically connected with an underlying device. This in turn allows for a jack-port interface having the smallest possible profile.

FIG. **17**C provides a view of various different locking members for locking a jack **57** in combination with a housing

1 of the disclosure. For instance, one or more locking tethers **69** *a* and/or *b* may be associated with a jack **57**. The one or more locking tethers **69** *a* and/or *b* may be configured for being coupled with one or more corresponding locking elements **69** *c* and/or *d* on the housing, such as by snapping, see FIG. **17**C **1**, **2**, **3**, **4** or **5**; or by inserting and twisting. See FIGS. **17**C **5**, **6**, and/or **7**. For example, the locking tether may be a part of the jack **57**, see numbers **1** and **2**, which slides onto a corresponding receiving member on the housing, or it may be a locking tether on the housing that slides into a corresponding groove on the jack **57**, see #**3** and **4**. In certain instances, one or more of the locking tethers may include a locking screw thread and/or gasket, etc. See #**5**. In other instances, the jack **57** may include one or more wings **69***a* and *b*, which wings are configured for being coupled with one or more wing receiving members **69***c* and *d*, such as by inserting the jack wings **69** *a* and *b* into the wing receiving members **69** *c* and *d* and twisting so as to lock in place. See, for instance, FIG. **17**C, reference numbers **6**, **7**, and **8**.

FIG. **17**D provides various methods for securing a port sealing bung **53** when it is not secured within the housing **1**. For instance, the port sealing bung **53** may be tethered to the housing **1** by a leash **69**. The port sealing bung **53** may also be placed into a bung holding receptacle **14** that is built into the housing **1**. Alternatively, the port sealing bung **53** may be stored into a bung holding receptacle **87***a* that is part of an adapter.

As depicted, in one embodiment the bung holding receptacle **87***a* may also include a plug receiving receptacle **87***b* as well, into which a plug, e.g. **57** may be inserted, e.g., for storage. For instance, in certain embodiments, the liquid-proof adapter member includes an earphone jack adapter receiving member **88**, which is configured for receiving a standard electronic device jack interface **57**. For example, on one end, the adapter includes a liquid proof jack **57**, which is configured for being coupled to a liquid-proof port **50** of the housing **1**, such as in a liquid-proof seal. The other end of the adapter member includes a storage receptacle that includes both a port **87***a* that is configured for receiving a liquid proof port sealing bung **53**, and a port **87***b* that is configured for receiving the jack port interface, e.g., of the adapter. As depicted, the port sealing bung **53** is coupled to the port bung receiving member **87***a* and the jack interface **57** is coupled to the jack port receiving member **87***b*.

FIG. **17**E provides a perspective view of another embodiment of a liquid-proof adapter member having a port bung storage element **96** associated therewith. The adapter includes a jack receiving member **88**, such as a female plug receiving member, a storage device **96** having a port bung storage element, adapted for receiving and storing a port sealing bung **53** when not in use, and a liquid-tight jack **57**. The jack **57** is an earphone jack that is configured so as to form a water tight seal between the earphone jack **57** and the earphone jack port **50**. Accordingly, the water-tight jack **57** includes a jack gasket **59**, such as an O-ring, which is positioned on a gasket stand of the jack **57**. Also included is a threaded region, such as a jack threaded region **58** that is configured for being coupled to a corresponding threaded region **52** of the jack port **50** of the housing **1**. It is to be noted that as depicted the jack port **50** is configured so as to have a gasket **59** and a threaded region **58** positioned thereon, in certain instances, the jack port **50** may be configured for housing the gasket, e.g., **55**, and instead of a threaded region the jack and jack port may be configured with corresponding cam features.

FIG. **17**F provides a close up perspective view of the water-proof adapter member with port bung storage element **96** of FIG. **17**E. The adapter includes an earphone a port bung storage element **96**, having a port bung receiving member **87**, and a liquid-tight earphone jack **57**. The liquid-tight jack **57** includes a jack gasket **59**, which is positioned on a gasket stand of the jack. The water-tight jack **57** also includes a jack threaded region **58** that is configured for being coupled to a corresponding threaded region **54***a* of the jack port **50**.

FIG. **17**G provides a close up perspective view of the water-proof adapter member with port bung storage element **96** of FIG. **17**E, wherein the bung storage element **96** is uncoupled from its association with the adapter member. The adapter includes an earphone jack adapter **88** (not shown), a port bung storage element **96** having a receiving portion **87** for receiving and storing a port sealing bung **53**, and a liquid-tight earphone jack **57**. The port bung storage element **96** includes a receiving member **87** that is configured for receiving a port sealing bung **53**. The storage device **96** is further configured for being associated with the adapter, e.g., through a coupling interface, such as via a clasping member. As depicted the port bung storage element **96** is uncoupled from the adapter and the port sealing bung **53** is dissociated from the bung holder **87** of storage element **96**. The water-tight jack **57** includes a jack gasket **59**, which is positioned on a gasket stand of the jack **57**. The water-tight jack **57** also includes a jack threaded region **58** that is configured for being coupled to a corresponding threaded region **44***a* of the jack port **50**.

FIG. **17**H provides a perspective view of the bung storage element **96** as it is attached to a non waterproof adapter. The bung storage element **96** includes a bung receiving member **87**, which includes a clasping member that is configured for being coupled to a cable of an auxiliary device, such as a headphone or speaker device, and further includes a storage element **96** for storing a port sealing bung **53**. The earphone jack interface in this embodiment is not a waterproof interface.

FIG. **17**I depicts a waterproof jack port adapter of the disclosure as it would be when the jack port interface member **57** is coupled to a corresponding jack port **50** of the housing **1**. In this embodiment, the adapter is a liquid proof adapter that includes a liquid proof jack **57**, which jack is coupled to a liquid-proof port **50** of the housing **1** in a liquid-proof seal. As described above, the jack **57** includes both a locking element **58** as well as a gasket **59** (not shown), both of which enhance the waterproof seal between the jack **57** and the port **50**. The adapter cable further includes a storage device **96** that includes a port **87** that is configured for receiving a liquid proof port sealing bung **53**, wherein the port sealing bung **53** is coupled to the port bung receiving member **87**. Also depicted is the plug receiving member **88** of the adapter. In this embodiment, an accessory, such as a pair of waterproof headphones, could be coupled to the external adapter member so as to be electrically connected with a housed device in a waterproof connection. The adapter could also be used for accessories having plug members that would not otherwise be able to fit through the bounds of the port **50** or where an extension is desirable.

In certain instances, such as that provided in FIG. **18**A, a storage element **96** is provided wherein the storage element is configured as a key chain. The storage element **96** includes a key chain interface **98** that is configured for being coupled at least to a key chain and further includes a plurality of storage elements, for instance, one storage element **87***a* for storing a port sealing bung **53**, and another storage element **87***b* for storing a latch cover **71**, such as where the latch cover is designed to be removable. In certain embodiments, the key chain storage device **96** may further include a tool **97** for separating the corresponding members of the housing one

from the other. For instance, a tool **97** may be provided wherein the tool is configured for being inserted between the members of the housing **2** and **3**, such as at a slot region **18** positioned along a perimeter of the housing **1**. Inserting the tool **97** into the slot feature **18** and twisting will effectuate the separating of the top member **2** from the bottom member **3**.

FIG. **18**B provides a side-view of the key chain storage element **96** of FIG. **18**A. The storage element **96** includes a key chain interface **98** and further includes a storage element **87***a* for storing a port sealing bung **53**, and another storage element **87***b* for storing a latch cover **71**. The key chain storage device **96** further includes a tool **97** for separating the corresponding members of the housing one from the other. As depicted, the key chain storage device is further configured for opening and closing, and in this embodiment, the key chain storage device is in the opened position.

FIG. **18**C illustrates the key chain storage device **96** of FIG. **18**B, wherein the key chain storage device **96** is in the closed position. The key chain storage device **96** includes a key chain interface **98**, a storage element **87***a* for storing a port sealing bung **53**, another storage element **87***b* for storing a latch cover **71**, and a tool **97** for separating the corresponding members of the housing one from the other.

FIG. **18**D is a further representation of the key chain storage device **96** of FIG. **18**C.

FIGS. **19**A-K provide another embodiment of a device of the disclosure. Accordingly, FIGS. **19**A-C provide a segmental illustration wherein various elements of a housing **1** are provided in a segmented fashion. In accordance with this embodiment, the housing **1** may include a top housing member **2** and a bottom member **3**. Additionally, in this embodiment, the housing further includes an intermediate structural member **4**. The top member **2** includes a top-surface **25***a*, which in this embodiment is configured as a membrane that is attachable to top member **2**. The membrane **25***a* includes an acoustic membrane feature **44**, video camera optically clear region **47**, a proximity sensor **48**, and a button feature **40**. The top member **2** further includes an outer perimeter portion that includes a jack port **50***a*, several cutout regions configured for receiving various feature elements as described above, and an interface region so as to interface with the intermediate member **4**.

The intermediate member **4** is configured for interfacing with both the top member **2** and the bottom member **3**. The intermediate member **4** includes a jack port **50***b*, a slider switch receiving aperture, and a camera portion **80**. A slider switch **90** is also provided and configured for being fit within the slider switch receiving aperture of the intermediate **4** and top member **2**. The bottom member **3** is configured for interfacing with the intermediate member **4** and/or the top member **2**. The bottom member **3** includes a slider switch interface region for interfacing with the slider switch **90**.

The top member **2**, intermediate member **4**, and bottom member **3** are configured for being coupled to one another so as to form the housing **1**. In this embodiment, each of the top **2**, intermediate **4**, and bottom **3** members are configured such that when they are coupled together an opening is formed at the proximal end of the housing **1**. Any of the top, intermediate, and bottom members **2**, **3** or **4** may be configured to be separable one from the other, or they may be fabricated such that once joined they are not further capable of being disjoined without destroying the housing or its ability to provide a liquid tight seal.

However, as the one or more components, e.g., **2**, **3**, and **4**, come together to form the housing **1**, the proximal end of the housing **1** includes an opening, such as an opening through which an electronic device, such as a mobile telephone or other like device, can be received. The proximal end of the housing **1**, therefore, is further configured for being coupled to a removable proximal end portion **5**, so as to seal the housing in a liquid and dirt tight seal.

It is to be noted that although the housing **1** is herein described as including three component parts, i.e., a top **2**, intermediate **4**, and a bottom **3** member, in various embodiments, one or more of these component parts may be excluded and/or their functions be performed by one or more of the other component parts. For instance, in certain embodiments, the housing **1** may simply include a top member **2** and a bottom member **3**, e.g., in a configuration as that described above with the addition of a removable proximal end portion **5**, as described herein below.

In other embodiments, the housing **1** includes a single member, i.e., the top and bottom members are not removable from one another, e.g., they may be fabricated from a single material, and further configured for being removably coupled to a removable proximal end portion **5**, as described herein below. In any of these instances, the functional features as described herein above, button features, slider switch, port, coin slot, etc., can be included into any form of the housing, whether the housing is formed from a single or multiple members.

The proximal end portion **5** may have any suitable configuration so long as it is capable of removably coupling to the housing **1** and providing a liquid, dirt, and/or shockproof seal therewith. For instance, the proximal portion of the housing **1** and the proximal end portion **5** may have corresponding clasping mechanisms, as described above with respect to the perimeter portions of the housings **2** and **3**. Accordingly, either of the proximal portion of the housing **1** and the proximal end portion **5** may have interior and exterior perimeter portions, bounding portions, channels, and corresponding clasping mechanism, as described above. Further, it is noted that although the configuration herein detailed is with respect to a proximal portion, this configuration can be changed such as to be a distal end portion or a side portion, with respective changes to the various components of the housing in adaptation for the change in configuration.

As depicted with respect to FIG. **19**A, proximal end member **5** is configured for being coupled to several different elements. For instance, proximal end member **5** is configured for being coupled to a sound transmission portion **60** as well as latch door system **70**. The sound transmission system **60** includes acoustic vents **65** *a* and b. These elements are capable of being coupled together via latches **69** that slide into corresponding grooves thereby joining the sound transmission portion **60** into the proximal end portion **5**. The latch door assembly includes a rigid stiffener **72**, gasket **78**, as well as latch door **71***b*. These may be snapped into a corresponding latch door orifice **71***a* positioned in proximal end **5**. In a manner such as this, once the housing assembly **1** is assembled and the proximal end portion **5** is assembled, an electronic device **100** may then be inserted into the housing **1**, the end portion **5** coupled therewith, and the housing sealed in a liquid proof seal. See for instance, FIGS. **19**C-F.

FIG. **19**B provides another exploded, segmental illustration of the device of FIG. **19**A. The housing **1** of the disclosure may include a top housing member **2**, an intermediate member **4**, and a bottom member **3**. The top member **2** includes a top-surface membrane **25**. The membrane **25** includes an acoustic membrane feature **44** and a button feature **40**. The top member **2** further includes an outer perimeter portion **20** having both a jack port **50** and a slider switch aperture.

The intermediate member **4** is configured for interfacing with both the top member **2** and the bottom member **3**. The

intermediate member **4** includes a jack port **50***b*, a slider switch receiving aperture, and a camera portion **80**. A slider switch **90** and volume toggles **99** are also provided and configured for being fit within the slider switch receiving aperture of the intermediate **4** and top member **2**. The bottom member **3** is configured for interfacing with the intermediate member **4** and/or the top member **2** and further includes a camera feature **80** with lens **84**, etc. The bottom member **3** includes a slider switch interface region for interfacing with the slider switch **90** as well as a port opening **50***c*.

The top member **2**, intermediate member **4**, and bottom member **3** are configured for being coupled to one another so as to form the housing **1**. Each of the top **2**, intermediate **4**, and bottom **3** members are configured such that when they are coupled together an opening is formed at the proximal end of the housing **1**. This opening is configured for being coupled to a proximal end member **5** in such a manner that a liquid, dirt, and/or shock-proof seal is formed thereby.

The housing **1** couples with the proximal end portion **5** in a liquid-tight seal. The end portion **5** may be configured so as to include one or more features, such as a sound transmission portion **60**, including both a structural framework **67**, having acoustic channels **66** *a* and *b* and acoustic vents **65**, as well as a latch feature **70**. The acoustic membrane feature includes a sturdy framework **67** having sound channels **66** *a* and *b* included therein. The sound channels form a microphone acoustic vent portion **66***a* having a microphone acoustic vent membrane **65***a* therein, and further includes a speaker acoustic vent portion **66***b* forming a speaker acoustic channel and having a speaker acoustic vent membrane **65***b*. The latch feature **70** includes a latch cover **71***a*, which latch cover **71***a* includes a gasket **73**. Further, the end portion **5** may include a pair of latches for securing the acoustic membrane feature to the end portion **5**. The housing **1** and/or end member **5** also includes a bottom sealing member, e.g., gasket **15**, for interfacing with the top **2**, intermediate **4**, and/or bottom member **3**.

Accordingly, with respect to FIGS. **19**A and **19**B, the housing members are adapted to be coupled together and therefore include a top member **2**, bottom member **3**, optionally an intermediate member **4** and/or a proximal end portion **5**. As depicted the end portion **5** is configured for interfacing with a plurality of features, such as one or more sound transmission features, e.g., acoustic membrane features **65** *a* and b, and a latch feature **70**. The sound transmission feature is configured as an acoustic membrane feature, which includes a plurality of acoustic membranes, such as a microphone acoustic membrane **65***a* and a speaker acoustic membrane **65***b*. The latch feature **70** includes a latch cover **71***b*, which latch cover **71***b* includes a gasket **73** and is further configured for interfacing with a rigid stiffener region **72** that may be positioned within the proximal end portion **5** or the proximal portion of the housing **1**.

Further, as depicted, the acoustic channel feature **60** may include one or more, e.g., a pair of latches for securing the acoustic channel feature **60** to the end portion **5** and/or a gasket for enhancing the sealing thereof. The housing **1** is configured for receiving the proximal end portion **5** and therefore the housing **1** and the end portion **5** will have corresponding clasping mechanisms and may further include a gasket, e.g., an o-ring, to enhance the sealing of the housing **1** with the end portion **5**. Also depicted is a liquid-proof adapter member, as described above, which adapter member is coupled to the housing **1** via the port **50**. As the latch member **70***b*, in this instance, may be removable, a separate storage element (as described above) may also be included.

FIG. **19**C provides an example of a method of assembling a housing of the disclosure. For instance, a housing **1** may be fabricated as a single framework portion or a multiplicity of framework portions that are assembled together so as to make a single composite framework portion, as described above. Added to this framework portion is attached a top surface membrane **25**. Of course, the housing **1** can be configured as having two members, e.g., a top and bottom member, or more than two members, e.g., a top, intermediate, and bottom member, as described above. Further, the housing **1** is configured for being coupled to an end portion, e.g., a proximal or distal end portion **5**. Of course, the housing **1** could be, in an alternative embodiment, configured for coupling to a side member in like manner. With respect to FIG. **19** C, the housing **1** is adapted to form a liquid tight seal by coupling to end portion **5**.

Thus, the housing **1** and the end portion **5** may be fabricated so as to be independent pieces capable of being coupled together, as described above. For instance, the housing **1** and end portion **5** may have corresponding clasping mechanisms, as described above. A channel and/or gasket may also be included at this interface to ensure the coupling of the housing **1** and the end portion **5** form a liquid-tight seal upon coupling. For instance, the end portion could be configured as a plug portion, having a groove, or channel, or other form of gasket seat to which a gasket may be attached. As the end portion **5** is slid into the housing **1**, the gasket is compressed thereby providing a liquid proof seal therewith. Accordingly, the clasping mechanisms, channel, and/or gasket may entirely or partially circumscribe the perimeter portions of the opening of the housing **1** and/or the end portion **5**, e.g., at a housing interfacing portion of the end portion **5**.

As stated above, the housing **1** may be fabricated to have two separate halves, e.g., a top member **2** and a bottom member **3**, which halves are configured for being coupled together so as to form the housing **1** with an opening in one of its ends so as to be coupled with end member **5**. Likewise a top member **25** may be fabricated from a suitable membrane member independently and then attached to the completed housing **1**, or may be fabricated at the same time as the housing **1**, such as in an overmould process.

Accordingly, the membrane **25** may be associated with the housing through any suitable method such as by bonding, such as by an adhesive and/or in an over-moulded fashion such as described above. The membrane **25** may further include one or more additional elements associated therewith, such as a touch membrane that may be bonded to the top membrane, such as during an in-mould process, via an adhesive, or by over-moulding. The bottom member **3** of the housing may further be associated with a film, such as a PET film upon which a graphic decal may be positioned. In certain instances, the film may be a scratch resistant film.

FIG. **19**D provides a perspective view of a housing **1** of the disclosure with associated end portion **5** and membrane **25**. All of the various functional feature elements described above may be added to the housing **1**, end portion **5**, and/or membrane **25** in the manner described above. In this embodiment, the housing **1** is assembled, end portion **5** is coupled to the housing **1** and is in the closed position.

FIG. **19**E provides a perspective view of a bottom of the housing **1** of FIG. **19**D. The bottom surface of the housing **1** includes a transparent membrane **35**. This membrane may be attached to the housing in the manner described above with respect to the top surface membrane **25**. The housing **1** further includes an end portion **5** both of which have been coupled to an electronic device **100** that is housed within the housing **1**. The end portion **5** is associated with the main body of the

housing **1** and is therefore in the closed position so as to form a liquid, dirt, and shock-proof seal thereby. The housing **1** therefore houses the electronic device **100** and provides protection to the device against inclement weather, contact with liquids such as water, and/or damage due to shock, such as by dropping.

In this embodiment, the housing is not much wider, longer, or thicker than the underlying device to be housed therein. For instance, the housing may have a thickness of about 4.5 or about 3.5 mm or less, such as about 3 or about 2.5 mm, for instance, about 2 mm or about 1.5 mm, including about 1 mm or about 0.9 mm or less, for example about 0.75 mm to about 0.5 mm; dependent upon which materials the housing is made of. It is also to be noted that the when the device is housed within the housing the width dimension of the housing as compared to the device, as shown in FIG. **19**E, may be about 0.5 mm or about 0.75 mm to about 3.5 mm or about 4 mm wider than the device, such as about 1 mm or about 1.5 mm to about 3 mm or about 2.5 mm wider, such as about 2 mm wider than the device.

Further, when the device is housed within the housing, the length dimension of the housing as compared to the device, as shown in FIG. **19**E, may be about 1 mm or about 2 mm to about 20 mm or about 15 mm longer than the device, such as about 3 mm or about 4 mm to about 12 mm or about 10 mm longer, such as about 7.5 mm or about 5 mm longer than the housed device, dependent upon from what materials the housing is made and what perimeter features are to be include. For instance, where no perimeter features to be included, the housing could be less than about 1 mm, such as less than about 0.9 mm, including less than about 0.75 or 0.5 mm longer, wider, and thicker than the housed device.

FIG. **19**F provides a perspective view of a bottom of the housing **1** of FIG. **19**E. The bottom surface of the housing **1** includes a transparent membrane **35**. As can be seen, the front surface of the housing **25** also includes a transparent membrane **25**. The housing **1** further includes an end portion **5** both of which are coupled to the electronic device. The housing **1** coupled to member **5** houses the device. As depicted the housing **1** and end portion **5** are uncoupled from one another and therefore are in the open position.

FIG. **19**G provides a perspective view of a top of the housing **1** of FIG. **19**E. The top surface of the housing **1** includes a membrane **25** having a button feature **40** associated therewith as well as the other features described herein above. As can be seen, the button feature **40** aligns with the button feature of the underlying device so as to allow the manipulation of the navigation button. The housing **1** is depicted as coupled to the end member **5** and therefore is in the closed position, housing an electronic device. The housing **1** is further positioned next to an exemplary electronic device so as to provide a perspective as to the length, width, and thickness of the housing **1** relative to the device **1**.

FIG. **19**H provides a perspective view of a top of the housing **1** of FIG. **19**G. The top surface of the housing **1** includes a transparent membrane **25** having a button feature **40** associated therewith as well as other membrane features described herein above. The housing **1** further includes an end portion **5** coupled to the electronic device. The housing **1** houses the device. As depicted the housing **1** and end portion **5** are uncoupled from one another and therefore are in the open position. It is to be noted, the end portion **5** has additional latching mechanisms positioned on opposing sides for further latching the end portion **5** with the housing **1** and ensuring a tight seal thereby. The housing **1** further include latch receiving members for receiving and securing the latching mechanisms of end portion **5**. It is to be understood that this configuration could be reversed.

FIG. **19**I provides a close up view of a top end portion of the housing **1** of FIG. **19**H. As can be seen the housing **1** includes a transparent bottom membrane portion **35** as well as a camera aperture **80** and a port **50** with port bung **53** associated therewith.

FIG. **19**J provides a perspective view from a top end portion of the housing **1** of FIG. **19**I. As can be seen the housing **1** includes a transparent bottom membrane portion **35** as well as a camera aperture **80** and a port **50** with port sealing bung **53** associated therewith.

FIG. **19**K provides a housing **1***a-d* with various decals positioned at various locations thereon. For instance, a top member **2** front membrane **25** may be adapted so as to include an optically masked region, which may be in the form or may additionally include a graphical feature, such as a decal. Hence, one or more decals may be added to the housing after fabrication, e.g., by an adhesive coating layer, or other attachment mechanism, or can be added during the fabrication process.

With respect to FIG. **19**L it is to be noted that in various instances the top member may include an adhesive layer such that the top member comprises a layer that may be applied directly to the perimeter of a top member of the housing as well as to the top surface of an electronic device and be wrapped there around and thereby provide a liquid-proof seal for the case.

FIGS. **20**A-C provide additional aspects of housings of the disclosure. As can be seen with respect to FIGS. **20**A and **20**B, a housing of the disclosure may be configured to house virtually anything capable of being housed and transported. FIG. **20**A provides a housing **1** that is in the form of a case, such as a brief case, suitcase, messenger case, and the like. FIG. **20**B provides a housing **1** that is in the form of a storage container, cooler, warmer, or the like. The storage container **20**B can be configured to store anything in need of being protected from the environment, such as food, liquids, ice, paper, notebooks, books, household items, work items, office supplies, medical items, sports items, clothing, fragile items, precious items, and the like. The housings of FIGS. **20**A and **20**B each include a top member **2** and bottom member **3**, which top and bottom members include respective clasping mechanisms **27** and **37**, as described above. A channel **10** and gasket **15** are also provided, in this instance, in the bottom member, although they could as well be positioned in the top member **2**. The top member **2** of FIG. **20**A is connected to the bottom member **3** via a hinge element **11**. In such an embodiment, the clasping mechanisms, channel, and/or gasket, may not need to entirely circumscribe the perimeters of the top and bottom members, however, in various embodiments, one or more of the clasping mechanisms, channel, and gasket do circumscribe the entire perimeter portions, e.g., of the respective top and/or bottom members **2**, **3**. As can be seen with respect to FIG. **20**B the top member **2** is configured for being completely removed from the bottom member **3**. In this instance, the clasping mechanisms **27** and **37** circumscribe the entire perimeter portions of the top and bottom members **2**, **3**, and the channel **10** and gasket **15** entirely circumscribes the perimeter portion of the bottom member **3**.

As can be seen with respect to FIG. **20**C an additional latching mechanism may be included to either of the housings of FIG. **20**A or B for further securing of the sealing of the top and bottom members **2**, **3**. This latching mechanism may be in any configuration so long as it is capable of facilitating the coupling and/or securing of the top member **2** with the bottom

member **3**. For instance, the latching mechanism may be one commonly known in the art. In certain embodiments it may include a locking mechanism known in the art, such as a lock and key mechanism, a combination mechanism, a hoop mechanism through witch an external lock is added, and the like.

In one aspect, a method of manufacturing a housing **1** as described herein is provided. The method includes individually producing a bottom member and a top member in such a manner that they are capable of being coupled together so as to produce a waterproof and dirtproof housing. As indicated above, the housing **1** includes several component parts. Primarily, in various embodiments, a housing **1** of the disclosure includes a top member **2** and a bottom member **3**. However, to be more precise, the top member **2** is more particularly a perimeter portion **20** having a latching mechanism **27** configured thereon. The bottom member includes a front and back surface as well as a perimeter portion that includes, in various instances, a channel and a clasping mechanism **37** positioned therein. The clasping mechanisms are configured to be corresponding and function to lock the top and bottom members together.

The top **2** member perimeter portion **20** and the bottom member **3** may be produced in any suitable manner in accordance with the methods well know in the art. For instance, a suitable top member perimeter portion **20** and a bottom member **3** may be produced by moulding such as by injection moulding. Although it is recognized that other suitable moulding and/or fabrication techniques may also be employed, such as by casting and/or machining. As indicated above, a top member perimeter portion **20** may be composed of any suitable material, but is typically composed of a rigid or semi-rigid material such as a stiff plastic, such as polycarbonate. Likewise, the bottom member may be composed of any suitable material, such as from a rigid, semi-rigid, or flexible material, such as polypropylene.

As detailed herein, both top **2** and bottom **3** members have various additional features therein, which features may be produced thereon in various suitable ways, an exemplified version of which is herein described. For instance, in certain embodiments, such as provided in FIGS. **3**L and **3**M, the bottom member includes a channel **10** having internal teeth receptacles **13***b* and the top member includes teeth **13***a* on a perimeter thereof. The channel **10** includes an exterior perimeter portion **30***b* having a clasping mechanism, such as a circumferential groove provided therein, e.g., by tooling, and further includes an interior bonding member **20***a*.

The channel **10** may be produced during the injection moulding process wherein the polypropylene material is injected into a suitable mould, the channel formed, and one or more sliding elements, e.g., sliders, are positioned thereon so as to push through the interior bounding member **20***a* and partially enter the channel **10**. For instance, the teeth receptacles **13***b* of the interior perimeter portion **20***a* of the channel **10** of the bottom member **3** may be produced by the use of a plurality of elements that are capable of producing undercut features, such as sliders, that once the bottom member has been injected into the mold and cooled to an insertion temperature, are positioned exterior to the interior bounding member **20***a* in a central portion of the bottom member **3**. In one embodiment, five sliders are employed, but more or less sliders may be used dependent on the configuration. The sliders are positioned around an interior perimeter portion of the bottom member and as the moulded bottom member continues to cool the sliders are moved, e.g., sequentially, inward toward the center of the bottom member **3**, forming the teeth receptacles **13***b*, and then the sliders are retraced upwards. The sliders therefore come down, move laterally in, move laterally out, and then are retracted.

The top member **2** perimeter portion **20** can also be produced by injecting polycarbonate into a suitable mould. Once moulded and suitably cooled cutout tools, as described above, may be employed to produce one or more apertures therein, such as various port, switch, or button openings may be produced therein. Suitable water impermeable vent materials may be placed to cover various sound inlet/outlet apertures as described above such as by a suitable adhesive and/or by overmoulding.

Once cooled a top surface membrane **25** may be attached thereto, e.g., via an adhesive, such as a pressure or thermal activated adhesive. The membrane **25** may be attached to a top surface portion of the polycarbonate frame or to an underneath top surface portion. In certain embodiments, an outer perimeter portion **20***b* of the top member **2** is to be added to the polycarbonate frame, such as via an overmould process, as described above. In this manner the top member **2** having the features described herein above may be produced.

Additionally, as indicated above, atop surface membrane **25** may include several features. These features may be formed, punched, and/or cut into the membrane **25**. For instance, the button feature **40** may be cut into the membrane **25** and its components assembled therein or it can be thermal formed as an indented region of the membrane **25**. The lens feature **47** may be punched and/or the sound transmission portion **44** may be cut into the membrane and the associated elements attached thereto, such as via suitable adhesives.

Once these features have been formed, suitable associated elements, such as impermeable vent materials, scrims, screens, and gaskets can then be added by hand or machine to ensure every aperture is sealed, plugged, or otherwise covered. It is to be noted, with respect to the sound transmission channel **60**, e.g., microphone or speaker channel, the vent material **65** may be overmouled with one or both of an overmould material **67** and/or a grille material **68**. The vent material, may therefore be added prior to the overmould process described above. It is to be noted that the various assembling of screens and attachment thereof my include one or more of the addition of a suitable adhesive, such as a glue, a pressure or thermal sensitive or other suitable adhesive, and/or an over moulding process. Also, it is understood that where the housing does not include a front membrane **25**, one or more of the described vent materials, screens, or plugs may be applied directly to a device to be housed, such as by use of an adhesive (e.g., stickers configured for acting as water impermeable vents) or by using compressible pug elements, and the like.

Once these features have been formed, a suitable formed charge port door feature **70** and earphone port cover **53** may be assembled, gaskets added, and then they may be coupled to their respective top and bottom members and the housing **1** formed by the coupling of the top member with the bottom member.

FIG. **21** provides a jig device **500** that may be employed in a method of attaching a front membrane **25** to a perimeter portion **20** of a top member **2** of the housing **1** of the disclosure. The jig **500** includes moving housing engagement members **501** that are capable of moving laterally inwards and outwards. The engagement members **501** are configured so as to fit a perimeter portion **20** of the housing therein. The jig **500** further includes tensioning elements **502** which can be employed in moving the engagement elements **501** inwards and outwards, thereby compressing or expanding the perimeter portion **20**. The jig also includes securing bolts **503** that function to secure the jig in place.

In use, in certain embodiments, a formed perimeter portion **20** is inserted into the moveable engagement members **501**. The engagement members **501** are contacted to the perimeter portion **20** and the tensioning elements **502** are engaged so as to compress the interior dimension of the perimeter portion **20**, e.g., to compress its sides inwards. A suitably formed membrane material **25** is then attached to the perimeter portion **20**, e.g., via a suitable adhesive, such as a pressure or thermal sensitive adhesive. In this instance, the membrane **25** is configured for attaching to the perimeter portion **20** in its compressed configuration. Once attached, the tensioning element **502** may be adjusted to relax the tension and the perimeter portion **20** may then be removed from the jig **500**. Once the tension is released the perimeter portion **20** will return to its pre-compressed dimension thereby causing the membrane **25** to be stretched. In a manner such as this a top member **2** having a perimeter portion **20** and a top surface membrane **25** may be produced, wherein the top surface membrane **25** is taught and flat across its surface. Further, once attached, the perimeter portion **20***a* and membrane **25** may then be over-moulded to form a suitable exterior perimeter portion, such as with a more flexible rubber or TPE material. Accordingly, this process results in a top member **2**, as described herein, with a front membrane **25** interface region that is flat, smooth, and responsive to touch, which in turn makes the user interface with a hosed device more efficient, easier to use, and more enjoyable.

The above figures may depict exemplary configurations for an apparatus of the disclosure, which is done to aid in understanding the features and functionality that can be included in the housings described herein. The apparatus is not restricted to the illustrated architectures or configurations, but can be implemented using a variety of alternative architectures and configurations. Additionally, although the apparatus is described above in terms of various exemplary embodiments and implementations, it should be understood that the various features and functionality described in one or more of the individual embodiments with which they are described, but instead can be applied, alone or in some combination, to one or more of the other embodiments of the disclosure, whether or not such embodiments are described and whether or not such features are presented as being a part of a described embodiment. Thus the breadth and scope of the present disclosure, especially in any following claims, should not be limited by any of the above-described exemplary embodiments.

Terms and phrases used in this document, and variations thereof, unless otherwise expressly stated, should be construed as open ended as opposed to limiting. As examples of the foregoing: the term "including" should be read to mean "including, without limitation" or the like; the term "example" is used to provide exemplary instances of the item in discussion, not an exhaustive or limiting list thereof; and adjectives such as "conventional," "traditional," "standard," "known" and terms of similar meaning should not be construed as limiting the item described to a given time period or to an item available as of a given time, but instead should be read to encompass conventional, traditional, normal, or standard technologies that may be available or known now or at any time in the future. Likewise, a group of items linked with the conjunction "and" should not be read as requiring that each and every one of those items be present in the grouping, but rather should be read as "and/or" unless expressly stated otherwise. Similarly, a group of items linked with the conjunction "or" should not be read as requiring mutual exclusivity among that group, but rather should also be read as "and/or" unless expressly stated otherwise. Furthermore, although item, elements or components of the disclosure may be described or claimed in the singular, the plural is contemplated to be within the scope thereof unless limitation to the singular is explicitly stated. The presence of broadening words and phrases such as "one or more," "at least," "but not limited to" or other like phrases in some instances shall not be read to mean that the narrower case is intended or required in instances where such broadening phrases may be absent. Additionally, where a range is set forth, the upper and lower limitations of the range are inclusive of all of the intermediary units therein.

The foregoing description is intended to illustrate but not to limit the scope of the disclosure, which is defined by the scope of the appended claims. Other embodiments are within the scope of the following claims.

What is claimed is:

1. A housing for an electronic device, the housing comprising:

a top member having a front surface and a back surface, the back surface surrounded by a perimeter portion defined by a proximal end portion, a distal end portion, and opposing side portions, the top member further comprising a rigid frame that defines a cavity into which the electronic device may be fitted;

a bottom member configured for being removably coupled with the top member, the bottom member having a front surface and a back surface surrounded by a perimeter portion defined by a proximal end portion, a distal end portion, and opposing side portions, the perimeter portion of the bottom member corresponding to a shape of the perimeter portion of the top member;

a membrane defining the front surface and back surface of the top member and being mated on a top ridge of the rigid frame, the membrane extending from the proximal end portion to the distal end portion and across the opposing side portions of the top member;

a channel in a top surface of the perimeter portion of the bottom member to receive a bottom ridge of the rigid frame, the channel including a gasket to compress against the bottom ridge of the rigid frame when the top member and the bottom member are coupled together to seal the housing; and

each of the top and bottom members having a respective clasping mechanism that extends along a respective perimeter portion of its respective top or bottom member, each clasping mechanism interfacing with the other clasping mechanism to maintain the top member and the bottom member coupled together, the clasping mechanism of the bottom member having a groove in a side of the channel, and the clasping mechanism of the top member having a lip extending from the bottom ridge of the rigid frame, the lip engaging the groove when the top member and bottom member are coupled together.

2. The housing in accordance with claim **1**, wherein the rigid frame has a side wall that includes at least one aperture.

3. The housing in accordance with claim **2**, further comprising a door pivotally connected to the bottom member, the door for closing and sealing the at least one aperture in the side wall of the rigid frame.

4. The housing in accordance with claim **3**, wherein the door includes a rigid surface defining a gasket seat, and a gasket positioned in the gasket seat for sealing the at least one aperture in the side wall of the rigid frame.

5. The housing in accordance with claim **2**, wherein the rigid frame includes a second aperture configured for being removably connected to a sealing member.

6. The housing in accordance with claim 5, wherein the second aperture is removably connected to the sealing member, and wherein the second aperture and the sealing member each have corresponding thread elements.

7. The housing in accordance with claim 1, wherein a portion of the membrane is transparent, which transparent portion is sized and adapted to overlay a screen of the electronic device.

8. The housing in accordance with claim 7, wherein a portion of the membrane is non-transparent and the non-transparent portion of the membrane includes at least one transparent lens.

9. The housing in accordance with claim 8, wherein the at least one transparent lens includes:

a first transparent lens positioned to be overlaid a camera lens portion of the electronic device; and

a second transparent lens positioned to be overlaid a proximity sensor portion of the electronic device.

10. The housing in accordance with claim 1, further comprising a camera lens defined in the bottom member and extending through the front surface and back surface of the bottom member.

11. An apparatus comprising:

a top member comprising:

a rigid frame that defines a perimeter portion having a proximal end portion, a distal end portion, and opposing side portions of the top member, the rigid frame having a top ridge and a bottom ridge, the bottom ridge including a first clasping mechanism;

a membrane defining a front surface and a back surface of the top member and being mated on the top ridge of the rigid frame, the membrane spanning from the proximal end portion to the distal end portion and across the opposing side portions of the perimeter portion of the top member; and

a bottom member, which when coupled to the top member, forms a housing to enclose an electronic device to allow touch-sensitive user inputs to the electronic device via the membrane of the top member, the bottom member comprising:

a channel in a top surface of the perimeter portion of the bottom member to receive the bottom ridge of the rigid frame, the channel including a gasket positioned therein to compress against the bottom ridge of the rigid frame to seal the housing when the top member and the bottom member are coupled together, the channel further including a second clasping mechanism to interface with the first clasping mechanism to maintain the top member and the bottom member coupled together.

12. The apparatus in accordance with claim 11, wherein the rigid frame includes at least one aperture in a side wall of the rigid frame.

13. The apparatus in accordance with claim 12, further comprising a door pivotally connected to the housing, the door for closing and sealing the at least one aperture in the side wall of the rigid frame.

14. The apparatus in accordance with claim 13, wherein the door includes a rigid surface defining a gasket seat, and a gasket positioned in the gasket seat for sealing the at least one aperture in the side wall of the rigid frame.

15. The apparatus in accordance with claim 11, wherein the clasping mechanism of the bottom member includes a groove in a side of the channel, and wherein the clasping mechanism of the top member includes a lip extending from the bottom ridge of the rigid frame, the lip engaging the groove when the top member and bottom member are coupled together.

16. The apparatus in accordance with claim 11, wherein at least a part of the membrane is transparent and a part of the membrane is not transparent, the non-transparent portion of the membrane including at least one transparent lens.

17. An apparatus for housing an electronic device, the apparatus comprising:

a bottom member comprising a front surface and a back surface with at least one lens formed therein, and surrounded by a perimeter portion defined by a proximal end portion, a distal end portion, and opposing side portions, the perimeter portion of the bottom member having a channel formed by an interior perimeter portion and an exterior perimeter portion, the channel including a compressible gasket positioned therein;

a top member having an inner perimeter defined by a rigid frame that corresponds to an outer perimeter of the electronic device and the perimeter portion of the bottom member, the rigid frame extending to a ridge that is adapted to clasp within the channel of the bottom member and seal against the gasket, the top member further including a plurality of sealed buttons and a plurality of sealable apertures, and a membrane that overlays the rigid frame opposite the ridge, the membrane having a transparent area.

18. The apparatus in accordance with claim 17, wherein the top member further includes a flexible portion overlaid on at least part of an exterior portion of the rigid frame and over at least part of a perimeter portion of the membrane.

19. The apparatus in accordance with claim 17, wherein the bottom member includes a hinged door to latch over and seal one of the plurality of sealable apertures of the top member.

20. The apparatus in accordance with claim 17, further comprising a removable sealing member for sealing one of the plurality of apertures of the top member.

* * * * *

JS 44 (Rev. 12/12)

CIVIL COVER SHEET

The JS 44 civil cover sheet and the information contained herein neither replace nor supplement the filing and service of pleadings or other papers as required by law, except as provided by local rules of court. This form, approved by the Judicial Conference of the United States in September 1974, is required for the use of the Clerk of Court for the purpose of initiating the civil docket sheet. *(SEE INSTRUCTIONS ON NEXT PAGE OF THIS FORM.)*

I. (a) PLAINTIFFS
Treefrog Developments, Inc. d/b/a LifeProof

(b) County of Residence of First Listed Plaintiff San Diego, CA
(EXCEPT IN U.S. PLAINTIFF CASES)

(c) Attorneys *(Firm Name, Address, and Telephone Number)*
Matthew C. Bernstein
Perkins Coie LLP, 11988 El Camino Real, Suite 200, San Diego, CA 92130-3334, (858) 720-5700

DEFENDANTS
The Joy Factory, Inc.

County of Residence of First Listed Defendant Orange, CA
(IN U.S. PLAINTIFF CASES ONLY)
NOTE: IN LAND CONDEMNATION CASES, USE THE LOCATION OF THE TRACT OF LAND INVOLVED.

Attorneys *(If Known)*

'13CV0159 DMS WMC

II. BASIS OF JURISDICTION *(Place an "X" in One Box Only)*

- ☐ 1 U.S. Government Plaintiff
- ☒ 3 Federal Question *(U.S. Government Not a Party)*
- ☐ 2 U.S. Government Defendant
- ☐ 4 Diversity *(Indicate Citizenship of Parties in Item III)*

III. CITIZENSHIP OF PRINCIPAL PARTIES *(Place an "X" in One Box for Plaintiff and One Box for Defendant)*
(For Diversity Cases Only)

	PTF	DEF		PTF	DEF
Citizen of This State	☐ 1	☐ 1	Incorporated *or* Principal Place of Business In This State	☐ 4	☐ 4
Citizen of Another State	☐ 2	☐ 2	Incorporated *and* Principal Place of Business In Another State	☐ 5	☐ 5
Citizen or Subject of a Foreign Country	☐ 3	☐ 3	Foreign Nation	☐ 6	☐ 6

IV. NATURE OF SUIT *(Place an "X" in One Box Only)*

CONTRACT
- ☐ 110 Insurance
- ☐ 120 Marine
- ☐ 130 Miller Act
- ☐ 140 Negotiable Instrument
- ☐ 150 Recovery of Overpayment & Enforcement of Judgment
- ☐ 151 Medicare Act
- ☐ 152 Recovery of Defaulted Student Loans (Excludes Veterans)
- ☐ 153 Recovery of Overpayment of Veteran's Benefits
- ☐ 160 Stockholders' Suits
- ☐ 190 Other Contract
- ☐ 195 Contract Product Liability
- ☐ 196 Franchise

REAL PROPERTY
- ☐ 210 Land Condemnation
- ☐ 220 Foreclosure
- ☐ 230 Rent Lease & Ejectment
- ☐ 240 Torts to Land
- ☐ 245 Tort Product Liability
- ☐ 290 All Other Real Property

TORTS

PERSONAL INJURY
- ☐ 310 Airplane
- ☐ 315 Airplane Product Liability
- ☐ 320 Assault, Libel & Slander
- ☐ 330 Federal Employers' Liability
- ☐ 340 Marine
- ☐ 345 Marine Product Liability
- ☐ 350 Motor Vehicle
- ☐ 355 Motor Vehicle Product Liability
- ☐ 360 Other Personal Injury
- ☐ 362 Personal Injury - Medical Malpractice

PERSONAL INJURY
- ☐ 365 Personal Injury - Product Liability
- ☐ 367 Health Care/ Pharmaceutical Personal Injury Product Liability
- ☐ 368 Asbestos Personal Injury Product Liability

PERSONAL PROPERTY
- ☐ 370 Other Fraud
- ☐ 371 Truth in Lending
- ☐ 380 Other Personal Property Damage
- ☐ 385 Property Damage Product Liability

CIVIL RIGHTS
- ☐ 440 Other Civil Rights
- ☐ 441 Voting
- ☐ 442 Employment
- ☐ 443 Housing/ Accommodations
- ☐ 445 Amer. w/Disabilities - Employment
- ☐ 446 Amer. w/Disabilities - Other
- ☐ 448 Education

PRISONER PETITIONS

Habeas Corpus:
- ☐ 463 Alien Detainee
- ☐ 510 Motions to Vacate Sentence
- ☐ 530 General
- ☐ 535 Death Penalty

Other:
- ☐ 540 Mandamus & Other
- ☐ 550 Civil Rights
- ☐ 555 Prison Condition
- ☐ 560 Civil Detainee - Conditions of Confinement

FORFEITURE/PENALTY
- ☐ 625 Drug Related Seizure of Property 21 USC 881
- ☐ 690 Other

LABOR
- ☐ 710 Fair Labor Standards Act
- ☐ 720 Labor/Management Relations
- ☐ 740 Railway Labor Act
- ☐ 751 Family and Medical Leave Act
- ☐ 790 Other Labor Litigation
- ☐ 791 Employee Retirement Income Security Act

IMMIGRATION
- ☐ 462 Naturalization Application
- ☐ 465 Other Immigration Actions

BANKRUPTCY
- ☐ 422 Appeal 28 USC 158
- ☐ 423 Withdrawal 28 USC 157

PROPERTY RIGHTS
- ☐ 820 Copyrights
- ☒ 830 Patent
- ☐ 840 Trademark

SOCIAL SECURITY
- ☐ 861 HIA (1395ff)
- ☐ 862 Black Lung (923)
- ☐ 863 DIWC/DIWW (405(g))
- ☐ 864 SSID Title XVI
- ☐ 865 RSI (405(g))

FEDERAL TAX SUITS
- ☐ 870 Taxes (U.S. Plaintiff or Defendant)
- ☐ 871 IRS—Third Party 26 USC 7609

OTHER STATUTES
- ☐ 375 False Claims Act
- ☐ 400 State Reapportionment
- ☐ 410 Antitrust
- ☐ 430 Banks and Banking
- ☐ 450 Commerce
- ☐ 460 Deportation
- ☐ 470 Racketeer Influenced and Corrupt Organizations
- ☐ 480 Consumer Credit
- ☐ 490 Cable/Sat TV
- ☐ 850 Securities/Commodities/ Exchange
- ☐ 890 Other Statutory Actions
- ☐ 891 Agricultural Acts
- ☐ 893 Environmental Matters
- ☐ 895 Freedom of Information Act
- ☐ 896 Arbitration
- ☐ 899 Administrative Procedure Act/Review or Appeal of Agency Decision
- ☐ 950 Constitutionality of State Statutes

V. ORIGIN *(Place an "X" in One Box Only)*

☒ 1 Original Proceeding ☐ 2 Removed from State Court ☐ 3 Remanded from Appellate Court ☐ 4 Reinstated or Reopened ☐ 5 Transferred from Another District *(specify)* ☐ 6 Multidistrict Litigation

VI. CAUSE OF ACTION
Cite the U.S. Civil Statute under which you are filing *(Do not cite jurisdictional statutes unless diversity)*:
35 U.S.C. § 1 et seq.
Brief description of cause:
Patent Infringement

VII. REQUESTED IN COMPLAINT: ☐ CHECK IF THIS IS A CLASS ACTION UNDER RULE 23, F.R.Cv.P. **DEMAND $** CHECK YES only if demanded in complaint: **JURY DEMAND:** ☒ Yes ☐ No

VIII. RELATED CASE(S) IF ANY *(See instructions):* JUDGE _____ DOCKET NUMBER _____

DATE 01/19/2013

SIGNATURE OF ATTORNEY OF RECORD s/ Matthew C. Bernstein

FOR OFFICE USE ONLY

RECEIPT # _____ AMOUNT _____ APPLYING IFP _____ JUDGE _____ MAG. JUDGE _____