USDC SCAN INDEX SHEET

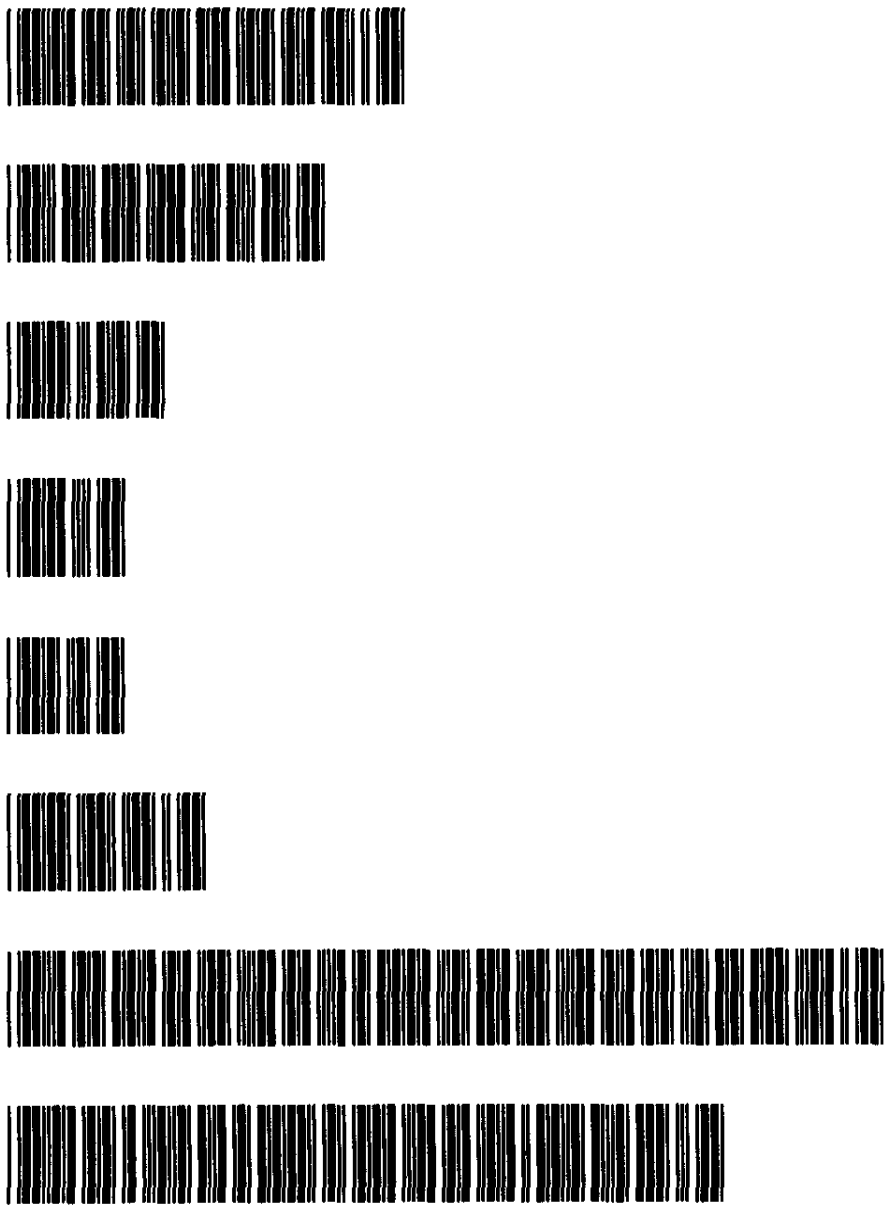

BJR 7/10/00 13:23
3:00-CV-01350 DIRECTED ELECTRONICS V. SOUND MASTER INC
1
CMP.

ORIGINAL

STEPHEN S. KORNICZKY (State Bar No. 135532)
KRISTEN E. CAVERLY (State Bar No. 175070)
BROBECK, PHLEGER & HARRISON LLP
12390 El Camino Real
San Diego, CA 92130-2081
Telephone: (858) 720-2500
Facsimile: (858) 720-2555

Attorneys for Plaintiff
Directed Electronics, Inc.

FILED
JUL - 7 2000
CLERK, U.S. DISTRICT COURT
SOUTHERN DISTRICT OF CALIFORNIA
BY B. Reed DEPUTY

UNITED STATES DISTRICT COURT

SOUTHERN DISTRICT OF CALIFORNIA

'00 CV 01350 JM (POR)

DIRECTED ELECTRONICS, INC., a California corporation,

Plaintiff,

v.

SOUND MASTER, INC., a California corporation; and WON SIK IM, an individual, doing business as K.J. STEREO and C-TECH ELECTRONICS WHOLESALE,

Defendants.

Case No.

COMPLAINT FOR:

1) **Federal Patent Infringement (35 U.S.C. § 271);**
2) **Federal Trademark Infringement (15 U.S.C. §1114);**
3) **Federal Unfair Competition, False Designation of Origin, and Dilution (15 U.S.C. §1125(2));**
4) **Tortious Interference with Contract;**
5) **State Unfair Competition (Cal. Bus. & Prof. Code §17200);**
6) **State False/Misleading Advertisement (Cal. Bus. & Prof. Code § 17500)**
7) **State Trademark Infringement (Cal. Bus. & Prof. Code §14335);**
8) **Dilution and Injury to Business Reputation (Cal Bus. & Prof. Code §§14320, 14330);**
9) **Common Law Unfair Competition; and**
10) **Breach of Contract**

JURY TRIAL DEMANDED

SDILIB\DAQ\313972.01 (6Q9G01!.DOC)

Plaintiff DIRECTED ELECTRONICS, INC., ("DIRECTED") alleges as follows:

THE PARTIES

1. DIRECTED is a California corporation with its principal place of business at One Viper Way, Vista, California 92083. DIRECTED is engaged in the business of designing, manufacturing and selling, through non-exclusive authorized dealers, vehicle security systems including the VIPER®, Python®, Sidewinder®, Rattler®, and Rattlesnake® vehicle security systems. The VIPER® line of vehicle security systems is the highest quality line of vehicle security systems manufactured and sold by DIRECTED.

2. DIRECTED is informed and believes that defendant Sound Master, Inc. is a California corporation engaged in the business of selling and installing car alarms with its principle place of business located at 7519 Alondra Boulevard, Paramount, California 90723.

3. DIRECTED is informed and believes that defendant Won Sik Im is an individual doing business under the fictitious names of K.J. Stereo and C-Tech Electronics Wholesale, residing in Los Angeles County, California, and engaged in the business of selling and installing car alarms at the following locations: (a) 962 East 12th Street, Los Angeles, California 90021; and (b) 13000 South Avalon Boulevard, #N36, Los Angeles, California 90061. Defendant Won Sik Im is identified as the president and registered agent for service of process in defendant Sound Master, Inc.'s corporate filings with the California Secretary of State.

JURISDICTION AND VENUE

4. Pursuant to 28 U.S.C. sections 1331 and 1338(a), this Court has original and exclusive jurisdiction in this matter over each of the following claims:

a. Patent infringement pursuant to 35 U.S.C. section 27;

b. Trademark infringement pursuant to 15 U.S.C. sections 1051, *et. seq.*; and

c. False designation of origin, false description or representation, and dilution in violation of the Lanham Act section 43(a), 15 U.S.C. section 1125(a).

5. Pursuant to 28 U.S.C. sections 1331 and 1338(b), this Court has original jurisdiction in this matter over each of the following claims:

a. Unfair competition; and

b. Unfair business practices in violation of California's Business and Professions Code section 17200.

6. Pursuant to 28 U.S.C. section 1367, this Court has supplemental jurisdiction in this matter over each of the following claims:

a. False and misleading advertising in violation of California's Business and Professions Code section 17500;

b. State Trademark Infringement in violation of California Business and Professions Code section 14335;

c. State dilution and injury to business reputation in violation of California Business and Professions Code section 14330;

d. Interference with contract; and

e. Breach of Contract.

7. Venue properly lies in this district pursuant to 28 U.S.C. section 1391(c) because defendant Sound Master, Inc. is a corporation having sufficient involvement with the County of San Diego, Southern District of California to subject it to personal jurisdiction if this District were a separate state and has contractually agreed that San Diego County is the appropriate venue for disputes arising from its contract with DIRECTED.

GENERAL ALLEGATIONS

8. DIRECTED has been engaged in the business of manufacturing and distributing vehicle security systems for 14 years. DIRECTED's VIPER® vehicle security products have a reputation in the industry for being of extremely high quality.

9. In an effort to create and further public awareness of DIRECTED's trademarks, DIRECTED has expended large sums of money in promotion, marketing and advertising throughout the State of California and nationally. In 1999, DIRECTED spent approximately $2 million on advertising; DIRECTED already has spent $1.2 million in advertising this year.

10. In 1999, DIRECTED sold $31 million dollars worth of VIPER® vehicle security systems. DIRECTED's total 1999 sales were approximately $86 million.

///

Trademarks

11. DIRECTED has adopted and is using the following federally registered trademarks to promote, distinguish and sell its vehicle security systems:

- VIPER®, United States Trademark Registration No. 1,756,693 issued on March 9, 1993. A true and correct copy of the VIPER® certificate of registration is attached hereto as Exhibit A and is incorporated herein by this reference.
- Forward Facing Snake Image, United States Trademark Registration No. 1,822,608 issued on February 22, 1994 (referred to in advertising as "Vinnie the Viper"). A true and correct copy of the forward facing snake image certificate of registration is attached hereto as Exhibit B and is incorporated herein by this reference.
- DEI®, United States Trademark Registration No. 1,873,747 issued on January 17, 1995. A true and correct copy of the DEI® certificate of registration is attached hereto as Exhibit C and is incorporated herein by this reference.
- Module Case Line Decoration, United States Trademark Registration No. 2,218,082 issued on January 19, 1999 and United States Trademark Registration No. 2,218,081. A true and correct copy of the module case line decoration certificate of registration for No. 2,218,082 is attached hereto as Exhibit D and is incorporated herein by this reference.
- NO ONE DARES COME CLOSE®, United States Trademark Registration No. 1,848,176 issued on August 2, 1994. A true and correct copy of the NO ONE DARES COME CLOSE® certificate of registration is attached hereto as Exhibit E and is incorporated herein by this reference.
- VIPER® With Snake Head and Tail Image, United States Trademark Registration No. 1,961,709 issued on March 12, 1996.
- WARN AWAY®, United States Trademark Registration No. 1,924,872 issued on October 3, 1995.
- BITWRITER®, United States Trademark Registration No. 2,301,471 issued on December 21, 1999.
- CODE-HOPPING®, United States Trademark Registration No. 2,301,162 issued on December 21, 1999.
- CODE PLUS®, United States Trademark Registration No. 1,943,761 issued on December 26, 1995.
- ESP®, United States Trademark Registration No. 2,315,849 issued on February 8, 2000.
- FAILSAFE®, United States Trademark Registration No. 1,709,910 issued on August 25, 1992.
- NPC®, United States Trademark Registration No. 2,291,545 issued on November 9, 1999.

- NUISANCE PREVENTION®, United States Trademark Registration No. 1,937,559 issued on November 21, 1995.
- REVENGER®, United States Trademark Registration No. 1,962,705 issued on March 19, 1996.
- SOFT CHIRP®, United States Trademark Registration No. 1,949,768 issued on January 16, 1996.
- STINGER®, United States Trademark Registration No. 1,937,900 issued on November 28, 1995.
- VALET®, United States Trademark Registration No. 1,721,572 issued on October 6, 1992.
- VRS®, United States Trademark Registration No. 1,831,266 issued on April 19, 1994.

12. DIRECTED has continually promoted the sale, through interstate commerce, of its vehicle security products bearing some or all of the above trademarks. Among other things, DIRECTED's VIPER®, NO ONE DARES COME CLOSE®, DEI® and snake image trademarks are placed on its product packaging, on its product brochures and pamphlets, on banners and window decals, and on miscellaneous promotional merchandise including cups, coffee mugs, posters, t-shirts, etc. Use of the referenced trademarks for these related marketing purposes is covered by separate registrations. DIRECTED also uses its VIPER®, DEI® and snake image trademarks in television, newspaper and magazine advertisements.

13. As a result of DIRECTED's advertising, marketing and other promotional efforts, the VIPER®, DEI®, NO ONE DARES COME CLOSE®, and the snake image trademarks have become widely known and extremely valuable goodwill has developed in each. By virtue of this advertising, marketing and promotion, and the extensive use of these marks, the VIPER®, DEI®, NO ONE DARES COME CLOSE®, and the snake image trademarks have become distinctive of DIRECTED's goods, and are closely identified with DIRECTED's goodwill and reputation.

Patents

14. Many of the components of DIRECTED's VIPER® vehicle security systems are covered by design and/or utility patents issued by the United States Patent and Trademark Office.

15. DIRECTED owns or is a licensee of the following active patents, among others, relating to the VIPER® vehicle security systems:

SDILIB1 DAQ
313972 01
(6Q9G01! DOC)

- Vehicle Alarm Case Module, United States Patent No. Des. 345,711 issued April 5, 1994. A true and correct copy of Patent No. Des. 345,711 is incorporated herein by reference and attached hereto as Exhibit F.
- Motion Sensitive Security System, United States Patent No. 4,584,569 issued April 22, 1986 (Reexamination No. B1 4,584,569 issued June 19, 1990). A true and correct copy of Patent No. 4,584,569 is incorporated herein by reference and attached hereto as Exhibit G.
- Method of Indicating the Threat Level of an Incoming Shock to an Electronically Secured Vehicle and Apparatus Therefore, United States Patent No. 5,532,670 issued July 2, 1996. A true and correct copy of Patent No. 5,532,670 is incorporated herein by reference and attached hereto as Exhibit H.
- Advanced Method of Indicating Incoming Threat Level to an Electronically Secured Vehicle and Apparatus Therefore, United States Patent No. 5,646,591 issued July 8, 1997. A true and correct copy of Patent No. 5,646,591 is incorporated herein by reference and attached hereto as Exhibit I.
- Remote Control Transmitter, United States Patent No. Des. 419,474 issued January 25, 2000.
- Siren, United States Patent No. 345,317 issued March 22, 1994.
- Advanced Automotive Automation and Security System, United States Patent No. 5,534,845 issued July 9, 1996.
- Car Alarm Having A Soft Chirp Arming Signal, United States Patent No. 5,572,185 issued November 5, 1996.
- User-Programmable Voice Notification Device for Security Alarm Systems, United States Patent No. 5,245,694 issued September 14, 1993.
- Advanced Embedded Code Hopping System, United States Patent No. 5,872,519 issued February 16, 1999.
- Alarm Sensor Multiplexing, United States Patent No. 5,783,989 issued July 21, 1998.
- Alarm Sensor Multiplexing, United States Patent No. 5,900,806 issued May 4, 1999.

16. DIRECTED's VIPER® products are covered by some or all of the above listed patents.

17. DIRECTED is informed and believes that sellers and purchasers of DIRECTED's VIPER® products have actual or constructive notice of the applicable patents. DIRECTED gives notice to the public of the patents covering its VIPER® vehicle security systems by placing a card or piece of paper in each product box which lists all of DIRECTED's patents by number and states that "This product is covered by one or more of the following U.S. patents...."

///

Authorized Distribution Only

18. DIRECTED has manufactured and/or does manufacture several VIPER® vehicle security system models, including but not limited to the 300+; 300 ESP®; 300 HF; 500+; 500 ESP®; 500HF; 550HF; 600HF; 800 SHF and Viper Code Plus.

19. DIRECTED permits its VIPER® vehicle security systems to be advertised, sold and installed only by its contractually authorized dealers. DIRECTED's dealers are carefully selected, and are, thereafter, trained, supported and monitored by DIRECTED and its representatives. DIRECTED's highly selective dealers are chosen, in part, because they have appropriate facilities and installation equipment and because they have skilled and trained vehicle security system installers.

20. DIRECTED has expended, and continues to expend, substantial financial and other resources in an effort to control the quality of the installation of its vehicle security system products. In addition to being highly selective when choosing its dealers, DIRECTED spends significant time, effort and money educating its dealers with respect to DIRECTED's products, and training its dealers with respect to the installation of its vehicle security systems. DIRECTED, at considerable expense, further provides its dealers with "real-time" telephone support and access to computerized information regarding the detailed electrical systems of, and installation and wiring requirements for, numerous domestic and foreign automobiles sold in the United States.

21. DIRECTED also visually monitors its authorized dealers from time to time to make sure they are maintaining the necessary quality standards for the sale and installation of DIRECTED's products.

22. DIRECTED often terminates authorized dealers if it finds they have violated the terms of their agreement.

23. A VIPER® vehicle security system, unlike other products commercially available, is not an "off the shelf" component part. It includes among others, a siren, a wiring harness and various alarm sensors. The VIPER® vehicle security system does not operate until properly installed in the electrical system of the vehicle.

///

24. If a VIPER® vehicle security system is not installed properly, it will not adequately protect against theft of the vehicle. More importantly, faulty installation may interfere with the proper functioning of the vehicle and, as a result, pose a safety risk to the customer and others, including creating a fire hazard. It is for these reasons, among others, that DIRECTED spends considerable time, effort and resources educating, training and supporting its authorized dealers with respect to the sale and installation of its VIPER® vehicle security systems.

25. Maintaining control over the quality of the installation of VIPER® vehicle security systems is further crucial to DIRECTED because the failure of the system to operate properly - even though that failure is due to faulty installation as opposed to a defect in the product itself - will cause the consumer to believe that the product itself is defective. The goodwill and reputation, that DIRECTED has spent substantial time, effort and money developing, will thereby be tarnished and damaged, particularly where the failure of the system to operate properly causes a theft of either the consumer's vehicle or personal property located inside the vehicle. It is for this additional reason, as well as those stated above, that in addition to providing extensive training for its authorized dealers, DIRECTED contractually obligates its authorized dealers to install the vehicle security systems on the dealer's premises, occasionally visits its authorized dealers to observe the quality of installation of its products, makes available to its authorized dealers, by telephone, the technical representatives capable of assisting the dealers with installation problems as they arise, and provides the computer software to its authorized dealers containing the electronic circuitry for numerous domestic and foreign vehicles sold in the United States and abroad.

26. To further maintain control over the quality of its product installation, DIRECTED does not permit its authorized dealers to sell DIRECTED's VIPER® vehicle security system to anyone who is not an ultimate consumer, and they are not permitted to sell a VIPER® vehicle security system to an ultimate consumer unless the alarm is installed by the authorized dealer on the authorized dealer's premises.

27. Defendant Sound Master, Inc. was an authorized dealer of VIPER® products until DIRECTED terminated its authorized dealer agreement in June 2000 in accordance with the terms of such agreement. At the time of the actions complained of herein, defendant Won Sik Im doing

SDILIB1 DAQ
313972 01
(6Q9G01!.DOC)

business as K.J. Stereo and C-Tech Electronics Wholesale was not an authorized dealer of VIPER® products.

Warranty

28. As one of its primary marketing tools, DIRECTED includes with each VIPER® vehicle security system its limited lifetime consumer warranty. DIRECTED has expended substantial time and money in making the general public aware of the benefits of the warranty. Though there are certain specified limitations not referenced here, DIRECTED's lifetime warranty essentially promises the original VIPER® purchaser that: the product will be repaired or replaced if the product "proves to be defective in workmanship or material under normal use during the lifetime of the vehicle."

29. It is specifically stated in the VIPER® warranty that it is valid if "the unit was professionally installed and serviced by an authorized DEI dealer. Thus, anyone purchasing a VIPER® vehicle security system from an unauthorized dealer or an authorized dealer who sold the product without installation does not receive any warranty or guarantee of the product from DIRECTED. A true and correct copy of the terms of DIRECTED's limited lifetime warranty is attached hereto as Exhibit J and incorporated herein by this reference.

30. DIRECTED's ongoing business depends heavily upon the proper functioning of its VIPER® vehicle security systems in vehicles in which it is installed, on the valuable reputation it has developed as a result of the quality of its product and its installation, and on the goodwill it has developed through the sale, promotion and marketing of its products and its VIPER®, DEI® and snake image and other trademarks. The warranty has further contributed to the excellent reputation DIRECTED enjoys with the general public with respect to its products.

Defendants' Conduct

31. DIRECTED is informed and believes that, subsequent to the adoption and use by DIRECTED of its VIPER®, DEI®, NO ONE DARES COME CLOSE® and snake image and other trademarks for vehicle security systems, defendant Won Sik Im, who is not a DIRECTED authorized dealer, commenced advertising and marketing vehicle security systems by using the VIPER® and/or snake image trademarks to draw in customers. DIRECTED is informed and

believes that defendant Won Sik Im is continuing to advertise using DIRECTED's registered trademarks.

32. DIRECTED is informed and believes that defendant Won Sik Im has falsely represented to the public through advertising with the VIPER® name and/or express oral representations to customers that defendant is authorized by DIRECTED to sell and advertise/or VIPER® products.

33. DIRECTED is informed and believes that defendants advertise and/or display VIPER® vehicle security systems in an effort to attract the public into defendants' business establishments both to sell the public, without DIRECTED's authorization, VIPER® products and/or, even when defendants do not have VIPER® products in inventory, to "bait and switch" the public into buying DIRECTED's competitors' products.

34. DIRECTED is informed and believes that, despite not being an authorized dealer, defendant Won Sik Im has sold and offered for sale VIPER® vehicle security systems to end user customers and/or to distributors.

35. Defendants, and each of them, have sold the VIPER® vehicle security systems uninstalled and, thus, without any knowledge, concern or control as to whether the vehicle security system is ever installed, and, if so, whether the system is installed correctly. DIRECTED is informed and believes that defendant Won Sik Im also may be selling installed VIPER® vehicle security systems, but that the installations are being completed by insufficiently trained personnel, such that the installed alarm may not function properly.

36. Defendants, and each of them, have sold VIPER® vehicle security systems which do not include all of the parts and/or literature which come with the units purchased from DIRECTED's authorized dealers.

37. DIRECTED, through its agent(s), has purchased at least one uninstalled VIPER® vehicle security system from each of the defendants in the last 12 months, which were missing one or more parts or pieces of literature and which infringe one or more of the above identified patents.

38. The VIPER® units purchased by DIRECTED from defendant Sound Master, Inc. and defendant Won Sik Im doing business as K.J. Stereo and doing business as C-Tech Electronics

Wholesale did not have a serial number attached to the module case as would be present in a product received from DIRECTED or one of DIRECTED's authorized dealer selling an installed product. The serial number, which is printed on a sticker and affixed to the module case by DIRECTED at the time of manufacture, was torn off. The lack of a serial number alone prevents a customer from being able to register the product for warranty coverage.

39. DIRECTED is informed and believes that defendants know or by the exercise of reasonable care should know that DIRECTED sells its VIPER® vehicle security systems through authorized dealers only. This fact is generally known in the car alarm resale industry. Further, defendant Sound Master, Inc., through its president defendant Won Sik Im, has executed an authorized dealer agreement containing the sale restrictions. And, DIRECTED expressly informed defendant Won Sik Im doing business as C-Tech Electronics Wholesale by letter in 1996 and 1998 that DIRECTED's products, including the VIPER® vehicle security systems are sold only through authorized dealers and only to end users in an installed condition. In its letters, DIRECTED demands that defendant Won Sik Im stop selling its products and/or using its registered trademarks to promote the sale of products. DIRECTED is informed and believes that defendant has refused to stop his improper activities and continues to use DIRECTED's registered trademarks and sell its products without DIRECTED's authority or consent. True and correct copies of the cease and desist letters sent to defendant are attached hereto as Exhibit K.

40. DIRECTED is informed and believes that defendants are required, pursuant to California Business and Professions Code sections 9800 *et seq.* ("Electronic and Appliance Repair Dealer Registration Law"), to register with the State of California as an electronic and appliance repair dealer as defendants are installing or holding himself/itself out to the public as offering services in the installation, repairing, servicing and/or maintaining vehicle security systems. DIRECTED is informed and believes that defendants have not done so or that defendants' registrations are no longer active.

41. The unauthorized promotion and/or sale of DIRECTED's VIPER® vehicle security systems by defendants, their failure to include all original parts and literature in the VIPER® products they sell and offer for sale, their failure to maintain control over the quality of the

SDILIB1-DAQ
313972.01
(6Q9G01!.DOC)

installation of the system, and their use of DIRECTED's registered trademarks and patented materials without DIRECTED's authorization or consent, have caused damage to DIRECTED's reputation and goodwill and to the value of DIRECTED's VIPER®, DEI®, snake image and other trademarks and its patents.

First Cause of Action
Federal Patent Infringement (Against All Defendants)
35 U.S.C. Section 271

42. DIRECTED refers to and incorporates herein by reference paragraphs 1 through 41 of this Complaint as though set forth in full herein.

43. DIRECTED sells its VIPER® vehicle security systems only through authorized dealers who have entered into a written agreement with DIRECTED which expressly prohibits the authorized dealer from reselling VIPER® products to anyone other than the end user in an installed condition. DIRECTED is informed and believes that the terms and conditions of DIRECTED's authorized dealer agreements, including the resale restrictions, are known in the car alarm retail industry and are or should in the exercise of reasonable care be known to defendants. A true and correct copy of DIRECTED's authorized dealer agreement with defendant Sound Master, Inc. is incorporated herein by reference and attached hereto as Exhibit L.

44. Defendants have infringed and are believed to be directly infringing, literally or under the doctrine of equivalents, Patent Nos. 4,584,569 (motion sensitive security system); Des. 345,711 (vehicle alarm case module); 5,532,670 (method of indicating threat); and 5,646,591 (advanced method of indicating threat), within the United States in violation of 35 U.S.C. section 271(a) by selling and/or offering for sale within this judicial district, without license from DIRECTED, products which incorporate and utilize the inventions and/or designs claimed in the patents listed previously in this paragraph.

45. DIRECTED is informed and believes that defendants have contributed to and are contributing to the infringement of Patent Nos. 4,584,569 (motion sensitive security system); Des. 345,711 (vehicle alarm case module); 5,532,670 (method of indicating threat); and 5,646,591 (advanced method of indicating threat) in violation of 35 U.S.C. section 271(c). DIRECTED is informed and believes that defendants have induced and are continuing to induce one or more of

DIRECTED's authorized dealers and/or end users to infringe the patents listed previously in this paragraph in violation of 35 U.S.C. § 271(b).

46. DIRECTED has no adequate remedy at law and is, therefore, entitled to a preliminary and permanent injunction prohibiting further infringement by defendants.

47. Defendants' infringing activities have been and are willful and deliberate. DIRECTED is entitled to recover treble damages pursuant to 35 U.S.C. section 284, reasonable attorneys' fees and expenses of litigation pursuant to 35 U.S.C. section 285, and prejudgment interest pursuant to 35 U.S.C. section 284.

48. As a result of defendants' infringing activities, DIRECTED has been damaged in an amount to be proved at trial, but believed to be in excess of $20,000. At a minimum, DIRECTED is entitled to recover a reasonable royalty for the acts of infringement by defendants.

Second Cause of Action
Federal Trademark Infringement (Against Defendant Won Sik Im)
15 U.S.C. Section 1114

49. DIRECTED refers to and incorporates herein by reference paragraphs 1 through 48 of this Complaint as though set forth in full herein.

50. Defendant has been using, in interstate commerce, DIRECTED's registered trademarks, including VIPER®, DEI®, NO ONE DARES COME CLOSE®, module case design and/or the snake image, without DIRECTED's consent, in connection with the sale, offering for sale, distribution and/or advertising of vehicle security systems, including the unauthorized sale and offering for sale of vehicle security systems manufactured by DIRECTED.

51. The use of DIRECTED's trademarks in connection with the promotion, sale, offering for sale and advertising of vehicle security systems by defendant likely causes confusion, mistake and/or deception, and has caused confusion, mistake and/or deception, in that such use is likely to, and does, deceive the public into believing that there is an association between DIRECTED and defendant, that the VIPER® product the consumer purchases is a complete product with all of its component parts and literature, that the control DIRECTED exercises over the quality of the installation of a VIPER® vehicle security system is being exercised in connection with the purchase and installation of such a security system from defendant, and that DIRECTED's standard

warranties and guarantees apply, when in fact there is no such association, there is no quality control of the product by defendant, there is no such exercise of control by DIRECTED over the installation of the vehicle security system, and DIRECTED's limited lifetime warranty does not apply.

52. To further the confusion, mistake and/or deception caused by defendant's unauthorized use of DIRECTED's registered trademarks, DIRECTED is informed and believes that defendant informs customers that he is a DIRECTED authorized dealer and/or when selling VIPER® products includes therewith DIRECTED's standard limited lifetime warranty. In fact, the limited lifetime warranty is not applicable because the product is not being sold and/or installed by a DIRECTED authorized dealer.

53. Defendant's unauthorized use of DIRECTED's trademarks, and the unauthorized advertising and sale of DIRECTED's VIPER® vehicle security systems constitutes unlawful infringement of DIRECTED's VIPER®, snake image and other trademarks under the Lanham Act, 15 U.S.C. section 1114.

54. Defendant's acts herein alleged were willful, entitling DIRECTED to recover defendant's profits, damages sustained by DIRECTED, treble damages and costs.

55. As a result of defendant's improper and unauthorized activities, DIRECTED has suffered, and will continue to suffer damages in an amount to be proved at trial, but believed to be in excess of $20,000.

56. DIRECTED has incurred and will continue to incur attorneys' fees in the prosecution of this action and is entitled to recover such fees pursuant to 15 U.S.C. section 1117(a).

57. Unless and until this Court restrains and enjoins defendant from using DIRECTED's trademarks and from selling, offering for sale and advertising DIRECTED's VIPER® vehicle security systems, defendant will continue its unauthorized and improper activities.

Third Cause of Action
Federal Unfair Competition/False Designation of Origin (Against All Defendants)
15 U.S.C. Section 1125(a)

58. DIRECTED refers to and incorporates herein by reference paragraphs 1 through 57 of this Complaint as though set forth in full herein.

59. Defendant Won Sik Im's unauthorized use of DIRECTED's trademarks and patented technology, and/or defendant's express or implied misrepresentations concerning his affiliation with DIRECTED, the quality or lack of installation of the VIPER® vehicle security systems he sells, and/or the applicability of DIRECTED's limited lifetime warranty in connection with the promotion, offering for sale and sale of vehicle security systems, constitutes a false designation of origin and/or false and misleading representations, works and symbols in violation of section 43(a) of the Lanham Act, 15 U.S.C. section 1125(a).

60. Defendant Sound Master, Inc.'s use of DIRECTED's patented technology in violation of defendant's dealer agreement and implied or express misrepresentations regarding the applicability of DIRECTED's limited lifetime warranty in connection with the promotion, offering for sale and sale of uninstalled vehicle security systems, constitute false and misleading representations, works and symbols in violation of section 43(a) of the Lanham Act, 15 U.S.C. section 1125(a).

61. DIRECTED's VIPER® product external packaging and control module case are inherently distinctive and/or have acquired secondary meaning prior to defendants' acts alleged herein. The design of the packaging and the module case are nonfunctional. Defendants' use of DIRECTED's external packaging and/or control module case is likely to confuse the public into believing that an association exists between defendants and DIRECTED and/or that defendants' sale of the VIPER® product in an uninstalled condition is permitted by DIRECTED. Defendants' unauthorized use of DIRECTED's trade dress is a violation of section 43(a) of the Lanham Act, 15 U.S.C. section 1125(a).

62. As a result of defendants' improper and unauthorized activities, DIRECTED has suffered and will suffer damages in an amount to be proved at trial, but believed to be in excess of $20,000.

63. DIRECTED has incurred and will continue to incur attorneys' fees and costs in the prosecution of this lawsuit.

///

///

Fourth Cause of Action
Tortious Interference with Contract (Against Defendant Won Sik Im)

64. DIRECTED refers to and incorporates herein by reference paragraphs 1 through 63 of this Complaint as though set forth in full herein.

65. DIRECTED is informed and believes that defendant knows, or by the exercise of reasonable care should know, that DIRECTED sells VIPER® products only to authorized dealers who are contractually obligated to resell the products in an installed condition, to ultimate consumers, and over whom DIRECTED can exercise control with respect to the content and installation of its VIPER® vehicle security systems. A true and correct copy of DIRECTED's authorized dealer agreement with defendant Sound Master, Inc. is incorporated herein by reference and attached hereto as Exhibit L.

66. DIRECTED is informed and believes that by purchasing VIPER® products for resale from parties other than DIRECTED, defendant intentionally, recklessly, or negligently committed acts designed to cause and encourage the breach of contract by one of more of DIRECTED's authorized dealers.

67. Defendant's sale of VIPER® vehicle security systems, which are not installed by an authorized dealer and which carry no warranty as a result of not being sold and installed by an authorized dealer, in addition to interfering with DIRECTED's contracts with its authorized dealers, will injure the goodwill associated with DIRECTED's VIPER® and related trademarks, and the valuable reputation DIRECTED has developed with respect to vehicle security systems, all to DIRECTED's damage in an amount to be proved at trial but believed to be in excess of $20,000.

68. DIRECTED is informed and believes that each of the acts and omissions by defendant complained of in this cause of action constitutes an act done willfully and with malice, thereby supporting the award of exemplary damages.

Fifth Cause of Action
Unfair Competition/Unfair Business Practices (Against All Defendants)
Cal. Bus. & Prof. Code Section 17200

69. DIRECTED refers to and incorporates herein by reference paragraphs 1 through 68 of this Complaint as though set forth in full herein.

70. Defendants' unauthorized use of DIRECTED's trademarks and infringement of its patents to promote the sale of VIPER® and competing vehicle security systems, and/or defendants' unauthorized sale of DIRECTED's VIPER® vehicle security systems, defendants' representations, express or implied, concerning any affiliation with DIRECTED and any control by DIRECTED over the quality of the product and/or the installation of the VIPER® vehicle security system, and/or defendants' failure to include all original parts and literature in the VIPER® products they advertise, offer for sale and sell, and/or defendants' failure to register pursuant to the Electronic and Appliance Repair Dealer Registration Law, and/or defendants' express or implied representations concerning the applicability of DIRECTED's limited lifetime warranty in connection with the sale of VIPER® vehicle security systems constitute unfair and fraudulent business practices within the meaning of California's Unfair Trade Practices Act, California Business & Professions Code sections 17200 *et. seq.*

71. Defendants' unfair and deceptive business practices have damaged DIRECTED in an amount to be proved at trial, but believed to be in excess of $20,000.

72. Defendants' unfair and deceptive business practices have and will continue to injure DIRECTED, its authorized dealers and the public unless and until they are enjoined by this Court.

Sixth Cause of Action
State False/Misleading Advertisement (Against Defendant Won Sik Im)
Cal. Bus. & Prof. Code Section 17500

73. DIRECTED refers to and incorporates herein by reference paragraphs 1 through 72 of this Complaint as though set forth in full herein.

74. Defendant's use of DIRECTED's trademarks and patented material to sell VIPER® products and/or entice the public into defendant's establishments for the purpose of selling DIRECTED's competitors' products and defendant's false and/or misleading representations, express or implied, that defendant is an authorized VIPER® dealer constitute false and/or misleading advertisement in violation of California Business and Professions Code sections 17500 *et seq.*

75. Defendant's unfair and deceptive business practices have damaged DIRECTED in an amount to be proved at trial, but believed to be in excess of $20,000.

SDILIBLDAQ
313972.01
(6Q9G01!.DOC)

76. Defendant's unfair and deceptive business practices have and will continue to injure DIRECTED, its authorized dealers and the public unless and until they are enjoined by this Court.

Seventh Cause of Action
State Trademark Infringement (Against Defendant Won Sik Im)
Cal. Bus. & Prof. Code Section 14335

77. DIRECTED refers to and incorporates herein by reference paragraphs 1 through 76 of this Complaint as though set forth in full herein.

78. DIRECTED's VIPER®, DEI®, NO ONE DARES COME CLOSE®, and forward facing snake image trademarks are used, among other things, on VIPER® vehicle security system packaging and on displays, banners and miscellaneous merchandise used to promote the sale of DIRECTED products in the State of California.

79. Defendant, without DIRECTED's authority or consent, has used, and continues to use, DIRECTED's registered trademarks for the purpose of enhancing the commercial value of, selling and soliciting the sale of products, merchandise and goods in California, in violation of California Business and Professions Code section 14335.

80. Defendant's acts and omissions will continue unless and until enjoined by this Court.

Eighth Cause of Action
Dilution and Injury to Business Reputation (Against All Defendants)
Cal. Bus. & Prof. Code Section 14330

81. DIRECTED refers to and incorporates herein by reference paragraphs 1 through 80 of this Complaint as though set forth in full herein.

82. DIRECTED's registration under Title 15 of the United States Code and extensive, prominent and continued promotion and use of its VIPER®, DEI®, NO ONE DARES COME CLOSE®, and forward facing snake image trademarks have caused these trademarks to become distinctive in the mind of the public, and have further caused DIRECTED's products, including the high quality of those products, to be distinguished from the products of others.

83. Defendants' unauthorized use of DIRECTED's registered trademarks and/or unauthorized sale of DIRECTED's VIPER® vehicle security systems, dilutes the distinctive quality, and tarnishes the valuable image, of DIRECTED's VIPER® and other trademarks, and,

///

further, creates a likelihood of injury to the business reputation of DIRECTED all in violation of California Business and Professions Code section 14330.

84. Defendants' acts have harmed DIRECTED in an amount to be proved at trial, but believed to be in excess of $20,000.

85. Defendants' acts and omissions will continue unless and until enjoined by this Court.

Ninth Cause of Action
Common Law Unfair Competition (Against All Defendants)

86. DIRECTED refers to and incorporates herein by reference paragraphs 1 through 85 of this Complaint as though set forth in full herein.

87. Defendants have attempted to and have obtained economic benefit from, and have further competed with DIRECTED's authorized dealers acting within the scope of such authorization and taken business away from them, and consequently from DIRECTED, by trading upon the goodwill and reputation that DIRECTED has established through the expenditure of substantial sums of time, effort and money. Defendants have, without authorization, used DIRECTED's registered trademarks and patented material to promote the sale of vehicle security systems, and/or they have used DIRECTED's trademarks and/or VIPER® vehicle security systems to "bait" customers to come in to their stores, and/or they have made misrepresentations to customers with respect to their affiliation and/or association with DIRECTED, and/or they have made misrepresentations to customers regarding the quality of installation of VIPER® vehicle security systems which it has sold, and/or they have made misrepresentations to customers concerning the applicability of DIRECTED's limited lifetime warranty to DIRECTED VIPER® vehicle security systems which they have sold.

88. As a result of the acts and omissions of defendants as alleged herein, DIRECTED has suffered, and will continue to suffer, monetary damages in an amount to be proved at trial, but believed to be in excess of $20,000. Additionally, DIRECTED has incurred, and will incur, further attorney's fees and costs in connection with the prosecution of this lawsuit against defendants.

///

///

89. DIRECTED is informed and believes that each of the acts and omissions by defendants complained of in this cause of action constitutes an act done willfully and with malice, thereby supporting the award of exemplary damages.

Tenth Cause of Action
Breach of Contract (Against Defendant Sound Master, Inc.)

90. DIRECTED refers to and incorporates herein by reference paragraphs 1 through 89 of this Complaint as though set forth in full herein.

91. Defendant Sound Master, Inc. entered into an authorized dealer agreement with DIRECTED which permitted defendant to sell certain lines of DIRECTED's product. The dealer agreement allowed defendant to sell DIRECTED's products only to end users in an installed condition. This is a material provision of the agreement.

92. A true and correct copy of defendant's dealer agreement is attached hereto as Exhibit L and incorporated herein by this reference.

93. Defendant has breached this dealer agreement by selling VIPER® units to distributors and/or to consumers without installation.

94. Based on defendant's breach of the dealer agreement, DIRECTED terminated the agreement. The dealer agreement requires that upon termination, which may be at will and without cause by any party, the dealer must immediately stop selling any previously authorized product and refrain from any conduct which would make it appear that the dealer is an authorized dealer of DIRECTED. DIRECTED is informed and believes that defendant has not complied with this provision. DIRECTED is entitled to an injunction requiring performance of this provision.

95. DIRECTED is informed and believes that defendant is continuing to sell VIPER® products.

96. As a result of defendant's breach of the dealer agreement, DIRECTED has been damaged in an amount to be proved at trial, but believed to be in excess of $20,000.

///

///

///

SDILIB1:DAQ:
313972.01
(6Q9G01!.DOC)

PRAYER

WHEREFORE, DIRECTED prays for relief as follows:

As to the first, second, third, fifth, sixth, seventh, eighth and tenth causes of action:

1. For an injunction enjoining defendants, their officers, agents, affiliates, employees, and those persons in active concert or participation or privity with them who receive actual notice of the order by personal service or otherwise, from infringing DIRECTED's patents, including but not limited to the following: Patent Nos. 4,584,569 (motion sensitive security system); Des. 345,711 (vehicle alarm case module); 5,532,670 (method of indicating threat); and 5,646,591 (advanced method of indicating threat).

2. For an injunction enjoining defendants, their officers, agents, affiliates, employees, and those persons in active concert or participation or privity with them who receive actual notice of the order by personal service or otherwise, from selling or advertising DIRECTED's vehicle security systems, or using DIRECTED's VIPER®, DEI®, NO ONE DARES COME CLOSE®, module case design, and forward facing snake image or other trademarks;

3. For an order requiring defendants to immediately cease all advertising, signs and products containing DIRECTED's VIPER®, DEI®, NO ONE DARES COME CLOSE®, and forward facing snake image trademarks and immediately deliver such items to DIRECTED;

4. For and order requiring defendants to deliver to DIRECTED all VIPER® products within their possession;

5. For an order precluding defendants from using any false designation of origin or false description, including DIRECTED's VIPER®, DEI®, NO ONE DARES COME CLOSE®, and snake image trademarks, that can, or is likely, to lead the consuming public, or individual members thereof, to believe that any product manufactured, distributed or sold by defendants is in any manner associated or connected with DIRECTED, or is sold, licensed, sponsored, approved or authorized by DIRECTED;

6. For a judgment and order that defendants be required to supply plaintiff with a complete record of all transactions, agreement, and other activities involving or connected with the purchase, making, using, or selling of infringing devices or activities;

7. For an order directing defendants to file with the Court and serve upon DIRECTED's counsel within thirty days after entry of the order of injunction, a report setting forth the manner and form in which the defendants have complied with the above specified terms of injunction; and

8. For an order awarding to DIRECTED all of defendants' profits or gains of any kind resulting from defendants' unauthorized sale and/or advertising of DIRECTED's VIPER® products and/or a reasonable royalty for defendants' unauthorized sale and/or advertising of DIRECTED's VIPER® products.

As to all causes of action:

9. For monetary damages in an amount according to proof; and

10. For interest on said damages at the legal rate from and after the date such damages were incurred.

As to the first, second, fourth and ninth causes of action;

11. For punitive and exemplary damages.

As to all causes of action;

12. For costs, including reasonable attorneys fees; and

13. For such other and further relief as the Court deems proper.

DATED: 7-6-00

STEPHEN S. KORNICZKY
KRISTEN E. CAVERLY
BROBECK, PHLEGER & HARRISON LLP

By _____
Stephen S. Korniczky
Attorneys for Plaintiff Directed Electronics, Inc.

DEMAND FOR JURY TRIAL

Plaintiff DIRECTED hereby demands trial by jury.

DATED: 7-6-00

STEPHEN S. KORNICZKY
KRISTEN E. CAVERLY
BROBECK, PHLEGER & HARRISON LLP

By _____
Stephen S. Korniczky
Attorneys for Plaintiff Directed Electronics, Inc.

SDILIB1 DAQ
313972 01
(6Q9G01!.DOC)

TABLE OF EXHIBITS

Exhibit No.	Description	Page No.
A	United States Trademark Registration No. (VIPER®)	22B
B	United States Trademark Registration No. 1,822,608 issued on February 22, 1994 (Forward Facing Snake Image)	23
C	United States Trademark Registration No. 1,873,747 issued on January 17, 1995 (DEI®)	24
D	United States Trademark Registration No. 2,218,082 issued on January 19, 1999 (Module Case Line Decoration)	25
E	United States Trademark Registration No. 1,848,176 issued on August 2, 1994 (NO ONE DARES COME CLOSE®)	26
F	United States Patent No. Des. 345,711 issued April 5, 1994 (Vehicle Alarm Case Module)	27
G	United States Patent No. 4,584,569 issued April 22, 1986 (Motion Sensitive Security System)	29
H	United States Patent No. 5,532,670 issued July 2, 1996 (Method of Indicating the Threat Level of an Incoming Shock to an Electronically Secured Vehicle and Apparatus Therefore)	45
I	United States Patent No. 5,646,591 issued July 8, 1997. (Advanced Method of Indicating Incoming Threat Level to an Electronically Secured Vehicle and Apparatus Therefor [sic])	59
J	Limited Lifetime Consumer Warranty	90
K	Cease and Desist Letter(s)	92
L	Dealer Agreement	105


BLUEBIRD
TEL (888) 477-0700
www.bluebirdonline.com

Int. Cl.: 12

Prior U.S. Cls.: 19 and 21

Reg. No. 1,756,693

United States Patent and Trademark Office Registered Mar. 9, 1993

TRADEMARK
PRINCIPAL REGISTER

VIPER

DIRECTED ELECTRONICS, INC. (CALIFORNIA CORPORATION)
1413 LINDA VISTA DRIVE
SAN MARCOS, CA 92069

FOR: VEHICULAR ANTI-THEFT AND SECURITY SYSTEMS; NAMELY, REMOTELY ACTUATED, ELECTRONICALLY-ENERGIZED SECURITY HARDWARE COMPRISING DOOR LOCKS, ACTUATORS, AUDIBLE ALARMS AND PARTS THEREFOR, IN CLASS 12 (U.S. CLS. 19 AND 21).

FIRST USE 11-9-1984; IN COMMERCE 11-9-1984.

SER. NO. 73-775,611, FILED 1-23-1989.

G. T. GLYNN, EXAMINING ATTORNEY

EXHIBIT A PAGE 22B

Int. Cl.: 12

Prior U.S. Cls.: 19 and 21

United States Patent and Trademark Office

Reg. No. 1,822,608
Registered Feb. 22, 1994

TRADEMARK
PRINCIPAL REGISTER

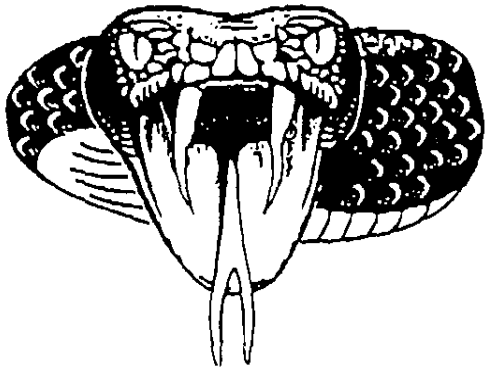

DIRECTED ELECTRONICS, INC. (CALIFORNIA CORPORATION)
2560 PROGRESS STREET
VISTA, CA 92083

FOR: AUTOMOTIVE ANTI-THEFT SYSTEMS COMPRISING ELECTRONIC SENSORS, ELECTRONIC PAIN GENERATORS, ELECTRONIC SIRENS, REMOTE CONTROL TRANSMITTERS REMOTE CONTROL RECEIVERS, SOLD AS A UNIT, AND SOLD THROUGH MAIL ORDER, RETAIL STORES AND BY AUTOMOTIVE SECURITY INSTALLERS, IN CLASS 12 (U.S. CLS. 19 AND 21).

FIRST USE 5-8-1988; IN COMMERCE 6-8-1988.

SER. NO. 74-385,813, FILED 5-3-1993.

RICHARD A. STRASER, EXAMINING ATTORNEY


BLUEBIRD
TEL (888) 477 0700
www.bluebirdonline.com

05/24/00 WED 15:14 FAX 760 5991589 D E I 003

Int. Cl.: 12

Prior U.S. Cls.: 19 and 21

United States Patent and Trademark Office

Reg. No. 1,873,747
Registered Jan. 17, 1995

TRADEMARK
PRINCIPAL REGISTER

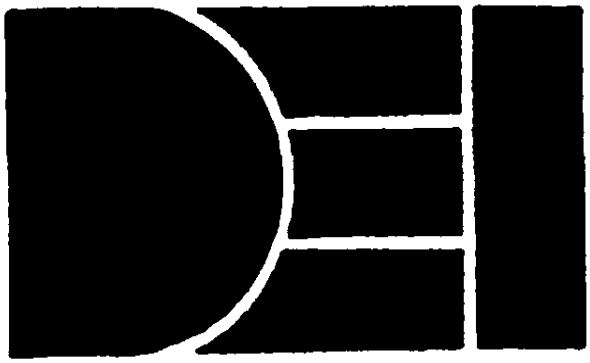

DIRECTED ELECTRONICS, INC. (CALIFORNIA CORPORATION)
2560 PROGRESS STREET
VISTA, CA 92083

FOR: ANTI-THEFT ALARMS FOR VEHICLES, IN CLASS 12 (U.S. CLS. 19 AND 21).

FIRST USE 6-0-1989; IN COMMERCE 6-0-1989.

SER. NO. 74-348,752, FILED 1-15-1993.

ANTHONY R. MASIELLO, EXAMINING ATTORNEY


BLUEBIRD
TEL 1888 477 0700
www.bluebirdonline.com

Int. Cl.: 12

Prior U.S. Cls.: 19, 21, 23, 31, 35 and 44

Reg. No. 2,218,082

United States Patent and Trademark Office

Registered Jan. 19, 1999

TRADEMARK
PRINCIPAL REGISTER

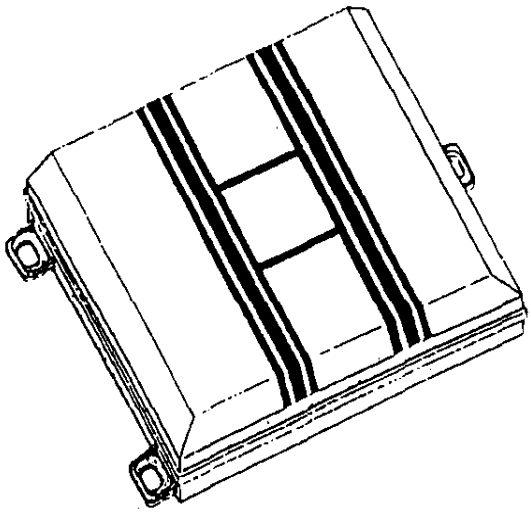

DIRECTED ELECTRONICS, INC. (CALIFORNIA CORPORATION)
2560 PROGRESS STREET
VISTA, CA 92083

FOR: ANTI-THEFT ALARMS FOR VEHICLES; ANTI-THEFT ALARM SYSTEMS COMPRISING ELECTRONIC SENSORS, SIRENS, REMOTE CONTROL TRANSMITTERS, RECEIVERS AND PARTS FOR THE SAME, SOLD SEPARATELY OR AS A UNIT, IN CLASS 12 (U.S. CLS. 19, 21, 23, 31, 35 AND 44).

FIRST USE 1-1-1994; IN COMMERCE 1-1-1994.

GEOMETRIC ARRANGEMENT OF A PARALLEL PAIR OF TRIPLE PARALLEL LINES JOINED BY A PAIR OF PERPENDICULAR LINES.

SER. NO. 75-185,035, FILED 10-17-1996.

MATTHEW KLINE, EXAMINING ATTORNEY

EXHIBIT D PAGE 25

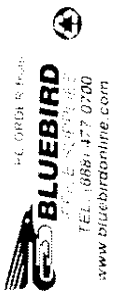
BLUEBIRD
www.bluebirdonline.com

Int. Cl.: 12

Prior U.S. Cls.: 19 and 21

United States Patent and Trademark Office

Reg. No. 1,848,176
Registered Aug. 2, 1994

TRADEMARK
PRINCIPAL REGISTER

NO ONE DARES COME CLOSE

DIRECTED ELECTRONICS, INC. (CALIFORNIA CORPORATION)
2560 PROGRESS STREET
VISTA, CA 92083

FOR: ANTI-THEFT AUTOMOTIVE DEVICES; NAMELY, AUTOMOTIVE ANTI-THEFT ALARMS, ELECTRONIC SENSORS, ELECTRONIC SIRENS, REMOTE CONTROL TRANSMITTERS AND RECEIVERS AND PARTS FOR THE ALARM AND SIREN ONLY SOLD AS A UNIT AND SOLD THROUGH AUTOMOTIVE SECURITY INSTALLERS, IN CLASS 12 (U.S. CLS. 19 AND 21).

FIRST USE 1-24-1986; IN COMMERCE 1-24-1986.

SN 74-337,339, FILED 12-7-1992.

RICHARD A. STRASER, EXAMINING ATTORNEY


BLUEBIRD
www.bluebirdonline.com

US00D345711S

United States Patent [19]

Issa

[11] Patent Number: Des. 345,711

[45] Date of Patent: ** Apr. 5, 1994

[54] **VEHICLE ALARM CASE MODULE**

[76] Inventor: **Darrell E. Issa**, 1598 Parkview Dr., Vista, Calif. 92083

[**] Term: **14 Years**

[21] Appl. No.: **3,712**

[22] Filed: **Jan. 15, 1993**

[52] U.S. Cl. **D10/106**

[58] **Field of Search** 340/540, 546, 565, 568, 340/571, 572, 573, 574, 541, 542, 584; 116/169; D10/104, 106, 116, 121

[56] ***References Cited***

U.S. PATENT DOCUMENTS

D. 303,223	9/1989	Issa	D10/106
D. 333,633	3/1993	Issa	D10/106
D. 333,634	3/1993	Issa	D10/106
D. 333,996	3/1993	Matt et al.	D10/106

Primary Examiner—Wallace R. Burke

Assistant Examiner—Marcus Jackson

Attorney, Agent, or Firm—John J. Murphey

[57] **CLAIM**

The ornamental design of a vehicle alarm case module, as shown and described.

DESCRIPTION

FIG. 1 is a top plan view of the vehicle alarm case module showing my new design;

FIG. 2 is a bottom plan view of the device showing my new design;

FIG. 3 is a left side elevational view thereof showing the design;

FIG. 4 is a right side elevational view thereof showing my new design;

FIG. 5 is a front elevational view of my new design;

FIG. 6 is a rear elevational view of the vehicle alarm case module; and,

FIG. 7 is a trimetric view thereof showing my new design.

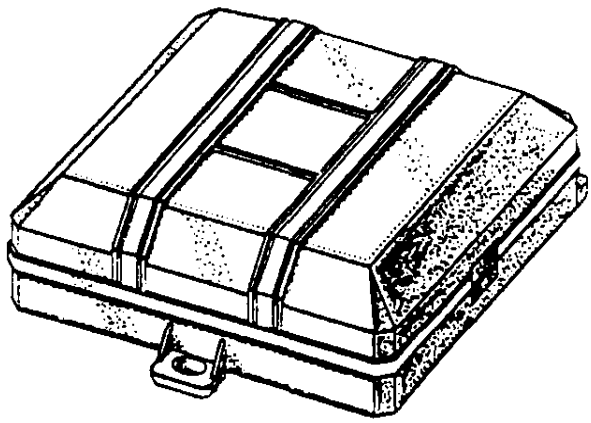

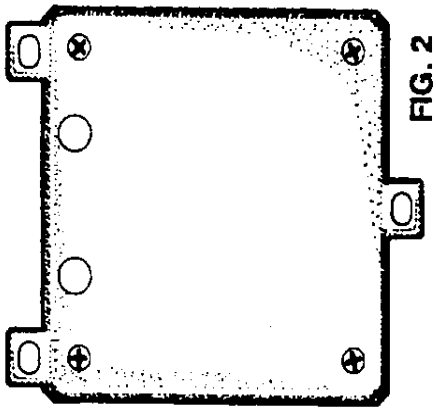

FIG. 2

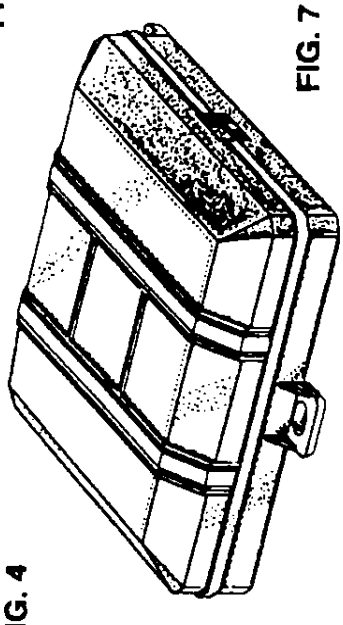

FIG. 7

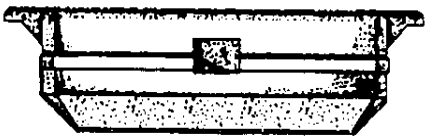

FIG. 4

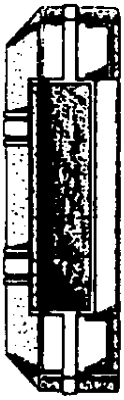

FIG. 6

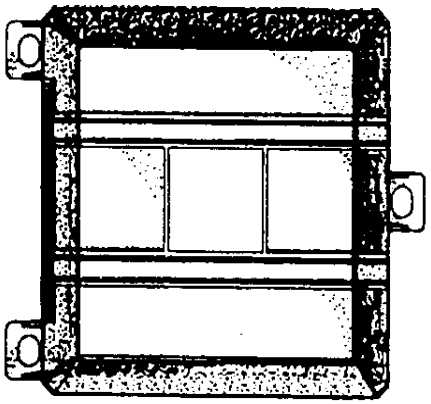

FIG. 1

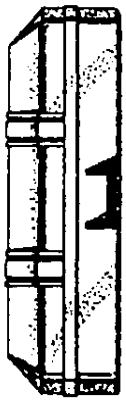

FIG. 5

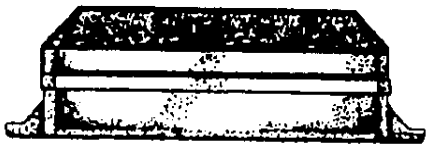

FIG. 3


BLUEBIRD
www.bluebirdonline.com

-/22/86 OR 4,584,569

United States Patent [19]

Lopez et al.

[11] **Patent Number: 4,584,569**

[45] **Date of Patent: Apr. 22, 1986**

[54] **MOTION SENSITIVE SECURITY SYSTEM**

[76] Inventors: **Michael J. Lopez**, 970 Calle Venado, Anaheim, Calif. 92807; **Howard A. Williams, Jr.**, 2629 X. Griset Pl., Santa Ana. Calif. 92704; **Henry J. Salvatori**, 10633 Virginia Ave., Whittier, Calif. 90603

[21] Appl. No.: **650,835**

[22] Filed: **Sep. 17, 1984**

Related U.S. Application Data

[63] Continuation-in-part of Ser. No. 324,170, Nov. 23, 1981, abandoned.

[51] Int. Cl.⁴ G08B 21/00

[52] U.S. Cl. 340/566; 73/650; 73/654; 340/65; 340/571

[58] Field of Search 340/566, 65, 571; 73/654, 650, 658

[56] References Cited

U.S. PATENT DOCUMENTS

4,180,811	12/1979	Yoshimura et al.	340/566
4,234,876	11/1980	Murai	340/566
4,418,337	11/1983	Bader	340/566

Primary Examiner—Glen R. Swann, III

Attorney, Agent, or Firm—Grover A. Frater

[57] ABSTRACT

The preferred arrangement utilizes a magnet suspended at the center of an elastic cord over a pickup coil. Movement of the magnet is sensed by the coil in that signals are generated by such movement. The signals are processed in the combination of a time delay circuit and a comparator to provide an output which is a measure of acceleration of the element on which the elastic cord is mounted and, in one form, by a measure of jerk in a similar time delay circuit and comparator combination.

22 Claims, 6 Drawing Figures

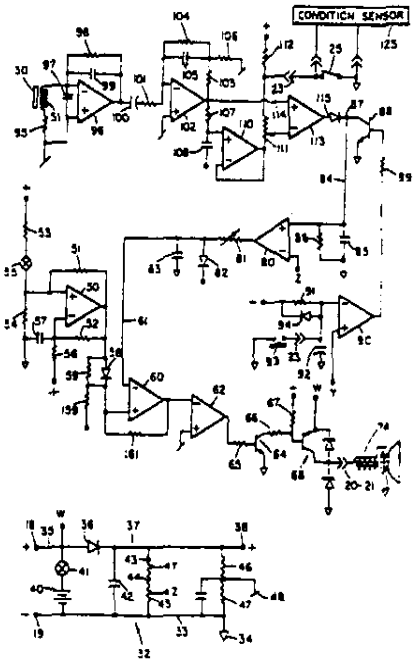

FIG. 1

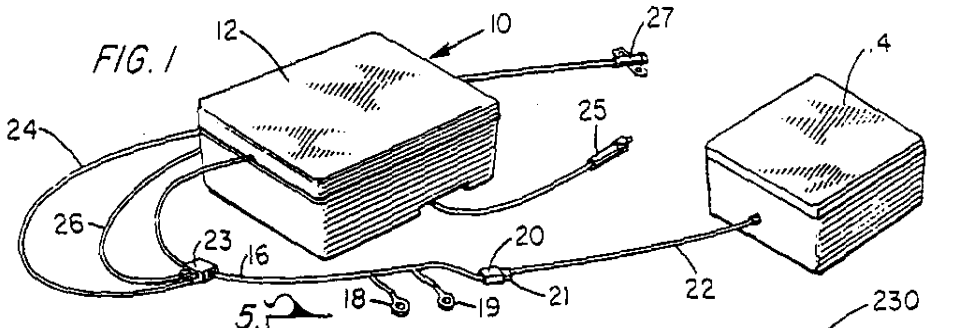

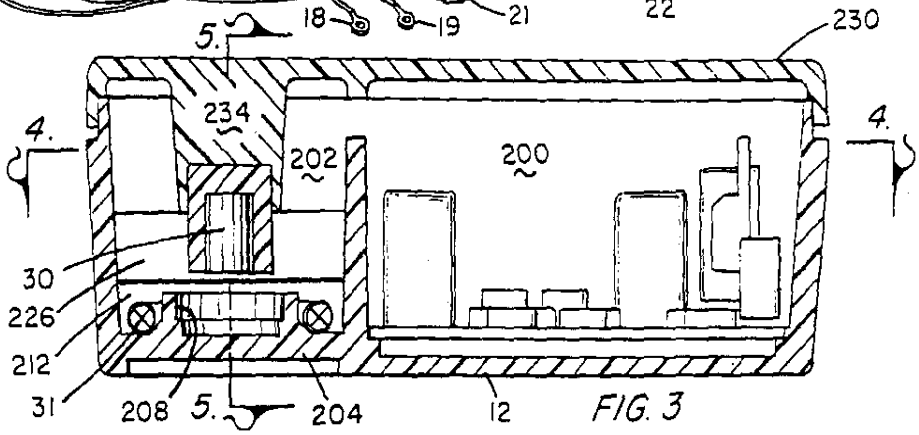

FIG. 3

FIG. 4

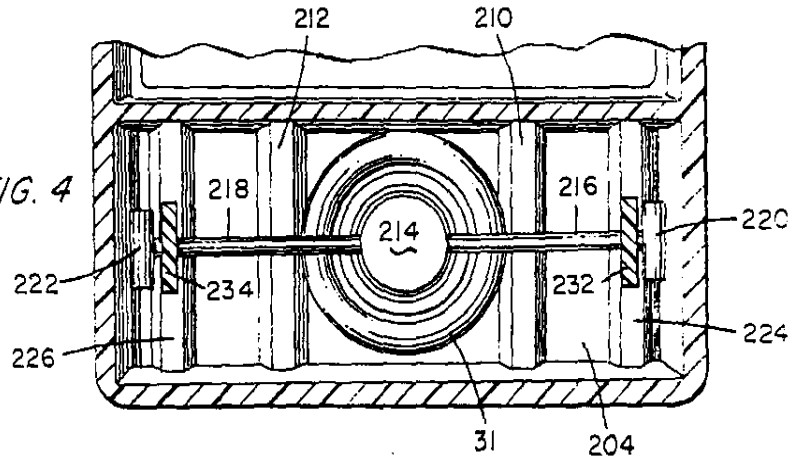

FIG. 5

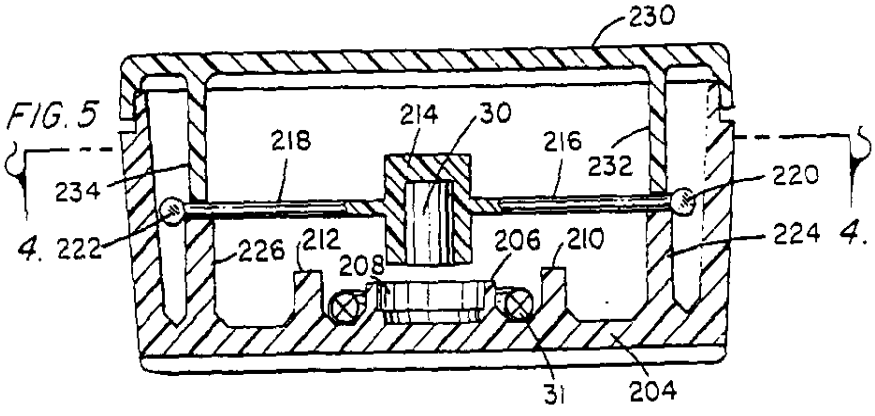

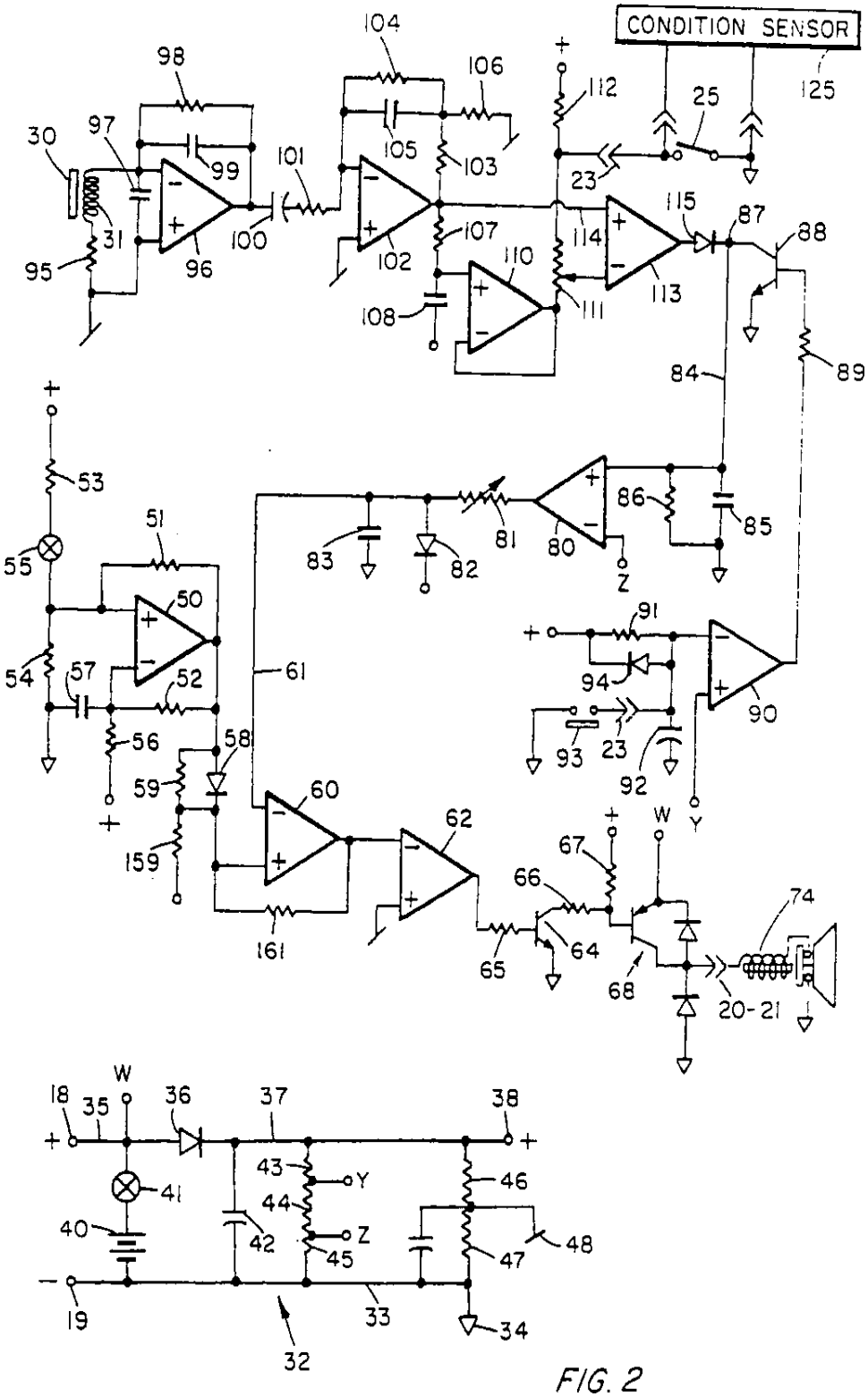
CONDITION SENSOR
125
25
23
112
104
106
105
103
98
97
99
30
31
95
96
100
101
102
107
108
110
111
114
113
115
87
88
89
84
53
55
51
50
54
57
52
56
58
59
159
61
60
62
161
83
82
81
80
86
85
Z
91
94
93
92
90
Y
W
67
66
64
65
68
74
20-21
18
35
36
37
38
41
40
42
43
44
45
46
47
48
19
33
34
32

FIG. 2

FIG. 6

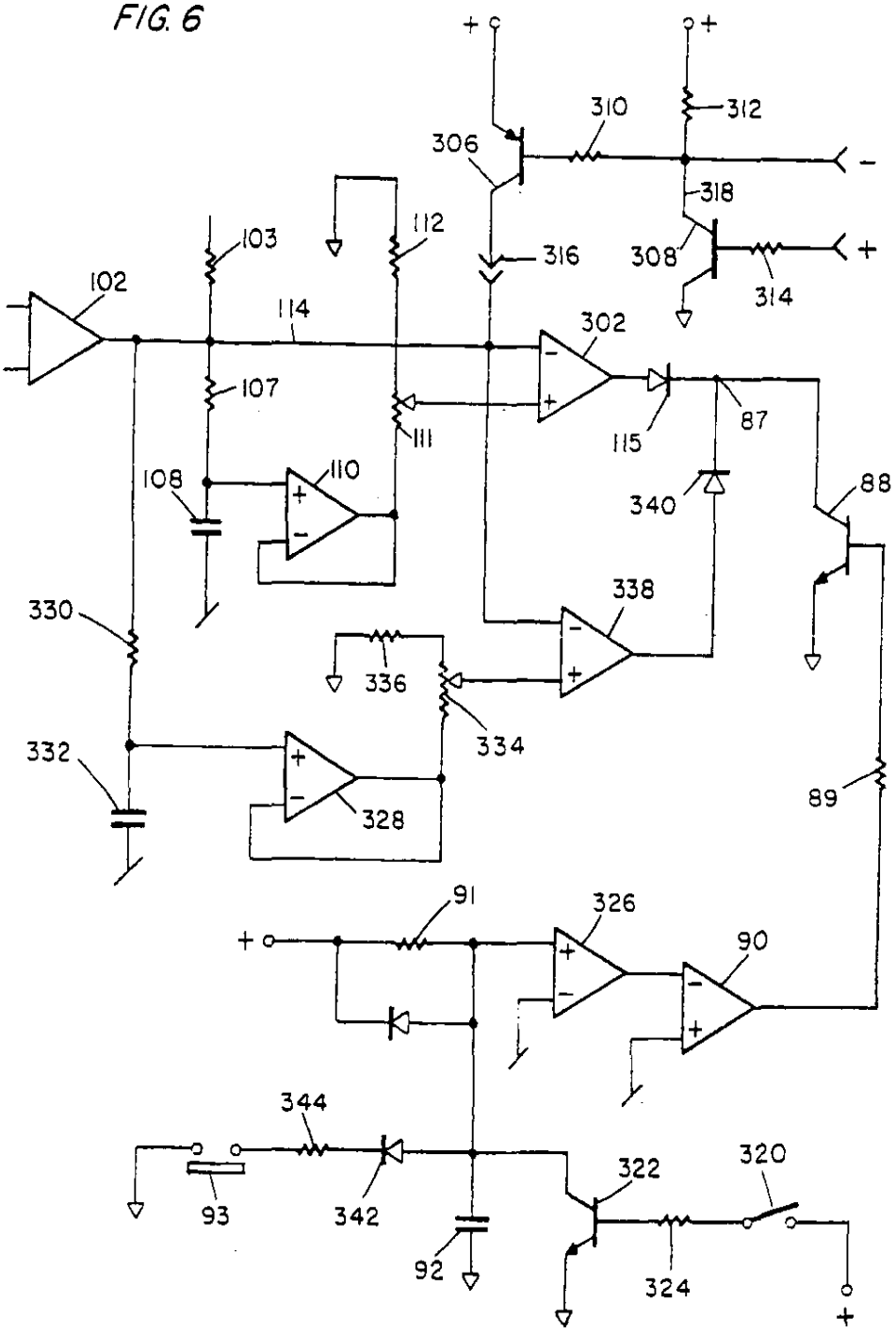
+
+
310
312
306
318
316
308
314
102
103
112
114
302
107
111
115
87
108
110
340
88
330
338
336
334
332
328
89
91
326
90
344
93
342
322
320
92
324
+

MOTION SENSITIVE SECURITY SYSTEM

CROSS-REFERENCE TO RELATED APPLICATION

This application is a continuation-in-part of application Ser. No. 06/324,170, filed Nov. 23, 1981, now abandoned.

TECHNICAL FIELD

This invention relates to security systems generally and to improved motion sensors and improved signal processors for such systems.

BACKGROUND ART

This invention is particularly useful for the antitheft protection of motor vehicle, construction equipment, and other high value apparatus in which a security system can be housed. While not limited thereto the invention is particularly useful for the protection of apparatus which is normally moved from place to place or is fixed to an immovable structure. If the apparatus to be protected against theft cannot be made secure by enclosure or attachment, it is usual practice to attempt to sense the theft or attempted theft and, on that occasion, to initiate some preventive measure. A common preventative is to sound an alarm capable of attracting attention to the theft. The detection of motion is a logical choice when attempting to provide an apparatus which is applicable to the protection of a wide variety of portable apparatus in a multitude of different situations. However, designing a satisfactory motion sensitive security system is complicated by the need to differentiate between authorized and unauthorized movement. There is a need to provide operating power in a way that prevents defeat of the system and, in a truly universal system, there is a need to devise a sensor which is effective without regard to spacial orientation or temperature differences and other physical factors. Prior systems have incorporated features to overcome these and other problems for particular applications. Arming switches, self contained power sources, time delay circuitry, and other means have been employed. In general, however, the inclusion of such features to solve a problem peculiar to one application has rendered the system less useful, or even useless, in other applications. The need remains for a sensor and a system which has wide application, and one purpose of the invention is to satisfy that need.

SUMMARY OF INVENTION

It is an object of this invention to provide an improved motion sensor suitable for sensing motions associated with theft of apparatus. Another object is to provide an improved motion signal processor for security systems. A further object is to provide a security system capable of being arranged to sense motion in intervals in which motion is not authorized and to ignore motion when motion is authorized, is operative without regard to spacial orientation of the sensor, which can be made responsive selectively to motion in any direction, or to a specific motion, which can be used in either a permanent or temporary installation mode, and which has other features directed toward universality.

These and other objects and advantages of the invention which will be made apparent in the description that follows are realized, in part, because of the improved sensor of the invention and, in part, because of its improved signal processor. In preferred form, the sensor comprises a coil adjacent to which a magnet is suspended such that the magnet is freely moved toward and away from the coil, from side to side of the coil in a plane over the coil, and rotationally on an axis which lies in a plane parallel to the coil. The suspension element is a resilient member lying, when relaxed, in a plane parallel to the plane of the coil windings, and, in the preferred form, substantially in the plane containing the center of gravity of the magnet and its mounting structure.

The coil is part of the signal processor. Signals induced in the coil are applied to a band pass amplifier, in the preferred embodiment, whose output is compared in a comparator to a selected standard. Provision is made for altering the standard with a signal such, for example, as might be applied by a switch sensitive to the state of some condition. The comparator output is integrated and is made, at a selected, accumulated signal value, to make energy available for signalling that unauthorized motion has been detected. A timing means terminates the unauthorized motion signal some predetermined time after the integrated signal level falls below a threshold value. Another timer delays integrator operation for a selected time following activation of the system.

The interaction between the several timing circuits, four in the preferred embodiment, is special as is the relation between the timing system and the sensor.

A means is included in the invention for rendering this system inactive for a selected time primarily to avoid sensing motion as an incident to activating the system. In the preferred form that means is proximity sensitive and unauthorized motion is announced by an audible alarm. To make it convenient and effective to use an automotive horn as the sounder, the signal processor includes a means for interrupting horn operation at a frequency in the audible range or below.

The "motion" detecting means in one preferred form of the invention is capable of sensing either or both of acceleration or jerk. Also, that preferred form employs simplified circuitry for arming and disarming the system.

BRIEF DESCRIPTION OF THE DRAWINGS

In the drawings:

FIG. 1 is a perspective view of a system which incorporates the preferred form of the invention;

FIG. 2 is a circuit diagram of the system of FIG. 1;

FIG. 3 is a cross-sectional view, partly schematic, of the sensing and signal processing unit of the system taken on the vertical center plane of the unit;

FIG. 4 is a cross-sectional view of the sensor section of the sensor and signal processing unit taken on line 4—4 of FIG. 3;

FIG. 5 is a cross-sectional view taken on line 5—5 of FIG. 3; and

FIG. 6 is a diagram showing a portion of the circuit of FIG. 2 in an alternate, preferred form.

DESCRIPTION OF THE PREFERRED EMBODIMENT

The system shown in FIG. 1 of the drawing is generally designated 10. It includes an inclosure 12 which houses a sensor and signal processing electronics and is

called the "sensing and signal processing unit." In addition, the system comprises a wiring harness generally designated 16. It extends from the unit 12 and includes connector terminals 18 and 19 for connection to a battery or other source of electrical power. The harness also includes two multiple connector jacks. One of those jacks is numbered 20 and it is interconnected with the plug 21 of a cable 22 that extends to the speaker unit 14. Two plugs are fitted into the other jack 23. One of those plugs is connected by a cable 24 to a spring opened plunger operated switch 25 in parallel with a condition sensor 125. The other plug is connected by a cable 26 to a reed switch 27.

The preferred embodiment includes these several connectors and jacks and plugs so that the system may be readily reconfigured for different applications. If the system is to be permanently installed in an automobile it may be preferred to omit the loud speaker unit 14 and to use the automobile's horn instead. In addition, it may be preferred to omit the battery that is housed in enclosure 12 and instead derive power from the automobile's battery through terminals 18 and 19. The primary sensor utilizes a resilient member and mass combination but, in some cases, particularly in cases of automobiles, it may be desirable to use a mechanically acutated switch to detect some kinds of unauthorized action such, for example, as opening of the automobile's hood or of the automobile's door. That kind of unauthorized action is readily sensed by the plunger switch 25, but a switch of that kind may be unnecessary, and would be omitted, in other situations such, for example, as when the system is attached temporarily to a piece of road building equipment which is to be left on the job site overnight. For an application of that kind it is more convenient to use the internal battery as the power source rather than to attempt to connect the system to the power source of the system of the unit to be protected. Also, in that application the use of the plunger operated motion sensor may be undesirable.

In some applications it is desirable to provide a means for disarming the system at a position known only to the authorized person or persons. In some applications of the system the inclusion of such a switch is desirable. In other applications it might not be needed.

The primary sensor and the signal processing circuitry are packaged so that they can be mounted together at any convenient place within the apparatus to be protected. The sensor responds to acceleration and it is arranged so that it will respond to acceleration in any direction. The sensing apparatus is constructed so that it will sense any acceleration from a very low value to a very large value. The sensitivity of the system is controlled in the signal processing unit and is adjustable to fit the practical circumstance surrounding the application of the system.

Not only will the sensor sense motion in any direction but its response to acceleration is relatively independent of the spacial orientation of the unit 12. That feature is particularly important when the system is moved from one security test to another. Even when it is not as, for example, when permanently mounted in a motor vehicle, the fact that the sensor is omnidirectional permits a wider choice of mounting arrangements.

The preferred form of sensor employs a mass resilient member spring arrangement in which movement of the mass causes movement of a magnet in proximity to a pick-up coil. The coil is located in the field of the magnet which ordinarily forms at least part of the mass so that a voltage is induced in the coil as a consequence of movement of the mass. The value of the mass and the stiffness of the resilient member are selected so that the magnet will be moved in significant degree in response to even very small values of motion. A popular term for such an apparatus is "motion detector." In FIG. 2 the magnet is identified with the reference numeral 30, and the coil is numbered 31.

Signal Processing Circuit

The signal processor of preferred form employs integrated circuit devices that require energization from sources that are both more positive and more negative than intermediate or reference potential. That requirement is met by the power supply circuitry shown in the lower left corner of FIG. 2. The power supply, which is generally designated 32, includes terminals 18 and 19. They are arranged for connection through a main power switch to an external battery the positive side of which is connected to terminal 18 and the negative side of which is connected to terminal 19. Terminal 19 is connected by line 33 to system ground identified by the symbol marked 34. The positive terminal 18 is connected by line 35 to a supply terminal W and to a rectifier 36 the other side of which is connected by line 37 to the positive terminal 38 of the signal processor circuitry. The internal power source is a battery 40 which is connected in series with a switch 41 between lines 35 and 33. Transients in this system are filtered out by a capacitor 42 which is connected between lines 37 and 33. Resistors 43, 44 and 45 are connected in series, in that order, between line 37 and line 33. A power terminal Y is connected to the juncture of resistors 43 and 44, and a power terminal Z is connected to the junction between resistors 44 and 45. A second voltage divider is formed by resistors 46 and 47 which are connected in series, in that order, between lines 37 and 33. The juncture of resistors 46 and 47 is connected to the reference voltage terminal which is numbered 48.

Just above the power circuit 32 of FIG. 2 is an audio oscillator. It includes a comparator 50 whose output is connected by resistor 51 to its positive input and by resistor 52 to its negative input. The positive input of the comparator is connected to the junction of resistors 53 and 54 which are connected to form a voltage divider between the positive line and negative ground. That voltage divider circuit includes a switch 55 which is opened to disable the oscillator when, for example, the speaker or alarm device includes its own modulator or is not to be modulated.

The negative input of the comparator 50 is connected to the juncture of a resistor 56 and a capacitor 57 which are connected in series from the positive line to ground and together form the frequency control circuit of the oscillator.

The output of the comparator 50 is applied through the parallel combination of diode 58 and resistor 59 to the positive input of a comparator 60 and to the positive line through another resistor 159. A resistor 161 connects the output of the comparator with the positive input. The negative input is connected by a line 61 to a control circuit to be described below. The output of the comparator is also connected to the negative input of a comparator 62 whose positive terminal is connected to the reference line. The output of the latter is connected to the base of a transistor 64 through a resistor 65. The emitter of the transistor is connected to ground voltage and the collector is connected by resistors 66 and 67, in

series, to the positive line. The junction of resistor 66 and resistor 67 is connected to the base of a power transistor 68 whose emitter is connected to the power terminal W and whose collector is connected through the jack and plug set 20-21 to the output sounding device 74. A pair of diodes, one connected across the emitter and collector of transistor 68 and the other connected from its collector to circuit ground, protect the transistor.

The oscillator and amplifier are operative only when the output of comparator 80 is applied through the adjustable resistor 81 to line 61 to apply a positive signal to the negative input terminal of the comparator 60. A diode 82 is connected between line 61 and the positive terminal, and the capacitor 83 is connected between line 61 and circuit ground.

The negative input of comparator 80 is connected to the power terminal Z between resistors 44 and 45 of the power circuit 32. The positive input of comparator 80 is connected to line 84. A timing circuit formed by the parallel combination of a capacitor 85 and a resistor 86 are connected between line 84 and ground. Line 84 extends to a junction 87. That junction is connected to the collector of a transistor 88 whose emitter is connected to circuit ground and whose base is connected through a resistor 89 to the output of a comparator 90 whose positive terminal is connected to the power terminal Y between resistors 43 and 44 of the first described voltage divider network in power circuit 32. The negative terminal of comparator 90 is connected to the junction of resistor 91 and capacitor 92 which are connected in series, in that order, between the positive line and ground. The resistor and capacitor form a timing circuit. Provision is made for rendering that circuit inoperative by shorting the capacitor. The shorting circuit is formed in parallel with the capacitor and it includes the normally open reed switch 93 and the connector 23 of the wiring harness.

At the upper left in FIG. 2 coil 31 is disposed within the magnetic field of magnet 30. The coil is connected in series with a resistor 95 between the negative input terminal and the positive input terminal of an amplifier 96. The positive terminal of the circuit is connected to the reference potential line of the system, and a capacitor 97 is connected in parallel with the combination of coil 31 and resistor 95. The output of the amplifier 96 is connected by the parallel combination of a resistor 98 and a capacitor 99 to the negative input terminal of amplifier 96. In addition, the output of amplifier 96 is connected through a coupling capacitor 100 and a series resistor 101 to the negative input terminal of an amplifier 102 whose positive input is connected to the reference potential line. The output of amplifier 102 is connected by the series combination of a resistor 103 and a parallel circuit consisting of resistor 104 and capacitor 105 to the negative input terminal of the amplifier 102. The junction between the resistor 103 and the parallel circuit is connected by a resistor 106 to the reference potential line. In addition, the output of amplifier 102 is connected to one end of a series circuit formed by resistor 107 and capacitor 108 between the output of amplifier 102 and the reference potential line, in that order. The junction between resistor 107 and capacitor 108 is connected to the positive input terminal of amplifier 110 whose negative input terminal is connected to the output of that amplifier. The output is also connected through the series combination of a potentiometer 111 and a fixed resistor 112 to the positive line. The junction between the potentiometer and the fixed resistor is connected through the jack and plug set 23 to one side of the normally open plunger switch 25 whose other side is connected to circuit ground. The tap of the potentiometer is connected to the negative input of another comparator 113 whose positive input terminal is connected by line 114 to the output of amplifier 102. The output of comparator 113 is connected through a diode 115 to the junction point 87.

Diode type 1N4001 may be used everywhere where a diode is indicated in the diagram. The several amplifiers and comparators in the circuit are integrated circuit type 324. Appropriate values for the other elements of the circuit are listed in the chart below.

Component Values

	Value
Resistors	
43, 45, 47, 89, 107, 112	27K ohms
44, 59, 101, 81	100K ohms
106	1K ohms
56, 104	1 Meg ohms
46, 51, 52, 53, 54, 67, 98, 103, 111, 112	10K ohms
86, 91	470K ohms
Capacitors	
42, 97, 99, 105, 108	0.1 mfd
57, 83, 85, 92, 100	100 mfd

Operation of the Circuit

The sounder 74 is energized when transistor 68 is turned on. The horn circuit includes a make-and-break switch so that the horn will sound notwithstanding that it is energized from the unidirectional source. Transistor 68 is turned on by the output of current amplifier 62 when comparator 60 is rendered conductive. The comparator 60 is turned on when the voltage across capacitor 83, which is applied to the negative terminal of comparator 60 by line 61, exceeds the potential at the positive input of comparator 60. The potential at the positive terminal is established by the resistive network formed by resistors 56, 52, 59, 159 and 161, and the voltage that is applied to that network from the positive side of the power source, and the output of the comparator 50 which is connected as a multivibrator.

In summary, the sounder 74 will be turned on and off at a rate determined by the multivibrator when the potential across capacitor 83 exceeds some threshold value. Capacitor 83 is charged by comparator 80 through the variable resistor 81 at a rate that is determined by the output potential of the comparator and the value of the resistor. Comparator 80 is turned on to charge the capacitor 83 only when the potential at its positive input exceeds the reference potential Z which is applied to its negative input. The potential across capacitor 83 is equal to the potential at the positive input is equal to the reference potential Z which is connected in parallel with capacitor 85 to form a timing circuit. A means is incorporated in this system for preventing the accumulation of charge on capacitor 85, or for rapidly discharging the capacitor, and in this preferred embodiment that means comprises the transistor 88 whose collector/emitter circuit is connected in parallel with the capacitor. When that transistor is rendered conductive the capacitor is shorted to ground. Conduction is controlled by comparator 90 whose output is applied to the base of transis-

EXHIBIT G PAGE

tor 88. The comparator has its positive input connected to a reference source of positive potential. The negative input is connected to a timing circuit formed by the series combination of resistor 91 and capacitor 92. The output of the comparator 90 will turn the transistor 88 on until the capacitor 92 charges through resistor 91 to a value that exceeds the potential at the positive input of the comparator. As a consequence of that, transistor 88 is turned on and the capacitor 85 is prevented from being charged for an interval following application of power to the circuit until the capacitor 92 has been charged. Closure of the reed switch 93 will discharge capacitor 92 and result in a turn on of comparator 90 to turn on the transistor 88 and prevent capacitor 85 from being charged until the switch 93 is reopened and the capacitor 92 has been charged through resistor 91.

Capacitor 85 is charged by output current from comparator 113 through diode 115 as an incident to detection of motion at coil 31. Motion of the magnet induces a voltage in coil 31 and that voltage is applied across the positive and negative inputs of amplifier 96. The output of amplifier 96 is applied to the input of amplifier 102. The function of the several resistors and capacitors that are associated with amplifiers 96 and 102 is to limit the frequency response of the system to values that correspond to the frequency of voltage variations induced in coil 31 for the kind of motion and acceleration to be detected. In practice, and in this preferred embodiment, the amplifier 102 will provide an output in response to changing input at frequencies below about ten kilo-Hertz. For practical reasons, the circuit is made responsive to frequencies in the range between about eight cycles per second and 160 cycles per second. The output of amplifier 102 is applied directly to the positive input of comparator 113 and is applied to the negative input of that comparator through the combination of current amplifier 110 and a time delay circuit formed by resistor 107 and capacitor 108. Use of the delay circuit results in compensation for any offset in the output of amplifier 102. In the absence of motion the output of amplifier 102 does not change and equal potentials are applied to the inputs of comparator 113. When the output of amplifier 102 is changed the delay in applying the change to the negative terminal will result in input differences that turn on the comparator 113 and result in the charging of capacitor 85.

Summarizing the operation of the system, acceleration is detected by the combination of magnet 30 and coil 31, and results in the charging of capacitor 85. That capacitor having been charged, comparator 80 will apply an output through resistor 81 to capacitor 83. After some time interval, the duration of which can be adjusted by adjustment of the value of resistor 81, capacitor 83 will be charged above a threshold value and will result in comparator 60 and the horn 74 being turned on.

There are applications for the system in which it is desired that the alarm be sounded in response to activity that is most easily sensed with a switch, current sensor or a sensor of some other condition related to a violation of security. Thus, for example, it may be desirable to sound the alarm if the vehicle door or hood or trunk lid is opened whether or not that motion is sensed by the acceleration sensor. The preferred system includes such a switch, numbered 25 in FIG. 1 and connected between ground and the junction between resistors 111 and 112 in FIG. 2. If switch 25 is closed the output of comparator 113 will go high. Capacitor 85, and thus capacitor 83, will become charged and the horn will operate as previously described. A condition sensor 125 in this case a circuit whose output goes low when ignition current flows, is connected in parallel with switch 25.

The system is enabled or disabled by interrupting the power source. The means for interrupting energy from an external power source is not shown in the diagram. The switch 41 is used for interrupting energy supply when the source is internal. When the sensing and signal processing unit is mounted in a relatively inaccessible place the switch 41 would be mounted at a place more conveniently accessible.

There are two ways to disable the unit. One is to open the power supply circuit, and the other is to close the reed switch 93. In preferred form the reed switch is magnetically actuated and is used when it is desired to disable the system for a short period of time. The system is disabled immediately when the switch 93 is closed because closure discharges capacitor 92 and results in the immediate discharge of capacitor 85. Resetting is delayed until capacitor 92 is recharged above the threshold level through resistor 91. The time that the horn continues to be activated following the cessation of motion is determined primarily by the discharge rate of capacitor 85, and that is determined by the combination of the amount of its capacitance and the resistance of resistor 86.

The interrelationship of the several timing circuits to one another and to the motion detector is special. The motion detector has a natural oscillation frequency in each of its several movement modes which lies within the passband of the circuit between coil 31 and capacitor 85. Acceleration or other motion once detected results in oscillation of the magnet (or coil if it is the coil that is resiliently mounted) to provide a signal which continues for some period even if acceleration is limited to a very short interval.

Capacitor 85 of the third timing circuit is charged rapidly once the comparator 113 begins conducting current but only if transistor 88 is turned off. The transistor serves as a short circuit around capacitor 85 until capacitor 92 of the first timing circuit is charged. It begins charging when the system is powered and it charges slowly through resistor 91. Thus, while the sensor and its circuitry are immediately available to charge capacitor 85, charging is delayed to permit powering and enabling the system without sounding the alarm.

While it is charged rapidly from comparator 113, capacitor 85 discharges slowly through resistor 86. As a consequence comparator 80 supplies charging current to capacitor 83 of the second timing circuit over a relatively long period. Capacitor 83 discharges through a different circuit over a longer period. That arrangement of timing circuits insures that system operation is substantially the same in response to actuation of the specific motion detection switch 25 as to acceleration of magnet 30. It permits setting alarm time at resistor 81 independently of system sensitivity which is set at resistor 111, and it delays turn off if the alarm is on when the switch 93 is closed. That latter feature is important because the thief who has set off the alarm and finds switch 93 in his attempt to silence the alarm cannot tell by its actuation that he has found the disabling switch.

The Motion Detector

The motion or acceleration detector is formed by the combination of a magnet and a coil arranged so that relative motion between them results in induction of a potential in the coil. In the preferred embodiment the coil 31 is fixed and the magnet 30 is suspended over it by an elongated resilient member which extends in a plane perpendicular to the plane containing the coil and magnet. In the preferred form the magnet is made cylindrical and is mounted so that the axis of the cylinder is substantially coincident with the axis of the coil. The coil is round and its inside diameter is greater than the diameter of the cylinder. The magnet is suspended so that the magnet face toward the coil does not extend into the coil, and it is mounted in the enclosure so that a majority of the flux lines extending from one end of the magnet to the other are confined within the enclosure and will be unaffected by magnetic structure which are external to the housing such, for example, as magnetic structures on which the housing might be mounted. That arrangement ensures that a substantial number of flux lines will be cut by the pick-up coil 31 as an incident to even small motion of the magnet in any direction. As a consequence, a voltage will be developed in the pick-up coil if the magnet is moved in the direction of its axis toward or away from the coil. A voltage will be generated in the pick-up coil if the magnet is moved so that its axis is displaced in any direction from the axis of the coil, and a voltage will be generated in the coil if the magnet is moved so that its axis is tilted with respect to the axis of the coil. The magnet is suspended by a resilient member in a way that ensures that a number of these possible motions will occur in the event that there is any movement of the magnet relative to the coil. As best shown in FIGS. 4 and 5, the magnet in the preferred embodiment is mounted at a mid-region along the length of an elastic cord which is stretched across the sensor cavity of the housing its ends held in place by clamps which are integrally formed with the housing.

The enclosure 12 is divided into two compartments. One is designated 200 and is the compartment which contains the signal processing electronics and, in some versions of the preferred embodiment, the horn and the power supply battery. The other compartment is identified by the reference numeral 202 and it is the one that contains the sensor. The lower wall of the sensor compartment 202 is numbered 204. Conformations on the inner side of that lower wall define an annular inwardly projecting wall 206 whose axis is perpendicular to the plane of the wall 204.

The coil 31 surrounds that annular wall. Two ribs 210 and 212, respectively, extend across the sensor cavity one on each side of coil 31. Those ribs are integrally formed on the inner surface of the bottom wall.

Together those several conformations protect the coil against being struck by the magnet structure and damp excessive movement of the magnet without limiting the generation of signal voltages.

In this preferred embodiment magnet 30 is lodged in a cylindrical cup 214 which embraces the magnet except at one face, the lower face in FIGS. 3 and 5. The cup 214 is integrally formed with the suspension members which extend from diametric points on the cup wall substantially in the plane of the center of gravity of the magnet and cup assembly. The suspension members are numbered 216 and 218, respectively. They are substantially alike in length and in diameter and in every other characteristic, and each terminates in an enlargement or keeper which, in this form, is substantially cylindrical. The cylindrical end of the arm 216 is numbered 220, and the cylindrical end of the arm 218 is numbered 222. Each arm, adjacent its respective cylindrical end, resides in a notch formed in the upper face of a crossmember that extends across the interior of the sensor section of the housing parallel to the ribs 210 and 212. The rib associated with arm 216 is numbered 224 and the rib associated with arm 218 is numbered 226. Fingers formed on the inner wall of the cover 230 extend downwardly toward ribs 224 and 226, respectively. The finger 232 extends down into engagement with the upper surface of rib 224 on the opposite sides of the notch in which arm 216 is disposed, and at the other side finger 234 extends down and engages the upper surface of rib 226 on opposite sides of the notch in which arm 218 is disposed. In this preferred embodiment each of the arms is twisted three turns each in opposite directions at the time of assembly. The arms are held in place in notches so that they do not become untwisted in the assembly process.

The dimensions of the resilient arms and the weight of the magnet are not critical. However, the natural resonant frequency of the mass and resilient member combination should lie in passband of the signal processer, in this particular case between ten and 150 cycles per second in any orientation of the housing. Beyond that it is only required that the magnet remain suspended in any orientation so that it is free to move from side to side and to rotate about the axis of the arms and to move in the direction of the axis of the coil.

Alternative Signal Processing Unit

Large trucks are attractive objects for thieves not only because of the value of the truck but especially because of the value of their cargos. Protecting them is more difficult than protecting smaller vehicles because many truck designs afford easier access to the engine compartment and electrical system, especially from below. Certain features of the invention, while having general application, are especially useful in the case of large trucks. One of those features is the ability to detect heavy, short time application of forces by detecing jerk as distinguished from acceleration. Forces resulting in acceleration of portions of a vehicle occur in normal use so it is necessary to incorporate delays in security apparatus to permit deactivation of the system for normal use. Those time delays present opportunity for thieves who understand the construction and operation of the system. But long time delays are not required in the case of jerk, and response to jerk removes the possibility of disabling the security system with sharp, impacting blows.

Other improvements and functions are provided in the preferred form of the invention for certain applications. Some of them relate to alternative means for developing input signals to which the system is to respond, and one relates to an alternative arrangement for disabling the system.

The circuit of FIG. 6 illustrates how these added functions and features are achieved by modification of FIG. 2. Only so much of FIG. 2 is incorporated in FIG. 6 as is deemed necessary to illustrate where the changes and additions are to be made in FIG. 2. Reference numerals below 200 in FIG. 6 identify elements found in

FIG. 2. Added elements are identified by reference numerals greater than 300.

In FIG. 2 differential amplifiers 102 and 110 detect motion by measuring a function of acceleration which continues for a period which is compared to the timing circuit formed primarily by resistor 107 and capacitor 108, and has an amplitude which is compared to the voltage level set by potentiometer 111. The acceleration measuring elements of FIG. 6 are the same except that the input connections to the amplitude measuring comparator are reversed. Amplifier 302 of FIG. 6 is like comparator 113 of FIG. 2 except for reversal of input connections. Reversal of the comparator connections requires a change in reference potential because the polarity of the output to diode 115 and junction 87 is to remain the same. The change is accomplished by adjusting potentiometer 111 to change the polarity of the relative difference between input terminals without significant change in the magnitude of difference.

Reversal of comparator inputs simplifies the application of inputs from other external condition sensors. The condition sensor 125 and switch 24 and connector 23, all of which are found in FIG. 2, are replaced in FIG. 6 by transistors 306 and 308, current limiting resistors 310, 312 and 314 and a circuit interconnector 316. One side of the latter is connected to line 114 and the negative input of comparator 302. The other side of the circuit connector is connected to the collector of a transistor 306 whose emitter connects to positive d.c. power potential. The base of PNP transistor 306 is connected through resistor 310 to negative initiating signal line 318. A resistor 312 is connected between line 318 and positive d.c. power potential. The NPN transistor 308 has its emitter connected to the negative side of the d.c. supply and its collector connected to line 318.

In the absence of a negative potential on line 318 or of a positive potential at the base of transistor 308, the base of transistor 306 is positive because there is minimal voltage drop across the resistors 312 and 310. In that case, transistor 306 is turned off and no unbalancing potential is applied by transistor 306 to line 114 and comparator 302. However, if line 114 is made negative by a sensor or switch or the like, either directly or indirectly by turning on transistor 308 with a positive potential at its base, the transistor 306 will be turned on to unbalance comparator 302 and apply a signal to junction point 87. The response of the apparatus to such a signal has already been explained in the description of FIG. 2.

In FIG. 2 the combination of resistor 91 and capacitor 92 acting through comparator 90 and NPN transistor 88 delays enablement of the alarm system for a short time after opening of the reed switch 93.

Using a magnet which is carried on a key ring, a vehicle driver may close the hidden reed switch to discharge capacitor 92 whereby the alarm system is disabled until the capacitor is recharged. In FIG. 6 that portion of the circuit is modified to utilize a set of contacts which form a switch 320, as part of the ignition switch unit, to short circuit the capacitor 92 whenever the vehicle ignition switch is in the "on" position. A diode 342 and a limiting or timing resistor 344 have been added in series with the reed switch 93. The circuit of FIG. 6 assumes that potential at the ignition switch is positive, which is almost universal. That potential is applied by switch 320 to the base of NPN transistor 322 through a limiting resistor 324. The transistor's emitter is connected to system negative as is one side of capacitor 92. The transistor's collector is connected to the other side of the capacitor. The voltage levels at which system activation is achieved is altered to accommodate the transistor characteristics by adding a comparator 326 between the junction of resistor 91 and capacitor 92 on one side and the negative input of comparator 90 on the other. The input terminals of comparator 326 are reversed so the junction between timing resistor 91 and capacitor 92 is connected to the comparator's positive input.

In certain cases it is desirable to have the security system provide an output to a sounder or otherwise in response to impact, or more accurately, jerk, in addition to the response occasioned by acceleration. To accomplish that result the form of the invention depicted in FIG. 6 includes still another integrator or timer coupled to still another amplitude comparator 328. FIG. 6 includes a resistor 330 and a capacitor 332 connected in series in that order from line 114 at the output of comparator 102 to the neutral point of the power supply. The junction between resistor 330 and capacitor 332 connects to the positive input of a comparator whose other input is connected to its output. That output is connected to one end of potentiometer 334. The circuit extends from the output of comparator 328 through the potentiometer resistor 334 and a dropping resistor 336 to the negative side of the d.c. power supply. The potentiometer slider connects to the positive terminal of a comparator 338 whose negative terminal connects to line 114 at the output of comparator 102. The output of comparator 338 is connected through a diode 340 to junction point 87 of FIGS. 2 and 6.

Thus the circuit formed by elements 330, 332, 328, 334, 336, 338 and 340 has the same configuration and is in parallel with the circuit formed by elements 107, 108, 110, 111, 112, 302 and 115. One provides an output in response to relatively low magnitude acceleration which continues for a relatively long period. The other provides an output in response to relatively high magnitude jerk which continues for a much shorter time. The difference in amplitude response is adjusted by relative adjustment of the potentials at the respective positive terminals of comparators 302 and 338 and that is done by adjustment of potentiometer settings. Measurement of duration is accomplished in resistor and capacitor 107 and 108 in the case of acceleration measurement. In one case resistor 107 has the value 1.0 megohm and capacitor 108, 0.1 mfd. In the jerk circuit, resistor 330 is only 220 K ohms and capacitor 332, 0.1 mfd.

Although we have shown and described certain specific embodiments of our invention, we are fully aware that many modifications thereof are possible. Our invention, therefore, is not to be restricted except insofar as is necessitated by the prior art.

We claim:

1. In a security system:

a motion sensor comprising a magnet and a coil disposed in the field of the magnet, one of the magnet and coil being fixed and the other being moveable relative to the fixed one in the direction toward and away therefrom in a first plane, and being moveable relative to the fixed one in a perpendicular plane perpendicular to said first plane and parallel to the plane containing said fixed one, and being moveable rotatably about an axis extending substantially along the intersection of said first plane and said perpendicular plane.

2. The invention defined in claim 1 which further comprises a signal processing means for sensing voltage variations across said coil and for providing an output signal incident to relative movement of said coil and magnet and for providing an output signal.

3. The invention defined in claim 2 in which said signal processing means includes a delay means effective to prevent provision of said output signal for a time following application of power to said system as a function of time.

4. The invention defined in claim 3 in which said signal processing means further comprises second time delay means effective to prevent provision of said output signal for a period following the sensing of motion by said motion sensor which period is independent of the magnitude of the sensed acceleration for magnitudes greater than a given magnitude.

5. The invention defined in claim 4 in which said signal processing means further comprises a third time delay means effective to continue provision of said output signal, once provided, for not less than a predetermined time period.

6. The invention defined in claim 4 in which each of said time delay means comprises a resistor and capacitor combination and in which the charge on the capacitor is changed;

the charge on the capacitor of the second being changed rapidly, provided that the charge on the capacitor of the third timing means is within a predetermined range of charges, upon the sensing of acceleration and returned toward initial value less rapidly.

7. The invention defined in claim 6 in which the charge on the capacitor of the second time delay means is changed in response to sensing of acceleration only during the interval when the charge on the capacitor of said first time delay means is returned toward its charged value.

8. The invention defined in claim 7 which comprises disabling means discharging the capacitor of the third timing circuit.

9. The invention defined in claim 2 in which said signal processing means comprises a comparator having a pair of input terminals each subjected to respectively associated signals as an incident to voltage variation across said coil, the signal applied to one of said input terminals being delayed relative to the time of application to the other input terminal of its associated signal.

10. The invention defined in claim 9 in which said magnet is suspended in the mid-region along the length of a resilient cord.

11. The invention defined in claim 10 in which said resilient cord comprises a pair of arms extending in opposite directions from said magnet, prestressed in torsion and in tension and each arm being fixed relative to said coil at a respectively associated point.

12. The invention defined in claim 1 in which said magnet is suspended in the mid-region along the length of a resilient cord.

13. The invention defined in claim 12 in which said resilient cord comprises a pair of arms extending in opposite directions from said magnet, prestressed in torsion and each arm being fixed relative to said coil at a respectively associated point.

14. The invention defined in claim 13 in which said coil is generally circular and lies, in a plane parallel to a plane containing said arms;

the magnet being mounted for movement along the axis of the coil exteriorly of the coil.

15. In a security system:

sensing means for providing a motion signal in response to motion imparted to an element of the sensing means;

a signal processing means responsive to said motion signal for providing an output signal;

said signal processing means comprising first, second and third time delay circuits the first time delay circuit being connected to delay operation of the second and third time delay circuits and the second time delay circuit being connected to delay provision of said output signal following receipt by said signal processing means of a motion signal for a period determined only by said second time delay circuit;

said third time delay circuit being connected to continue furnishing of said output signal following termination of the motion signal for a period determined, after completion of the operation of said second time delay circuit, only by said third time delay circuit.

16. The invention defined in claim 15 in which said signal processing means includes a sounder and means for applying said output signal to said sounder intermittently.

17. The invention defined in claim 16 in which said third time delay circuit comprises a third delay circuit capacitor connected to have its charge changed rapidly in response to a sensing signal and returned toward initial value more slowly following cessation of said sensing signal; and

in which said second time delay circuit comprises a second delay circuit capacitor whose charge is alter relatively slowly in intervals when the charge on said third delay circuit capacitor differs from initial value by more than a predetermined amount.

18. The invention defined in claim 17 in which the first time delay circuit comprises a first circuit capacitor connected to have its charge changed relatively slowly from an initial value upon the application of power to said signal processing means and connected to prevent alteration of the initial charge on said third circuit capacitor for a period following such application of power.

19. The invention defined in claim 18 which further comprises means in the form of a disabling switch connected to return the charge on said first circuit capacitor rapidly toward the value of charge on said capacitor prior to application of power to said signal processing means.

20. In a security system:

a magnet and a coil disposed in the field of the magnet such that a signal voltage is generated in the coil as an incident to relative movement between the magnet and the coil; and

a signal processor capable of sensing voltage variations across the coil and of providing an output singal, means for providing an output signal, said signal processor comprising first output signal providing means for providing an output signal in response to signal voltages greater than a first given magnitude for a period of first duration;

said processor further comprising second output signal providing means for providing an output signal in response to signal voltages greater than a second given magnitude for a period of second duration;

said first and second output signal providing means each comprising a time delay circuit and an associated comparator connected to compare the current amplitude of said signal voltage with its amplitude at a time prior by the amount of said delay.

21. The invention defined in claim 20 in which one of said first and second output signal providing means has a time delay circuit providing a relatively long delay and is arranged to provide an output signal in response to a voltage signal of some minimum amplitude, and in which the other of said first and second output signal providing means has a time delay circuit providing a relatively short delay and is arranged to provide an output signal in response to a voltage signal having amplitude higher than said minimum amplitude.

22. The invention defined in claim 21 further comprises means for filtering from said signal voltage components which vary in amplitude at frequencies outside the range from eight to one hundred and sixty cycles per second.

* * * * *

REEXAMINATION CERTIFICATE (1309th)

United States Patent [19] [11] **B1 4,584,569**

Lopez et al. [45] Certificate Issued **Jun. 19, 1990**

[54] MOTION SENSITIVE SECURITY SYSTEM

[76] Inventors: Michael J. Lopez, 970 Calle Venado, Anaheim, Calif. 92807; Howard A. Williams, Jr., 2629 X. Griset Pl., Santa Ana, Calif. 92704; Henry J. Salvatori, 10633 Virginia Ave., Whittier, Calif. 90603

Reexamination Request:
No. 90/001,806, Jul. 10, 1989

Reexamination Certificate for:

Patent No.:	4,584,569
Issued:	Apr. 22, 1986
Appl. No.:	650,835
Filed:	Sep. 17, 1984

Related U.S. Application Data

[63] Continuation-in-part of Ser. No. 324,170, Nov. 23, 1981, abandoned.

[51] Int. Cl.[5] G08B 21/00

[52] U.S. Cl. 340/566; 73/650; 73/654; 340/429; 340/571

[58] Field of Search ..... 340/527, 528, 691, 384 E

[56] **References Cited**

U.S. PATENT DOCUMENTS

2,111,643	3/1938	Salvatori	310/25
3,158,831	11/1964	Boyer	310/329
3,197,756	7/1965	Maynard	73/517
3,995,268	11/1976	Ferrari	340/384 E
4,122,437	10/1978	Petersen	340/528
4,180,811	12/1979	Yoshimura et al.	340/566

Primary Examiner—Glen R. Swann, III

[57] **ABSTRACT**

The preferred arrangement utilizes a magnet suspended at the center of an elastic cord over a pickup coil. Movement of the magnet is sensed by the coil in that signals are generated by such movement. The signals are processed in the combination of a time delay circuit and a comparator to provide an output which is a measure of acceleration of the element on which the elastic cord is mounted and, in one form, by a measure of jerk in a similar time delay circuit and comparator combination.

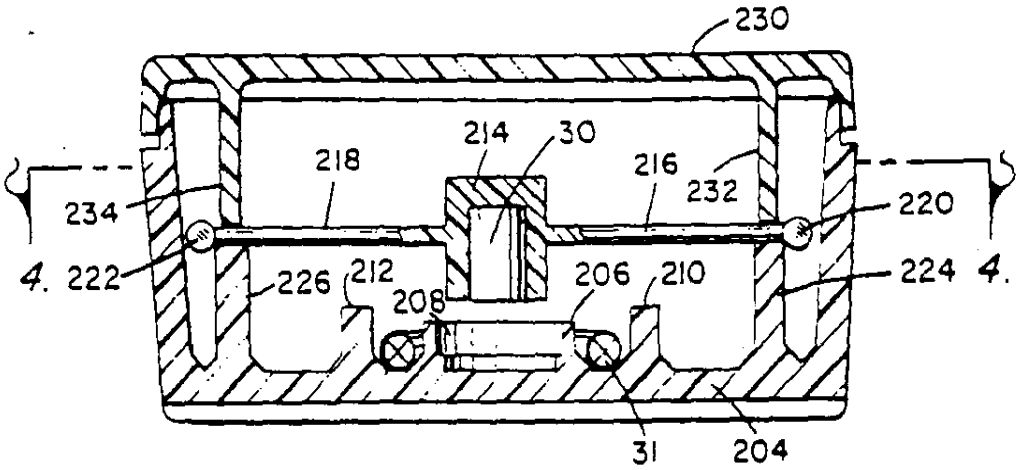

REEXAMINATION CERTIFICATE ISSUED UNDER 35 U.S.C. 307

THE PATENT IS HEREBY AMENDED AS INDICATED BELOW.

Matter enclosed in heavy brackets [ ] appeared in the patent, but has been deleted and is no longer a part of the patent; matter printed in italics indicates additions made to the patent.

AS A RESULT OF REEXAMINATION, IT HAS BEEN DETERMINED THAT:

The patentability of claims 1-14 and 20-22 is confirmed.

Claim 15 is determined to be patentable as amended.

Claims 16-19, dependent on an amended claim, are determined to be patentable.

15. In a security system *as defined by claim 1 wherein said motion sensor provides:*

[sensing means for providing] a motion signal in response to motion imparted to [an element of the sensing means] *said motion sensor;*

a signal processing means responsive to said motion signal for providing an output signal;

said signal processing means comprising first, second and third time delay circuits the first time delay circuit being connected to delay operation of the second and third time delay circuits and the second time delay circuit being connected to delay provision of said output signal following receipt by said signal processing means of a motion signal for a period determined only by said second time delay circuit;

said third time delay circuit being connected to continue furnishing of said output signal following termination of the motion signal for a period determined, after completion of the operation of said third time delay circuit, only by said third time delay circuit.

* * * * *

US004584569B1

REEXAMINATION CERTIFICATE (3818th)

United States Patent [19] [11] B1 4,584,569

Lopez et al. [45] Certificate Issued Jul. 27, 1999

[54] **MOTION SENSITIVE SECURITY SYSTEM**

[75] Inventors: **Michael J. Lopez**, Anaheim; **Howard A. Williams, Jr.**, Santa Ana; **Henry J. Salvatori**, Whittier, all of Calif.

[73] Assignee: **Directed Electronics, Inc.**, Vista, Calif.

Reexamination Request:
No. 90/004,842, Nov. 21, 1997

Reexamination Certificate for:

Patent No.:	**4,584,569**
Issued:	**Apr. 22, 1986**
Appl. No.:	**06/650,835**
Filed:	**Sep. 17, 1984**

Related U.S. Application Data

[63] Continuation-in-part of application No. 06/324,170, Nov. 23, 1981, abandoned.

[51] **Int. Cl.**[6] **G08B 21/00**

[52] **U.S. Cl.** **340/566**; 73/650; 73/654; 340/429; 340/571

[58] **Field of Search** 340/527, 528, 340/529, 530, 566, 429

[56] **References Cited**

U.S. PATENT DOCUMENTS

2,659,065	11/1953	Cordell	340/690
4,162,479	7/1979	Nickell et al.	340/528
4,335,376	6/1982	Marquardt	340/528

FOREIGN PATENT DOCUMENTS

2281609	3/1976	France .
1128733	10/1968	United Kingdom .

OTHER PUBLICATIONS

Kurrelmeyer B. and Mais, W. H., Electricity and Magnetism. D. Van Nordstand Co., Inc., 1967.

Richter, C. F., Elementary Seismology, W. H. Freedman and Company, 1968.

Gurvich, I., Seismic Prospectin, MIR Publishers, 1972.

Plonsey, R. and Collin, R. E., Priciples and Applications of Electromagnetic Fields, McGraw-Hill Book Co., Inc., 1961.

Primary Examiner—Glen R. Swann, III

[57] **ABSTRACT**

The preferred arrangement utilizes a magnet suspended at the center of an elastic cord over a pickup coil. Movement of the magnet is sensed by the coil in that signals are generated by such movement. The signals are processed in the combination of a time delay circuit and a comparator to provide an output which is a measure of acceleration of the element on which the elastic cord is mounted and, in one form, by a measure of jerk in a similar time delay circuit and comparator combination.

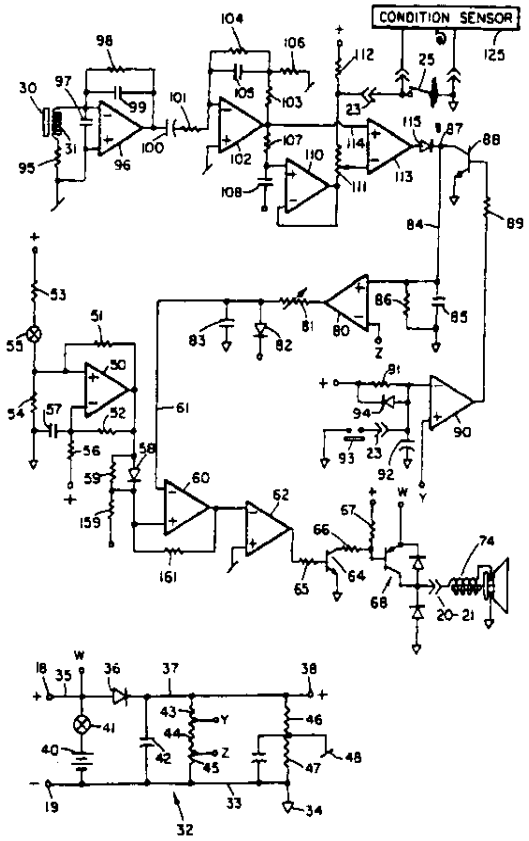

REEXAMINATION CERTIFICATE ISSUED UNDER 35 U.S.C. 307

NO AMENDMENTS HAVE BEEN MADE TO THE PATENT

AS A RESULT OF REEXAMINATION, IT HAS BEEN DETERMINED THAT:

The patentability of claims 1–22 is confirmed.

* * * * *

US005532670A

United States Patent [19]

Issa et al.

[11] Patent Number: 5,532,670

[45] Date of Patent: Jul. 2, 1996

[54] METHOD OF INDICATING THE THREAT LEVEL OF AN INCOMING SHOCK TO AN ELECTRONICALLY SECURED VEHICLE AND APPARATUS THEREFORE

[75] Inventors: Darrell E. Issa, Vista; Jerry W. Birchfield, Escondido, both of Calif.

[73] Assignee: Directed Electronics, Inc., Vista, Calif.

[21] Appl. No.: 112,940

[22] Filed: Aug. 30, 1993

Related U.S. Application Data

[63] Continuation-in-part of Ser. No. 886,871, May 22, 1992, abandoned, and a continuation-in-part of Ser. No. 945,667, Sep. 16, 1992.

[51] Int. Cl.[6] G08B 13/02

[52] U.S. Cl. 340/429; 340/566

[58] Field of Search 340/429, 566

[56] References Cited

U.S. PATENT DOCUMENTS

4,584,569	4/1986	Lopez et al.	340/429
4,866,417	9/1989	DeFino et al.	340/429
5,084,697	1/1992	Hwang	340/566

Primary Examiner—Glen Swann

Attorney, Agent, or Firm—Sam Talpalatsky

[57] ABSTRACT

A method of indicating the threat level of an incoming shock to an electronically secured vehicle and eliminating spurious signals developed from the interaction of EMF and RF energy fields with the shock sensor including the steps of sensing a shock delivered to the vehicle indicative of an attempted intrusion, generating an electric signal the strength of which is proportional to the intensity of the shock, analyzing the signal to determine if it is of a low, generally non-threatening intensity or a higher, generally security-threatening intensity, ignoring the first 5 milliseconds of the signal produced by the shock sensor, ignoring all signals that do not disappear and later reappear, and producing either a first pulse representing a low intensity signal, or separate first and second pulses representing a signal containing both low intensity and higher intensity components.

40 Claims, 6 Drawing Sheets

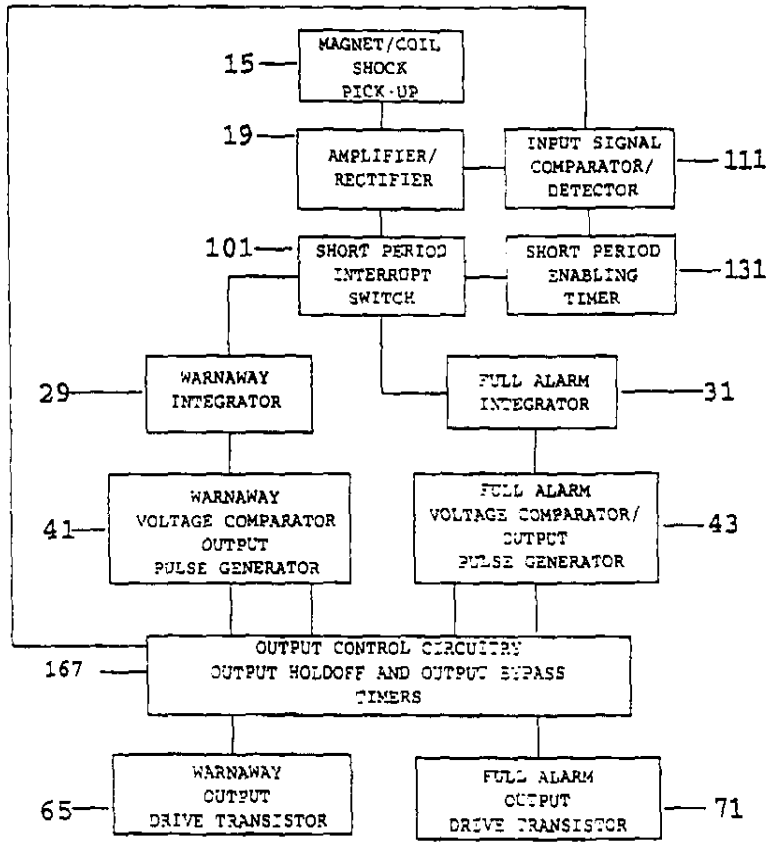

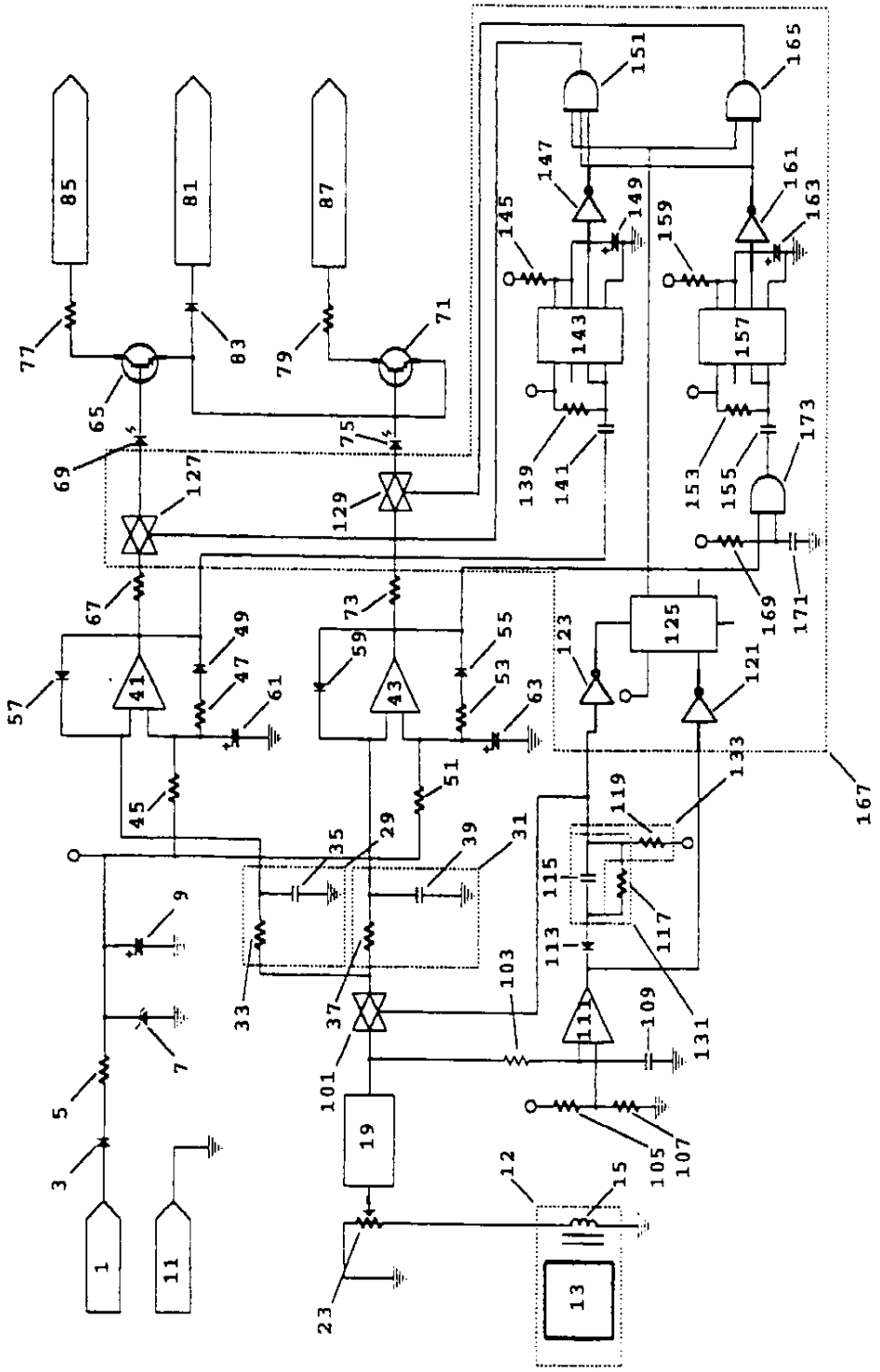

FIGURE 1

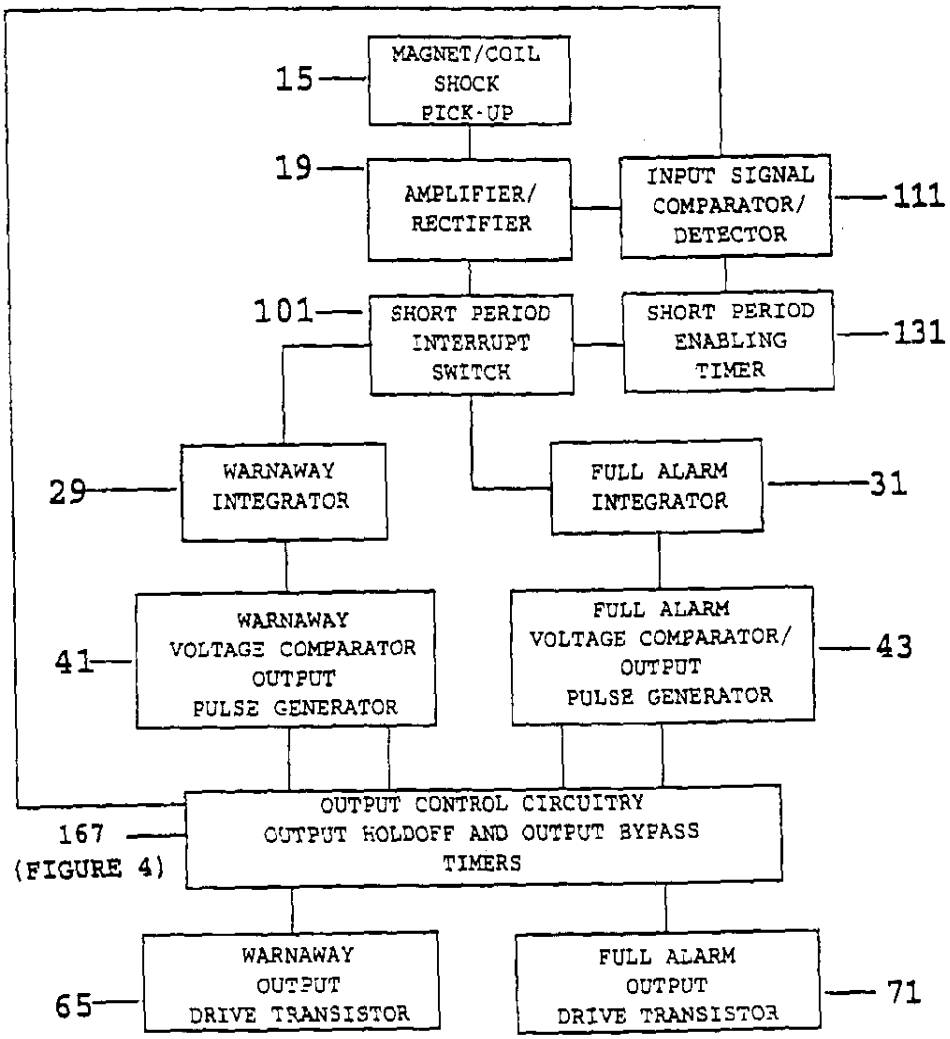
15
MAGNET/COIL SHOCK PICK-UP
19
AMPLIFIER/ RECTIFIER
INPUT SIGNAL COMPARATOR/ DETECTOR
111
101
SHORT PERIOD INTERRUPT SWITCH
SHORT PERIOD ENABLING TIMER
131
29
WARNAWAY INTEGRATOR
FULL ALARM INTEGRATOR
31
41
WARNAWAY VOLTAGE COMPARATOR OUTPUT PULSE GENERATOR
FULL ALARM VOLTAGE COMPARATOR/ OUTPUT PULSE GENERATOR
43
167
(FIGURE 4)
OUTPUT CONTROL CIRCUITRY OUTPUT HOLDOFF AND OUTPUT BYPASS TIMERS
65
WARNAWAY OUTPUT DRIVE TRANSISTOR
FULL ALARM OUTPUT DRIVE TRANSISTOR
71

FIGURE 2

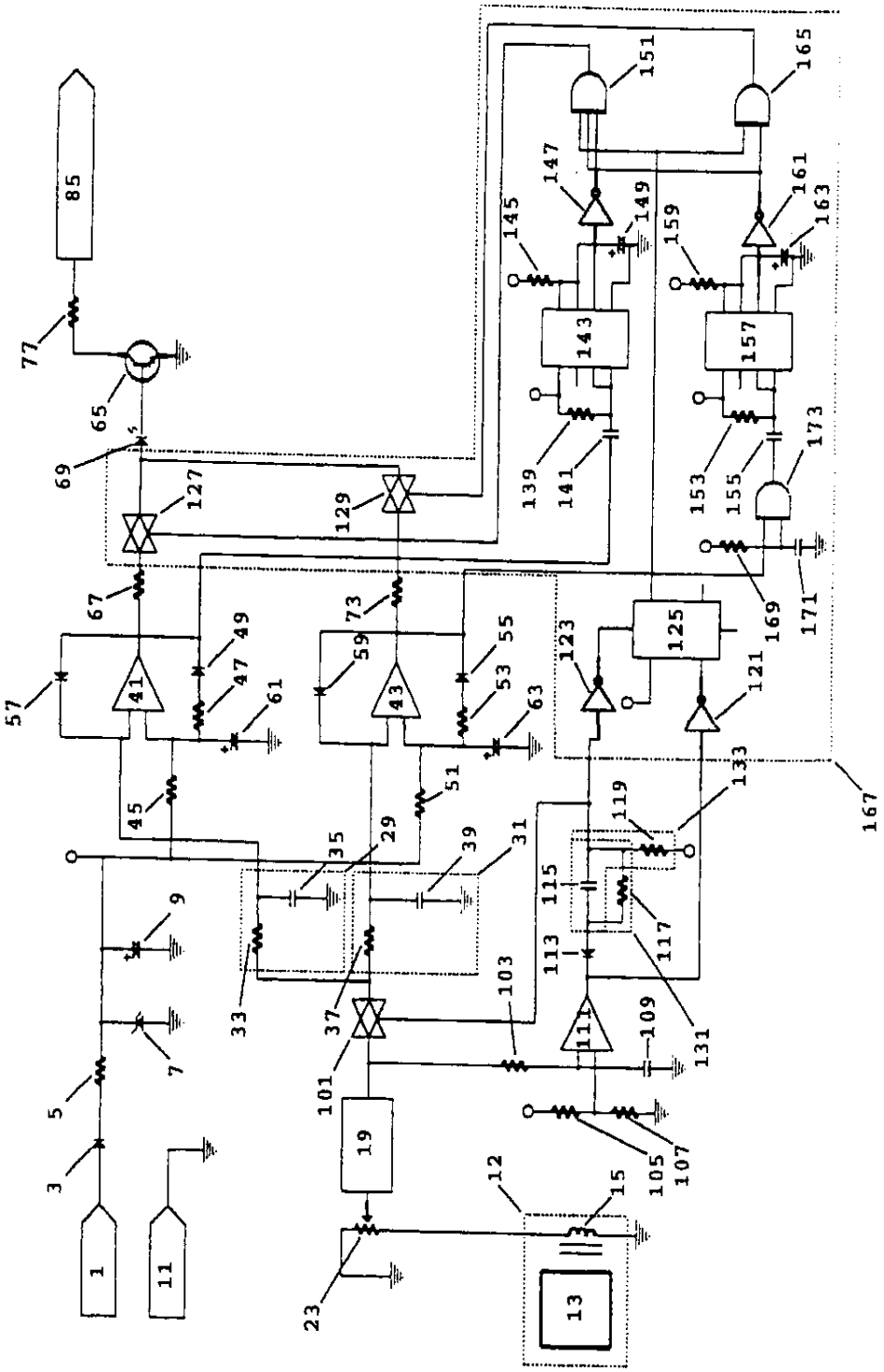
1
3
5
7
9
11
12
13
15
19
23
29
31
33
35
37
39
41
43
45
47
49
51
53
55
57
59
61
63
65
67
69
73
77
85
101
103
105
107
109
111
113
115
117
119
121
123
125
127
129
131
133
139
141
143
145
147
149
151
153
155
157
159
161
163
165
167
169
171
173

FIGURE 3

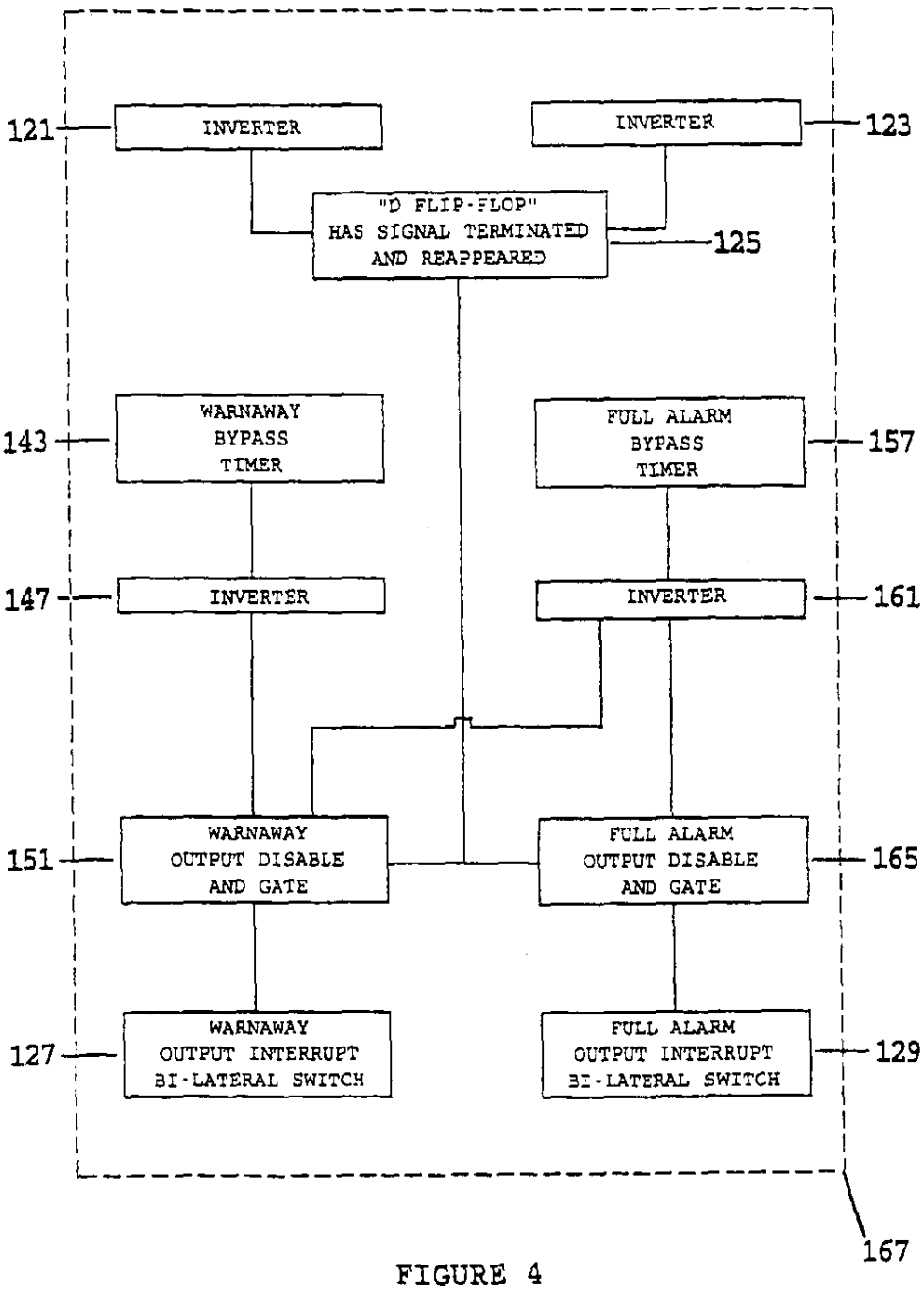
121
INVERTER
INVERTER
123
"D FLIP-FLOP"
HAS SIGNAL TERMINATED
AND REAPPEARED
125
143
WARNAWAY
BYPASS
TIMER
FULL ALARM
BYPASS
TIMER
157
147
INVERTER
INVERTER
161
151
WARNAWAY
OUTPUT DISABLE
AND GATE
FULL ALARM
OUTPUT DISABLE
AND GATE
165
127
WARNAWAY
OUTPUT INTERRUPT
BI-LATERAL SWITCH
FULL ALARM
OUTPUT INTERRUPT
BI-LATERAL SWITCH
129
167

FIGURE 4

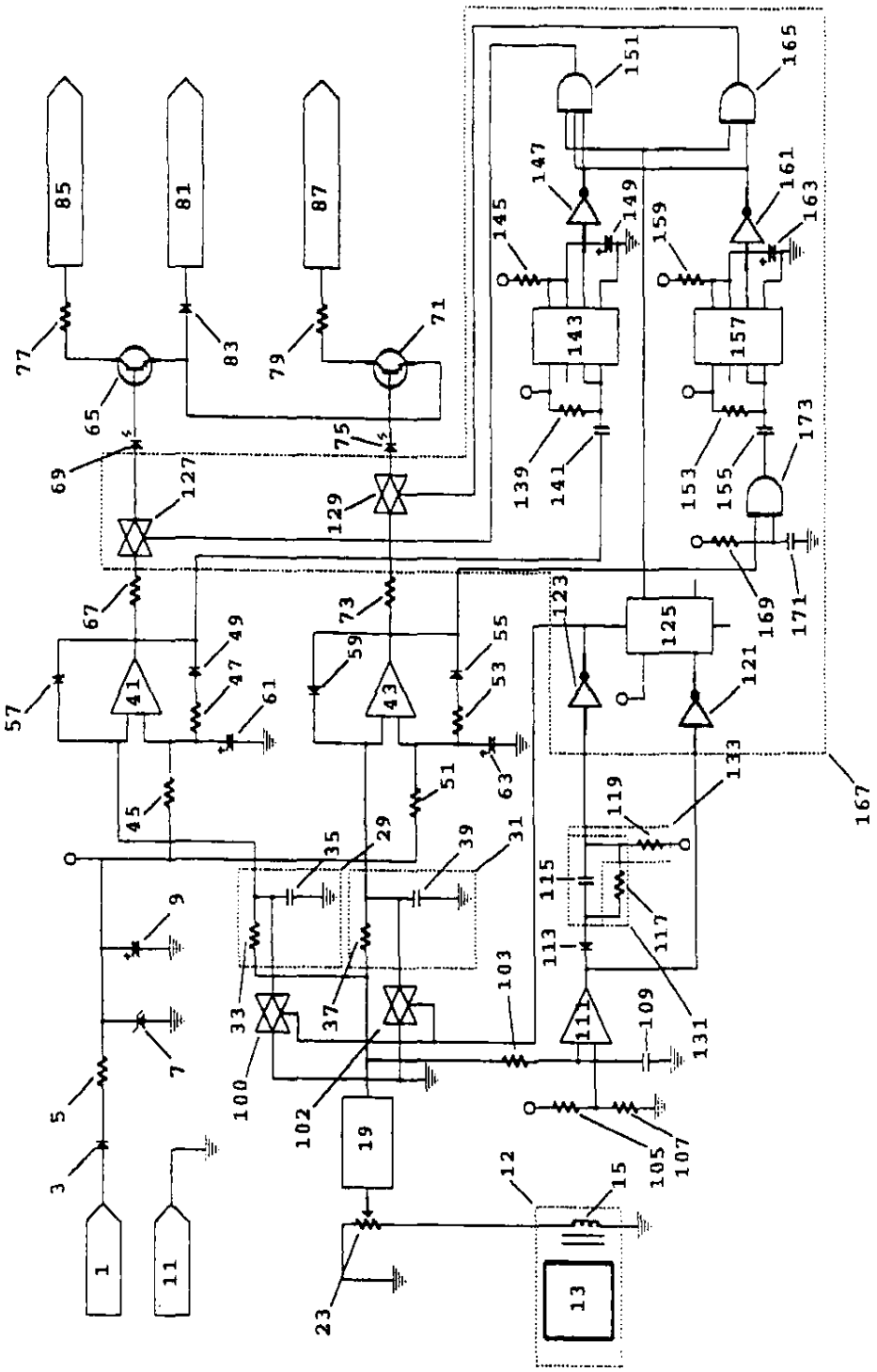

FIGURE 5

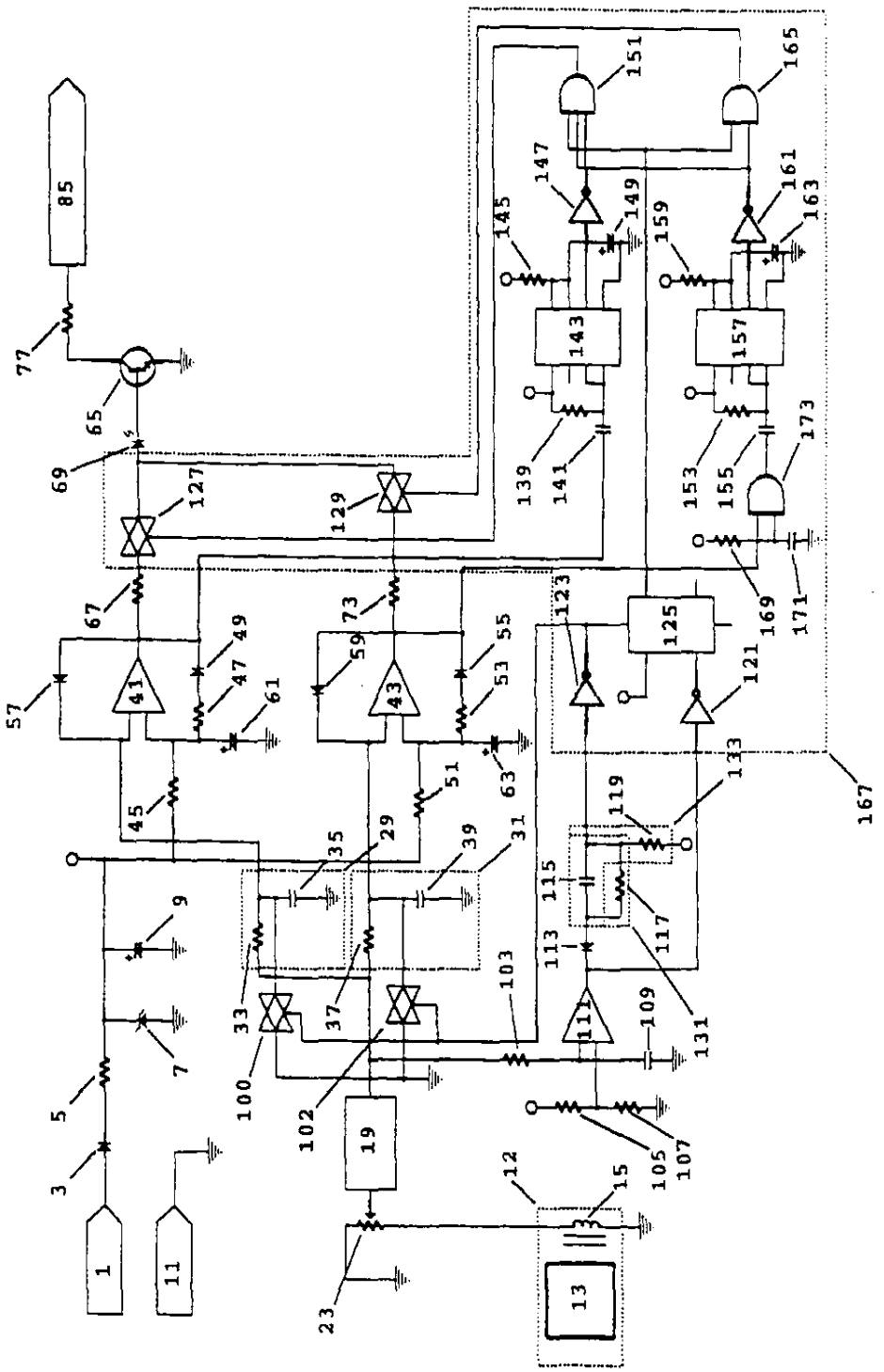
85
77
65
69
127
129
67
57
41
49
47
61
73
59
43
55
53
63
45
51
35
29
39
31
9
7
5
3
1
11
33
37
100
102
103
19
23
12
15
13
105
107
109
111
113
115
117
119
131
133
121
123
125
169
171
167
173
153
155
157
159
161
163
165
151
147
149
145
143
139
141

FIGURE 6

shocks delivered to the vehicle, using a single shock sensor of the type previously described. An alarm is produced that is proportionate to these shocks. The low intensity alarm is called a "warn-away" and is of a serious but far quieter nature and will generally get the proper message to the individual without engaging the full alarm. The person inducing the shock is quietly but firmly advised by prerecorded voice or a series of soft chirps of the limited intrusion while the vehicle owner is not required to attend the vehicle to shut off the alarm.

In addition, this invention includes the novel feature of providing full wave rectification of the output from the shock sensor and clipping or ignoring the first few milliseconds of the signal produced and further requires the signal to drop to its zero or reference voltage before triggering any warning alarm. Therefore, only physical assaults on the vehicle, as compared with "electrical" assaults, are allowed to proceed through the system to be subsequently analyzed and compared. These features therefore eliminate the spurious signals that are produced by non-physical assaults.

Most security systems involve only half-wave rectification of the induced signal emanating from the induction coil. Shocks to the protected vehicle may cause the detector, such as a magnet positioned adjacent the induction coil, to first swing away from the coil before swinging back toward the coil in periodic motion. In that situation, should the rectification include only the first swing away from the coil, the signal thereby generated would be of unnaturally low value and not be an accurate reproduction of the full intensity of the shock. Full wave rectification of the induced signal nullifies this anomaly and provides a signal representing a more accurate assessment of the shock. Therefore, the output from the magnet-induction coil is made more accurate and not so dependent upon whether the coil first moves toward the induction coil or away from it; a signal of similar strength is produced notwithstanding whether the magnet is first caused to approach the coil or recede from it.

The method and apparatus disclosed herein analyzes the signal produced by the changing magnetic field from the vibrating magnet and, in the case of a mild or low intensity shock, generates a pulse that may be used to activate a warn-away alarm that will automatically reset itself without intervention by the vehicle owner. The same method and apparatus will generate both the mild shock responsive pulse as well as a stronger second pulse when it is determined that the shock exceeds a specific energy level. Both the non-threatening and the threatening levels of incoming shock are constantly monitored by the apparatus.

When the non-threatening "warn-away" pulse is generated the threatening pulse generator is still in a monitoring mode and can be activated by a threatening level shock incoming to the vehicle even while a warn-away message is being given. If two or more mild shocks are received by the vehicle within a finite time period, such as 7 seconds, the system will produce a full alarm whereas if the mild shocks are repeated on a sequence longer in time than 7 seconds, a second and repeated "warn-away" alarm will be produced again.

The prior art has not yet appreciated these features and would continue to generate repeated "warn-away" alarms. In fact, in some cases the energy dispensed in the "warn-away" alarm is of sufficient magnitude to generate a low-threat level input that triggers another "warn-away" alarm so that the system continues to cycle "warn-away" alarms each induced by the preceding alarm.

Further, the invention herein contains the unique property of ignoring the first few milliseconds of signal produced by the sensor. A physical shock lasts far longer and the energy level of the residual signal is sufficient to pass through an integrator to a comparator to determine the relative strengths of the shocks. The signals produced by RF bursts, EMF bursts and the like do not last beyond that period because there is no physical movement imparted to the magnet; the energy bursts only interacted with the induction coil. Accordingly, those signals produced by non-physical excitement of the induction coil and that do not subside to its zero value before reappearing will not be allowed to proceed through the rest of the analyzing circuit and thus will not cause an alarm to be produced.

To overcome the problem of repeated sirens during periods of extended sensor input, such as in the train passing example, or even when a truck or other heavy vehicle passes a parked car, means are provided to prevent repeated alarms as long as the initial input remains within a given intensity for an extended time. For instance, as long as the intensity level of the input signal remains rather constant following cessation of the full alarm signal, the circuit will not process another sensor input. This means that the prolonged motion of the train or sensor input from a slow moving truck passing a car will not cause the alarm to sound again. This feature also prevents continuous alarm outputs in those cases when the input causes the input sensor to go into unabated oscillation. This input may be mechanical in nature (the train example) or from electrical disturbances.

In a second embodiment of this invention, the circuit is designed such that fewer wires need be used to attach the sensor to the alarm giving rise to a savings in material and reduction in installation time and training.

The prior art has recognized some of these problems, however, to date there has been little success achieved in solving them. In the patent to Hwang, (U.S. Pat. No. 5,084,967) a "motion detector" is allegedly connected to a pair of signal amplifier circuits that, upon receipt of a long signal or a series of short pulses from the detector, will sound a "full" alarm whereas, upon receipt of a shorter pulse signals, will sound a "pre-entry warning", lesser in severity than the "full" alarm. However, close examination of this patent discloses that the "detector" is merely a switch that is purely time-dependent so that the signal must be either of long duration or short duration to actuate the circuit. While in the block diagram shown in the patent there is a call for a "signal amplifier circuit", the schematic shows merely the use of components that are arranged as a switch to turn on and off a transistor to let the detected signal pass on to the alarm warning device. Thus, there is no comparison of the "level of intensity" of the signal but merely the "duration" of the signal notwithstanding its intensity. This is not an accurate assessment of a threat signal and does not detect between "intensities" nor between physical and non-physical inputs and therefore is lacking. In addition, the output signal from this prior art device goes directly to the signalling device (siren) whereas the instant invention interposes another device, the alarm control module, that determines what type of alarm is to be generated.

Accordingly, the main object of this invention is a method and apparatus for use on an electronically secured vehicle that responds differently to different intensities of shock received by the vehicle. Other objects of the invention include a method and apparatus that has at least two levels of intensity determination, one for a relatively light shock received by the vehicle to produce a pulse that may be used to trigger a warning of a stronger alarm should the shock not be discontinued and a separate pulse that may be used to trigger a stronger, louder alarm for non-discontinued light

shocks and stronger shocks; a method and apparatus for producing a pulse that may be used to trigger a warn-away audible alarm that may be repeatedly sounded to signify the vehicle is under electronic security while not producing a pulse that may trigger the loudest alarm so as to minimize the disturbance to those nearby in the event of a non-threatening shock received by the vehicle; a method and apparatus that maintains readiness to produce a pulse that may be used to trigger an audible alarm even while a warn-away alarm message is being used; a method and apparatus for detecting a signal produced by a non-physical assault on the vehicle, such as by a burst of RF energy or EMF energy, and for removing it from further interaction in the system circuitry; a method and apparatus that provides full wave rectification of the induced signal in the induction coil to provide a more accurate analysis of the induced signal regardless whether the magnet initially moves away from the coil or toward it; an apparatus that may be retrofitted into existing vehicles as well as included as original equipment on new vehicles; and, an apparatus that will automatically rearm upon the completion of a measured length of the warn-away or the security-threatening alarm. These and other objects of the invention may be obtained by reading the following specification along with the drawings that are appended hereto. The protection sought by the inventor may be gleaned from a fair reading of the claims that conclude this specification.

DESCRIPTION OF THE DRAWINGS

FIG. 1 is a schematic diagram of the apparatus using the method that provides the features of this invention;

FIG. 2 is a flow diagram illustrating the operation of the apparatus generally depicted in FIG. 1;

FIG. 3 is a schematic diagram of an alternate embodiment of the apparatus showing less wiring needed to accomplish the same functions as shown in FIG. 1;

FIG. 4 is a flow diagram of a portion of that shown in FIG. 2;

FIG. 5 is a schematic diagram of an alternate embodiment of the bilateral switch wiring shown in FIG. 1; and,

FIG. 6 is a schematic diagram of an alternate embodiment of the bilateral switch wiring shown in FIG. 3.

DESCRIPTION OF THE PREFERRED EMBODIMENT

The novel method of this invention for indicating the threat level of an incoming shock to an electronically secured structure, such as a vehicle comprises, the steps of sensing a shock delivered to the vehicle, generating an electric signal the strength of which is proportional to the intensity of the shock, ignoring the first portion of the signal so as to remove from further consideration those shocks that are non-physical, analyzing the remaining signal to determine if it is of a low, generally non-threatening intensity or a higher, generally security-threatening intensity, and producing either a first pulse that triggers a low intensity "warn away" alarm, or separate first and second pulses, representing a signal containing both the low intensity and higher intensity components, that trigger both a low and a high intensity alarms. The step of generating an electric signal includes generating an alternating current signal whose amplitude and length is proportional to the intensity of the physical shock. FIG. 1 shows the apparatus of this invention.

In FIG. 1 the solid lines between components refer to conductors and will not be individually numbered except where necessary. Where conductors cross and the intersection is marked with a dot or period, it is a junction; where one conductor crosses another and the intersection has no dot or period, there is no junction. As shown in FIG. 1, an input voltage, generally in the range of from about six to about eighteen volts (d.c.), is inputted from a battery (not shown), such as a car battery or other source of direct current, to an input terminal 1. The current is regulated by a reverse flow protection diode 3, a surge limiting resistor 5, an over-voltage protection Zener diode 7 and a filter capacitor 9 to produce a steady flow of direct current. The ground return enters at input terminal 11.

The step of sensing a mechanical shock delivered to the vehicle is performed by a sensor 12 comprising a permanent magnet 13, about which a continuous magnetic field exists, and is suspended in a conventional elastic mount (not shown), such as between a pair of rubber bands anchored to a pair of spaced-apart posts (not shown) that rest on a solid base, such as the security sensor housing (not shown). Magnet 13 will detect a incoming shock and begin to vibrate back and forth in the mount in proportion to the intensity of the shock. That is to say, for light or low intensity shocks, magnet 13 will vibrate only a small amount and the vibrations will soon attenuate, while for higher intensity shocks, the vibration will be greater and last longer.

Nearby is fixedly positioned an induction pickup coil 15. The step of generating an electric signal, the strength of which is proportional to the intensity of the shock, is performed by the variation of the magnetic field from the vibrations magnet 13 inducing an alternating current in a coil 15 that produces an alternating voltage or signal.

The step of analyzing the signal to determine if it is of a low or high intensity includes the first step of passing the signal through a switching capacitor amplifier 19 to provide full wave rectification, i.e., the negative portions of the signal are converted to positive portions. According, the output of amplifier 19 is always positive and will give an approximately equal output no matter the direction of the impact to the vehicle so as to iron out the difficulties herein before exhibited when the impact to the vehicle causes magnet 13 to initially move away from coil 15. The gain of amplifier 19 is fixed at a predetermined value. Potentiometer 23 is used to adjust the level of the input from sensor 12.

An analog bilateral switch 101 is provided. It is opened a few, i.e. 5 milliseconds of each pulse string, as will be hereinafter more fully set forth, in order to cut off the first portion of the signal output from amplifier 19. This cut off is to prevent extraneous, nonphysical energy surges, such as from EMF fields, as hereinbefore described, from tripping the alarm.

Shutting off switch 101 is accomplished by use of an inverting comparator 111 and its associated circuitry. Resistors 105 and 107 establish a reference voltage for comparator 111. Resistor 103 and capacitor 109 filter out high frequency transients on the input to comparator 111. As a signal inputted to comparator 111 goes high, the output goes low and is coupled through a diode 113 and a capacitor 115 to switch 101. By adjusting the capacitance of capacitor 115, a delay, such as 5 milliseconds is required to charge capacitor 115 in order to turn on bilateral switch 101. Resistor 117 is provided as the discharge resistor for capacitor 115 and its value is chosen so that capacitor 115 will not discharge for several hundred milliseconds so as not to interrupt the signal pulse string. The discharge time of capacitor 115 is such that

only the first few milliseconds of any pulse string is allowed to be coupled through capacitor 115 and diode 113 to shut off analog bilateral switch 101.

The next step, after passing the amplified signal through switch 101 is to input this amplified signal simultaneously to two separate and independent voltage integrators, 29 and 31, shown within dotted line perimeters, that are paralleled from the output of amplifier 19. Integrator 29 comprises a resistor 33 and a capacitor 35 while integrator 31 comprises a resistor 37 and a capacitor 39. The ratio of sensitivity of integrators 29 and 31 is adjusted, by varying the resistance of resistors 33 and 37 and varying the capacitance of capacitors 35 and 39 to the order of approximately 5:1 so that integrator 29 is approximately five times as sensitive as integrator 31. This ratio can be varied outside of 5:1 under certain circumstances such as where the vehicle is unusually large.

The next step is to send the output of integrators 29 and 31 to a pair of separate voltage comparators/pulse generators 41 and 43 that are equally referenced from input terminal 1. The reference for voltage comparator 41 is established by resistors 45 and 47 and a diode 49 while the reference for voltage comparator 43 is established by resistors 51 and 53 and a diode 55. Another pair of diodes 57 and 59 are used to latch the respective voltage comparators 41 and 43 when their respective input signals exceed the comparator reference voltages.

The next step in this novel method is for the pulse generator portion of comparators/generators 41 and 43 to output either a first pulse from generator 41 representing a low intensity signal or separate first and second pulses from both generators 41 and 43 representing a signal containing a low intensity and a high intensity component. This is performed when voltage comparator 41 or 43 is latched through either diode 57 or diode 59 when the incoming signal from integrators 29 or 31 exceeds the reference voltage thereto. Once latched, the respective comparator produces an output pulse timed by resistor 45 and capacitor 61 with respect to comparator/pulse generator 41 or by resistor 51 and a capacitor 63 with respect to comparator/pulse generator 43 to one of two drive transistors 65 and 71.

Output drive transistor 65 receives the output pulse from voltage comparator/pulse generator 41 through a resistor 67 and an indicating light emitting diode 69 for the duration of the pulse from generator 41. The other output drive transistor 71 receives the output pulse from voltage comparator/pulse generator 43 through a resistor 73 and an indicating light emitting diode 75 for the duration of the pulse from generator 43. Resistors 77 and 79 are current limiting resistors to protect transistors 65 and 71 respectively. The outputs are enabled by a ground placed on terminal 81 through a diode 83. The outputs are fed respectively to terminal 85 to connect to a warn-away alarm circuit (not shown), and to terminal 87, to connect to the full alert alarm circuit (not shown). The output pulse for the warn-away alarm, from terminal 85, may be set at one length, such as 200 milliseconds, and the output pulse for the full alarm from terminal 87 may be set at a different length, such as approximately 1 full second.

The negative 5 millisecond pulse from comparator 111 is inverted by inverter 123. This pulse resets and holds in reset for the 5 millisecond period the "D flip-flop" 125. The "Q" output of 125 is connected to the inputs of "AND-GATES" gates 151 and 165, causes the outputs of 151 and 165 to go low. The low signals at the outputs of 151 and 165 opens normally closed analog bilateral switches 127 and 129. This prevents any output from pulse generators 41 and 43 from being coupled to output transistors 65 and 71.

After the end of the 5 millisecond reset pulse, the "Q" output at flip-flop 125 is set high by a clock signal created by comparator 111. This clock pulse is inverted by inverter 121 to present the proper input to the 125 clock input. The sensor outputs 85 and 87 are now enabled for the duration of the output pulse(s) created by pulse generators 41 and 43.

Output bypass timers 143 and 157 are triggered and reset from the trailing edge (negative going edge) of the output pulses from pulse generates 41 and 43 respectively. The output of full alarm pulse generator 43 is applied to timer 157 via AND-GATE 173. When any input of an And gate goes low, it's output goes low. All inputs of an AND-GATE must be high to get a high at it's output. These triggers are coupled to the inputs of the timers by coupling capacitors 141 and 155 respectively. Resistors 139 and 153 are pull-up resistors on the trigger input of their respective timers. Resistor 145 and capacitor 149 control the time that the "warn-away" output is disabled. Resistor 159 and capacitor 163 control the time that the "alarm" output is disabled. When the timers are triggered/reset, the timing capacitors 149 and 163 are discharged, the outputs go high, and the timing cycle is started. The outputs will go low at the end of the timing cycle.

The high output from warnaway bypass timer 143 is inverted by inverter 147 and applied to AND-GATE 151. The low at the input of 151 causes the output of 151 to go low opening bilateral switch 127. This interrupts any output from pulse generator 41 and disables the warnaway output drive to output transistor 65. All warnaway outputs are therefore disabled anytime that warnaway bypass timer 143 is running. All repetitive triggers that occur inside the timing window are bypassed (disabled) on the warnaway output until the warnaway bypass timer expires (approximately ½ second). While the timer is running, if the output at pulse generator 41 goes low (output pulse expires), the timing capacitor is discharged, and the timer is restarted with a full charging cycle duration to run.

Full alarm bypass timer 157, upon receiving a negative pulse from the trailing edge of the output pulse from pulse generator 43 via AND-GATE 173, works identical to the warnaway bypass timer 143. The high output from 157 is inverted by inverter 161 and applied to AND-GATES 151 and 165. The low at the inputs of 151 and 165 causes the outputs of 151 and 165 to go low. This low output in turn is applied to the control input of bilateral switches 127 and 129. Both output drives are interrupted, disabling both outputs (warnaway and full alarm) for the duration of the full alarm output bypass timer 157 (several seconds).

The full alarm bypass timer 157 is also used as a power up reset timer. At power on capacitor 171 is fully discharged, applying a low at the input of AND-GATE 173. Capacitor 171 is slowly charged through bias resistor 169 removing the low input from AND-GATE 173. The output of 173 is low during this charging period triggering full alarm bypass timer 157. Therefore, at power up, both outputs are disabled for several seconds until timer 157 times out.

FIG. 2 shows the flow of the induced signal and produced pulse through the circuit of FIG. 1. FIG. 4 is a flow diagram of a portion of FIG. 2. The magnet 13 and coil 15 components pick up the incoming shock and generate a signal the strength of which is proportional to the intensity of the shock. Amplifier 19 provides full wave rectification and amplification of the signal for presentment through switch 101 to integrators 29 and 31 in parallel for integration of the

total value of the pulse train less the first part thereof cut off by switch 101. The respective sensitivities of integrators 29 and 31 help to differentiate between a light shock that in all probability is non-threatening in nature and a heavier shock that represents a potential intrusion into the vehicle. The separate voltage comparators/output pulse generators 41 and 43 complete the differentiation and output a pulse to the output indicator and driver that results in one or both alarms being activated.

Amplifier 19, referenced by voltage from the car battery, will amplify all shocks received by the vehicle. Integrators 29 and 31 will ignore any signal whose peak-to-peak voltage is equal to or less than the amplifier reference voltage. Hence, very light shocks, although felt by magnet 13 and coil 15, will not produce a signal or signals sufficient to be activated by voltage comparators/output pulse generators 41 and 43 to latch the respective unit and produce a pulse to be sent on to output drive transistors 65 and 71.

Upon receipt of a light shock, above the reference level of amplifier 19, the circuit will operate to activate voltage comparator 41, latch it, and produce a pulse that will activate the warn-away alarm trigger output (not shown) through terminal 85. While this is going on, the circuit remains fully prepared to receive and process other shocks. Should a heavy shock be received while the warn-away alarm is given, the security breached alarm trigger output, will be tripped through terminal 87 and both alarms output will be tripped to go off simultaneously. In all cases, both alarm trigger outputs are tripped go off when a severe shock is received while only the warn-away alarm trigger output is tripped when a lighter shock is received.

FIG. 3 shows an alternate embodiment of the invention. By changing the timing of the full alarm pulse generator, to say 5 times the normal 200 milliseconds, allows for a considerable reduction in the output circuitry. This would also reduce the installation time of the sensor. With a 200 millisecond warnaway output pulse and one second full alarm pulse, these pulses can be outputted on the same wire for applying to one such input of the alarm control module.

To achieve a longer duty cycle for a full intensity alarm, full; alarm output pulse generator 43/timing capacitor 63 is changed to 5 times it's normal value. The full alarm output pulse time is therefore increased by a factor of 5.

The outputs from output pulse generators 41 and 43 are then applied to the common output indicating LED 69 and output drive transistor 65. This is accomplished via output drive current limiting resistors 67 and 73 and analog bilateral switches 127 and 129 connecting to a common conductor before reaching LED 69. Therefore the LED will indicate warnaway output with a short 200 millisecond light output pulse and full alarm output with a longer one second light output pulse. The output transistor 65 will be conducting applying a ground or near ground potential to the collector for 200 milliseconds for warnaway and for one second for full alarm.

This invention also carries the capability to drive the vehicle's electronic security system's audible or visual warning devices directly or indirectly by use of an external control relay. Since the warn-away output pulses are short (approximately 2/10 of a second) and could be enabled by the vehicle's electronic security system, this would greatly reduce the annoyance created by an alarm system's full alarm. The output drivers have the capability to drive output control circuits as long as a ground is applied to output control terminal 81. These output pulses would be fed through output terminals 85 and 87 to directly or indirectly drive warning devices.

Although this invention is written in respect to a shock sensor, it is not limited to the same. The input to the protected vehicle could be sensed by any of the following detectors: shock, motion, shock/motion, audio discriminator, field disturbance, or other detector(s) with the proper input circuitry.

FIG. 5 represents a modification to the preferred embodiment shown in FIG. 1 and shows the output of the 5 millisecond timer 131 to invert the signal, by inverter 123, and feeding the output signal to two normally open, bilateral switches 100 and 102. The signal closes switches 100 and 102 for the 5 millisecond period. This also keeps integrator capacitors 35 and 39 shorted out for the 5 millisecond time period. This represents another method of handling the signal.

FIG. 6 represents a modification to the other preferred embodiment shown in FIG. 3 and also shows the output of the 5 millisecond timer 131 to invert the signal, by inverter 123, and feeding the output signal to two normally open, bilateral switches 100 and 102. The signal closes switches 100 and 102 for the 5 millisecond period. This also keeps integrator capacitors 35 and 39 shorted out for the 5 millisecond time period. This represents another method of handling the signal.

Also this unit is described as a 2-stage sensor, but the invention is not limited to 2 stages and may be employed with three (3) or more stages. The output pulses may vary in lengths such as 200 milliseconds for the "warnaway" and approximately one full second for the full alarm output. This will allow alarms with the capability to distinguish between "warnaway" and full alarm using one input. This will eliminate one drive transistor and one wire.

While the invention has been described by reference to a particular embodiment thereof, those skilled in the art will be able to make various modifications to the described embodiment of the invention without departing from the true spirit and scope thereof. It is intended that all combinations of elements and steps which perform substantially the same function in substantially the same way to achieve the same results are within the scope of this invention.

What is claimed is:

1. A method of indicating a threat level of an incoming shock to an electronically secured vehicle comprising the steps of:

a) sensing a shock delivered to the vehicle;

b) generating a signal having strength proportional to the intensity of said shock;

c) analyzing said signal to determine if it has a low, generally non-threatening intensity or a higher, generally security-threatening intensity; and

d) producing either a first pulse, representing that said signal has only said low intensity, or separately producing said first pulse and a second pulse, representing that said signal has both said low intensity and said higher intensity.

2. The method of claim 1 wherein the step of generating said signal includes the step of generating an alternating current signal having an amplitude proportional to said intensity of said shock.

3. The method of claim 1 wherein the step of analyzing said signal includes the steps of:

a) amplifying said signal to produce an amplified signal;

b) impressing said amplified signal simultaneously to at least two separate integrators of different sensitivity to produce integrated signals; and

c) activating a pulse generator specific to each of said integrated signals, if the associated integrated signal reaches a predetermined level.

4. The method of claim 1 wherein the step of analyzing said shock signal includes the steps of:

a) amplifying said signal to produce an amplified signal;

b) impressing said amplified signal simultaneously to at least two separate integrators of different sensitivity to produce integrated signals;

c) impressing said integrated signals simultaneously to at least two separate comparators of different sensitivity to produce a first comparator signal, if said integrated signals reach a first predetermined level, indicating said non-threatening intensity signal or a second comparator signal, if said integrated signals reach a second, higher predetermined level, indicating said higher threatening intensity signal; and

d) activating a pulse generator specific to said first and said second comparator signals.

5. The method of claim 1 wherein the step of analyzing said shock signal includes the steps of:

a) amplifying said signal to produce an amplified signal;

b) impressing said amplified signal simultaneously to at least two separate integrators/comparators, each said integrator/comparator having different sensitivity; and

c) activating a pulse generator to produce said first and said second pulses specific to each signal integrated and compared if that signal reaches an associated predetermined level.

6. The method of claim 1 wherein said step of analyzing said signal includes the steps of:

a) amplifying said signal to produce an amplified signal;

b) impressing said amplified signal simultaneously to at least two separate integrators of different sensitivity, to produce integrated amplified signals;

c) impressing said separate integrated, amplified signals to at least two signal comparators, one in series with each said integrator having different sensitivity to provide a first comparator signal indicating said non-threatening intensity signal or a second comparator signal indicating said higher threatening intensity signal; and

d) activating a pulse generator specific to each said comparator signal if said integrated, amplified signal reaches an associated predetermined level.

7. The method of claim 1 including the additional step of ignoring the first few milliseconds of said signal produced by a shock sensing device to eliminate spurious, nonphysical signals produced by random EMF energy fields interacting with said shock sensing device.

8. The method of claim 1 wherein the step of providing either said first pulse or said second pulse includes sending said pulses over a single conductor to an alarm control.

9. The method of claim 1 including the additional step of ignoring any signal produced by nonphysical energy.

10. The method of claim 9 wherein said nonphysical energy includes an EMF field.

11. The method of claim 1 wherein the step of analyzing said signal includes the additional steps of amplifying and rectifying the full wave of said signal so that said output represents all values of said signal, is solely positive, and reduces the differential in the positive and negative aspects of said signal that are produced when a magnet swings away from an inductor coil before swinging toward said coil.

12. The method of claim 1 wherein said second pulse has a pulse-width greater than a pulse-width of said first pulse.

13. An electronic vehicle security system for indicating a threat level of an incoming shock to an electronically secured vehicle comprising:

a) means for sensing a shock delivered to the vehicle;

b) means for generating a signal having strength proportional to the intensity of said shock;

c) means for analyzing said signal to determine if it has a low, generally non-threatening intensity or a higher, generally security-threatening intensity; and

d) means for providing either a first pulse representing that said signal has only said low intensity or separately providing said first and a second pulse, representing that said signal has both said low intensity and said higher intensity signal.

14. The electronic vehicle security system of claim 13 further including means for ignoring the first few milliseconds of said signal produced by said shock sensor to eliminate spurious, nonphysical signals produced by random EMF energy fields interacting with a shock sensing device.

15. The electronic vehicle security system of claim 13 further including means for sending said first and second pulses over a single conductor to an alarm control.

16. The system of claim 13 wherein said means for sensing a shock delivered to said vehicle includes a permanent magnet, having a magnetic field thereabout, suspended in an elastic mount on said vehicle for vibrating in said mount in response to said shock.

17. The system of claim 16 further including an induction coil fixedly mounted near said magnet for receiving a vibrating magnetic field therein to produce an induced alternating current and voltage therein.

18. The system of claim 17 further including a capacitor through which said induced alternating current and said voltage are passed to remove direct current and voltage therefrom.

19. The system of claim 17 wherein said means for analyzing said signal includes:

a) a signal amplifier, having an output therein, for receiving said induced alternating current and voltage from said induction coil and providing an amplified signal thereof; and

b) first and second voltage integrators connected to said amplifier output, said first integrator having a high sensitivity for responding to said non-threatening intensity signal and said second integrator having a lower sensitivity for responding to said higher intensity signal. said integrators simultaneously receiving said amplified signal from said amplifier.

20. The system of claim 19 wherein said means for providing either said first pulse or said separate first and second pulses include a pair of voltage comparators/output-pulse-generators, one connected to each said voltage integrator for comparing integrated voltages produced from each said integrator and providing said first pulse representing said low intensity signal from said high sensitivity integrator and providing both said first and said separate second pulse representing said low intensity signal from said high sensitivity integrator and said high intensity signal from said low sensitivity integrator.

21. The system of claim 17 wherein said means for analyzing said signal includes:

a) a signal amplifier, having an output therein, for receiving said induced alternating current and voltage from said induction coil and providing an amplified signal thereof; and

b) first and second voltage comparators connected to said amplifier output, said first comparator having a high

sensitivity for responding to said non-threatening intensity signal and said second comparator having a lower sensitivity for responding to said higher intensity signal, said integrators simultaneously receiving said amplified signal.

22. The system of claim 17 wherein said means for analyzing said signal includes:

a) a signal amplifier, having an output therein, for receiving said induced alternating current and voltage from said induction coil and providing an amplified signal thereof; and

b) first and second voltage integrators and comparators connected to said amplifier output, said first integrator and comparator having a high sensitivity for responding to said non-threatening intensity signal and said second integrator and comparator having a lower sensitivity for responding to said higher intensity signal, said integrators and comparators simultaneously receiving said amplified signal from said amplifier.

23. The electronic vehicle security system of claim 13 further including means for ignoring any signal produced by nonphysical energy.

24. The electronic vehicle security system for indicating the threat level of an incoming shock to an electronically secured vehicle of claim 23 wherein said nonphysical energy includes an E F field.

25. The electronic vehicle security system of claim 13 wherein said second pulse has a pulse-width greater than a pulse-width of said first pulse.

26. A method of blocking spurious signals produced by a shock sensor in a motor vehicle anti-theft system from interaction between extraneous bursts of RF energy and a sensor induction coil, comprising the steps of:

a) amplifying a signal produced by a shock sensor to produce an amplified signal;

b) inputting said amplified signal to a comparator and comparing an output signal of said invertor/comparator against a known reference; and

c) outputting said amplified signal to an analog bilateral switch through a capacitor so that the charging of said capacitor will open said switch a few milliseconds to delete the front end of said amplified signal and remove it from further consideration.

27. The method of claim 26 wherein the step of amplifying said signal includes the additional steps of amplifying and rectifying a full wave of said signal so that said amplified signal represents all values of said signal, is solely positive, and reduces the differential of the positive and negative aspects of said signal that are produced when a magnet swings away from an inductor coil before swinging toward said coil.

28. A method of indicating the threat level of an incoming shock to an electronically secured vehicle including a magnet and an induction coil arranged as part of a shock sensor comprising the steps of:

a) sensing a shock delivered to the vehicle including the step of generating an alternating current signal having amplitude proportional to the intensity of said shock;

b) analyzing said signal to determine if it is of a low, generally non-threatening intensity or a higher, generally security-threatening intensity, including the steps of:

i) rectifying and amplifying said signal;

ii) impressing said rectified, amplified signal simultaneously to at least two separate integrators of different sensitivity;

iii) impressing said separate integrated, amplified signals to at least two signal comparators of different sensitivity, one in series with each said integrator; and

iv) activating a pulse generator responsive to an output of each signal comparator; and

c) providing either a first pulse representing a low intensity signal, or separate first and second pulses representing said signal containing both low intensity and higher intensity components.

29. The method of claim 28 including the additional step of ignoring the first few milliseconds of said signal to eliminate spurious signals produced by random EMF energy fields interacting with said shock sensor.

30. The method of claim 28 wherein the step of providing either said first pulse or said second pulse includes sending said pulses over a single conductor to an alarm control.

31. The method of claim 28 including the additional step of ignoring nonphysical signals interacting with the shock sensing device.

32. The method of claim 31 wherein said nonphysical signals include EMF energy fields.

33. The method of claim 28 wherein said second pulse has a pulse-width greater than a pulse-width of said first pulse.

34. An electronic vehicle sensor for indicating the threat level of an incoming shock to an electronically secured vehicle comprising:

a) means for sensing a shock delivered to a vehicle including a permanent magnet, having a magnetic field thereabout, suspended in an elastic mount on said vehicle for vibrating in said mount in response to said shock;

b) means for generating a signal the strength of which is proportional to the intensity of said shock including an induction coil fixedly mounted near said magnet for receiving a vibrating magnetic field therein to produce an induced alternating current and voltage therein;

c) a capacitor through which said induced alternating current and voltage are passed to remove direct current and voltage therefrom;

d) means for analyzing said signal to determine if it is a low, generally non-threatening intensity or a higher, generally security-threatening intensity including:

i) a signal amplifier for receiving said induced alternating current and voltage from said induction coil; and

ii) a pair of voltage integrators connected to an output of said amplifier which produces an amplified signal, one said integrator having a high sensitivity for responding to said amplified signal containing only low intensity components and the other said integrator having a lower sensitivity for responding to said amplified signal containing higher intensity components, said integrators simultaneously receiving said amplified signal from said amplifier; and

e) means for producing either separate first and second pulses representing said signal containing both said low intensity and said higher intensity component, or said first pulse representing said low intensity signal, including a pair of voltage comparators/output pulse generators, one connected to each said voltage integrator for comparing outputs produced from each said integrator and producing said first pulse representing said low intensity signal from said high sensitivity integrator and providing both said first and said separate second pulse from both said generators represent-

ing said low intensity signal from said high sensitivity integrator and a high intensity signal from said low sensitivity integrator.

35. The method of claim 34 wherein said second pulse has a pulse-width greater than a pulse-width of said first pulse.

36. A method of blocking spurious signals produced in a motor vehicle anti-theft system from interaction between extraneous bursts of EMF or RF energy and a sensor induction coil, comprising the steps of:

a) amplifying signals produced by a shock sensor including amplifying a full wave of said signal providing an amplified signal and rectifying said amplified signal so that said amplified signal represents all values of said signal, is solely positive, and reduces the differential in the positive and negative aspects of said signal that are produced when a magnet swings away from an inductor coil before swinging toward said coil;

b) outputting said amplified signal to an analog bilateral switch through a capacitor so that charging said capacitor will open said switch for a predetermined period of time to delete a front end of said amplified signal as it passes therethrough and remove said front end from further consideration; and

c) inputting said amplified signal to a comparator and comparing it against a known value.

37. The method of claim 36 wherein said predetermined period of time is about 5 milliseconds.

38. A method of blocking spurious signals produced by a shock sensor in a motor vehicle anti-theft system from interaction between extraneous bursts of RF energy and a sensor induction coil, comprising the steps of:

a) amplifying signals produced by a shock sensor to produce an amplified signal;

b) inputting said amplified signal to a comparator and comparing it against a known reference;

(c) ignoring said signal produced by said shock sensor for a predetermined period of time to eliminate spurious, nonphysical signals produced by random energy interacting with a shock sensing device and removing it from further consideration

39. The method of claim 38 wherein the step of ignoring said signal includes outputting said signal to an analog bilateral switch through a capacitor so that the charging of said capacitor will open said switch a few milliseconds to delete the front end of said signal and remove it from further consideration.

40. The method of blocking spurious signals produced by a shock sensor in a motor vehicle anti-theft system of claim 38 wherein said nonphysical signal includes an EMF field.

* * * * *

US005646591A

United States Patent [19]

Issa et al.

[11] Patent Number: 5,646,591

[45] Date of Patent: Jul. 8, 1997

[54] **ADVANCED METHOD OF INDICATING INCOMING THREAT LEVEL TO AN ELECTRONICALLY SECURED VEHICLE AND APPARATUS THEREFOR**

[75] Inventors: **Darrell Issa**; **Jerry Birchfield**, both of Vista, Calif.

[73] Assignee: **Directed Electronics, Inc.**, Vista, Calif.

[21] Appl. No.: **468,703**

[22] Filed: **Jun. 5, 1995**

Related U.S. Application Data

[63] Continuation-in-part of Ser. No. 945,667, Sep. 16, 1992, Pat. No. 5,534,845, and Ser. No. 433,819, May 4, 1995, abandoned, which is a continuation-in-part of Ser. No. 112,940, Aug. 30, 1993, Pat. No. 5,532,670, which is a continuation-in-part of Ser. No. 886,871, May 22, 1992, abandoned.

[51] Int. Cl.[6] G08B 13/22

[52] U.S. Cl. **340/566**; 340/429

[58] Field of Search 340/429, 566

[56] **References Cited**

U.S. PATENT DOCUMENTS

4,584,569	4/1986	Lopez et al.	340/429
4,866,417	9/1989	DeFino et al.	340/429
5,084,697	1/1992	Hwang	340/566

Primary Examiner—Glenn Swann

Attorney, Agent, or Firm—Sam Talpalatsky

[57] **ABSTRACT**

A method of indicating a degree of incoming threat to an electronically secured area consists of the steps of sensing via sensor a degree of threat delivered to a secured area and generating an electric signal proportional to the degree of threat; analyzing the signal to determine if it is a low degree of threat or a high degree of threat; and producing either a first pulse representing low degree of threat or separately producing the first pulse and a second pulse representing a signal having both low degree of threat and high degree of threat.

94 Claims, 15 Drawing Sheets

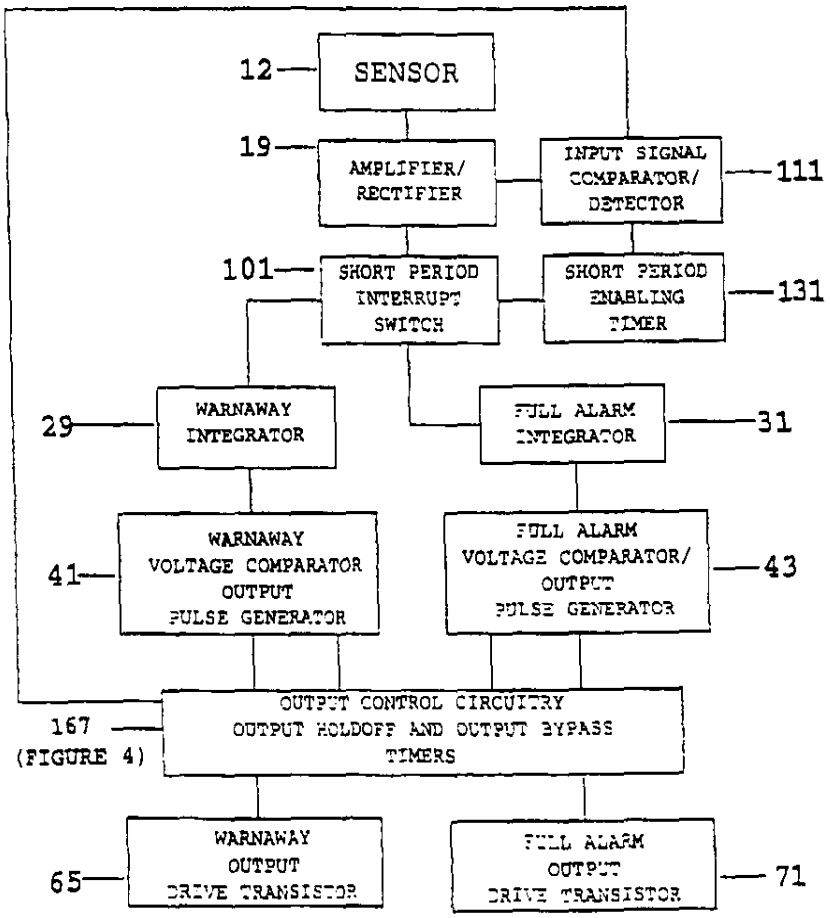

(FIGURE 4)

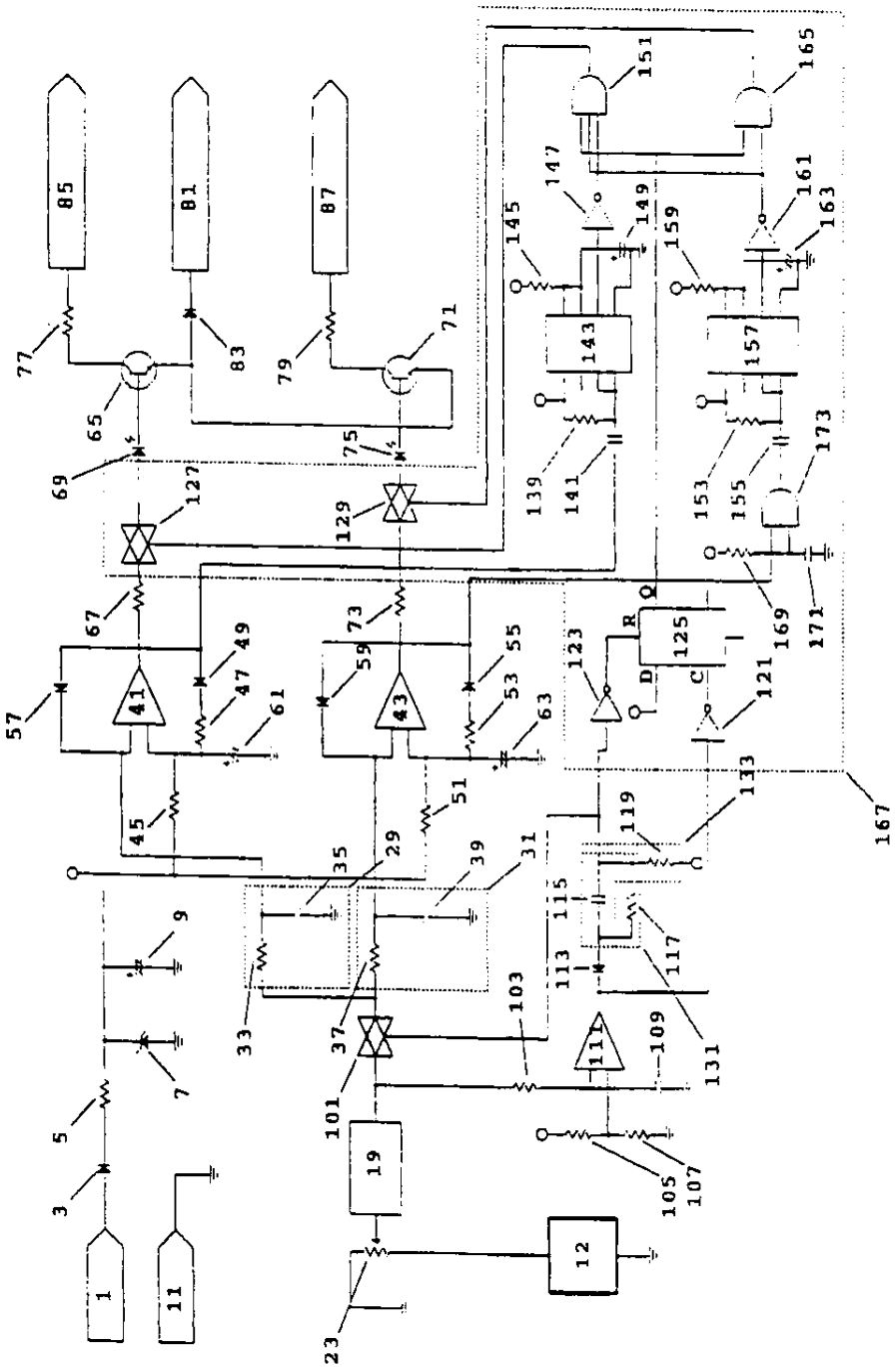

FIGURE 1

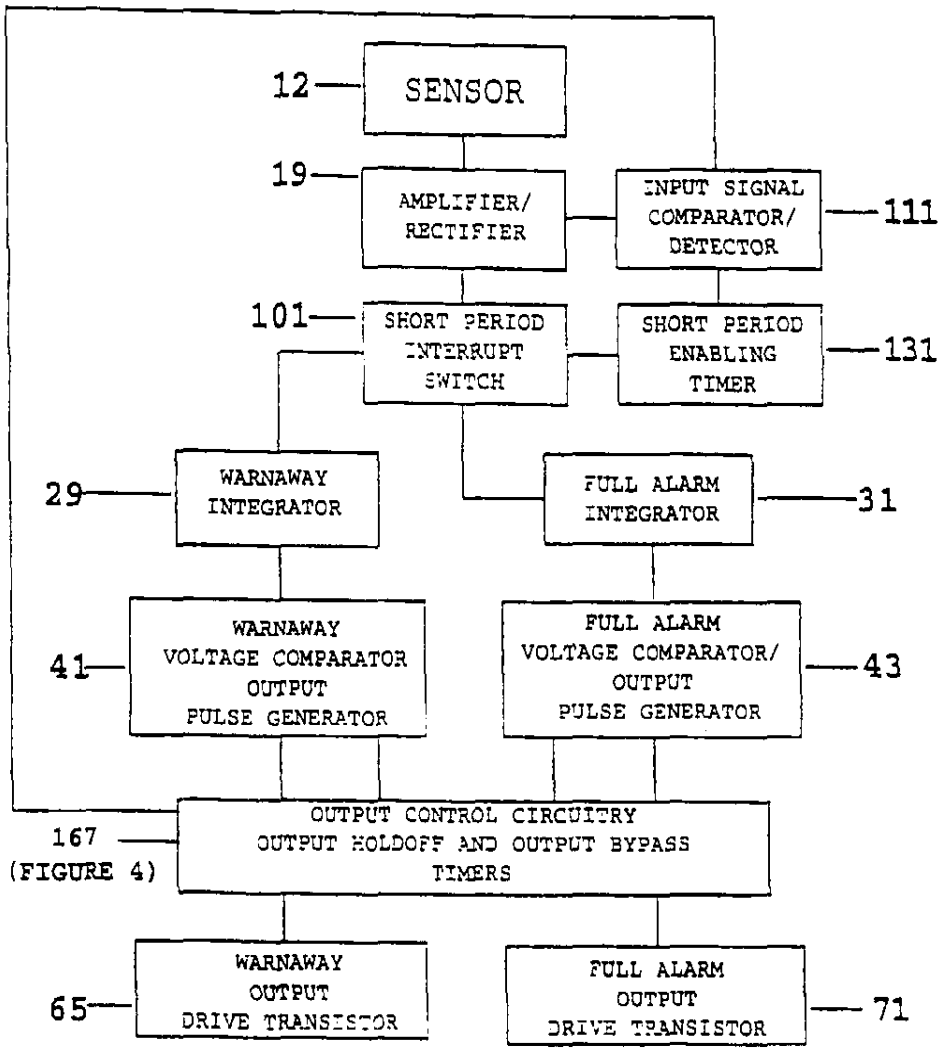
12
SENSOR
19
AMPLIFIER/ RECTIFIER
INPUT SIGNAL COMPARATOR/ DETECTOR
111
101
SHORT PERIOD INTERRUPT SWITCH
SHORT PERIOD ENABLING TIMER
131
29
WARNAWAY INTEGRATOR
FULL ALARM INTEGRATOR
31
41
WARNAWAY VOLTAGE COMPARATOR OUTPUT PULSE GENERATOR
FULL ALARM VOLTAGE COMPARATOR/ OUTPUT PULSE GENERATOR
43
167
(FIGURE 4)
OUTPUT CONTROL CIRCUITRY OUTPUT HOLDOFF AND OUTPUT BYPASS TIMERS
65
WARNAWAY OUTPUT DRIVE TRANSISTOR
FULL ALARM OUTPUT DRIVE TRANSISTOR
71

FIGURE 2

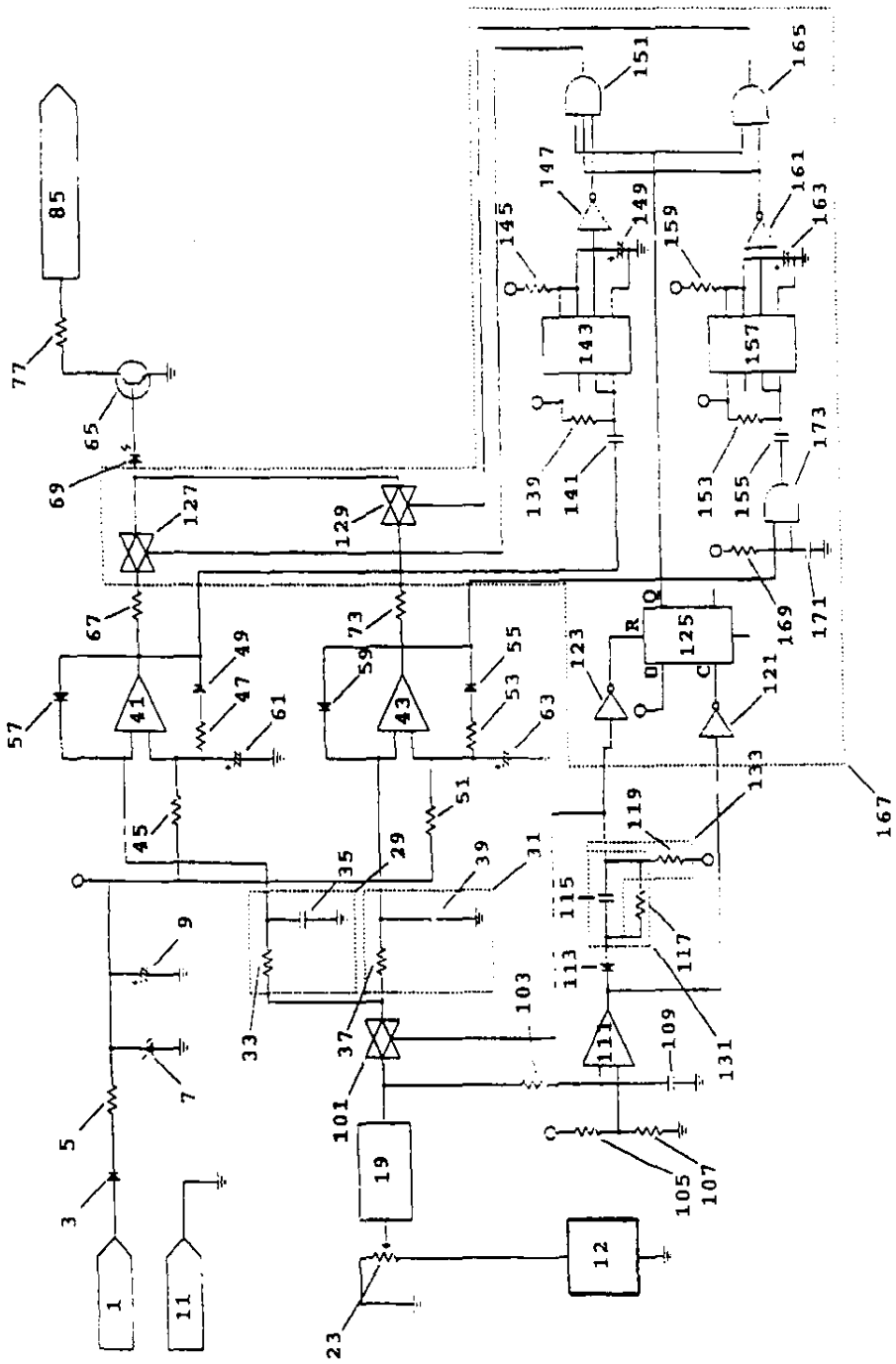
1
11
12
19
23
3
5
7
9
33
37
101
103
105
107
109
111
113
115
117
119
131
133
167
41
43
45
47
49
51
53
55
57
59
61
63
65
67
69
73
77
85
127
129
125
123
121
169
171
173
139
141
143
145
147
149
151
153
155
157
159
161
163
165

FIGURE 3

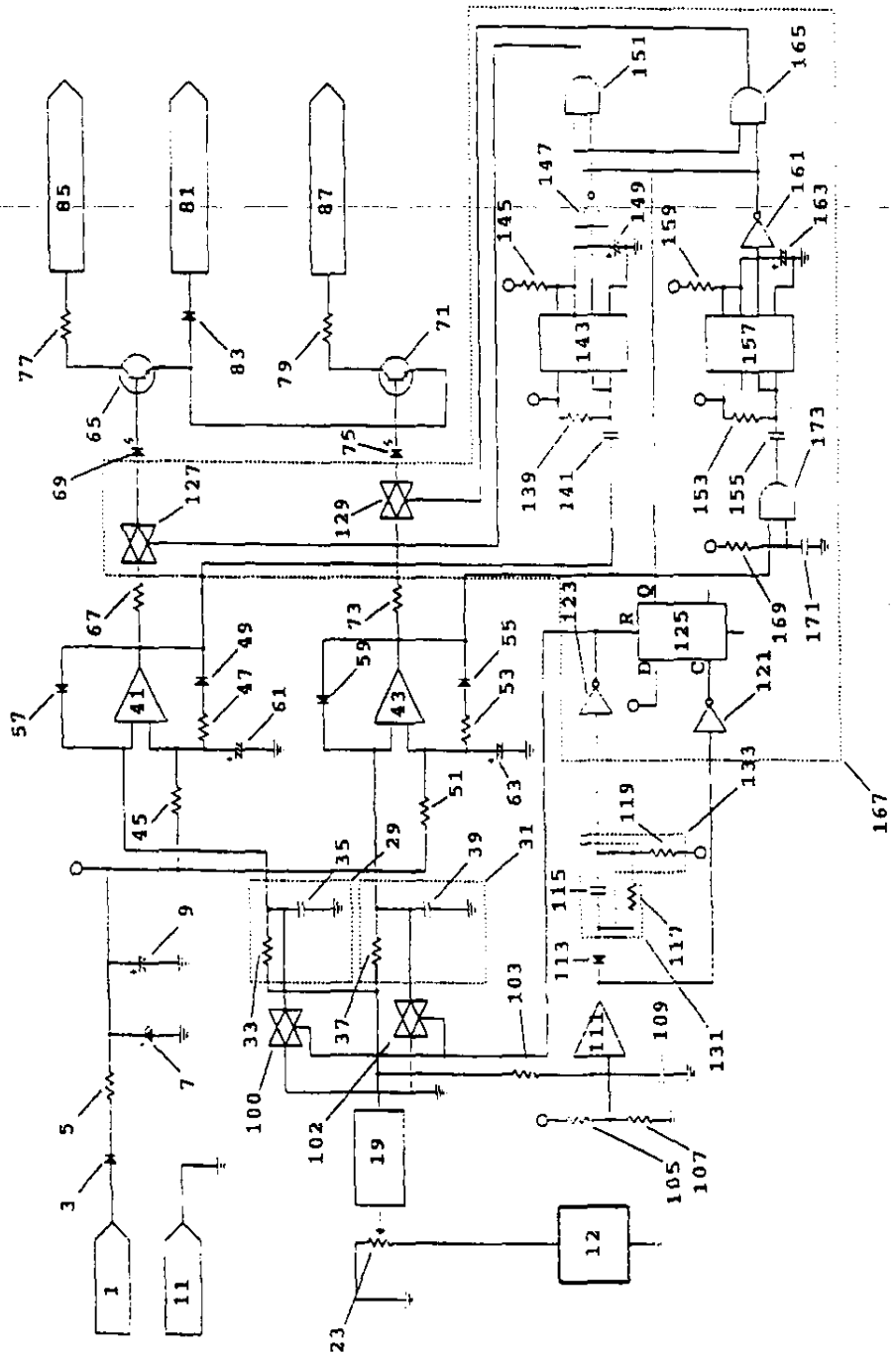

FIGURE 4

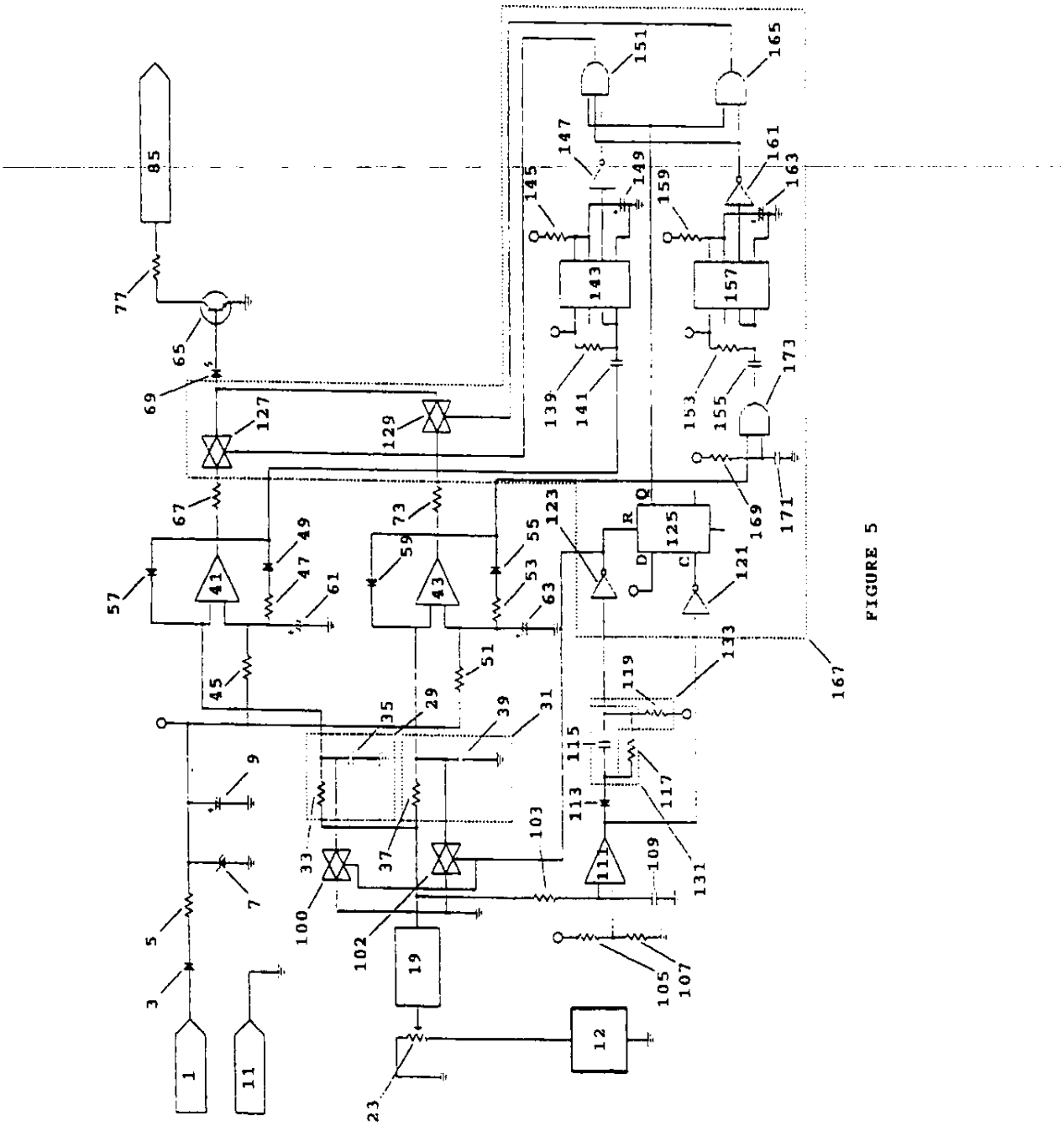

FIGURE 5

FIGURE 6

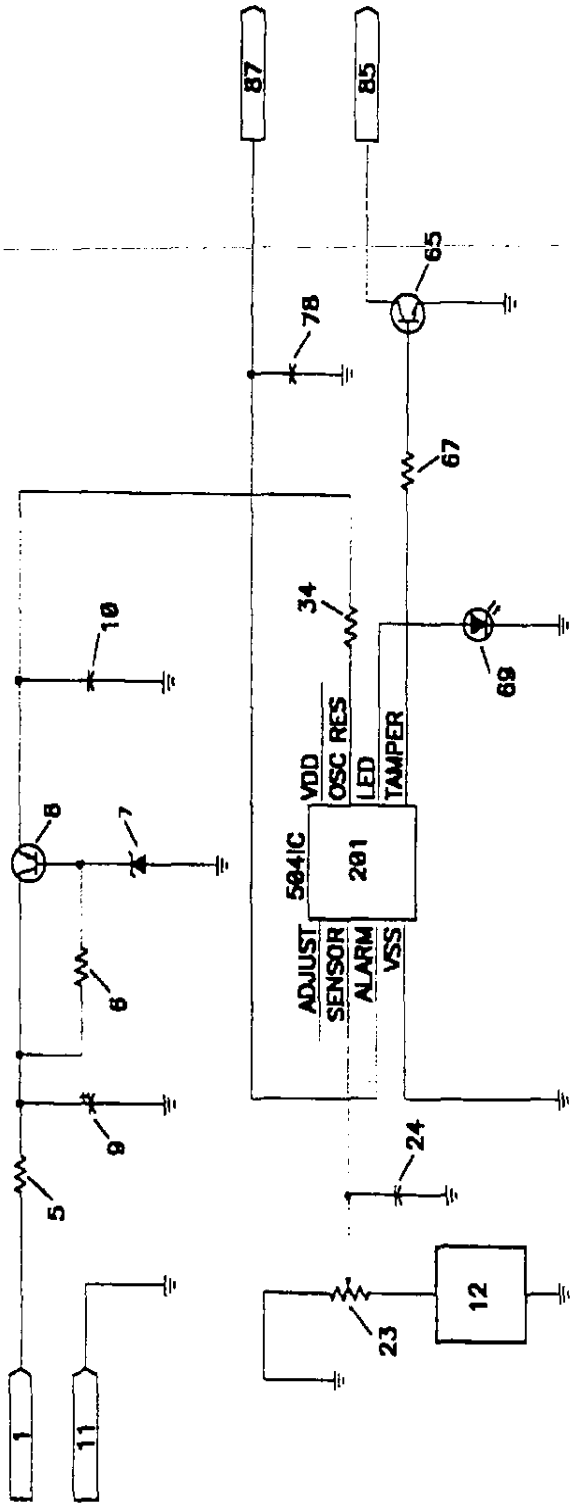
87
85
65
78
67
34
10
69
VDD
OSC RES
LED
TAMPER
8
7
504IC
201
ADJUST
SENSOR
ALARM
VSS
6
9
24
5
12
23
1
11

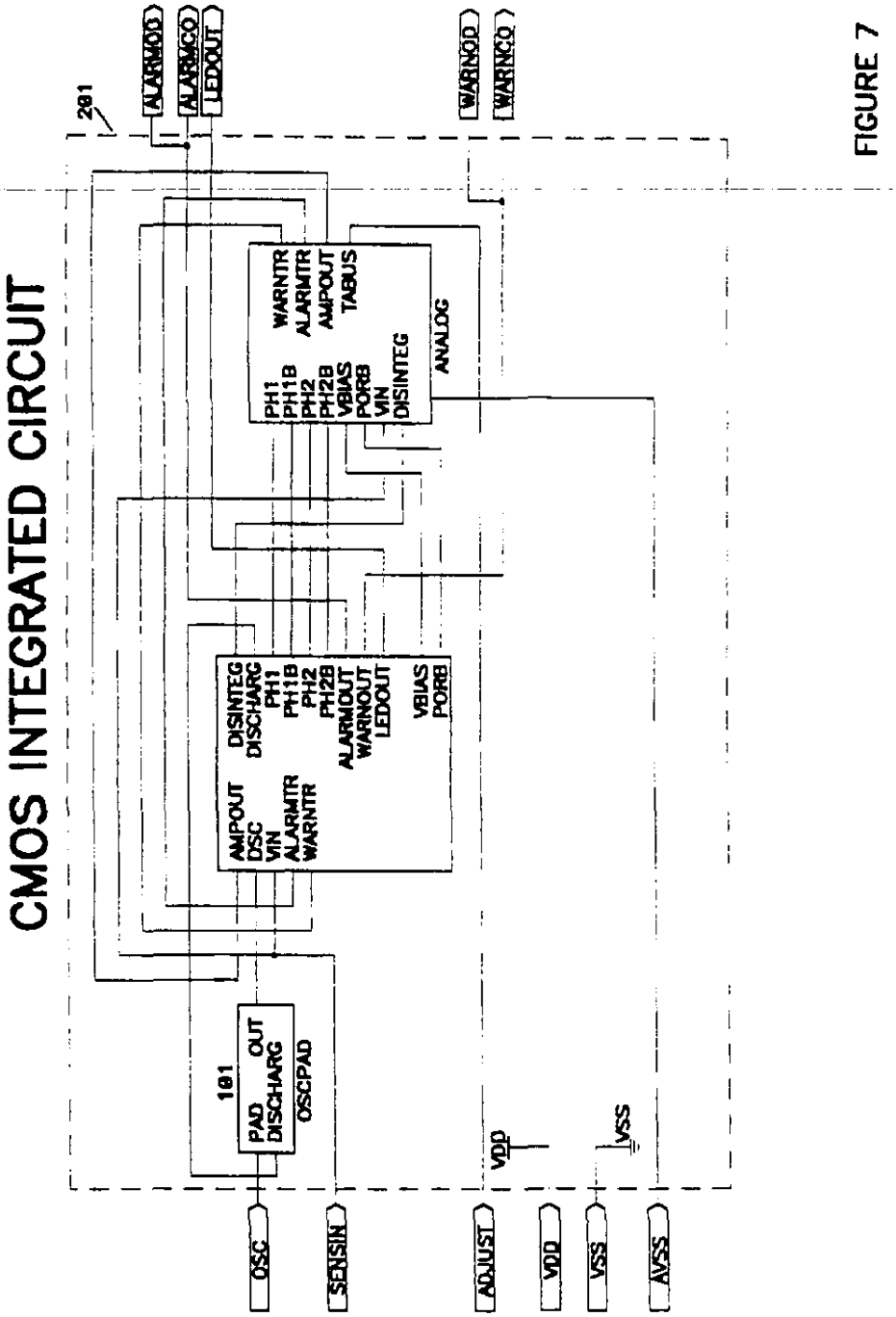
CMOS INTEGRATED CIRCUIT
201
ALARMOD
ALARMCO
LEDOUT
WARNOD
WARNCO
WARNTR
ALARMTR
AMPOUT
TABUS
PH1
PH1B
PH2
PH2B
VBIAS
PORB
VIN
DISINTEG
ANALOG
DISINTEG
DISCHARG
PH1
PH1B
PH2
PH2B
ALARMOUT
WARNOUT
LEDOUT
VBIAS
PORB
AMPOUT
OSC
VIN
ALARMTR
WARNTR
181
PAD
OUT
DISCHARG
OSCPAD
VDD
VSS
OSC
SENSIN
ADJUST
VDD
VSS
AVSS

FIGURE 7

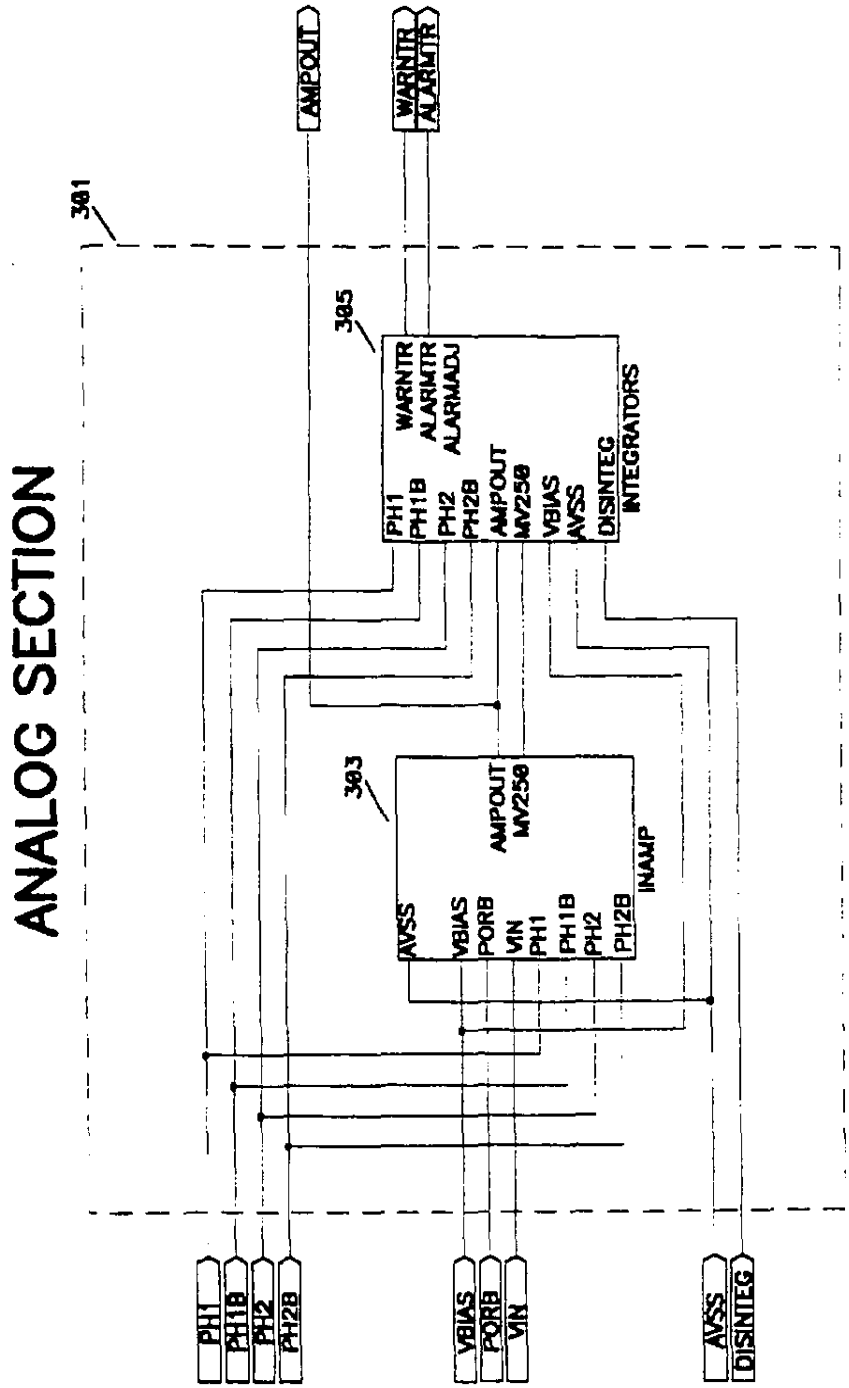
ANALOG SECTION
381
385
383
AMPOUT
WARNTR
ALARMTR
WARNTR
ALARMTR
ALARMADJ
PH1
PH1B
PH2
PH2B
AMPOUT
MV250
VBIAS
AVSS
DISINTEG
INTEGRATORS
AMPOUT
MV250
AVSS
VBIAS
PORB
VIN
PH1
PH1B
PH2
PH2B
INAMP
PH1
PH1B
PH2
PH2B
VBIAS
PORB
VIN
AVSS
DISINTEG

FIGURE 8

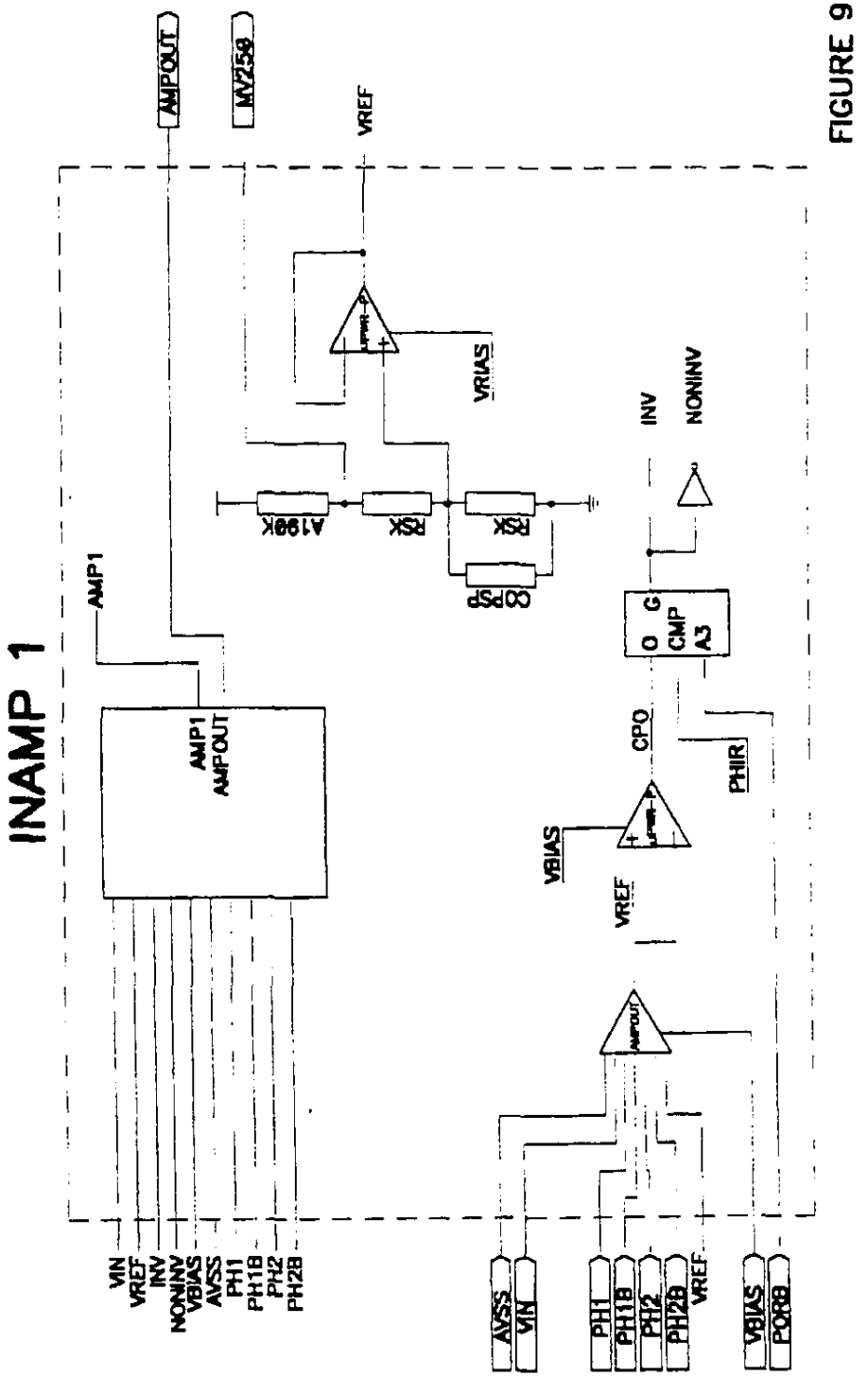
INAMP 1
AMPOUT
MV250
VREF
VRIAS
INV
NONINV
A190K
R5K
R5K
R5K
AMP1
AMP1
AMPOUT
O G
CMP
A3
CPO
PHIR
VBIAS
VREF
AMPOUT
VIN
VREF
INV
NONINV
VBIAS
AVSS
PH1
PH1B
PH2
PH2B
AVSS
VIN
PH1
PH1B
PH2
PH2B
VREF
VBIAS
POR

FIGURE 9

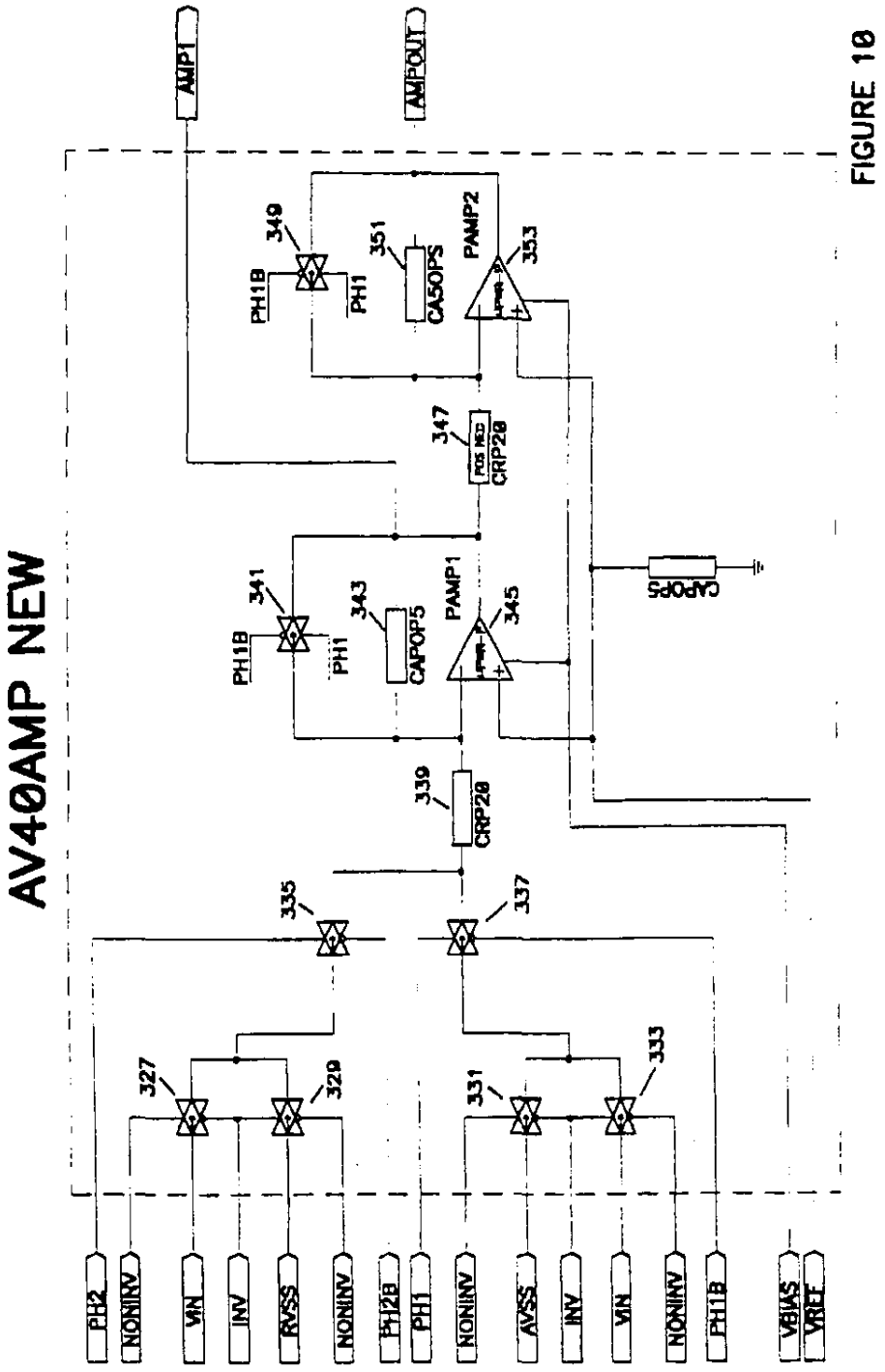
AV40AMP NEW
AMP1
AMPOUT
349
PH1B
PH1
351
CA50PS
PAMP2
353
347
CRP28
341
PH1B
PH1
343
CAPOP5
PAMP1
345
CAP0PS
339
CRP20
335
337
327
329
331
333
PH2
NONINV
VIN
INV
AVSS
NONINV
PH2B
PH1
NONINV
AVSS
INV
VIN
NONINV
PH1B
VBIAS
VREF

FIGURE 10

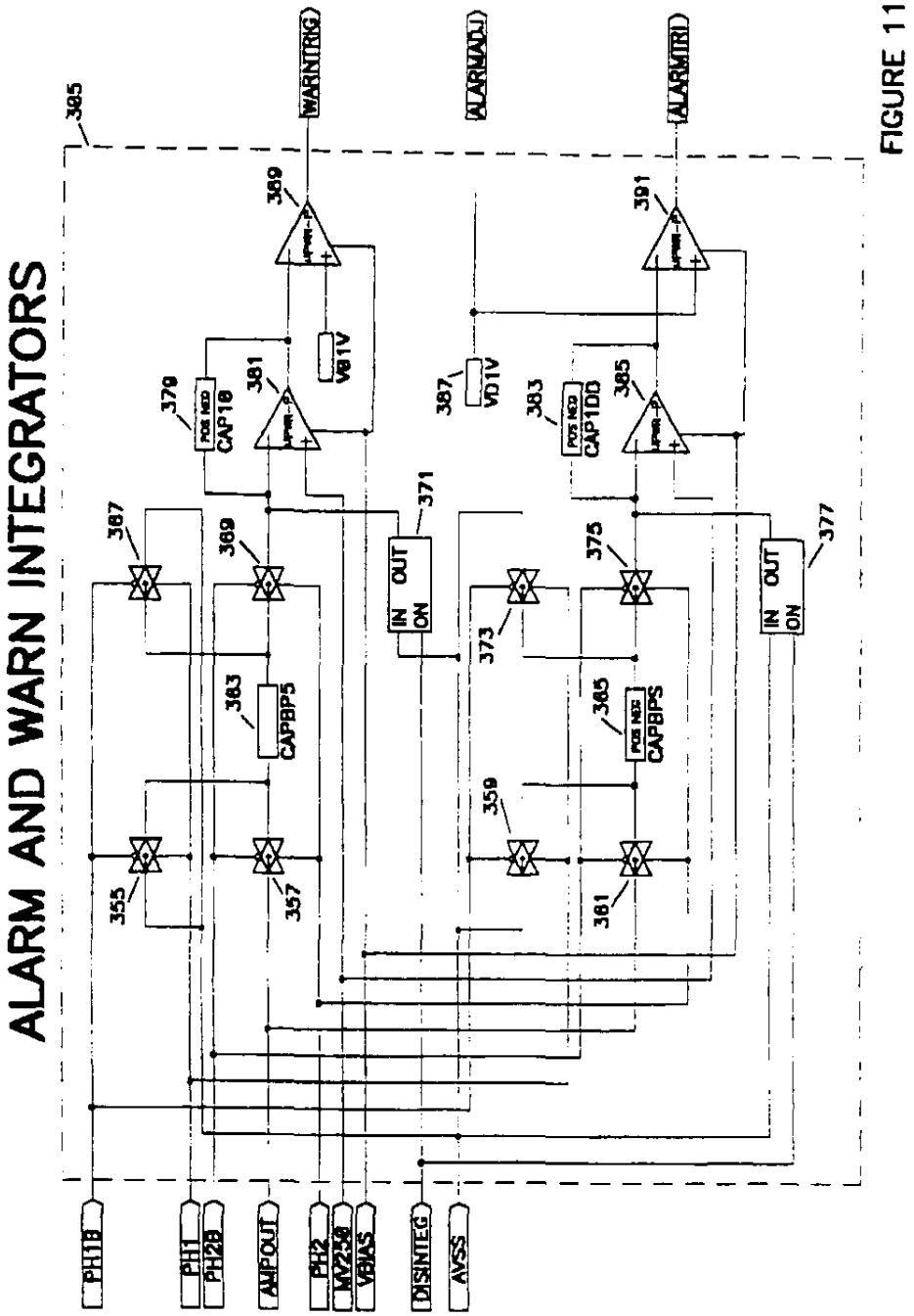
ALARM AND WARN INTEGRATORS
385
WARNTRIG
ALARMADJ
ALARMTRI
389
391
379
CAP1B
381
VB1V
387
VD1V
383
CAP1DD
385
371
IN OUT
ON
377
367
369
375
373
363
CAPBP5
365
CAPBPS
359
355
357
361
PH1B
PH1
PH2B
AMPOUT
PH2
MV250
VBIAS
DISINTEG
AVSS

FIGURE 11

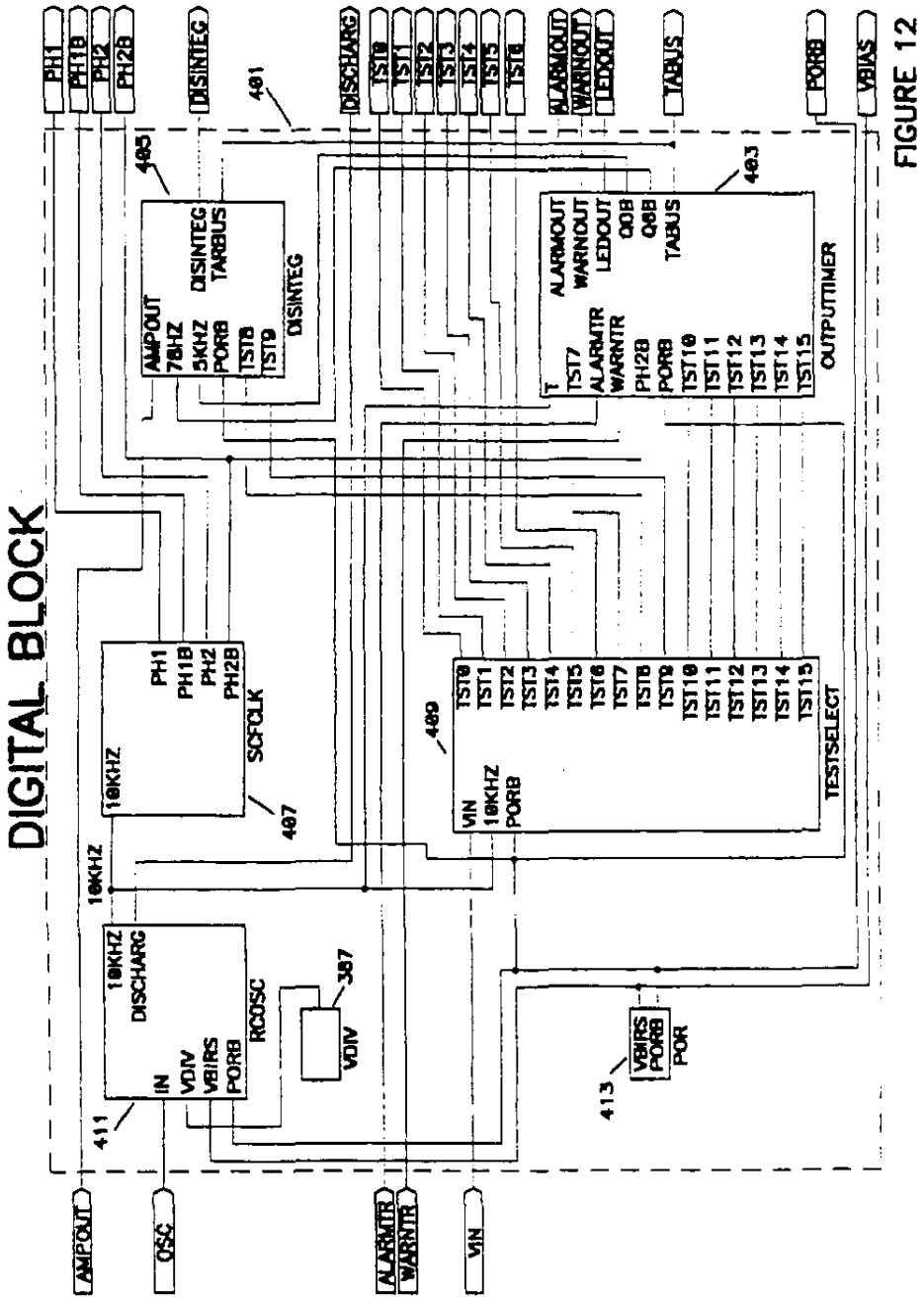
DIGITAL BLOCK
PH1
PH1B
PH2
PH2B
DISINTEG
401
DISCHARG
TST0
TST1
TST2
TST3
TST4
TST5
TST6
ALARMOUT
WARNOUT
LEDOUT
TABUS
PORB
VBIAS
405
AMPOUT
78HZ
5KHZ
PORB
TST8
TST9
DISINTEG
TABUS
403
ALARMOUT
WARNOUT
LEDOUT
Q0B
Q8B
TABUS
T
TST7
ALARMTR
WARNTR
PH2B
PORB
TST10
TST11
TST12
TST13
TST14
TST15
OUTPUTTIMER
PH1
PH1B
PH2
PH2B
SCFCLK
10KHZ
407
409
TST0
TST1
TST2
TST3
TST4
TST5
TST6
TST7
TST8
TST9
TST10
TST11
TST12
TST13
TST14
TST15
VIN
10KHZ
PORB
TESTSELECT
10KHZ
10KHZ
DISCHARG
IN
VDIV
VBIRS
PORB
RCOSC
411
387
VDIV
413
VBIRS
PORB
POR
AMPOUT
OSC
ALARMTR
WARNTR
VIN

FIGURE 12

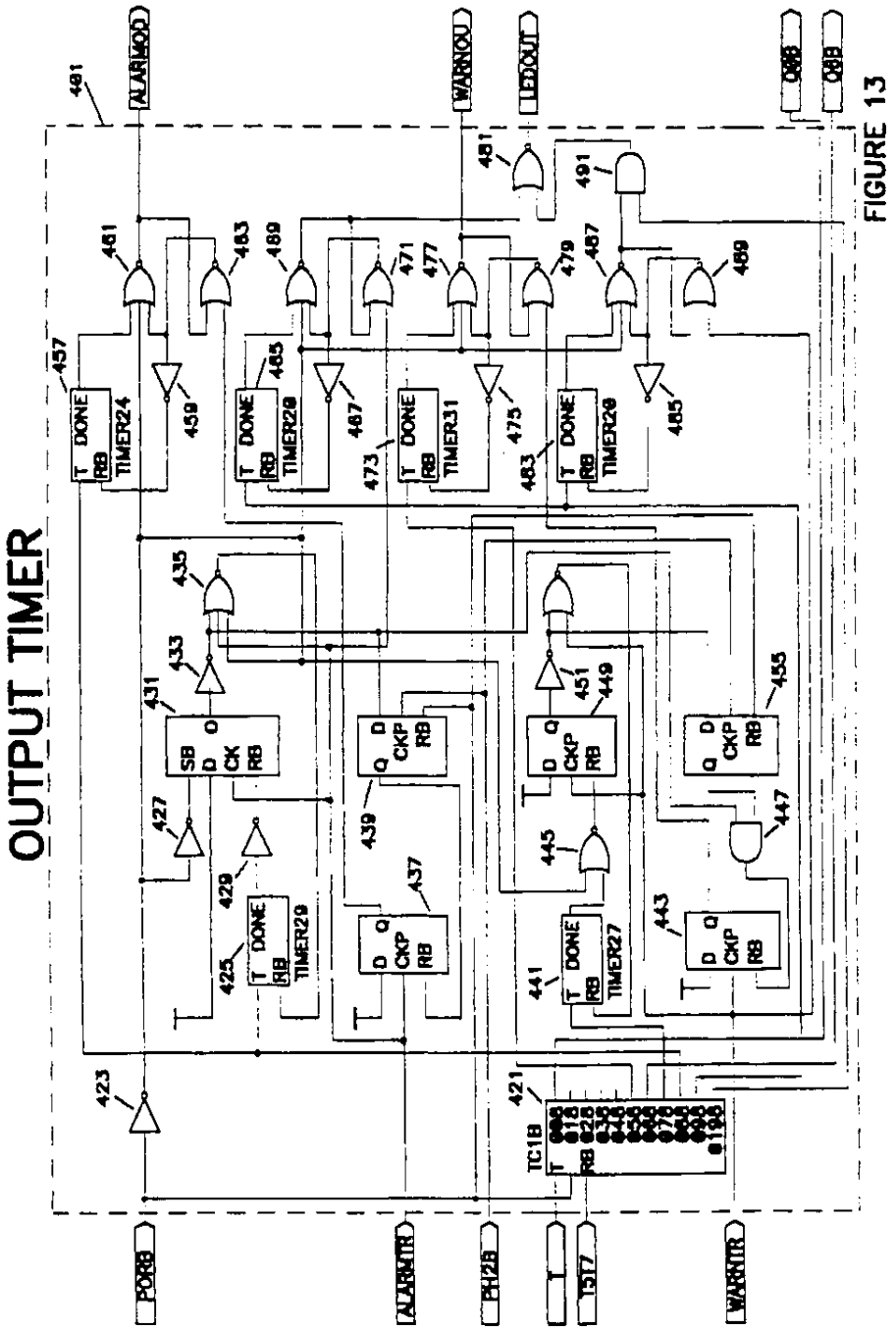
OUTPUT TIMER
ALARMOD
WARNOU
LEDOUT
PORB
ALARMTR
PH2B
T5T7
WARNTR
TC1B
TIMER24
TIMER29
TIMER20
TIMER31
TIMER27
DONE
RB
CKP
SB
CK
401
421
423
425
427
429
431
433
435
437
439
441
443
445
447
449
451
455
457
459
461
463
465
467
469
471
473
475
477
479
481
483
485
487
489
491

FIGURE 13

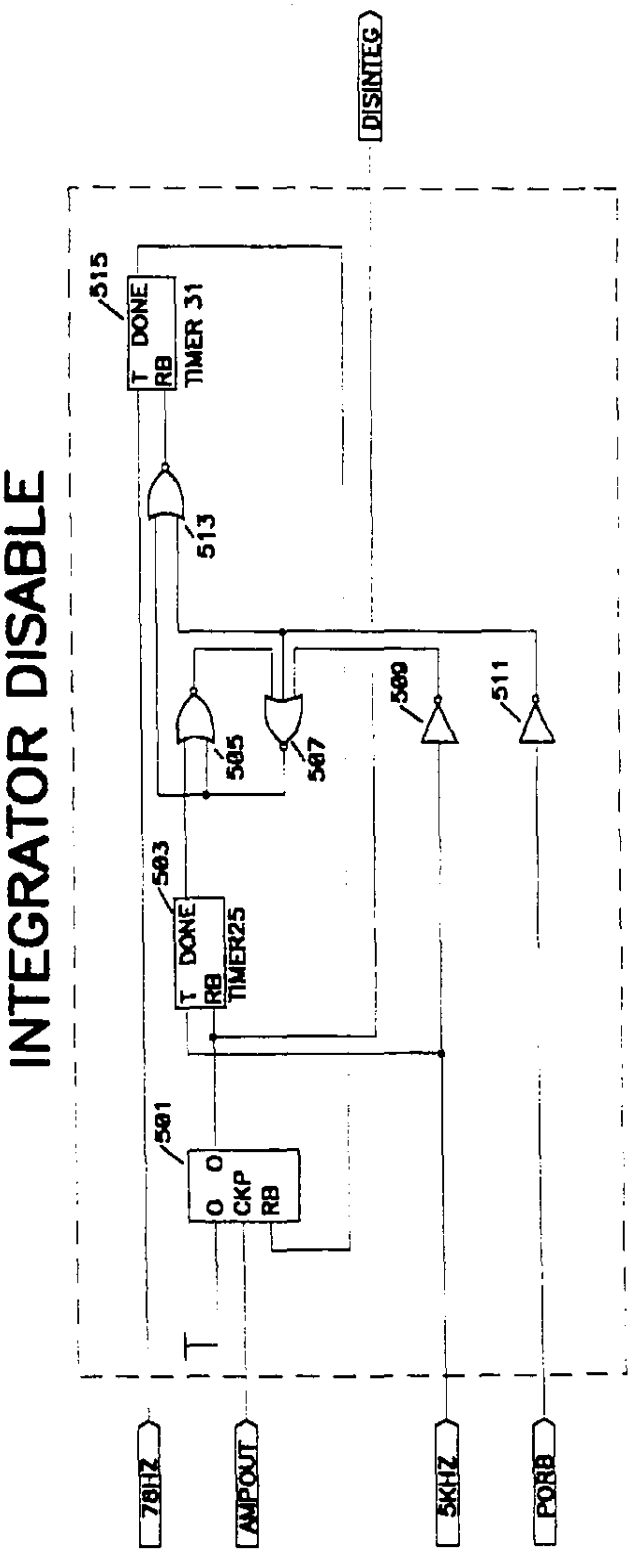
INTEGRATOR DISABLE
DISINTEG
515
T DONE
RB
TIMER 31
513
505
507
509
511
503
T DONE
RB
TIMER25
501
O O
CKP
RB
78HZ
AMPOUT
5KHZ
PORB

FIGURE 14

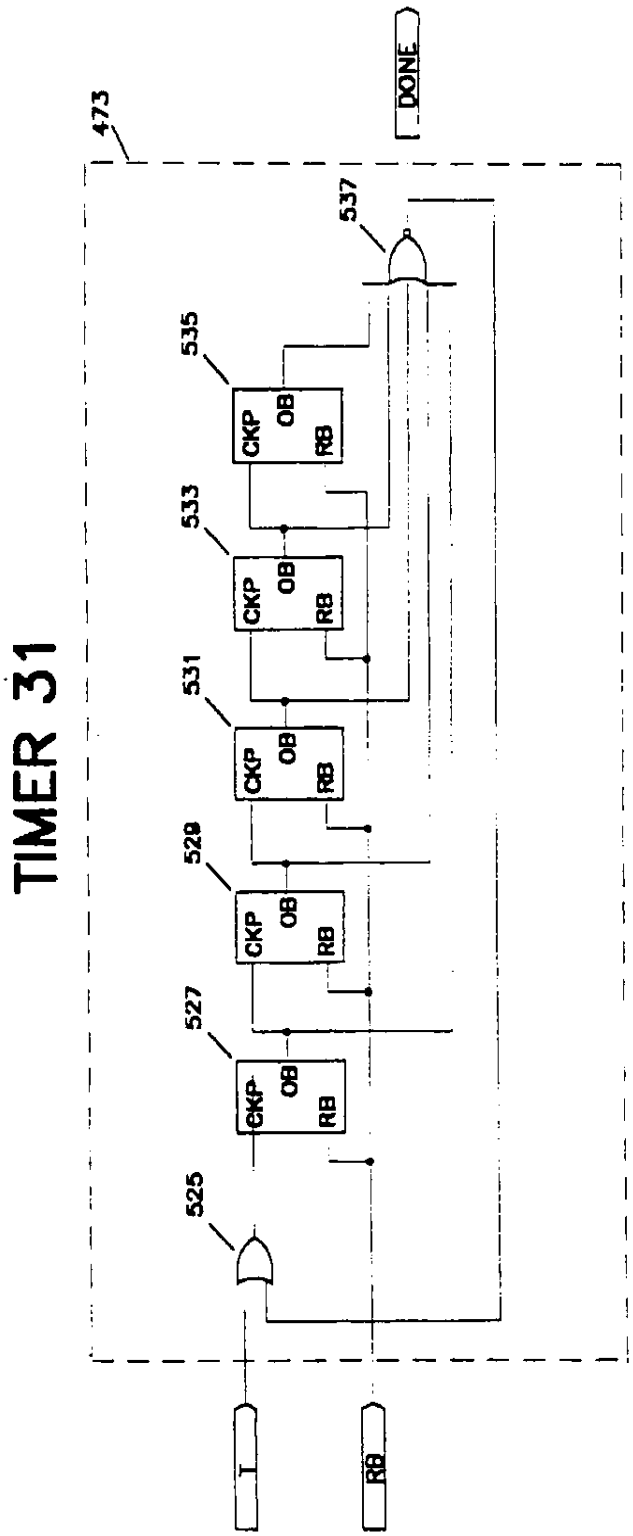

FIGURE 15

ADVANCED METHOD OF INDICATING INCOMING THREAT LEVEL TO AN ELECTRONICALLY SECURED VEHICLE AND APPARATUS THEREFOR

RELATION TO OTHER PATENT APPLICATIONS

This patent application is a continuation-in-part (C-I-P) of patent application Ser. No. 08/433,819 filed May 4, 1995, entitled "Method Of Indicating The Threat Level Of An Incoming Shock To An Electronically Secured Vehicle and Apparatus Therefor," now abandoned; which is a continuation-in-part (C-I-P) of patent application Ser. No. 08/112,940 filed Aug. 30, 1993, entitled "Method Of Indicating The Threat Level Of An Incoming Shock To An Electronically Secured Vehicle and Apparatus Therefor," now U.S. Pat. No. 5,532,670; which is a continuation-in-part (C-I-P) of patent application Ser. No. 07/886,871 filed May 22, 1992, entitled "Method Of Indicating The Threat Level Of An Incoming Shock To An Electronically Secured Vehicle and Apparatus Therefor," now abandoned. This patent application is also a continuation-in-part (C-I-P) of patent application Ser. No. 07/945,667 filed Sep. 16, 1992, entitled "Advanced Automotive Automation And Security System," now U.S. Pat. No. 5,534,845 Aforementioned U.S. Pat. Nos. 5,532,670 and 5,534,845 as well as applications Ser. Nos. 07/886,871 and 08/433,819 are hereby incorporated by reference.

BACKGROUND OF THE INVENTION

1. Field of the Invention

This invention pertains to the field of electronic security systems that detect unwanted intrusions into secured areas and sound an audible alarm in response thereto. More particularly, the invention pertains to a method of differentiating between a high degree of intrusion or threat such as a shock or a low intensity degree of intrusion or insubstantial threat, received by the protected structure or object, and executing an appropriate alarm as well as preventing nonphysical, random energy inputs from tripping the security alarm.

2. Description of the Prior Art

Electronic security systems have been used for some years and their popularity increases as the national crime rate continues to climb. Most such systems, especially those used for protection of automobiles, include a controller, a series of intrusion sensors for detecting attempted intrusions through doors, hood, and windows, an alarm for activation upon receipt of a signal or signals from the sensors indicating an attempted unwanted entry into the vehicle, and a power source, normally the vehicle battery, to power the system and sound the alarm. Other components are often included such as automatic resetting circuits and shut-down devices for use when the alarm needs to be deactivated. These systems may be original equipment on new vehicles or retrofitted on existing vehicles.

The security systems may be effected by a nonphysical signals, or electrical surges commonplace in the automobile circuitry. The intended arming and disarming of an alarm system is usually performed by sending a digitally coded signal, by a hand-held transmitter operated by one or more push buttons. In addition, other such systems may be armed by mere passage of time following the driver's act of turning off the engine and exiting the vehicle with the doors and windows closed and after a short time interval such as thirty (30) seconds. Thereafter the system may be disarmed by a hand-held transmitter or by a delay circuit that activates the alarm if the system is not disarmed by the driver upon entry into the vehicle. The first type of arming is known as "active arming" while the latter is known as "passive arming".

Upon detection of an attempted intrusion into the vehicle by one of the sensors, the alarm is activated for a period of time, for instance thirty (30) seconds to one (1) minute, and then, if the alarm has not been disarmed by the remote transmitter or by the manipulation of a "kill" switch, mounted interior the vehicle, usually in a hidden area therein, the alarm response terminates or times-out and the security system is once again reset to monitor the sensors and triggers.

One form of such a sensor is called a "shock" sensor. The shock sensor technology of this invention is discussed in Applicant' patent application Ser. No. 08/112,940. However, a number of other sensors may be employed within the alarm system of this invention. This invention includes, but is not limited to, the application of shock sensors, motion sensors, field disturbance sensors, sound discriminators, ultrasonic sensors, current sensors and other sensors which sense disturbance or threat applied to or about an area and generate an electrical signal in response thereto. An incoming threat to the protected area such a vehicle includes threats such as physical impact, activity in or about the vehicle, breach of the vehicle electric system, the sound of breaking glass, or other activity results in the sensing of the activity and generation of an electrical signal which is then interpreted by the alarm controller to generate an alarm response.

Certain problems exist with conventional security systems that render their usage less than desirable under certain circumstances. For example, a shopping cart inadvertently bumped against the vehicle will usually cause a full alarm response. While the alarm is certainly necessary to alert the owner, inadvertent tripping of the alarm is annoying and could result in either the owner becoming frustrated, and thereafter not activating the alarm, or convincing the shopper or other car owners that such a loud, annoying alarm is not what they want in their vehicles.

In other situations, certain transient electric fields can invade the circuitry of the alarm system and generate enough of a signal to trip the alarm even in the absence of intrusion to the secured area. When a warn signal is generated by the alarm, it flashes the running lights which generates electrical surges or transients. These transients may generate electrical signals which may feed into the alarm circuitry where they are amplified and trip full alarm. In other situations, such as where a cellular telephone is used about the vehicle, the initial surge of the wireless transmission signal may be sufficient to generate an actuation level signal resulting in the activation of the alarm. Still further, in isolated cases, such as where a police car parks behind a protected area and the officer "keys" the microphone on his radio, the surge from his transmitter could interact with the anti-theft system induction coil and produce a false alarm.

Still further, there are instances where a disturbance continues unabated after the initial activation of the alarm sequence. For instance, a vehicle parked next to a train station may receive an alarm input generated by a passing train. The alarm will commence and terminate after running its course, yet often the train has not passed completely by the vehicle. In the prior art, the alarm will sound again because of the continuous input of energy from the train. This can be of annoyance to others in the area.

Crowded parking lots are prime areas for car theft. In these cases, dissatisfaction with the anti-theft system may

cause the owner to cease arming the system thus rendering the vehicle subject to theft. This condition, if not corrected, may cause other vehicle owners to cease purchasing such security systems for fear of annoying others and thereby undermine the desirability for and effectiveness of anti-theft devices.

What is needed to circumvent the drawbacks heretofore described is (1) a vehicle security system capable of differentiation between a light, generally non-threatening intrusion event and a stronger, usually security-threatening intrusion event to the vehicle and output a pulse to the alarm circuit appropriate to the degree of intrusion about the secured area, and (2) a vehicle security system that will discriminate between the non-threatening events and block them or otherwise divert the signals they produce so that an alarm is not generated.

SUMMARY OF THE INVENTION

This invention is a novel method of dealing with these problems and discriminating between the degree of threat from the incoming intrusion sensors. For example, the alarm system of this invention generates a mild audible chirp in the event one lightly touches a protected vehicle while loading groceries in a parking lot. Conversely, a full alarm response is generated if the car is towed or a crow-bar applied to its exterior. The low intensity alarm is called a "warn-away" and is of a serious, but far quieter nature and will generally generate the proper message of alarm presence to the intruder without engaging the full alarm. The person inducing the threat is thereby quietly, but convincingly advised by prerecorded voice or a series of soft chirps of the limited intrusion he or she has caused, without activation of ear piercing audible alarm response. Further, the owner and other people are not disturbed or embarrassed by a full alarm response caused by an innocent individual.

In addition, this invention includes the novel feature of providing full wave rectification of the output signal from the sensor and ignoring the first few milliseconds of the signal produced. Additionally, the present invention requires the signal to drop to its zero (0) level or reference voltage before triggering warning alarm. This allows an alarm condition to be registered only upon sensing actual intrusions on or about the protected area, as compared with non-physical intrusions generated by EMF or RF fields about the protected area. These features therefore eliminate the spurious signals that are produced by nonphysical threat conditions.

Most security systems involve only half-wave rectification of the induced signal emanating from the sensor. In the event the signal generated by a sensor generates a signal having positive and negative components the signal and in the event there is only partial rectification of the signal. The resulting rectified signal would be of unnaturally low value and not be an accurate reproduction or indication of the full *intensity or degree of the incoming threat to the protected* area. This practice is consistent with sensors employed to trigger the alarm system, but is unacceptable to the present invention which looks at the degree of the intrusion. Thus, to determine the degree of the intrusion sensed by a sensor, the present invention analyzes the peak to peak value of the sensor signals to determine the true degree of intrusion.

The method and apparatus disclosed herein analyzes the signal produced by various sensors having the capability of generating an electric signal upon sensing an intrusion event. Depending on the strength or value of the sensor signal, a mild or low intensity degree of intrusion generates a pulse having a short pulse-width generating a warn-away alarm that will automatically reset itself without requiring intervention by the vehicle owner. The same method and apparatus is capable of generating a longer pulse-width pulse which generates both a mild, warn-away alarm response as well as a stronger, full alarm response.

When the low threat level, "warn-away" pulse is generated by the alarm system, the alarm system of this invention continues to monitor its sensors and is capable of immediate activation of a full alarm upon sensing a high degree of intrusion as reported by one or more of its sensors, even while a warn-away alarm is being given. If two or more mild shocks are received by the vehicle within a finite time period, seven (7) seconds for example, the system will produce a full alarm, whereas if the mild shocks are repeated on a sequence longer in time than seven (7) seconds, a second and repeated "warn-away" alarm will be produced again.

The prior art alarm system have not yet appreciated these features and continue to generate repeated "warn-away" or full alarms. In fact, in some cases the energy dispensed in the "warn-away" alarm is of sufficient magnitude to generate a low-threat level input that triggers another "warn-away" alarm so that the system continues to cycle "warn-away" alarms each induced by the preceding alarm.

Further, this invention contains the unique property of ignoring the first few milliseconds of signal produced by a sensor. A real threat condition usually lasts far longer than the ignored duration and the energy level of the residual signal is sufficient to pass through an integrator to a comparator to determine the relative degree of the threat. The signals produced by RF bursts, EMF bursts and other non-threatening or non-physical phenomenon typically do not last beyond that period and still cause a threat situation. Accordingly, those signals produced by non-physical and/or non-threatening phenomenon will be disregarded and will not cause the alarm systems to enter into an alarm condition.

To overcome the problem of repeated sirens during periods of extended sensor input, such as in the train passing example, or even when a truck or other heavy vehicle passes the parked car, means are provided to prevent repeated alarms as long as the initial input remains within a given intensity for an extended time. For instance, as long as the intensity level of the input signal remains rather constant following cessation of the full alarm signal, the circuit will not process another sensor input until this signal disappears and reappears again. This means that the prolonged motion the train passing nearby a protected vehicle, which generates a sensor input, will not cause the alarm to sound again and again. This feature also prevents continuous alarm outputs in those cases where the sensor is in a state of a continuous output. The state of continuous sensor output may be mechanical in nature (the train example) or from electrical disturbances.

In a second embodiment of this invention, the circuit is designed such that fewer wires need be used to attach the sensor to the alarm giving rise to a savings in material and reduction in installation time and training.

The prior art has recognized some of these problems, however, to date there has been little success achieved in solving them. In the patent to Hwang, (U.S. Pat. No. 5,084,967) a "motion detector" is allegedly connected to a pair of signal amplifier circuits that, upon receipt of a long signal or a series of short pulses from the detector, will sound a "full" alarm whereas, upon receipt of a shorter pulse signals, will sound a "pre-entry warning", lesser in severity

than the "full" alarm. However, this patent discloses that the "detector" is a time-dependent switch. Therefore the degree of threat is determined by its duration, not its physical degree. The schematic of the Hwang device shows the use of components that are arranged as a switch to turn on and off a transistor to allow the detected signal pass on to the alarm warning device. Thus, there is no comparison of the "level of intensity" of the signal, but merely the "duration" of the signal. This is not an accurate assessment of the degree of threat sensed by the sensor and reproduced into an electrical signal and does not differentiate between "intensities" of the physical and non-physical inputs. Moreover, the output signal from the device of Hwang Patent proceeds directly to the siren, whereas the device of the present invention interposes another device, the alarm control module or alarm controller, that determines what level of alarm is generated.

Accordingly, the main object of this invention is a method and apparatus for use on about an electronically secured area that responds differently to different degrees of threat sensed by the sensors arranged therein. Other objects of the invention include a method and apparatus that has at least two levels of intensity determination, one for a low degree of threat received by the vehicle to produce a pulse that may be used to trigger a warning of a stronger alarm, should the threat not be discontinued, and a separate pulse that may be used to trigger a stronger, louder alarm for non-discontinued light shocks and stronger shocks; a method and apparatus for producing a pulse that may be used to trigger a warn-away audible alarm that may be repeatedly sounded to signify the vehicle is under electronic security while not producing a pulse that may trigger the loudest alarm so as to minimize the disturbance to those nearby in the event of a non-threatening disturbance received by the vehicle; a method and apparatus that maintains readiness to produce a pulse that may be used to trigger an audible alarm even while a warn-away alarm message is being used; a method and apparatus for detecting a signal produced by a non-physical assault on the vehicle, such as by a burst of RF energy or EMF energy, and for removing it from interaction in the system circuitry; a method and apparatus that provides full wave rectification of the induced signal to provide a more accurate analysis of the threat inducing the sensor signal; an apparatus which does not continue to sound an alarm in the event a generally constant and continuous disturbance such as a moving train; an apparatus having the ability to communicate the level of threat in a pulsewidth of the sensor output pulse, thereby eliminating a dedicated wire connection for each alarm stage; an apparatus that may be retrofitted into existing vehicles as well as included as original equipment on new vehicles; and, an apparatus that will automatically rearm upon the completion of a measured length of the warn-away or the full alarm; circuitry that can be maintained in an integrated circuit thereby providing economy of manufacture, improved reliability, space savings and less power consumption. These and other objects of the invention may be obtained by reading the following specification along with the drawings that are appended hereto. The protection sought by the inventor may be gleaned from a fair reading of the claims that conclude this specification.

DESCRIPTION OF THE DRAWINGS

FIG. 1 is a schematic diagram of the apparatus of this invention;

FIG. 2 is a flow diagram illustrating the operation of the apparatus generally depicted in FIG. 1;

FIG. 3 is a schematic diagram of an alternate embodiment of the apparatus, showing less wiring needed to accomplish the same functions as shown in FIG. 1;

FIG. 4 is a schematic diagram of an alternate embodiment of the bilateral switch wiring shown in FIG. 1;

FIG. 5 is a schematic diagram of an alternate embodiment of the bilateral switch wiring shown in FIG. 3;

FIG. 6 is a top level schematic representation of an alternate embodiment of this invention;

FIG. 7 is a top level block diagram of CMOS Integrated Circuit and its analog and digital sections;

FIG. 8 is an intermediate level block diagram of the analog section, showing the amplifier block and the integrator block;

FIG. 9 is a schematic/block diagram of the amplifier block and its inverting/noninverting determination circuitry;

FIG. 10 is a schematic diagram of the amplifier block;

FIG. 11 is a schematic diagram of the warnaway alarm and full alarm switching capacitor integrators and their associated circuitry;

FIG. 12 is an intermediate level block diagram of digital section, showing its major blocks therein;

FIG. 13 is a schematic of output timer block having six timer blocks, timer clock divider block and the associated circuitry required to support the timing of the IC;

FIG. 14 is a schematic of the integrator disable control circuit; and,

FIG. 15 is a schematic of one of the five stage "T-flip-flop" timers that is used in IC.

DESCRIPTION OF THE PREFERRED EMBODIMENT

The novel method of this invention for indicating the threat level of an incoming threat to an electronically secured structure, such as a vehicle comprises, the steps of sensing a threat delivered to an area, generating an electric signal the strength of which is proportional to the intensity of the threat, ignoring the first portion of the signal so as to remove from further consideration those disturbances that are non-physical or non-threatening, analyzing the remaining signal to determine if it is of a low, generally non-threatening intensity or of a higher, generally security-threatening intensity, and producing either a first pulse that triggers a low intensity "warn-away" alarm, or separate first and second pulses, representing a signal containing both the low intensity and higher intensity components, that trigger both a low and a high intensity alarms. The step of generating an electric signal includes generating an alternating current signal whose amplitude and period is proportional to the intensity of the physical shock. FIG. 1 shows the apparatus of this invention.

In FIG. 1 the solid lines between components refer to conductors and will not be individually numbered except where necessary. Where conductors cross and the intersection is marked with a dot or period, it is a junction; where one conductor crosses another and the intersection has no dot or period, there is no junction. As shown in FIG. 1, an input voltage, generally in the range of from about six to about eighteen volts d.c. is inputted from a battery (not shown), such as a car battery or other source of direct current, to an input terminal 1. The current is regulated by a reverse flow protection diode 3, a surge limiting resistor 5, an over-voltage protection Zener diode 7 and a filter capacitor 9 to produce a steady flow of direct current. The ground return enters at input terminal 11.

The sensors employed by the present invention are interchangeable. Different sensors are employed for different functions within the alarm system and their selection depends in large by the anticipated environment within which the user expects to keep the protected property. Some of the more common sensors are shock sensors, motion sensors, field disturbance sensors, sound discriminators, ultrasonic sensors and current sensors. The shock sensors known in the art are mechanical, mercury movement, magnetic induction, and piezo types. Applicant' patent application Ser. No. 08/112,940 disclosed Applicant's preferred embodiment of the shock sensor.

Mechanical shock sensors use a weighted cone at the end of a spring which makes electrical contact with a fixed pointer upon an impact, creating an output pulse.

Mercury sensors consist of two designs. The first design is the mechanical contact type. The second design is one in which mercury is suspended inside an inductor that is part of an electronically tuned circuit. In both designs an impact results in the mercury remaining in a fixed position, while everything else moves about with the impacted vehicle.

The magnetic induction shock sensor uses a magnet suspended by an elastic band such as rubber, silicon or spring near a high value inductor. The inductor usually has an iron or ferrite core. An impact moves the sensing inductor while the magnet remains fixed, creating an impact AC signal in the inductor. The signal is typically amplified, detected, integrated and then compared with preset levels to determine whether or not to generate an output signal.

The piezo shock sensor uses a weighted piezo sensor. A mechanical resonance of approximately seventy (70) hertz is created by adding mass to the piezo sensor. This aids in the detection of impacts to the vehicle. Similarly, the weight remains fixed while the balance of the piezo sensor moves about with the impact to the vehicle.

Another type of sensor employable by this invention is a motion sensor. Motion sensors sense very slow movements of the vehicle. These movements could be caused by jacking, lifting, moving, or any other type of slow movement of the protected object. These movements may be sensed by several methods such as a weighted pendulum with mechanical or electronic contact, mercury movement switch or mechanical/electronic movement sensing devices, or any other slow movement sensing system.

Another type of sensor employable by this invention includes a field disturbance sensor. Field disturbance sensors sense motion of objects such as the human body in a microwave radio frequency field in or about the protected area. The presence of the moving object disturbs the microwave field and creates a disturbance therein. This results in a change of the sensor output signal. This disturbance is both reflective and absorptive in that all objects absorb and reflect RF energy. A multichannel sensor generates an output signal proportional to intensity of the detected disturbance. A single channel sensor only generates a signal if the present threshold is exceeded. Additionally, a pulsed microwave signal could be generated to look for time of signal return. This, however, requires a more complex sensor and circuit than the above field disturbance sensor.

Another type of sensor employable by this invention includes a sound discriminator. Sound discriminator senses a high frequency sound disturbance in or near the protected area and is normally used to sense the breaking of glass and/or metal to metal sounds. The sensor normally uses an electric condenser microphone to sense the sound and convert it to an AC signal. This AC signal is amplified and processed through a high pass and/or band pass filter(s). The signal is then detected and compared to preset thresholds. An output pulse indicative of the intensity of the disturbance is then generated and output.

Another type of sensor employable by this invention includes an ultrasonic sensor. An ultrasonic sensor can work on the same principle as the field disturbance sensor (doppler frequency shift), but uses an ultrasonic sound field instead of an RF energy field. In a second embodiment, the sensor uses an ultrasonic sound generator (transmitter) to set up a field of sound waves usually at forty (40) kilohertz. An ultrasonic sensor (receiver) then detects any disturbance. This signal is then amplified and detected generating an output pulse or pulses according to the level of disturbance. In a third embodiment, the ultrasonic sound could be pulsed to measure the movement of and distance to the object creating a disturbance.

Another type of sensor employable by this invention includes a current sensor. Current sensors sense the change in battery voltage caused by the activation of devices which in turn produces a current load. There are at least two different types of current sensors. One type senses only small changes in voltage created by any load being turned on, while the second type detects a sudden large change in voltage, such as a surge created by incandescent lights being turned on. The first type of sensor is simpler and easier to manufacture, while the incandescent light sensor does not require an external input to disable the circuit when the vehicle automatic electrical cooling fans turn on. The current sensor is usually employed to sense the under hood, trunk, and/or dome lights turning on when an unauthorized entry is made.

Each and every sensor heretofore mentioned senses a particular type of intrusion and produces an electrical signal proportional to the degree of threat sensed. Other types and kinds of sensors capable of sensing particular conditions and providing an electrical signal in response thereto are not mentioned, but are contemplated within the scope of this invention. The above mentioned sensors will be collectively referred to as sensor means **12**.

The step of analyzing the signal to determine if it is of a low or high intensity includes the first step of passing the signal through a switching capacitor amplifier **19** to provide full wave rectification, i.e., the negative portions of the signal are converted to positive portions. Accordingly, the output of amplifier **19** is always positive and will give an approximately equal output regardless of the polarity of sensor means **12** signal. This overcomes the shortcomings of a sensor having a signal operating in the positive and negative region in respect to the system ground. This allows the entire dynamic range of the signal to be offset/rectified to a positive voltage. The gain of amplifier **19** is fixed at a predetermined value. A potentiometer **23** is used to adjust the level of the input from sensor means **12**.

A normally closed, analog, bilateral switch **101** is provided and connected between amplifier **19** and an inverting comparator **111**. In other embodiments of the invention comparator **111** is not inverting. It is opened for a predetermined amount of time such as a few, i.e., 5, milliseconds at the beginning of each pulse string, as will be hereinafter more fully set farth, in order to cut off, delete or disregard the first portion of the signal output from amplifier **19**. This cut off is employed to prevent extraneous, non-physical energy surges, such as RF and/or EMF fields, as hereinbefore described, from tripping the alarm.

Another significant feature of the present invention provides for removal from consideration of signals which do

not disappear and later reappear. The signals which do not disappear and later reappear are disregarded by this device to prevent continuous alarm outputs which are a nuisance. This is particularly helpful where the alarm system is operating in an area having exposure to phenomenon of prolonged duration such as a freight train passing nearby the alarm system. As the train passes, it generates a vibration which likely has an intensity sufficient to generate an alarm. In practice, this type of disturbance is not well received by alarm systems because the alarm system will generate an alarm which ceases after a predetermined time and which is regenerated again and again as long as the disturbance continues about the area. This provides for much frustration to the owner of the alarm system and the people nearby, thereby reducing its effectiveness. To overcome this problem, the alarm of the present invention monitors the signal causing the alarm. In the event this signal/disturbance continues to be present at a generally constant intensity for a time greater then the duration of the alarm response, the second and subsequent alarm responses are not generated until such time as the signal generated by the disturbance disappears and then reappears again. In practice this provides for one cycle of alarm response if the alarm system detects a disturbance such as a moving train. The alarm response will not be repeated over and over again until such time as the disturbance caused by the train disappears and then later reappears.

Switch **101** is nominally in a closed position and is held closed by the power supply voltage less voltage drop through resistor **119**. Shutting off or opening of switch **101** is accomplished by use of an inverting comparator **111** and its associated circuitry. Resistors **105** and **107** establish a reference voltage for comparator **111**. Resistor **103** and capacitor **109** filter out high frequency transients on the input to comparator **111**. In the event a continuous high frequency signal is present at the input of sensor means **12** or at the output of amplifier **19**, the high frequency filter **103** and **109** could lead to a continuous, low DC signal output at the output of comparator **111**. This inhibits clocking of D flip-flop **125** which in turn opens switches **127** and **129** until the output of comparator **111** changes state and produces a clock signal at the clock input of D flip-flop **125**.

As a signal inputted to comparator **111** goes high, the output of comparator **111** goes low and is coupled through a diode **113** and a capacitor **115** to switch **101**. Therefore the source voltage for keeping switch **101** in its closed position is shorted for a predetermined duration of time through capacitor **115**, which provides for opening of switch **101** for that duration of time. By adjusting the capacitance of capacitor **115**, a delay, such as 5 milliseconds is required to charge capacitor **115** in order to turn bilateral switch **101** back on. Resistor **117** is provided as the discharge resistor for capacitor **115** and its value is chosen so that capacitor **115** will not discharge for several hundred milliseconds so as not to interrupt the signal pulse string. The discharge time of capacitor **115** is such that only the first few milliseconds of any pulse string is allowed to be coupled through capacitor **115** and diode **113** to shut off analog bilateral switch **101**.

The next step, after passing the amplified signal through switch **101** is to input this amplified signal simultaneously to two separate and independent voltage integrators, **29** and **31**, shown within dotted line perimeters, that are connected in parallel to the output of amplifier **19**. Integrator **29** comprises a resistor **33** and a capacitor **35** while integrator **31** comprises a resistor **37** and a capacitor **39**. The ratio of sensitivity of integrators **29** and **31** is adjusted, by varying the resistance of resistors **33** and **37** and varying the capacitance of capacitors **35** and **39** to the order of approximately 5:1 so that integrator **29** is approximately five times as sensitive as integrator **31**. This ratio can be varied outside of 5:1 under certain circumstances such as where the vehicle is unusually large.

The next step is to send the output of integrators **29** and **31** to a pair of separate voltage comparators/pulse generators **41** and **43** that are equally referenced from input terminal **1**. The reference for voltage comparator **41** is established by resistors **45** and **47** and a diode **49** while the reference for voltage comparator **43** is established by resistors **51** and **53** and a diode **55**. Another pair of diodes **57** and **59** are used to latch the respective voltage comparators **41** and **43** when their respective input signals exceed the comparator reference voltages.

The next step in this novel method is for the pulse generator portion of comparators/generators **41** and **43** to output either a first pulse from generator **41** representing a low intensity signal or separate first and second pulses from both generators **41** and **43** representing a signal containing a low intensity and a high intensity component. This is performed when voltage comparator **41** or **43** is latched through either diode **57** or diode **59** when the incoming signal from integrators **29** or **31** exceeds the reference voltage thereto. Once latched, the respective comparator produces an output pulse timed by resistor **45** and capacitor **61** with respect to comparator/pulse generator **41** or by resistor **51** and a capacitor **63** with respect to comparator/pulse generator **43** to one of two drive transistors **65** and **71**.

Output drive transistor **65** receives the output pulse from voltage comparator/pulse generator **41** through a resistor **67** and an indicating light emitting diode **69** for the duration of the pulse from generator **41**. The other output drive transistor **71** receives the output pulse from voltage comparator/pulse generator **43** through a resistor **73** and an indicating light emitting diode **75** for the duration of the pulse from generator **43**. Resistors **77** and **79** are current limiting resistors employed to protect transistors **65** and **71** respectively. The outputs are enabled by a ground placed on terminal **81** through a diode **83**. The outputs are fed respectively to terminal **85** to connect to a warn-away alarm circuit (not shown), and to terminal **87**, to connect to the full alert alarm circuit (not shown). The output pulse for the warn-away alarm, from terminal **85**, may be set at one length, such as 200 milliseconds, and the output pulse for the full alarm from terminal **87** may be set at a different length, such as approximately 1 full second.

The negative voltage, 5 millisecond pulse from comparator **111** is inverted by inverter **123**. This provides a logic one pulse which resets and holds in reset for the 5 millisecond period (determined by capacitor **115**) the "D flip-flop" **125**. This achieves the function of discarding from consideration a continuous signal having a frequency such that this signal represents a DC signal at input of comparator **111**. Thus, this signal will eliminate any clock activity to D flip-flop **125** until such signal disappears and again reappears. The "Q" output of **125** is connected to the inputs of "AND GATES" **151** and **165**, causes the outputs of **151** and **165** to go low. The low signals at the outputs of **151** and **165** opens normally closed analog bilateral switches **127** and **129**. This prevents any output from pulse generators **41** and **43** being coupled to output transistors **65** and **71**.

After the end of the 5 millisecond reset pulse, the "Q" output at flip-flop **125** is set high by a clock signal created by comparator **111**. This clock pulse is inverted by inverter **121** to present the proper input to the **125** clock input. The

sensor outputs 85 and 87 are now enabled for the duration of the output pulse(s) created by pulse generators 41 and 43.

As mentioned before, this invention provides for the embodiment where the alarm will not be continuously triggered by a relatively constant threat signal which persists without interruption. One application for this feature is an armed alarm system which is triggered by a train. Ordinary alarm systems continue to sound its warning for the duration of the threat signal. The alarm system of the present invention provides for a single cycle of alarm and does not sound the alarm again until the threat signal disappears and again reappears. Therefore in the example of the passing train, the alarm would sound for one cycle, such as 2.5 seconds for the warn-away and 30 seconds or a minute for a full alarm, and as long as the train threat does not disappear (i.e. the train passed) and again reappear (i.e. another train appears) the system of the present invention will not sound the alarm again. The following circuit provides this function.

Output bypass timers 143 and 157 are triggered and reset from the trailing edge (negative going edge) of the output pulses from 41 and 43 respectively. The output of full alarm pulse generator 43 is applied to timer 157 via AND gate 173. When any input of an AND gate goes low, its output goes low. All inputs of an AND gate must be high to get a high at its output. These triggers are coupled to the inputs of the 555/556 timers by coupling capacitors 141 and 155 respectively. Resistors 139 and 153 are pull-up resistors on the trigger input of their respective timers. Resistor 145 and capacitor 149 control the time that the "warn-away" output is disabled. Resistor 159 and capacitor 163 control the time that the "alarm" output is disabled. When the timers are triggered/reset, the timing capacitors 149 and 163 are discharged, the outputs go high, and the timing cycle is started. The outputs will go low at the end of the timing cycle.

The high output from warn-away bypass timer 143 is inverted by inverter 147 and applied to AND gate 151. The low at the input of 151 causes the output of 151 to go low opening bilateral switch 127. This interrupts any output from 41 and disables the warn-away output drive to output transistor 65. All warn-away outputs are therefore disabled anytime that warn-away bypass timer 143 is running. All repetitive triggers that occur inside the timing window are bypassed (disabled) on the warn-away output until the warn-away bypass timer expires (approximately ½ second). While the timer is running, if the output at 41 goes low (output pulse expires), the timing capacitor is discharged, and the timer is restarted with a full charging cycle duration to run.

Full alarm bypass timer 157, upon receiving a negative pulse from the trailing edge of the output pulse from 43 via AND gate 173, works identical to the warn-away bypass timer 143. The high output from 157 is inverted by inverter 161 and applied to AND gates 151 and 165. The low at the inputs of 151 and 165 causes the outputs of 151 and 165 to go low. This low output in turn is applied to the control input of bilateral switches 127 and 129. Both output drives are interrupted, disabling both outputs (warn-away and full alarm) for the duration of the full alarm output bypass timer 157 (several seconds).

The full alarm bypass timer 157 is also used as a power up reset timer. At power on capacitor 171 is fully discharged, applying a low at the input of AND gate 173. Capacitor 171 is slowly charged bias resistor 169 removing the low input from AND gate 173. The output of 173 is low during this charging period triggering full alarm bypass timer 157. Therefore, at power up, both outputs are disabled for several seconds until timer 157 times out.

FIG. 2 shows the flow of the induced signal and produced pulse through the circuit of FIG. 1. The sensor of sensor means 12 generates a signal the strength of which is proportional to the intensity or degree of the threat. Amplifier 19 provides full wave rectification and amplification of the signal for presentment through switch 101 to integrators 29 and 31 in parallel for integration of the total value of the pulse train less the first part thereof cut off by switch 101. The respective sensitivities of integrators 29 and 31 help to differentiate between a lower degree of threat which is likely non-threatening in nature and a higher degree of threat that represents a potential intrusion into the vehicle. The separate voltage comparators/output pulse generators 41 and 43 complete the differentiation and output a pulse to the output indicator and driver that results in one or both alarms being activated.

Amplifier 19, referenced by voltage from the car battery, amplifies all signals received from the sensor means 12. Integrators 29 and 31 ignore any signal whose peak-to-peak voltage is equal to or less than the amplifier reference voltage. Hence, very low signals generated by the sensor means 12 will not produce a signal or signals sufficient to activate voltage comparators/output pulse generators 41 and 43 to latch the respective unit and produce a pulse to be sent on to output drive transistors 65 and 71.

Upon receipt of a low degree threat signal, above the reference level of amplifier 19, the circuit will operate to activate voltage comparator 41, latch it, and produce a pulse that will activate the warn-away alarm trigger output (not shown) through terminal 85. While this is going on, the circuit remains fully prepared to receive and process other signals from the sensor means 12. In the event a high degree of threat is sensed by sensor means 12 while the warn-away alarm is given, the security breached alarm trigger output, will be tripped through terminal 87 and both alarm outputs will be tripped or triggered simultaneously. In all cases, both alarm trigger outputs are triggered when a high degree of threat is received, unless at the time of the time of threat input, warn-away output is disabled by the bypass timer 143, while only the warn-away alarm trigger output is tripped in response to a low degree of threat.

This invention also carries the capability to drive the vehicle's electronic security system's audible or visual warning devices directly or indirectly by use of an external control relay. Since the warn-away output pulses are short (approximately 200 milliseconds) and could be enabled by the vehicle's electronic security system, this greatly reduces the annoyance created by an alarm system's full alarm. The output drivers have the capability to drive output control circuits as long as a ground is applied to output control terminal 81. These output pulses are fed through output terminals 85 and 87 to directly or indirectly drive warning devices.

FIG. 3 shows an alternate embodiment of the invention. Changing the timing of the full alarm pulse generator 43 to a range greater then the warn-away 200 milliseconds allows for a considerable reduction in the output circuitry. This also reduces the installation time of the present invention. With a 200 millisecond warn-away output pulse and one second full alarm pulse, these pulses can be outputted or multiplexed on the same wire for applying to one such input of the alarm control module. In the same example full alarm output pulse generator 43/timing capacitor 63 is changed to 5 times its normal value. The full alarm output pulse time is therefore increased by a factor of 5.

The outputs from output pulse generators 41 and 43 are then applied to the common output indicating LED 69 and output drive transistor 65. This is accomplished through output drive current limiting resistors 67 and 73 and analog bilateral switches 127 and 129 connecting to a common conductor before reaching LED 69. Therefore the LED will indicate warn-away output with a short 200 millisecond light output pulse and full alarm output with a longer one second light output pulse. The output transistor 65 will be conducting, applying a ground or near ground potential to the collector for 200 milliseconds for warn-away and for one second for full alarm.

FIG. 4 represents a modification to the preferred embodiment shown in FIG. 1 and shows the output of the 5 millisecond timer 131 inverting the signal, by inverter 123, and feeding the output signal to two normally open, bilateral switches 100 and 102. The signal closes switches 100 and 102 for the 5 millisecond period. This keeps integrator capacitors 35 and 39 shorted out for the 5 millisecond time period. This represents another method of handling the signal.

FIG. 5 represents a modification to the preferred embodiment shown in FIG. 3 and also shows the output of the 5 millisecond timer 131 to invert the signal, by inverter 123, and feeding the output signal to two normally open, bilateral switches 100 and 102. The signal closes switches 100 and 102 for the 5 millisecond period. This also keeps integrator capacitors 35 and 39 shorted out for the 5 millisecond time period. This represents another method of handling the signal.

FIG. 6 a schematic representation of an alternate embodiment of the of this invention. It is a schematic of a dual stage sensor that uses a custom CMOS integrated circuit (IC). FIGS. 7 through 15 are block diagrams and schematics of this custom CMOS integrated circuit. The schematic in FIG. 6 is the schematic of sensor means 12 being represented by a shock sensor 12. Although this embodiment is hereafter described employing a shock sensor, any sensor could integrate this device.

With the custom IC, there is substantial reduction in the number of parts required to build the product and subsequently the economic cost of the device. The part reduction is evident by the comparison of the part count in the discrete component embodiment of FIG. 5 and the device of the present embodiment shown in FIG. 6. The reduction in component count and their associated cost of assembly, allows for a significant reduction in the cost of the complete sensor unit.

A nominal plus 12.6 volts DC power source enters the sensor at terminal 1 and returns through terminal 11 (common). The current from this power source is limited by current limiting and filtering resistor 5. Capacitor 9 along with resistor 5 filters the transients in the power source. The voltage is then regulated down to 5 volts by resistor 6, zener diode 7, and transistor 8. Transistor 8, zener diode 7, and resistor 6 regulation method was chosen to reduce current in the sensor or to reduce the cost.

Sensor 12 supplies an alternating current (AC) voltage output indicative of the sensed input to the sensor (sound, vibration, shock, movement (field disturbance or ultrasonic sensor), motion, or other input). Sensitivity of the complete sensor is adjusted with potentiometer 23 by adjusting the proportionate input voltage going to IC 201. IC 201 is a CMOS device limiting the frequency input capability of the integrated circuit. This limits the frequency of the RF energy that can enter IC 201 through its input circuitry. Capacitor 24 filters low frequency RF energy that may be detected by any of IC 201 input circuitry; therefore, IC 201 eliminates the requirement for having the signal appear, disappear, and then reappear before the sensor will actuate the output. Therefore IC 201 does not include circuitry of the other embodiment which eliminates the DC signal resulting from RF energy feeding into the device.

Resistor 34 establishes a 10 KHz nominal operating frequency of the clock of IC 201. Although IC 201 operates at 5 volts and the maximum operating voltage is 7 volts, the output is protected to 17 volts by stacking the output transistors (not shown) allowing IC 201 to operate in a 12 volt system. Terminal 87 provides a connection for a negative output while triggered on the full alarm output and capacitor 78 provides protection to IC 201 from high voltage transients such as static electricity. LED 69 provides a visual signal of device triggering. In the preferred embodiment it is energized for two seconds. LED 69 will flash at a 5 Hertz rate during a warnaway trigger and is constantly on during the full alarm trigger. The full alarm output signal is negative and the warnaway output is positive. This provides for warnaway output to drive output transistor 65 (required for driving a relay) through base current limiting resistor 67. Transistor 65 then supplies a negative pulse during the warnaway output to output terminal 85. In the preferred embodiment the output pulse is approximately 200 milliseconds for warnaway output and approximately 1.2 seconds for a full alarm output. IC 201 provides both positive and negative voltage outputs to the output terminals as they are required for the application. Another version of this sensor 12 uses two negative outputs from IC 201 to drive alarm inputs directly. The positive output is used to drive a transistor, so that the alarm system can chirp a siren using a relay, with the 200 millisecond warnaway output.

FIG. 7 is a top level block diagram of IC 201 showing its major blocks, digital block 401, analog block 301 and its connection pads. The IC of the preferred embodiment employs eight pins. The logical configuration of this IC has 11 outputs however. Therefore only eight of the eleven pins are brought out in any one configuration. AVSS, the analog ground, is always terminated to VSS. IC 201 ground terminal and its output is not brought out. As stated above, both the full alarm output and the warnaway output have positive and negative pads (pad is an output terminal on the IC chip internal to IC 201), that can be terminated according the requirements of the application. Only one of the full alarm and one of the warnaway alarm outputs are brought out of IC 201.

FIG. 8 is an intermediate level block diagram of analog block 301 showing the major blocks of the analog section of the IC 201, amplifier block 303 and integrator block 305. The basic inputs are shown on the left side and the outputs are shown on the right side of the block diagram. PH1 through PH2B outputs, from the clock of IC 201, drive all the functions of IC 201. VBIAS is a bias for the CMOS analog circuitry of IC 201. PORB is a power on reset (bar or not). VIN is the input signal to amplifier block 303. AVSS is the analog ground reference of IC 201. DISINTEG is a disable the integrator signal from the digital block that uses the amplifier output (AMPOUT) as a clock to initiate the DISINTEG signal. WARNTR is the warnaway trigger output of the warnaway integrator that is used to trigger the timed warnaway output of IC 201. ALARMTR is the full alarm trigger output of the full alarm integrator that is used to trigger the timed full alarm output of IC 201.

FIG. 9 is a schematic/block diagram of amplifier block 303 showing amplifier 307 block, inverting/noninverting

determination circuitry and voltage reference circuitry. The inverting/noninverting circuitry provides outputs to effectively rectify the input signal before it is input to the amplifiers. Amplifier **307** block is described in FIG. **10**. VREF is established by a voltage divider made up by 190K ohm resistor **315**, 5K ohm resistor **317**, and 5K ohm resistor **319**. VREF is stabilized by 5 picofarad capacitor **313** and micropower amplifier **321** connected as voltage follower. VREF is at 125 millivolts ((5/200)*5=0.125). The sensor signal is connected to the input of amplifier **309** which uses VREF as a reference voltage. Amplifier **309** is an inverting switching capacitor amplifier with a gain of **40** that uses clock signals PH1 through PH2B to control the switching of the amplifier signals. A similar amplifier is described below during the disclosure of FIG. **10**. The output of amplifier **309** is then input to comparator **311**, which is referenced to VREF the same as amplifier **309**. Therefore any movement of the IC input signal (sensor output signal) away from its zero reference will cause the output of comparator **311** to go to full output polarity of the signal. This is then input to the "D" input of "D-flip-flop" **323**. One of the clock signals, PH1B, is used to clock this to output "Q" on the next clock cycle. PORB control signal resets "D-flip-flop" **323** to a low output at power up. A logic high "Q" output is used as a INV control signal and a logic low signal is inverted by inverter **325** and used as the NONINV control signal.

FIG. **10** is a schematic of amplifier **307** block. It is a pair of switching capacitor amplifiers with a total gain of 1600. During phase 1 of the clock (PH1 and PH1B), analog bilateral switch **335** is open and analog bilateral switches **337**, **341**, and **349** are closed effectively shorting out both amplifiers **345** and **353**, and coupling the signal to the input of the amplifier input capacitor **339** through analog bilateral switch **331**, if the signal is not inverted (AVSS (ground) is connected), or analog bilateral switch **333** if the signal is inverted (VIN (input signal) is connected). This places ground at the input and output terminals of both amplifiers **345** and **353**, if the input is not inverted, or the level of the signal if the input is inverted. The input signal is very small in amplitude, therefore there is not a significant difference at the output of the second amplifier **353** with either ground or the signal connected.

During phase 2 of the clock (PH2 and PH2B), analog bilateral switch **335** is closed and analog bilateral switches **337**, **341**, and **349** are open. This connects VIN (input signal) to the input of the amplifiers if the signal is not inverted or connects AVSS (ground) if the signal is inverted. This impresses a positive voltage equal to the input signal across input capacitor **339** (20 picofarads) in either case. If the signal is negative it is inverted by first applying the input signal to amplifiers **345** and **353** while they are shorted and then applying ground to input when they are in the amplifying mode (phase 2). This rectifies the signal by always placing a positive signal, with reference to the applied reference that is applied during the none amplifying mode, to the input of amplifier **345** during the amplifying phase (phase 2 of the clock).

Amplifier **345** has a gain of 40 because it will require **40** times the voltage across 0.5 picofarad capacitor **343** to equalize the input voltage across 20 picofarad capacitor **339**. The same is true of amplifier **353** and 20 picofarad capacitor **347** and 0.5 picofarad capacitor **351**. Amplifiers **345** and **353** are buffered CMOS micropower amplifiers which are known in the art. Capacitor **354** is a 5 picofarad filter capacitor on the 125 millivolt reference input to amplifiers **345** and **353**.

FIG. **11** is a schematic of the warnaway and alarm switching capacitor integrators and their associated circuitry. If the amplifier output signal (AMPOUT) has a fast enough rise time and is of sufficient amplitude to trigger the disable integrator control circuitry (clock a "D-flip-flop"), it will generate a 5 millisecond integrator disable control signal (DISINTEG). This signal will turn on analog bilateral switches **371** and **377**, shorting to ground both the warnaway and full alarm integrator capacitors for 5 milliseconds. This will eliminate the first five milliseconds of any high amplitude fast rise time signal, such as one that would be created by the inrush current in a wire going to an incandescent lamp if the wire is near the inductor of an electromagnetic shock sensor. After five milliseconds, the input is allowed to go to the integrator for integration.

During phase 1 (PH1/PH1B) of the clock input capacitor **363** (0.5 picofarad) of the warnaway integrator is shorted to AVSS (ground) on both ends by analog bilateral switches **355** and **367**. Also during phase 1 (PH1/PH1B) of the clock input capacitor **365** (0.5 picofarad) of the full alarm integrator is shorted to AVSS (ground) on both ends by analog bilateral switches **359** and **373**. During phase 2 (PH2/PH2B) of the clock, integrator input capacitor **363** is connected to the AMPOUT input signal on one end by analog bilateral switch **357** and to warnaway integrator **381** and its associated integration timing control capacitor **379** (10 picofarads) on the other end by analog bilateral switch **369**. Additionally, during phase 2 (PH2/PH2B) of the clock, integrator input capacitor **365** is connected to the AMPOUT input signal on one end by analog bilateral switch **361** and to full alarm integrator **385** and its associated integration timing control capacitor **383** on the other end by analog bilateral switch **375**. Warnaway integrator **381** would require 20 dumps (20 full clock cycles (2 milliseconds)) of input capacitor **363** into integrator capacitor **379** to equal the average level of the average input signal level. Full alarm integrator **385** would require 200 dumps (200 full clock cycles (20 milliseconds)) of input capacitor **365** (0.5 picofarads) into integrator capacitor **383** (100 picofarads) to equal the average level of the average input signal level. Voltage divider **387** is composed of two equal size CMOS transistors in series, therefore the output of the divider is equal to one half of the VDD voltage of the IC. If VDD is 5 volts, then the reference for comparators **389** and **391** is 2.5 volts. Therefore with an average amplifier output signal level of 2.5 volts into the integrators, it would take 2 milliseconds for warnaway comparator **389** to generate a warnaway trigger output and 20 milliseconds for full alarm comparator **391** to generate a full alarm trigger output. This is in addition to the 5 milliseconds of integrator hold off, if the rise time of the input signal is fast enough and high enough to trigger the disable integrator control signal.

FIG. **12** is an intermediate level block diagram of digital block **401** showing the major blocks of the digital section of the IC, output timer block **403**, disable integrator block **405**, clock pulse phase circuitry **407**, test select **409**, RC oscillator **411**, power on reset and bias generator **413**, and voltage divider **387** disclosed above in the FIG. 11 (integrators). The power on reset and bias generator **413** is a group of transistors and one capacitor that generates a reset at power up and establishes a bias for all the analog amplifiers etc. Resistor capacitor (RC) oscillator **411** has all components on board including a 15 picofarad capacitor, with the exception of the timing resistor, which is external to IC **201**. It is a conventional CMOS RC oscillator with a divide by two circuit ("T-flip-flop") to produce a 10 Khz clock form a 20 Khz oscillator. Clock pulse phase circuitry **407** has pulse separation delay circuitry and inverters for both phases of the clock. Test select circuitry **409** selects internal circuits

for testing and accelerates the clock for the timers to reduce testing time of the IC. Test is initiated by pulling the input terminal up to VDD and the readings are taken on the adjust terminal.

FIG. 13 is a schematic of output timer block 403. It contains six timer blocks, timer clock divider block 421, and the associated circuitry required to support the output timing of IC 201. The six timers include five divider stages with resets and output determination circuitry. Timer clock divider block 421 has eleven divider stages with resets and a test mode bypass for the first 5 stages to accelerate testing. One of the eleven outputs is used as required for the input clocks to the 6 timers above.

Inverter 423 inverts the negative power on reset (PORB), which is inverted again by inverter 427 before being input to set "D-flip-flop" 431 "Q" output on (high). This starts 1.5 second full alarm disable timer 425 at power up via inverter 433 which inverts the signal to a low, which allows the output of "nor gate" 435 to go high, thereby removing the reset from the timer allowing it to start. When disable timer 425 starts, its done output remains low, which is inverted by inverter 429, thereby continuing to hold the reset off "D-flip-flop" 431, allowing the "Q" output to remain high for the timing cycle of disable timer 425. One and a half second disable timer 425 has a count of 29 with an input clock of 19.53 Hertz, which gives a time of 1.485 seconds, which is very close to the chosen nominal time of 1.5 seconds (1% off). The high "Q" output from "D-flip-flop" 431 is inverted by inverter 433 and used to disable any input from either the warnaway or full alarm integrators. This is done for the full alarm input, by setting the "D" input to "D-flip-flop" 439 low, with the output from inverter 433. This on the next 10 KHz clock cycle sets "D-flip-flop" 439 "Q" output low and holds "D-flip-flop" 437 in reset, thereby not allowing the full alarm input to be clocked through to its output timer 457 for the duration of disable timer 425 timing cycle. For the warnaway input, by setting one of the inputs to AND gate 447 low, forcing AND gate 447 output low disabling "D-flip-flop" 443 by holding it in reset and not allowing the warnaway input to be clocked through to its output timer 473 for the duration of disable timer 425 timing cycle. Full alarm disable timer 425 blocks both warnaway and full alarm inputs.

The positive inverted power on reset (PORB) is also used to reset all other timers. After reset, the alarm trigger input from the full alarm integrator (it triggers at power up) starts two second timer 465 of LED 69, but is blocked from starting full alarm output timer 457 by disable timer 425 holding "D-flip-flop" 437 in reset. Also after reset, the warnaway trigger input from the warnaway integrator (it triggers at power up also) triggers two second warnaway flash timer 483, but is also blocked from triggering warnaway output timer 473 by disable timer 425 holding "D-flip-flop" 443 in reset.

After the 1.5 second period at power on reset, an input from either the full alarm or warnaway integrators will trigger its associated output timers and input disable timer (s). An input from the full alarm integrator will trigger: disable timer 425, full alarm output timer 465 for LED 69, and full alarm output timer 457.

When the trigger is released, alarm disable timer 425 will run its full duration as described above. Full alarm output timer 465 for LED 69 is triggered by setting "RS latch" made up with "nor gates" 469 and 471, then through inverter 467 to release the reset on timer 465 allowing it to start. This will drive LED 69 output continuously for the full duration of the timing cycle through "nor gate" 469 and "or gate" 481 for the duration of timer 465. When timer 465 expires, it resets "RS latch" made up with "nor gates" 469 and 471, which holds the timer in reset and LED 69 off until the input is triggered again. Full alarm output timer 457 is triggered through clocking "D-flip-flop" 437 which transfers the high "D" input to the "Q" output. This sets "RS" latch made up with "nor gates" 461 and 463. The low output from "nor gate" 463 goes to inverter 459 to release the reset on timer 457 allowing it to start. When it starts, it drives the full alarm output through "nor gate" 461 for the full duration of the timing cycle. At the end of the timing cycle, the output of the timer resets "RS latch" made up with "nor gates" 461 and 463, which holds timer 457 in reset and full alarm output off until the full alarm output timer 457 is again triggered by an input from the full alarm integrator.

The warnaway trigger input from the warnaway integrator (shown in FIG. 11) will trigger the following timers of output timer block 403: warnaway disable timer 441 (700 milliseconds in the preferred embodiment), warnaway flash timer 483 for LED 69 (two seconds in the preferred embodiment), and warnaway output timer 473 (200 milliseconds in the preferred embodiment). Warnaway flash timer for LED 69 is started any time the warnaway trigger input is received. The input signal sets "RS latch" made up of "nor gates" 487 and 489. The low output from "nor gate" 489 is inverted by inverter 485. The high signal at the reset input of timer 483 releases the reset and allows timer 483 to start. The low output of timer 483 allows the output of "nor gate" 487 to go high for the duration of the timing cycle. This output is AND-ed with a 5 Hertz clock signal from clock timer 421 by AND gate 491, which will give a 5 Hertz output pulse string for a period of 2 seconds. The 5 Hertz signal is input into "or gate" 481 to drive LED 69 output with the 5 Hertz pulse string for the 2 second period. Hence, LED 69 flashes at a 5 Hertz rate for 2 seconds. A constant 2 second on (high) signal from full alarm output timer 465 of LED 69 will keep LED 69 on constant if it is input to "or gate" 481 at the same time as the 2 second 5 Hertz pulse string is input.

Warnaway output timer 473 is started by the warnaway input from the warnaway integrator clocking the high "D" input to the output. The high "Q" output sets "RS latch" made up of "nor gates" 477 and 479. Then the low output of "nor gate" 479 is inverted by inverter 475, applying a high to the reset input of timer 473. This releases the reset, which allows the timer to start. When warnaway output timer 473 starts, the output goes low, applying a low to one of the inputs of "nor gate" 477. This allows the output to go high, which provides a positive signal to drive the warnaway output, which can either be inverted or not inverted at the output terminal.

The warnaway trigger input clocks the high "D" input of "D-flip-flop" 449 to the "Q" output, the high "Q" output is inverted by inverter 451, providing a low to one of the inputs of "nor gate" 453. This is blocked from releasing the reset on timer 441 by the high warnaway trigger input being high, until the trigger input goes away, at which time warnaway disable timer 441 is started. When timer 441 starts, its output remains low for the duration of the timing cycle. This low output is inverted to a high to continue to hold the reset off on reset input of "D-flip-flop" 449 (it is a negative input for reset). The low output of inverter 451 also goes to the "D" input of "D-flip-flop" 455 which is toggled (transferred) to the "Q" output on the next 10 KHz clock cycle. The low "Q" output of "D-flip-flop" 455 goes to one of the inputs of AND gate 447 forcing its output to go low thereby placing a reset

on "D-flip-flop" 443. This blocks any warnaway trigger input to warnaway output timer 473, but does not block a full alarm input, for the duration of the warnaway disable timer 441. When timer 441 times out, its output goes high, producing a low at the output of "nor gate" 445. This resets "D-flip-flop" 449, causing its "Q" output to go low. The low at the "Q" output is inverted by inverter 451, releasing the warnaway trigger input by removing the reset from "D-flip-flop" 443 on the next 10 KHz clock cycle via "D-flip-flop" 455 and AND gate 447. This high at the output of inverter 451 is input to "nor gate" 453 forcing its output to go low. This places a reset on warnaway disable timer 441, forcing its output low. The low at the output of timer 441 is input to "nor gate" 445 allowing its output to go high. This releases the reset on "D-flip-flop" 449, making it available for another warnaway input trigger.

If a warnaway or full alarm input trigger is received while their respective disable timers are running, then that timer is reset by the positive input of the trigger via their respective "nor gates" 435 or 453 (inverts the signal and resets the timer). When the input trigger is removed, the reset is removed allowing the respective timer to start a new timing cycle. Therefore, as long as an activating input is present at the input of IC 201, the respective timer will be held in reset and if the signal goes away and returns within the respective disable timer timing cycle, it will be blocked from generating an output and it will reset and restart the respective disable timer when the signal disappears again.

FIG. 14 is a schematic of the integrator disable control circuit. If during an input, the input rises fast enough and has sufficient amplitude, the AMPOUT (amplifier output) signal will clock the high at "D-flip-flop" 501 "D" input to its "Q" output. This will release the reset on five millisecond integrator disable timer 503, allowing it to start. At the same time the high "Q" output is used to disable both warnaway and full alarm integrators 305 (discussed above). When integrator disable timer completes it cycle, its output goes high setting "RS latch" made up of "nor gates" 505 and 507. When the "RS latch" is set, a high out of "nor gate" 507 goes to "nor gate" 513, forcing its output to go low, resetting integration minimum time timer 515. One half of a 5 KHz clock cycle later (the Clock is inverted by inverter 509), a high input to "nor gate" 507 resets the "RS latch" and forces "nor gate" 507 output low, allowing the output of "nor gate" 513 to go high thereby releasing timer 515 to start its timing cycle. When integration minimum time timer 515 is reset or is in its timing cycle, its output is low, placing a reset on "D-flip-flop" 501 and disabling any additional integrator disable output for the duration of the reset and the timer's timing cycle, which is 400 milliseconds. PORB (power on reset bar or not) is inverted by inverter 511. The high reset signal out of inverter 511 then resets the "RS" latch and integration minimum time timer 515, starting a 400 millisecond timing cycle at power on reset.

FIG. 15 is a schematic of one of the 5 stage "T-flip-flop" timers that is used in IC 201. Any number of clock cycles can be used in these timers up to 31 (2^5-1), which is the number that is used in the FIG. 15 schematic. Unless the timing hits right on for a low count, it is preferable to use a higher count for better accuracy in the timing which provides for higher resolution. The 5 stage timers can use any output from clock divider timer 421. Warnaway output timer 473 with its 5 stage timing using a 5 KHz clock from divider timer 421 would have a time-out or a complete cycle of 6.2 milliseconds, while using a 5 Hertz output would have a time-out of 6.35 seconds.

Warnaway output timer 473, using a 156.25 Hertz clock input at the "T" input would have a 198.4 milliseconds time-out (within 1% of the nominal 200 milliseconds chosen). When the RB (reset bar) input is low, the timer is held off with all of the QB's ("Q" bars) high. When the reset is released and a clock signal is input at the "T" input to "or gate" 525, the output of "or gate" 525 will follow the clock until "done" goes high forcing "or gate" 525 to remain high as long as "done" is high, thereby stopping and holding the count at 31 until the timer is reset and released from reset. Each "T-flip-flop" stage divides the clock by 2. After "T-flip-flop" 527, the clock frequency would be 78.125 Hertz. After "T-flip-flop" 529, the clock frequency would be 39.0625 Hertz. After "T-flip-flop" 531, the clock frequency would be 19.53125 Hertz. After "T-flip-flop" 533, the clock frequency would be 9.765625 Hertz. After the last stage "T-flip-flop" 535 the clock frequency would be 4.8828125 Hertz if the counter would continue to run, but when all of the "QB" outputs go low, all the inputs to "nor gate" 537 are low, thereby allowing the "done" output to go high which blocks the clock input and stops counter/timer with a count of 31. It will remain stopped until the timer is reset and the reset is released.

Also this unit is described as a 2-stage sensor, but the invention is not limited to 2 stages and may be employed with three (3) or more stages (where a stage is level of threat input generating a predetermined alarm response). The output pulses may vary in lengths such as 200 milliseconds for the "warn-away" and approximately one full second for the full alarm output. This will allow alarms with the capability to distinguish between "warn-away" and full alarm with one input. This also provides for elimination of one drive transistor and one wire.

The above disclosure makes reference to component values and to time values. This is provided to aid the reader in reconstruction and understanding of the circuit. However, it is not limiting to the invention. A number of values may be employed to achieve the same or substantially the same result and to vary the parameters of the application.

While the invention has been described by reference to a particular embodiment thereof, those skilled in the art will be able to make various modifications to the described embodiment of the invention without departing from the true spirit and scope thereof. It is intended that all combinations of elements and steps which perform substantially the same function in substantially the same way to achieve the same results are within the scope of this invention.

What is claimed is:

1. A method of indicating a degree of incoming threat to an electronically secured area comprising the steps of:

a) sensing via a sensor means a degree of threat delivered to a secured area;

b) generating from the output of said means an electric signal proportional to said degree of threat;

c) analyzing said signal to determine if it represents a low degree of threat or a high degree of threat; and

d) producing either a first pulse representing said low degree of threat or separately producing said first pulse and a second pulse representing a signal having both said low degree of threat and said high degree of threat.

2. The method of claim 1 wherein said sensor means is chosen from a group consisting of shock sensors, motion sensors, field disturbance sensors, sound discriminator sensors, ultrasonic sensors and current sensors.

3. The method of claim 2 wherein the step of generating said electric signal includes the step of generating an alternating current signal whose amplitude is proportional to said degree of threat.

4. The method of claim 2 wherein the step of analyzing said signal includes the steps of:

a) amplifying said signal to produce an amplified signal;

b) impressing said amplified signal simultaneously to at least two separate integrators of different sensitivity to produce integrated signals; and

c) activating a pulse generator specific to each said integrated signal if the associated integrated signal reaches a predetermined level.

5. The method of claim 4 wherein the step of analyzing said signal further includes the steps of:

a) impressing said integrated signals simultaneously to respective comparators of different sensitivity to produce a first comparator signal if the associated integrated signal reaches a first predetermined level indicating said low degree of threat signal or a second comparator signal if the associated integrated signal reaches a second, higher predetermined level indicating said high degree of threat signal; and

b) activating a pulse generator specific to said first and said second comparator signals.

6. The method of claim 2 wherein the step of analyzing said signal includes the steps of:

a) amplifying said signal to produce an amplified signal;

b) impressing said amplified signal simultaneously to at least two separate integrators/comparators, each said integrator/comparator having different sensitivity; and

c) activating a pulse generator to produce said first and said second pulses specific to each signal integrated and compared if that signal reaches an associated predetermined level.

7. The method of claim 2 wherein said step of analyzing said signal includes the steps of:

a) amplifying said signal with an amplifier to produce an amplified signal;

b) impressing said amplified signal simultaneously to at least two separate integrators of different sensitivity to produce integrated amplified signals;

c) separately impressing said integrated, amplified signals to at least two signal comparators, one in series with each integrator and of different sensitivity, to provide a first comparator signal indicating said low degree of threat or a second comparator signal indicating said high degree of threat if the integrated, amplified signal reaches an associated predetermined level; and

d) activating a pulse generator specific to each said comparator signal.

8. The method of claim 2 including the additional step of ignoring said signal produced by said sensor means for a predetermined amount of time to eliminate spurious, nonphysical signals interacting with said sensor means.

9. The method of claim 8 wherein the step of ignoring said signal includes the step of opening a normally closed switch to disconnect said amplified signal, for said predetermined amount of time to eliminate spurious, nonphysical signals produced by random energy fields interacting with said sensor means.

10. The method of claim 8 wherein the step of ignoring said signal for said predetermined amount of time includes the step of opening a pair of normally closed switches for preventing second pulses from being output to an alarm controller to eliminate signals produced by continuous energy fields interacting with said sensor means.

11. The method of claim 8 wherein the step of ignoring said signal for said predetermined amount of time includes the step of resetting a flip-flop having an output therein and generating a logic low output for preventing the production of said first and said second pulses to eliminate signals produced by continuous energy fields interacting with said sensor means.

12. The method of claim 8 wherein said nonphysical signals include an EMF signal or an RF signal.

13. The method of claim 1 including the additional step of ignoring any signal that does not disappear and later reappear.

14. The method of claim 13 wherein said step of ignoring a signal that does not disappear and later reappear includes the steps of triggering a first or second timer to generate a third or a fourth pulse for opening a respective normally closed switch to prevent providing said first or second pulses to an alarm controller.

15. The method of claim 14 wherein said step of ignoring a signal that does not disappear and later reappear includes the steps of triggering said first or said second timer to generate said third or said fourth pulses for opening of respective normally closed switches to prevent providing said first or second pulses to said alarm controller for the duration of said threat delivered to said secured area.

16. The method of claim 1 further including the step of sending said pulses over a single conductor to an alarm controller.

17. The method of claim 16 wherein said alarm system controller recognizes said pulses by their associated pulse-width as either a full alarm threat or a warn-away threat.

18. An electronic security system for indicating a degree of threat incoming to an electronically secured area comprising:

a) sensor means for sensing a degree of threat delivered to a protected area;

b) means for generating an electric signal proportional to said degree of threat;

c) means for analyzing said electric signal to determine if it represents a low degree of threat or a high degree of threat; and

d) means for producing either a first pulse, representing said low degree of threat, or means for separately producing said first pulse and a second pulse, representing said signal having both said low degree of threat and said high degree of threat.

19. The device of claim 18 wherein said sensor means is chosen from a group consisting of shock sensors, motion sensors, field disturbance sensors, sound discriminator sensors, ultrasonic sensors and current sensors.

20. The device of claim 19 further including means for ignoring said signal produced by said sensor means for a predetermined amount of time to eliminate spurious, nonphysical signals.

21. The device of claim 20 wherein the means for ignoring said signal includes a normally closed switch which is opened for said predetermined amount of time for disconnecting said signal to thereby eliminate spurious, nonphysical signals produced by random energy fields interacting with said sensor means.

22. The device of claim 20 wherein means for ignoring said signal includes a pair of normally closed switches for preventing providing said first and said second pulses for said predetermined amount of time to an alarm controller to eliminate signals produced by continuous energy fields interacting with said sensor means.

23. The device of claim 20 wherein means for ignoring said signal includes a flip-flop having an output therein for generating a logic low output for preventing providing said

first and said second pulses for said predetermined amount of time to an alarm controller for eliminating signals produced by continuous energy fields interacting with said sensor means.

24. The device of claim 20 wherein said nonphysical signals include an EMF signal or an RF signal.

25. The device of claim 18 further including means for ignoring any signal that does not disappear and later reappear.

26. The device of claim 25 wherein said means for ignoring a signal that does not disappear and later reappear includes a first or second timer for generating a third or a fourth pulse for opening respective normally closed switches to prevent providing said first or second pulses to an alarm controller.

27. The device of claim 26 wherein said means for ignoring a signal that does not disappear and later reappear triggers said first or said second timer to generate said third or said fourth pulses for opening said normally closed switches to prevent providing said first or second pulses to said alarm controller for the duration of said threat delivered to said secured area.

28. The device of claim 18 further including a single conductor sending said first and second pulses to an alarm controller.

29. The device of claim 28 further including an alarm system controller for recognizing said pulses by their associated pulsewidth as either a full alarm threat or a warn-away threat.

30. The device of claim 18 further including a capacitor through which said signal is passed to remove any direct current and voltage therefrom.

31. The device of claim 18 wherein said means for analyzing said signal includes:

a) a signal amplifier, having an input and an output therein, for receiving said signal from said sensor means and producing an amplified signal thereof; and

b) a first and second voltage integrator connected to said amplifier output, said first integrator having a high sensitivity for responding to said low degree of threat signal and said second integrator having a lower sensitivity for responding to said high degree of threat signal, said integrators simultaneously receiving said amplified signal from said amplifier.

32. The device of claim 18 wherein said means for analyzing said signal includes:

a) a signal amplifier, having an input and an output therein, for receiving said signal from said sensor means and producing an amplified signal thereof; and

b) a pair of voltage comparators connected to said amplifier output, said first comparator having a high sensitivity for responding to said low degree of threat signal and said second comparator having a lower sensitivity for responding to said high degree of threat signal, said comparators simultaneously receiving said amplified signal from said amplifier.

33. The device of claim 18 wherein said means for analyzing said signal includes:

a) a signal amplifier, having an input and an output therein, for receiving said signal from said sensor means and producing an amplified signal thereof; and

b) a first and second voltage integrator and comparator connected to said amplifier output, said first integrator-comparator having a high sensitivity for responding to said low degree of threat signal and second said integrator-comparator having a lower sensitivity for responding to said high degree of threat signal said integrators and comparators simultaneously receiving said amplified signal from said amplifier.

34. The device of claim 18 wherein said means for producing either said first pulse or said separate first and second pulses includes a first and second voltage comparator/output-pulse-generator, each connected to a respective voltage integrator for comparing integrated voltages produced from each said integrator and producing said first pulse representing said low degree of threat signal from a high sensitivity integrator and separately producing both said first and said second pulse representing said low degree of threat signal from said high sensitivity integrator and said high degree of threat signal from a low sensitivity integrator.

35. The device of claim 34 further including a single conductor coupled to outputs of said pulse generators for transmission of said first and said second pulses having different pulsewidths.

36. The device of claim 18 further including a single conductor for transmission of said first and said second pulse therethrough.

37. The device of claim 18 wherein said first and said second pulses have a first and a second pulsewidth.

38. The device of claim 37 wherein said first pulsewidth is greater then said second pulsewidth or said second pulsewidth is greater then said first pulsewidth.

39. A method of blocking undesirable signals from activation of an alarm in an electronically secured area comprising the steps of:

a) sensing via a sensor means a degree of threat delivered to a protected area;

b) generating from the output of said sensor means an electric signal, having strength proportional to said degree of threat;

c) amplifying said signal to produce an amplified signal;

d) deleting the front end of said amplified signal and removing it from further consideration;

e) inputting said amplified signal to a comparator for comparing said amplified signal against a known reference;

f) producing in response to said comparison either a first pulse, representing a low degree of threat, or separately producing said first pulse and a second pulse, representing a signal having both said low degree of threat and a high degree of threat; and

g) simultaneously preventing the output of either said separate first and second pulses or said first pulse to an alarm until said amplified signal disappears and later reappears.

40. The method of claim 39 wherein said sensor means is chosen from a group consisting of shock sensors, motion sensors, field disturbance sensors, sound discriminator sensors, ultrasonic sensors and current sensors.

41. The method of claim 40 wherein the step of amplifying said signal includes the additional steps of amplifying and rectifying a full wave of said signal so that said amplified signal represents all values of said signal, is solely positive, and reduces the differential in the positive and negative aspects of said signal.

42. The method of claim 40 including the additional step of ignoring said signal produced by said sensor means for a predetermined amount of time to eliminate spurious, nonphysical signals interacting with said sensor means.

43. The method of claim 42 wherein the step of ignoring said signal includes the step of opening a normally closed switch to disconnect said amplified signal, for said prede-

termined amount of time, to eliminate spurious, nonphysical signals produced by random energy fields interacting with said sensor means.

44. The method of claim 42 wherein the step of ignoring said signal for said predetermined amount of time includes the step of opening a pair of normally closed switches to prevent said first and second pulses from being output to an alarm controller to eliminate signals produced by continuous energy fields interacting with said sensor means.

45. The method of claim 42 wherein the step of ignoring said signal for said predetermined amount of time includes the step of resetting a flip-flop having an output therein and generating a logic low output for preventing production of said first and said second pulses to eliminate signals produced by continuous energy fields interacting with said sensor means.

46. The method of claim 42 wherein said nonphysical signals include an EMF signal or an RF signal.

47. The method of claim 40 further including the step of ignoring any signal that does not disappear and later reappear.

48. The method of claim 47 wherein said step of ignoring a signal that does not disappear and later reappear includes triggering a first or second timer to generate a third or a fourth pulse for opening of an associated normally closed switch to thereby prevent said first or second pulses from being output to an alarm controller.

49. The method of claim 48 wherein said step of ignoring a signal that does not disappear and later reappear includes the steps of triggering said first or said second timer to generate said third or said fourth pulses for opening of said normally closed switches to thereby prevent said first or second pulses from being output to said alarm controller for the duration of said threat delivered to said secured area.

50. The method of claim 39 employing a single conductor for transmission of said first and said second pulse therethrough.

51. The method of claim 39 employing a single conductor coupled to outputs of a pair of pulse generators generating said first and second pulses for transmission of said first and said second pulses having different pulsewidths.

52. The method of claim 39 wherein said first and said second pulses have a first and a second pulsewidth.

53. The method of claim 52 wherein said first pulsewidth is greater then said second pulsewidth or said second pulsewidth is greater then said first pulsewidth.

54. A method of indicating a degree of an incoming threat to an electronically secured area comprising the steps of:

a) sensing via a sensor means a degree of threat delivered to an electronically secured area including the step of generating an alternating current signal whose amplitude is proportional to said degree of threat;

b) analyzing said signal to determine if it is of a low, degree of threat or of a high degree of threat, including the steps of:

i) rectifying and amplifying said signal;

ii) impressing the resulting rectified, amplified signal simultaneously to at least two separate integrators of different sensitivity;

iii) impressing the resulting separate integrated, amplified signals to at least two signal comparators of different sensitivity, one in series with each of said integrators; and

iv) activating at least one pulse generator responsive to an output of each said signal comparator; and

d) producing either a first pulse representing said low degree of threat or separately producing said first and a second pulse representing a signal having both said low degree and said high degree of threat.

55. The method of claim 54 wherein said sensor means is chosen from a group consisting of shock sensors, motion sensors, field disturbance sensors, sound discriminator sensors, ultrasonic sensors and current sensors.

56. The method of claim 54 including the additional step of ignoring said signal produced by said sensor means for a predetermined amount of time to eliminate spurious, nonphysical signals interacting with said sensor means.

57. The method of claim 56 wherein the step of ignoring said signal includes the step of opening a normally closed switch to disconnect said amplified signal, for said predetermined amount of time, from said integrators to eliminate spurious, nonphysical signals produced by random energy fields interacting with said sensor means.

58. The method of claim 56 wherein the step of ignoring said signal for said predetermined amount of time includes the step of opening a normally closed pair of switches to disconnect said pulse generators and prevent said first and second pulses from being output to an alarm controller to eliminate signals produced by continuous energy fields interacting with said sensor means.

59. The method of claim 56 wherein the step of ignoring said signal for said predetermined amount of time includes the step of resetting a flip-flop having an output therein and generating a logic low output for preventing said first and said second pulses from said pulse generators from being output to an alarm controller to eliminate signals produced by continuous energy fields interacting with said sensor means.

60. The method of claim 56 wherein said nonphysical signals include an EMF signal or an RF signal.

61. The method of claim 54 including the step of ignoring any signal that does not disappear and later reappear.

62. The method of claim 61 wherein said step of ignoring a signal that does not disappear and later reappear includes the steps of triggering a first or second timer to generate a third or a fourth pulse for opening of an associated normally closed switch to thereby prevent said first or second pulses from being output to an alarm controller.

63. The method of claim 62 wherein said step of ignoring a signal that does not disappear and later reappear includes the steps of triggering said first or said second timer to generate said third or said fourth pulses for opening of said normally closed switches to thereby prevent said first or second pulses from being output to said alarm controller for the duration of said threat delivered to said secured area.

64. The method of claim 63 further including the step of an alarm system controller recognizing said pulses by their associated pulsewidth as either a full alarm threat or a warn-away threat.

65. The method of claim 62 wherein the step of producing either said first pulse or said second pulse includes sending said pulses over a single conductor to an alarm controller.

66. Art electronic security system for indicating a degree of threat incoming to an electronically secured area comprising:

a) sensor means for sensing a degree of threat delivered to a secured area having the capability of outputting an electric signal having strength proportional to said degree of threat;

b) a capacitor through which said signal is passed to remove any direct current and voltage therefrom;

c) means for analyzing said signal to determine if it represents a low degree of threat or a high degree of threat including;

i) a signal amplifier for receiving said signal from said sensor means; and

ii) a pair of voltage integrators connected to an output of said amplifier, one said integrator having a high sensitivity for responding to a low intensity amplified signal and the other said integrator having a lower sensitivity for responding to a higher intensity amplified signal and for simultaneously receiving said amplified signal from said amplifier; and

d) means for producing either separate first and second pulses representing a signal containing both a low degree of threat and a high degree of threat, or said first pulse representing said low degree of threat including a pair of voltage comparators/output-pulse-generators, one connected to each said voltage integrator for comparing outputs produced from each said integrator and for producing a first pulse representing said low degree of threat from said high sensitivity integrator and for producing both said first and said separate second pulse from both said generators representing said low degree of threat from said high sensitivity integrator and said high degree of threat from said low sensitivity integrator.

67. The system of claim 66 wherein said sensor means is chosen from a group consisting of shock sensors, motion sensors, field disturbance sensors, sound discriminators, ultrasonic sensors and current sensor.

68. The system of claim 67 wherein said signal produced by said sensor means is ignored for a predetermined amount of time to eliminate spurious, nonphysical signals interacting with said sensor means.

69. The system of claim 68 wherein a normally closed switch is opened to disconnect said amplified signal, for said predetermined amount of time, from said integrators to eliminate spurious, nonphysical signals produced by random energy fields interacting with said sensor means.

70. The system of claim 68 wherein a normally closed pair of switches are opened to disconnect said first and said second pulse generators and to thereby prevent said first and second pulses from being output to an alarm controller to eliminate signals produced by continuous energy fields interacting with said sensor means.

71. The system of claim 68 wherein a flip-flop having an output therein is reset to generate a logic low output to disconnect said pulse generators and to eliminate signals produced by continuous energy fields interacting with said sensor means.

72. The system of claim 68 wherein said nonphysical signals include an EMF signal or an RF signal.

73. The system of claim 66 wherein any signal that does not disappear and later reappear is ignored.

74. The system of claim 73 wherein ignoring a signal that does not disappear and later reappear is accomplished by triggering a first or second timer to generate a third or a fourth pulse to open a normally closed associated switch to thereby prevent said first or second pulses from being output to an alarm controller.

75. The system of claim 74 wherein ignoring a signal that does not disappear and later reappear is accomplished by triggering said first or said second timer to generate said third or said fourth pulse to open said normally closed associated switch to thereby prevent said first or second pulse from being output to said alarm controller for the duration of said threat delivered to said secured area.

76. The system of claim 66 wherein said pulses are sent over a single conductor to an alarm controller.

77. The system of claim 66 wherein an alarm system controller recognizes said pulses by their associated pulse-width as either a full alarm threat or a warn-away threat.

78. A method of indicating a degree of incoming threat to an electronically secured area comprising the steps of:

a) sensing via a sensor means a degree of threat delivered to a secured area, said sensor means generating an electric signal proportional to said degree of threat;

b) analyzing said signal to determine if it represents a low degree of threat or a high degree of threat; and

c) producing either a first pulse representing said low degree of threat or separately producing said first pulse and a second pulse representing a signal having both said low degree of threat and said high degree of threat.

79. The method of claim 78 wherein said sensor means is chosen from a group consisting of shock sensors, motion sensors, field disturbance sensors, sound discriminator sensors, ultrasonic sensors and current sensors.

80. The method of claim 79 wherein said electric signal is an alternating current signal whose amplitude is proportional to said degree of threat.

81. The method of claim 79 wherein the step of analyzing said signal includes the steps of:

a) amplifying said signal to produce an amplified signal;

b) impressing said amplified signal simultaneously to at least two separate integrators to produce integrated signals; and

c) activating a pulse generator specific to each said integrated signal if the associated integrated signal reaches a predetermined level.

82. The method of claim 79 wherein the step of analyzing said signal further includes the steps of:

a) amplifying said signal to produce an amplified signal;

b) impressing said amplified signal simultaneously to at least two separate comparators of different sensitivity to produce a first comparator signal if the associated integrated signal reaches a first predetermined level indicating said low degree of threat signal or a second comparator signal if the associated integrated signal reaches a second, higher predetermined level indicating said high degree of threat signal; and

c) activating a pulse generator specific to said first and said second comparator signals.

83. The method of claim 79 wherein the step of analyzing said signal includes the steps of:

a) amplifying said signal to produce an amplified signal;

b) impressing said amplified signal simultaneously to at least two separate integrators/comparators, each said integrator/comparator having different sensitivity; and

c) activating a pulse generator specific to each said integrator/comparator to produce said first and/or said second pulse if the respective output signal reaches a predetermined level.

84. The method of claim 79 wherein said step of analyzing said signal includes the steps of:

a) amplifying said signal with an amplifier to produce an amplified signal;

b) impressing said amplified signal simultaneously to at least two separate integrators of different sensitivity to produce integrated amplified signals;

c) separately impressing said integrated, amplified signals to at least two signal comparators, one in series with each integrator and of different sensitivity, to provide a first comparator signal indicating said low degree of threat or a second comparator signal indicating said high degree of threat if the integrated, amplified signal reaches an associated predetermined level; and

d) activating a pulse generator specific to each said comparator signal.

85. The method of claim 79 including the additional step of ignoring said signal produced by said sensor means for a predetermined amount of time to eliminate spurious, non-physical signals interacting with said sensor means.

86. The method of claim 85 wherein the step of ignoring said signal includes the step of closing normally open first and second switches to prohibit processing of said signal for a predetermined amount of time to eliminate spurious, nonphysical signals produced by random energy fields interacting with said sensor means.

87. The method of claim 85 wherein the step of ignoring said signal for said predetermined amount of time includes the step of opening normally closed switches, thereby preventing said first and second pulses from being output to an alarm controller to eliminate signals produced by continuous energy fields interacting with said sensor means.

88. The method of claim 85 wherein the step of ignoring said signal for said predetermined amount of time includes the step of resetting a flip-flop having an output therein and generating a logic low output for preventing said first and said second pulses from being output to an alarm controller to eliminate signals produced by continuous energy fields interacting with said sensor means.

89. The method of claim 85 wherein said nonphysical signals include an EMF signal or an RF signal.

90. The method of claim 78 including the additional step of ignoring any signal that does not disappear and later reappear.

91. The method of claim 90 wherein said step of ignoring a signal that does not disappear and later reappear includes the steps of triggering a first or second timer to generate a third or a fourth pulse for opening of a normally closed switch to thereby prevent said first or second pulses from being output to an alarm controller.

92. The method of claim 91 wherein said step of ignoring a signal that does not disappear and later reappear includes the steps of triggering said first or said second timer to generate said third or fourth pulses for opening of said normally closed switches to thereby prevent said first or second pulses from being output to said alarm controller for the duration of said threat delivered to said secured area.

93. The method of claim 78 further including the step of sending said pulses over a single conductor to an alarm controller.

94. The method of claim 93 wherein an alarm system controller recognizes said pulses by their associated pulse-width as either a full alarm threat or a warn-away threat.

* * * * *

RE-ORDER from
BLUEBIRD
OFFICE SUPPLIES
TEL: (888) 477-0700
www.bluebirdonline.com

Limited Lifetime Consumer Warranty

Directed Electronics, Inc. ("DEI") promises to the original purchaser to repair or replace with a comparable reconditioned model any DEI unit (hereafter the "unit"), excluding without limitation the siren, the remote transmitters, the associated sensors and accessories, which proves to be defective in workmanship or material under reasonable use during the lifetime of the vehicle provided the following conditions are met: the unit was professionally installed and serviced by an authorized DEI dealer; the unit will be professionally reinstalled in the vehicle in which it was originally installed by an authorized DEI dealer; and the unit is returned to DEI, shipping prepaid with a legible copy of the bill of sale or other dated proof of purchase bearing the following information: consumer's name, telephone number and address; the authorized dealers name, telephone number and address; complete product description, including accessories; the year, make and model of the vehicle; vehicle license number and vehicle identification number. All components other than the unit, including without limitation the siren, the remote transmitters and the associated sensors and accessories, carry a one-year warranty from the date of purchase of the same. This warranty is non-transferable and is automatically void if: the original purchaser has not completed the warranty card and mailed it within ten (10) days of the date of purchase to the address listed on the card; the unit's date code or serial number is defaced, missing or altered; the unit has been modified or used in a manner contrary to its intended purpose; the unit has been damaged by accident, unreasonable use, neglect, improper service, installation or other causes not arising out of defects in materials or construction. The warranty does not cover damage to the unit caused by installation or removal of the unit. DEI, in its sole discretion, will determine what constitutes excessive damage and may refuse the return of any unit with excessive damage. TO THE MAXIMUM EXTENT ALLOWED BY LAW, ALL WARRANTIES, INCLUDING BUT NOT LIMITED TO EXPRESS WARRANTY, IMPLIED WARRANTY, WARRANTY OF MERCHANTABILITY, FITNESS FOR PARTICULAR PURPOSE AND WARRANTY OF NON-INFRINGEMENT OF INTELLECTUAL PROPERTY, ARE EXPRESSLY EXCLUDED; AND DEI NEITHER ASSUMES NOR AUTHORIZES ANY PERSON OR ENTITY TO ASSUME FOR IT ANY DUTY, OBLIGATION OR LIABILITY IN CONNECTION WITH ITS PRODUCTS. DEI DISCLAIMS AND HAS ABSOLUTELY NO LIABILITY FOR ANY AND ALL ACTS OF THIRD PARTIES INCLUDING ITS AUTHORIZED DEALERS OR INSTALLERS. DEI SECURITY SYSTEMS, INCLUDING THIS UNIT, ARE DETERRENTS AGAINST POSSIBLE THEFT. DEI IS NOT OFFERING A GUARANTEE OR INSURANCE AGAINST VANDALISM, DAMAGE OR THEFT OF THE AUTOMOBILE, ITS PARTS OR CONTENTS; AND HEREBY EXPRESSLY DISCLAIMS ANY LIABILITY WHATSOEVER, INCLUDING WITHOUT LIMITATION, LIABILITY FOR THEFT, DAMAGE AND/OR VAN-

© 1999 Directed Electronics, Inc.

DALISM. THIS WARRANTY DOES NOT COVER LABOR COSTS FOR MAINTENANCE, REMOVAL OR REINSTALLATION OF THE UNIT OR ANY CONSEQUENTIAL DAMAGES OF ANY KIND. IN THE EVENT OF A CLAIM OR A DISPUTE INVOLVING DEI OR ITS SUBSIDIARY, THE PROPER VENUE SHALL BE SAN DIEGO COUNTY IN THE STATE OF CALIFORNIA. CALIFORNIA STATE LAWS AND APPLICABLE FEDERAL LAWS SHALL APPLY AND GOVERN THE DISPUTE. THE MAXIMUM RECOVERY UNDER ANY CLAIM AGAINST DEI SHALL BE STRICTLY LIMITED TO THE AUTHORIZED DEI DEALER'S PURCHASE PRICE OF THE UNIT. DEI SHALL NOT BE RESPONSIBLE FOR ANY DAMAGES WHATSOEVER, INCLUDING BUT NOT LIMITED TO, ANY CONSEQUENTIAL DAMAGES, INCIDENTAL DAMAGES, DAMAGES FOR THE LOSS OF TIME, LOSS OF EARNINGS, COMMERCIAL LOSS, LOSS OF ECONOMIC OPPORTUNITY AND THE LIKE. NOTWITHSTANDING THE ABOVE, THE MANUFACTURER DOES OFFER A LIMITED WARRANTY TO REPLACE OR REPAIR THE CONTROL MODULE AS DESCRIBED ABOVE. *Some states do* not allow limitations on how long an implied warranty will last or the exclusion or *limitation of incidental or consequential damages. This warranty gives you specific* legal rights and you may also have other rights that vary from State to State.

This product may be covered by a Guaranteed Protection Plan ("GPP"). See your *authorized DEI dealer for details of the plan or call DEI Customer Service at 1-800-*876-0800. DEI security systems, including this unit, are deterrents against possible theft. DEI is not offering a guarantee or insurance against vandalism, damage or theft of the automobile, its parts or contents; and hereby expressly disclaims any liability whatsoever, including without limitation, liability for theft, damage and/or vandalism. DEI does not and has not authorized any person or entity to create for it any other obligation, promise, duty or obligation in connection with this security system.

Make sure you have all of the following information from your dealer:

A clear copy of the sales receipt, showing the following:

- *Date of purchase*
- Your full name and address
- Authorized dealer's company name and address
- Type of alarm installed
- Year, make, model and color of the automobile
- Automobile license number
- Vehicle identification number
- All security options installed on automobile
- Installation receipts

© 1999 Directed Electronics, Inc.

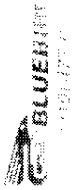

Directed Electronics, Inc.
2560 Progress Street, Vista, CA 92083-8422 • (619) 598-6200 • FAX (619) 598-6400

October 29, 1996

Owner/Operator
C-Tech Electronics
962 East 12th Street
Los Angeles, CA 90021

To Whom It May Concern:

Please be advised that your unauthorized selling, displaying, and/or advertising of Viper® products violates our registered trademarks(15 U.S.C.§ 1114) and federal unfair competition laws (15 U.S.C. § 1125(a)) as well as state consumer protection laws.

These violations give rise to such remedies as the forfeiture of your profits, triple damages, punitive damages and the reimbursement of our attorney's fees. *See e.g., Intel Corp. v. Terabyle Int'l. Inc.*, 6 F.3d 614 (9th Cir, 1993); *Polymer Tech. Corp v. Mimran*, 975 F.2d 58 (2d Cir. 1992); *Shell Oil Co. v. Commercial Petroleum, Inc.* 928 F.2d 104 (4th Cir. 1991); *Adolph Coors Co. v. A. Genderson & Sons, Inc.*, 486 F.Supp. 131 (D. Colo.1980).

Viper® is a proprietary product of Directed Electronics, Inc. (DEI) and is sold only through authorized dealers. Any other means of obtaining our products nullifies warranty and other consumer protection. If you continue to market or display our proprietary products without authorization or if you promote another product as a DEI product, we will not hesitate to pursue all our legal remedies, including court costs and damages.

Nevertheless, we will agree to forego legal action at this time if you (1) immediately cease and desist from marketing, selling or advertising DEI products, (2) agree in writing not to do so in the future, (3) return to DEI all items bearing DEI's Viper® marks and (4) identify your source of DEI products. Should you not agree to the foregoing, we will not hesitate to bring on appropriate legal action in Federal Court against you.

Sincerely,

Glenn Busse
Vice President,
Sales & Marketing

***Note: Please see enclosed examples of other lawsuits filed in these matters.

Please complete the following form and return it to DEI, Attn: Legal Department

The undersigned declares as follows:

1. I understand and agree that I am not authorized to sell, market, advertise and/or display any products of Directed Electronics, Inc. ("DEI").

2. I am the owner/operator of _____
_____.

3. I agree to immediately cease and desist from marketing, selling, advertising and/or displaying all DEI® products and will refrain from doing so at any time in the future.

3. I am returning all items bearing the Viper® mark, as well as any other products bearing the DEI® mark, to DEI immediately. This includes any fixtures, signs or advertising tools.

4. I obtained DEI® products from (state source) _____
_____
_____
_____

5. I understand that if I fail to comply with this request, DEI will seek legal action against me.

Executed on _____, 1998

I hereby declare that all statements made herein of my own knowledge are true and that all statements made on information and belief are believed to be true; and further, that these statements were made with the knowledge that willful false statements and the like so made are punishable by fine or imprisonment, or both, under Section 1001 of Title 18 of the United States Code.

By: _____ Its: _____
(Type or print name)

_____
(Signature)

REC'D IN
APR 0 3 1995
CLERK'S OFFICE

DISTRICT COURT, EL PASO COUNTY, COLORADO

Civil Action No. 93CV1080, Division 2

NOTICE OF RULING AND PERMANENT INJUNCTION

AUDIO PLUS, a Sole Proprietorship,

Plaintiffs,

v.

SUNSHINE RADIO, INC., d/b/a SUNSHINE AUDIO, and DIRECTED ELECTRONICS, INC.,

Defendants.

Directed Electronics, Inc. ("Directed") hereby gives actual notice of the Court's Order Regarding Motions for Summary Judgment (the "Order") and the permanent injunction contained therein. A copy of the Order is attached.

AMONG OTHER THINGS, THE COURT ENTERS A PERMANENT INJUNCTION AGAINST AUDIO PLUS AND ITS OFFICERS, AGENTS, AFFILIATES, EMPLOYEES, AND PERSONS ACTING IN ACTIVE CONCERT WITH AUDIO PLUS, FROM SELLING OR ADVERTISING DIRECTED'S AUTO SECURITY SYSTEMS (SUCH AS VIPER® CAR ALARMS), OR FROM USING DIRECTED'S TRADE MARK (VIPER®), WITHOUT SPECIFIC AUTHORIZATION FROM DIRECTED.

Dated this 3d day of April, 1994.

HOLME ROBERTS & OWEN LLC
Richard R. Young (#3278)
Dominic J. Ricotta (#19939)

Dominic J. Ricotta

Attorneys for Defendant
Directed Electronics, Inc.
90 S. Cascade Avenue, Suite 1300
Colorado Springs, CO 80903-1611
Telephone: (719) 473-3800
From Denver: (303) 623-2764

DAVID C. DOYLE, STATE BAR NO. 70690
IAN L. KESSLER, STATE BAR NO. 105899
DAVID M. BASSHAM, STATE BAR NO. 130904
BAKER & McKENZIE
Wells Fargo Plaza, Twelfth Floor
101 West Broadway
San Diego, CA 92101
Telephone: (619) 236-1441

Attorneys for DIRECTED ELECTRONICS, INC.

UNITED STATES DISTRICT COURT

CENTRAL DISTRICT OF CALIFORNIA

DIRECTED ELECTRONICS, INC., a California corporation,

Plaintiff,

v.

ACE DISTRIBUTING COMPANY, a California corporation; ANGELA M. ANDERSON, individually, and doing business as AUTO ALARM SPECIALIST; ATK INTERNATIONAL, INC., a California corporation, doing business as AUDIO GODS; DARRYL ANGELO WILSON, individually, and doing business as CAR COSMETICS; J & J BEEPERS, INC., a California corporation; ROBOCAR NETWORK, INC., a California corporation, doing business as ROBOCAR AUTO ACCESSORIES; SOHELA ANSARI KARIMIAN, also known as JERRY KARIMIAN, individually, and doing business as UNIC SOUNDS; WHOLESALE CONNECTION, INC., a California corporation; JOE GUADALUPE CAVALA, individually, and doing business as CAVALA'S AUTO STEREO; and DOES 1 through 50, inclusive.

Defendants.

CASE NO. 94 CV 1431

COMPLAINT OF DIRECTED ELECTRONICS, INC. FOR:

1) FEDERAL TRADEMARK INFRINGEMENT (15 U.S.C § 1114);

2) FEDERAL UNFAIR COMPETITION AND FALSE DESIGNATION OF ORIGIN (15 U.S.C. § 1125(a));

3) TORTIOUS INTERFERENCE WITH CONTRACT;

4) STATE UNFAIR COMPETITION (CAL. BUS. & PROF. CODE § 17200);

5) STATE TRADEMARK INFRINGEMENT (CAL. BUS. & PROF. CODE § 14335);

6) DILUTION AND INJURY TO BUSINESS REPUTATION (CAL. BUS. & PROF. CODE § 14330);

7) COMMON LAW UNFAIR COMPETITION;

8) MONEY OWED

JURY TRIAL DEMANDED

15053.1

DAVID A. DOYLE, STATE BAR NO. 70690
IAN L. KESSLER, STATE BAR NO. 105899
DAVID M. BASSHAM, STATE BAR NO. 130904
BAKER & McKENZIE
Wells Fargo Plaza, Twelfth Floor
101 West Broadway
San Diego, CA 92101
Telephone: (619) 236-1441

Attorneys for DIRECTED ELECTRONICS, INC.

FILED

JUL - 1 1994

CLERK, U.S. DISTRICT CO
SOUTHERN DISTRICT OF CAL
BY

UNITED STATES DISTRICT COURT

SOUTHERN DISTRICT OF CALIFORNIA

DIRECTED ELECTRONICS, INC., a California corporation, Plaintiff, v. MARK PAUL EDWARDS, individually, and doing business as AUDIO EXPRESS; JORGE M. RODRIGUEZ, individually, and doing business as CRUZIN CONNECTION; ROBERT PRESCOTT, individually, and doing business as ELECTRONICS CENTER, also known as AUTO SOUNDS ELECTRONICS CENTER; MARK PRESCOTT, individually, and doing business as ELECTRONICS CENTER, also known as AUTO SOUNDS ELECTRONICS CENTER; AMMAR SAID ALI, also known as AMMAR SAID, individually, and doing business as PRIME STEREO; BRK, INC., a California corporation, doing business as RONNIE'S ELECTRONICS; SONG IL KIM, individually, and doing business as A & A STEREO AND T.V. SERVICE CENTER; and DOES 1 through 50, inclusive, Defendants.	CASE NO. 941038 GT (RBB) COMPLAINT OF DIRECTED ELECTRONICS, INC. FOR: 1) FEDERAL TRADEMARK INFRINGEMENT (15 U.S.C. § 1114); 2) FEDERAL UNFAIR COMPETITION AND FALSE DESIGNATION OF ORIGIN (15 U.S.C. § 1125(a)); 3) TORTIOUS INTERFERENCE WITH CONTRACT; 4) STATE UNFAIR COMPETITION (CAL. BUS. & PROF. CODE § 17200); 5) STATE TRADEMARK INFRINGEMENT (CAL. BUS. & PROF. CODE § 14335); 6) DILUTION AND INJURY TO BUSINESS REPUTATION (CAL. BUS. & PROF. CODE § 14330); 7) COMMON LAW UNFAIR COMPETITION JURY TRIAL DEMANDED

New Jersey

UNITED STATES DISTRICT COURT

FOR THE DISTRICT OF NEW JERSEY

Paul J. Hirsh, Esq.
Beth R. Stearns, Esq.
WHIPPLE, ROSS & HIRSH, P.A.
9 Campus Drive
Parsippany, New Jersey 07054-4496
201-538-5500
PJH 5941
BRS 6028
Attorneys for Plaintiff DIRECTED ELECTRONICS, INC.

ORIGINAL FILED
JUL 1 1994
WILLIAM T. WALSH, CLERK

DIRECTED ELECTRONICS, INC., a California corporation,

Plaintiff,

v.

BRAVO ELECTRONICS, INC., a New York corporation, BIG CITY SOUNDS, INC., a New Jersey corporation, AUTO CHECK ALARMS, INC., a New Jersey corporation, and DOES 1 through 50, inclusive,

Defendants.

CIVIL ACTION NO. 94-3251 (AM

COMPLAINT AND JURY DEMAND

1) FEDERAL TRADEMARK INFRINGEMENT (15 U.S.C. § 1114);

2) FEDERAL UNFAIR COMPETITION AND FALSE DESIGNATION OF ORIGIN (15 U.S.C. § 1125(a));

3) TORTIOUS INTERFERENCE WITH PROSPECTIVE ECONOMIC ADVANTAGE;

4) STATE COMMON LAW UNFAIR COMPETITION;

5) STATE UNFAIR COMPETITION (N.J.S.A. 56:4-1, et seq.

POSTMARKED 7/12/94
CLIENT NO. 6706775I-930
AUG 15 1994
ENTIRE COPY DMB
CAPTION PG ILK IDCD
CALENDAR ONLY

Directed Electronics, Inc.
America's Largest Auto Security Company.

2560 Progress Street
Vista, CA 92083-8491
U.S.A.

Tel: (760) 598-6200
Fax: (760) 598-6400

August 21, 1998

Mr. Allen Lopez
C-TECH ELECTRONICS
962 E. 12th Street
Los Angeles, California 90021

Re: Unauthorized Resale, Display, and/or Advertising of DEI® Products

Dear Mr. Lopez:

Please be advised that your unauthorized selling, displaying, and/or advertising of Viper® products violates our registered trademarks (15 U.S.C.§ 1114) and federal unfair competition laws [15 U.S.C. § 11259(a)] as well as state consumer protection laws.

These violations give rise to such remedies as the forfeiture of your profits, triple damages, punitive damages and the reimbursement of our attorney's fees. *See e.g., Intel Corp. v. Terabyle Int'l, Inc.*, 6 F.3d 614 (9th Cir, 1993); *Polymer Tech. Corp v. Mimran*, 975 F.2d 58 (2d Cir. 1992); *Shell Oil Co. v. Commercial Petroleum, Inc.* 928 F.2d 104 (4th Cir. 1991); *Adolph Coors Co. v. A. Genderson & Sons, Inc.*, 486 F.Supp. 131 (D. Colo.1980).

Viper® is a proprietary product of Directed Electronics, Inc. (DEI) and is sold only through authorized dealers. Any other means of obtaining our products nullifies warranty and other consumer protection. If you continue to market or display our proprietary products without authorization or if you promote another product as a DEI product, we will not hesitate to pursue all our legal remedies, including court costs and damages.

Nevertheless, we will agree to forego legal action at this time if you (1) immediately cease and desist from marketing, selling or advertising DEI products, (2)

EXHIBIT K PAGE 98

Stipulate in writing not to do so in the future, (3) return to DEI all items bearing DEI's Viper® marks and (4) identify your source of DEI products. Should you not agree to the foregoing, we will not hesitate to bring on appropriate legal action in Federal Court against you.

Sincerely,

Glenn Busse

Glenn Busse
Vice President, Sales & Marketing

GB/jkf

cc: Regional Sales Manager 911
Legal Department

Enclosures

***Note: Please see enclosed examples of other lawsuits filed in these matters.

Please complete the following form and return it to DEI, Attn: Legal Department

The undersigned declares as follows:

1. I understand and agree that I am not authorized to sell, market, advertise and/or display any products of Directed Electronics, Inc. ("DEI").

2. I am the owner/operator of _____ _____.

3. I agree to immediately cease and desist from marketing, selling, advertising and/or displaying all DEI® products and will refrain from doing so at any time in the future.

3. I am returning all items bearing the Viper® mark, as well as any other products bearing the DEI® mark, to DEI immediately. This includes any fixtures, signs or advertising tools.

4. I obtained DEI® products from (state source) _____ _____ _____ _____

5. I understand that if I fail to comply with this request, DEI will seek legal action against me.

Executed on _____, 1998

I hereby declare that all statements made herein of my own knowledge are true and that all statements made on information and belief are believed to be true; and further, that these statements were made with the knowledge that willful false statements and the like so made are punishable by fine or imprisonment, or both, under Section 1001 of Title 18 of the United States Code.

By: _____ Its: _____
(Type or print name)

_____
(Signature)

REC'D IN
APR 0 3 1995
CLERK'S OFFICE

DISTRICT COURT, EL PASO COUNTY, COLORADO

Civil Action No. 93CV1080, Division 2

NOTICE OF RULING AND PERMANENT INJUNCTION

AUDIO PLUS, a Sole Proprietorship,

Plaintiffs,

v.

SUNSHINE RADIO, INC., d/b/a SUNSHINE AUDIO, and DIRECTED ELECTRONICS, INC.,

Defendants.

Directed Electronics, Inc. ("Directed") hereby gives actual notice of the Court's Order Regarding Motions for Summary Judgment (the "Order") and the permanent injunction contained therein. A copy of the Order is attached.

AMONG OTHER THINGS, THE COURT ENTERS A PERMANENT INJUNCTION AGAINST AUDIO PLUS AND ITS OFFICERS, AGENTS, AFFILIATES, EMPLOYEES, AND PERSONS ACTING IN ACTIVE CONCERT WITH AUDIO PLUS, FROM SELLING OR ADVERTISING DIRECTED'S AUTO SECURITY SYSTEMS (SUCH AS VIPER® CAR ALARMS), OR FROM USING DIRECTED'S TRADE MARK (VIPER®), WITHOUT SPECIFIC AUTHORIZATION FROM DIRECTED.

Dated this 3d day of April, 1994.

HOLME ROBERTS & OWEN LLC
Richard R. Young (#3278)
Dominic J. Ricotta (#19939)

Dominic J. Ricotta

Attorneys for Defendant
Directed Electronics, Inc.
90 S. Cascade Avenue, Suite 1300
Colorado Springs, CO 80903-1611
Telephone: (719) 473-3800
From Denver: (303) 623-2764

DAVID C. DOYLE, STATE BAR NO. 70690
IAN L. KESSLER, STATE BAR NO. 105899
DAVID M. BASSHAM, STATE BAR NO. 130904
BAKER & McKENZIE
Wells Fargo Plaza, Twelfth Floor
101 West Broadway
San Diego, CA 92101
Telephone: (619) 236-1441

Attorneys for DIRECTED ELECTRONICS, INC.

UNITED STATES DISTRICT COURT

CENTRAL DISTRICT OF CALIFORNIA

DIRECTED ELECTRONICS, INC., a California corporation,

Plaintiff,

v.

ACE DISTRIBUTING COMPANY, a California corporation; ANGELA M. ANDERSON, individually, and doing business as AUTO ALARM SPECIALIST; ATK INTERNATIONAL, INC., a California corporation, doing business as AUDIO GODS; DARRYL ANGELO WILSON, individually, and doing business as CAR COSMETICS; J & J BEEPERS, INC., a California corporation; ROBOCAR NETWORK, INC., a California corporation, doing business as ROBOCAR AUTO ACCESSORIES; SOHELA ANSARI KARIMIAN, also known as JERRY KARIMIAN, individually, and doing business as CNIC SOUNDS; WHOLESALE CONNECTION, INC., a California corporation; JOE GUADALUPE CAVALA, individually, and doing business as CAVALA'S AUTO STEREO; and DOES 1 through 50, inclusive,

Defendants.

CASE NO. 94 CV 443

COMPLAINT OF DIRECTED ELECTRONICS, INC. FOR:

1) FEDERAL TRADEMARK INFRINGEMENT (15 U.S.C § 1114);

2) FEDERAL UNFAIR COMPETITION AND FALSE DESIGNATION OF ORIGIN (15 U.S.C. § 1125(a));

3) TORTIOUS INTERFERENCE WITH CONTRACT;

4) STATE UNFAIR COMPETITION (CAL. BUS. & PROF. CODE § 17200);

5) STATE TRADEMARK INFRINGEMENT (CAL. BUS. & PROF. CODE § 14335);

6) DILUTION AND INJURY TO BUSINESS REPUTATION (CAL. BUS. & PROF. CODE § 14330);

7) COMMON LAW UNFAIR COMPETITION;

8) MONEY OWED

JURY TRIAL DEMANDED

16053.1

DAVID M. DOYLE, STATE BAR NO. 70690
IAN L. KESSLER, STATE BAR NO. 105899
DAVID M. BASSHAM, STATE BAR NO. 130904
BAKER & McKENZIE
Wells Fargo Plaza, Twelfth Floor
101 West Broadway
San Diego, CA 92101
Telephone: (619) 236-1441

Attorneys for DIRECTED ELECTRONICS, INC.

FILED

JUL - 1 1994

CLERK, U.S. DISTRICT CO
SOUTHERN DISTRICT OF CAL
BY

UNITED STATES DISTRICT COURT

SOUTHERN DISTRICT OF CALIFORNIA

DIRECTED ELECTRONICS, INC., a California corporation,

Plaintiff,

v.

MARK PAUL EDWARDS, individually, and doing business as AUDIO EXPRESS; JORGE M. RODRIGUEZ, individually, and doing business as CRUZIN CONNECTION; ROBERT PRESCOTT, individually, and doing business as ELECTRONICS CENTER, also known as AUTO SOUNDS ELECTRONICS CENTER; MARK PRESCOTT, individually, and doing business as ELECTRONICS CENTER, also known as AUTO SOUNDS ELECTRONICS CENTER; AMMAR SAID ALI, also known as AMMAR SAID, individually, and doing business as PRIME STEREO; ERK, INC., a California corporation, doing business as RONNIE'S ELECTRONICS; SONG IL KIM, individually, and doing business as A & A STEREO AND T.V. SERVICE CENTER; and DOES 1 through 50, inclusive.

Defendants.

CASE NO. 941038 GT (RBB)

COMPLAINT OF DIRECTED ELECTRONICS, INC. FOR:

1) FEDERAL TRADEMARK INFRINGEMENT (15 U.S.C. § 1114);

2) FEDERAL UNFAIR COMPETITION AND FALSE DESIGNATION OF ORIGIN (15 U.S.C. § 1125(a));

3) TORTIOUS INTERFERENCE WITH CONTRACT;

4) STATE UNFAIR COMPETITION (CAL. BUS. & PROF. CODE § 17200);

5) STATE TRADEMARK INFRINGEMENT (CAL. BUS. & PROF. CODE § 14335);

6) DILUTION AND INJURY TO BUSINESS REPUTATION (CAL. BUS. & PROF. CODE § 14330);

7) COMMON LAW UNFAIR COMPETITION

JURY TRIAL DEMANDED

Baker & McKenzie
101 West Broadway
Twelfth Floor
San Diego, CA 92101
(619) 236-1441

25726.1

New Jersey

UNITED STATES DISTRICT COURT

FOR THE DISTRICT OF NEW JERSEY

Paul J. Hirsh, Esq.
Beth R. Stearns, Esq.
WHIPPLE, ROSS & HIRSH, P.A.
9 Campus Drive
Parsippany, New Jersey 07054-4496
201-538-5500
PJH 5941
BRS 6028
Attorneys for Plaintiff DIRECTED ELECTRONICS, INC.

ORIGINAL FILED
JUL 1 1 1994
WILLIAM T. WALSH, CLERK

DIRECTED ELECTRONICS, INC., a California corporation,

Plaintiff,

v.

BRAVO ELECTRONICS, INC., a New York corporation, BIG CITY SOUNDS, INC., a New Jersey corporation, AUTO CHECK ALARMS, INC., a New Jersey corporation, and DOES 1 through 50, inclusive,

Defendants.

CIVIL ACTION NO. 94-3251 (AM

COMPLAINT AND JURY DEMAND

1) FEDERAL TRADEMARK INFRINGEMENT (15 U.S.C. § 1114);

2) FEDERAL UNFAIR COMPETITION AND FALSE DESIGNATION OF ORIGIN (15 U.S.C. § 1125(a));

3) TORTIOUS INTERFERENCE WITH PROSPECTIVE ECONOMIC ADVANTAGE;

4) STATE COMMON LAW UNFAIR COMPETITION;

5) STATE UNFAIR COMPETITION (N.J.S.A. 56:4-1, et seq.

POSTMARKED 7/12/94
CLIENT NO. 6706751-930
AUG 15 1994
ENTIRE COPY DMB
CAPTION PG ILK IDCD
CALENDAR ONLY

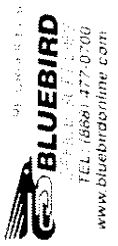
BLUEBIRD
TEL (888) 477-0700
www.bluebirdonline.com

Directed Electronics, Inc.

Acct#: 900611
Date Rec'd: 5/1/97
By: Marie
FOR DEI USE ONLY

1997/98 Authorized Dealer Agreement

This agreement is made this 17th day of April, 1997 between Directed Electronics, Inc. ("DEI"), a California corporation, located at 2560 Progress Street, Vista, CA 92083, and WON SIK IM dba SOUNDMASTER ("Authorized Dealer"), having its principal place of business located at 7519 ALONDRA BLVD (Street Address) PARAMOUNT (City) CA (State) 90723 (Zip)

Contact Telephone number (562) 602-0780. The above address is a (type of facility) located in DEI market ID# 7915

1. Authorized Dealer's Functions

1.01 Appointment of Authorized Dealer: DEI agrees to appoint Authorized Dealer and Authorized *Dealer agrees to serve as a non-exclusive retail* Dealer, based upon the terms and conditions set forth in this agreement and only at the location set forth above or where applicable, the additional locations set forth in Schedule A to this agreement. In consideration of its appointment as a DEI Retail Dealer, the Authorized Dealer agrees to:

A. Utilize its best efforts to promote and sell the authorized products within its specified market area.
B. Maintain quality facilities for on-premise demonstration and sale of DEI products.
C. Maintain an Installation Facility, owned, staffed and *operated by the Authorized Dealer and which meets* all requirements established by DEI.
D. Keep confidential any and all correspondence and/or material from DEI that is marked as such.
E. Sell Authorized Products installed only and only to end users.

1.02 The Authorized Product: The Authorized Dealer agrees to order and sell only the DEI product line(s) that have been authorized by this agreement. The authorized product line(s) authorized by this Agreement are

VIPER
PYTHON

These are the "Authorized Products."

2. Authorized Dealer Location

2.01 Authorized Dealer agrees not to offer any DEI products for sale at any location other than the approved location(s) listed in this agreement. Schedule "A" is used for additional Authorized Locations.

2.02 Authorized Dealer agrees that any change in location of business(es) will be communicated to DEI.

3. Advertising

Authorized Dealer agrees not to advertise or engage in promotion activities concerning any DEI products unless:

A. Authorized Dealer has a sufficient supply of these products on hand to meet anticipated demand.
B. All references to DEI's registered trademarks shall state that the name is a registered trademark.

4. Warranties

Authorized Dealer agrees to honor DEI's published warranty to all customers to whom the Authorized Dealer sells or has sold DEI products. Authorized Dealer shall make no warranties or guarantees with respect to products or to use of products except as authorized by DEI in writing. Sales shall be made under DEI's warranty in effect at the time of sale. Authorized Dealer agrees to furnish to each retail purchaser all warranty cards or similar material provided by DEI.

5. Nationwide Assistance Program

5.01 From time to time, a DEI customer may be traveling throughout the country. If this customer should happen to be a long distance (more than 75 miles) from the DEI Dealer that originally installed the product and experience a problem with a DEI product, he qualifies for our Nationwide Assistance Program. To maintain a Nationwide Assistance Program for all DEI customers, all DEI Authorized Dealers shall provide Warranty Assistance to any DEI Customer traveling in their local area, provided:

A. The DEI product was installed by an Authorized Dealer.
B. The customer is more than 75 miles away or outside the original sales market area from the installing Authorized Dealer.
C. The product in question is under DEI warranty.
D. The servicing Authorized Dealer is authorized to sell the product line in question.

5.02 Provided the customer meets the above listed requirements, the Authorized Dealer agrees to honor the DEI warranty on the product in question and provide the customer with:

A. Free diagnosis of system problem (limited to product failure only). In cases of installation problems, Authorized Dealer may charge its normal labor rates.
B. Replacement (provided the Dealer has the component *in question in stock) or bypass of defective compo*nent(s).
C. In case Authorized Dealer does not have the necessary parts, Dealer will use best efforts to obtain such parts.

5.03 If the customer cannot provide proof that they are eligible for the Nationwide Assistance Program or provided no failure or defect is found, the Authorized Dealer reserves the right to charge this customer any and all of its normal charges.

6. Term and Termination

6.01 The term of this agreement shall be from the date it is *signed through January 31, 1998, to be renewed* annually upon the mutual agreement of the parties.

6.02 Either party may terminate this agreement without cause, effective immediately upon written notice being delivered to the other party.

6.03 As of the effective date of termination, unfilled Dealer orders shall be deemed canceled and for thirty (30) days from that date DEI shall have the option to pur-

© 1996, Directed Electronics, Inc. 2560 Progress Street, Vista, CA 92083 (800) 876-0800 Fax: (619) 598-6400

Form 8

chase from the Dealer and the Dealer agrees to sell to DEI all or any part of the DEI products then in the Dealer's stock at the prices the Dealer paid for the product less any discounts and unearned allowances paid to the Dealer. Upon exercise of this option, the Dealer agrees to ship the DEI products to DEI at DEI's expense.

6.04 As of the effective date of termination, the Dealer shall refrain from selling any previously Authorized Products and from any conduct which would make it appear that it is an authorized DEI Dealer. Dealer shall promptly remove from its letterheads, advertising literature, and signage at all authorized locations, and from all telephone and other business directories of any kind all references to the DEI products. Dealer shall promptly refrain from acting as an authorized Dealer with respect to the products or on behalf of DEI and thereafter shall not use any corporate name, trade name or trademark tending to give the impression that any relationship still exists between DEI and the Dealer. The Dealer agrees to ship to DEI, all advertising and/or sales materials bearing DEI's name or trademarks that was provided by DEI.

7. Miscellaneous

7.01 Non-Assignment: Dealer shall not have the right to assign, transfer or sell its rights under this Agreement and any such assignment, transfer or sale of rights by Dealer is void unless approved in writing by DEI.

7.02 Indemnification: Dealer agrees to indemnify and hold DEI harmless from and against any and all claims, damages, and liabilities whatsoever, asserted by any person or entity resulting directly or indirectly from any breach by the Dealer of this Agreement and such indemnification shall include the payment of all costs and reasonable attorney's fees expended by DEI in defending such claims.

7.03 Governing Law: This agreement is deemed to have been entered into in Vista, California, and shall be governed by the laws of the State of California. All questions concerning validity, interpretation, or performance of any of the terms of this Agreement, or determination of any rights or obligations of the parties thereto, shall be resolved or litigated in courts in San Diego County, California, regardless of where the Agreement is executed, and shall be governed by the laws of the State of California ,without regard to conflicts of laws. In the event of any action or proceeding, including arbitration, to enforce this agreement or any of its provisions, or to declare the rights of the parties with respect to this Agreement, the prevailing party shall be entitled to reasonable Attorney's fees and court costs.

7.04 Severability: If any provisions of this agreement are unenforceable or invalid for any reason whatsoever, such unenforceability or invalidity shall not affect the enforceability of the remainder of this Agreement. Any such unenforceable or invalid provision shall be severable from the remainder of this Agreement, which shall remain enforceable.

7.05 No Waivers: No waivers of this Agreement shall be enforceable unless in writing.

7.06 License of Trademarks, Copyrights and Patents; Dealer shall have the nonexclusive, terminable at will license to use, in a manner designated solely by DEI, DEI trademarks, copyrights and patents in conjunction with selling DEI products under this agreement. This license is revocable at will by DEI. This license shall absolutely expire at the termination of this agreement and further use of said marks, copyrights or patents shall constitute infringement of DEI property rights. Dealer specifically covenants to cease all use of the marks, copyrights, patents or trade secrets which are Federally registered property or Common Law property of DEI upon receipt of actual notice from DEI.

	DEI Approval:
Dealer Name (Print Name of Authorized Signature) WON SIK JM	RSM initials
Dealer Signature (Authorized Signature)	Date
Title PRESIDENT.	Approved By
Date 4/17/97	Date

© 1996, Directed Electronics, Inc. 2560 Progress Street, Vista, CA 92083 (800) 876-0800 Fax: (619) 598-6400

Directed Electronics, Inc.

Acct#:	900611
Date Rec'd:	11 5 97
By:	[signature]
FOR DEI USE ONLY	

1998/99 Renewal Form (Confidential)

This renewal is effective as of this 21st day of October, 1997, between Directed Electronics, Inc. ("DEI"), a California corporation, located at 2560 Progress Street, Vista, CA 92083 and Won Sik Im, dba Soundmaster, ("Authorized Dealer"), to renew the Authorized Dealer Agreement for the 1998/99 year.

The authorized DEI product line(s) by this renewal are: Viper / Python Audio.

These are the "Authorized Products."

1. This renewal incorporates the agreements executed by the parties heretofore. This renewal is evidentiary of Parties' mutual desire to continue with their respective contractual rights and obligations. The Agreement/contracts shall continue until terminated at will, at any time, with or without cause by either DEI or the Dealer (either party).

2. For your convenience we have printed your customer profile below. Verify the accuracy of this data and make the necessary corrections or additions in the space provided. Initial here to confirm that you have reviewed the account information below: x [initials]

Customer Number:	900611	**Street:**	~~13000 S. AVALON BLVD~~, 7519 Alondra Blvd.
Name:	SOUNDMASTER	**City, State:**	~~LOS ANGELES, CA~~ Paramount, Ca.
Contact:	WON SIK IM	**Postal Code:**	~~90061~~ 90723
Authorized Lines:	97 VV---P--M--	**Phone:**	~~310-527-2853~~ 562-602-0780
Sales Representative:	R915	**Fax:**	~~310-527-2859~~

3. Have there been any ownership changes, changes in company principals or new partners?
   ☒ No ☐ Yes If yes, please complete the attached Customer Information form.
   Have there been any changes to your Billing or Shipping address(es)?
   ☐ No ☒ Yes If yes, please write your new address below:
   7519 ALONDRA BLVD, PARAMOUNT, CA. 90723

4. Have you added or closed any authorized locations?
   ☒ No ☐ Yes If yes, please complete the attached "Schedule A"

5. Have you changed bank or banking account since you signed the previous Authorized Dealer Agreement?
   ☒ No ☐ Yes If yes, please complete the 1997/98 Customer Information Form.

The undersigned confirms of information accuracy and release of authority to verify.

Dealer Name: Won Sik Im

Signature: x [signature]

Title: Owner Date 10-21-97

DEI Approval By: [signature] Date: 10-21-97

AOM97-2
5/97

© 1997, Directed Electronics, Inc. 2560 Progress Street, Vista, CA 92083 (800) 876-0800 Fax: (760) 598-6400

AO 120 (3/85)

TO: **Commissioner of Patents and Trademarks Washington, D.C. 20231**	**REPORT ON THE FILING OR DETERMINATION OF AN ACTION REGARDING A PATENT**

In compliance with the Act of July 19, 1952 (66 Stat. 814; 35 U.S.C. 290) you are hereby advised that a court action has been filed on the following patent(s) in the U.S. District Court:

DOCKET NO.	DATE FILED	U.S. DISTRICT COURT
00CV1350JM(POR)	07/07/00	United States District Court, Southern District of California
PLAINTIFF		DEFENDANT
Directed Electronics, Inc.		Sound Master, Inc.; Won Sik Im
PATENT NO.	**DATE OF PATENT**	**PATENTEE**
1 1,756,693	03/09/1993	Directed Electronics, Inc.
2 1,822,608	02/22/1994	Directed Electronics, Inc.
3 1,873,747	01/17/1995	Directed Electronics, Inc.
4 2,218,082	01/19/1999	Directed Electronics, Inc.
5 1,848,176	08/02/1994	Directed Electronics, Inc.

In the above-entitled case, the following patent(s) have been included:

DATE INCLUDED	INCLUDED BY ☐ Amendment ☐ Answer ☐ Cross Bill ☐ Other Pleading	
PATENT NO.	**DATE OF PATENT**	**PATENTEE**
6 Des. 345,711	04/05/1994	Darrell E. Issa
7 4,584,569	04/22/1986	Michael J. Lopez; Howard A. Williams, Jr.; Henry J. Salvatori
8 5,532,670	07/02/1996	Darrell E. Issa; Jerry W. Birchfield
9 5,646,591	07/08/1997	Darrell E. Issa; Jerry Birchfield
10 1,961,709	03/12/1996	Trademark - Viper

In the above-entitled case, the following decision has been rendered or judgment issued:

DECISION/JUDGMENT		
CLERK	(BY) DEPUTY CLERK	DATE

Copy 1 - Upon initiation of action, mail this copy to Commissioner Copy 3 - Upon termination of action, mail this copy to Commissioner

Copy 2 - Upon filing document adding patent(s), mail this copy to Commissioner Copy 4 - Case file copy

AO 120 (3/85)

TO: Commissioner of Patents and Trademarks Washington, D.C. 20231	REPORT ON THE FILING OR DETERMINATION OF AN ACTION REGARDING A PATENT

In compliance with the Act of July 19, 1952 (66 Stat. 814; 35 U.S.C. 290) you are hereby advised *that a court action has been filed on the following patent(s) in the U.S. District Court:*

DOCKET NO.	DATE FILED	U.S. DISTRICT COURT
00CV1350JM(POR)	07/07/00	United States District Court, Southern District of California
PLAINTIFF		DEFENDANT
Directed Electronics, Inc.		Sound Master, Inc.; Won Sik Im

PATENT NO.	DATE OF PATENT	PATENTEE
1 1,756,693	03/09/1993	Directed Electronics, Inc.
2 1,822,608	02/22/1994	Directed Electronics, Inc.
3 1,873,747	01/17/1995	Directed Electronics, Inc.
4 2,218,082	01/19/1999	Directed Electronics, Inc.
5 1,848,176	08/02/1994	Directed Electronics, Inc.

In the above-entitled case, the following patent(s) have been included:

DATE INCLUDED	INCLUDED BY ☐ Amendment ☐ Answer ☐ Cross Bill ☐ Other Pleading	
PATENT NO.	**DATE OF PATENT**	**PATENTEE**
6 Des. 345,711	04/05/1994	Darrell E. Issa
7 4,584,569	04/22/1986	Michael J. Lopez; Howard A. Williams, Jr.; Henry J. Salvatori
8 5,532,670	07/02/1996	Darrell E. Issa; Jerry W. Birchfield
9 5,646,591	07/08/1997	Darrell E. Issa; Jerry Birchfield
10 1,961,709	03/12/1996	Trademark - Viper

In the above-entitled case, the following decision has been rendered or judgment issued:

DECISION/JUDGMENT		
CLERK	(BY) DEPUTY CLERK	DATE

Copy 1 - Upon initiation of action, mail this copy to Commissioner Copy 3 - Upon termination of action, mail this copy to Commissioner
Copy 2 - Upon filing document adding patent(s), mail this copy to Commissioner Copy 4 - Case file copy

AO 120 (3/85)

TO: **Commissioner of Patents and Trademarks Washington, D.C. 20231**	**REPORT ON THE FILING OR DETERMINATION OF AN ACTION REGARDING A PATENT**

In compliance with the Act of July 19, 1952 (66 Stat. 814; 35 U.S.C. 290) you are hereby advised *that a court action has been filed on the following patent(s) in the U.S. District Court:*

DOCKET NO. 00CV1350JM(POR)	DATE FILED 07/07/00	U.S. DISTRICT COURT United States District Court, Southern District of California
PLAINTIFF Directed Electronics, Inc.		DEFENDANT Sound Master, Inc.; Won Sik Im
PATENT NO.	**DATE OF PATENT**	**PATENTEE**
1 1,756,693	03/09/1993	Directed Electronics, Inc.
2 1,822,608	02/22/1994	Directed Electronics, Inc.
3 1,873,747	01/17/1995	Directed Electronics, Inc.
4 2,218,082	01/19/1999	Directed Electronics, Inc.
5 1,848,176	08/02/1994	Directed Electronics, Inc.

In the above-entitled case, the following patent(s) have been included:

DATE INCLUDED	INCLUDED BY ☐ Amendment ☐ Answer ☐ Cross Bill ☐ Other Pleading	
PATENT NO.	**DATE OF PATENT**	**PATENTEE**
6 Des. 345,711	04/05/1994	Darrell E. Issa
7 4,584,569	04/22/1986	Michael J. Lopez; Howard A. Williams, Jr.; Henry J. Salvatori
8 5,532,670	07/02/1996	Darrell E. Issa; Jerry W. Birchfield
9 5,646,591	07/08/1997	Darrell E. Issa; Jerry Birchfield
10 1,961,709	03/12/1996	Trademark - Viper

In the above-entitled case, the following decision has been rendered or judgment issued:

DECISION/JUDGMENT		
CLERK	(BY) DEPUTY CLERK	DATE

Copy 1 - Upon initiation of action, mail this copy to Commissioner Copy 3 - Upon termination of action, mail this copy to Commissioner

Copy 2 - Upon filing document adding patent(s), mail this copy to Commissioner Copy 4 - Case file copy

AO 120 (3/85)

TO: **Commissioner of Patents and Trademarks Washington, D.C. 20231**	**REPORT ON THE FILING OR DETERMINATION OF AN ACTION REGARDING A PATENT**

In compliance with the Act of July 19, 1952 (66 Stat. 814; 35 U.S.C. 290) you are hereby advised that a court action has been filed on the following patent(s) in the U.S. District Court:

DOCKET NO.	DATE FILED	U.S. DISTRICT COURT
00CV1350JM(POR)	07/07/00	United States District Court, Southern District of California
PLAINTIFF		DEFENDANT
Directed Electronics, Inc.		Sound Master, Inc.; Won Sik Im
PATENT NO.	**DATE OF PATENT**	**PATENTEE**
11 1,924,872	10/03/1995	Trademark - Warn Away
12 2,301,471	12/21/1999	Trademark - Bitwriter
13 2,301,162	12/21/1999	Trademark - Code-Hopping
14 1,943,761	12/26/1995	Trademark - Code Plus
15 2,315,849	02/08/2000	Trademark - ESP

In the above-entitled case, the following patent(s) have been included:

DATE INCLUDED	INCLUDED BY ☐ Amendment ☐ Answer ☐ Cross Bill ☐ Other Pleading	
PATENT NO.	**DATE OF PATENT**	**PATENTEE**
16 1,709,910	08/25/1992	Trademark - Failsafe
17 2,291,545	11/09/1999	Trademark - NPC
18 1,938,559	11/21/1995	Trademark - Nuisance Prevention
19 1,962,705	03/19/1996	Trademark - Revenger
20 1,949,768	01/16/1996	Trademark - Soft Chirp

In the above-entitled case, the following decision has been rendered or judgment issued:

DECISION/JUDGMENT		
CLERK	(BY) DEPUTY CLERK	DATE

Copy 1 - Upon initiation of action, mail this copy to Commissioner Copy 3 - Upon termination of action, mail this copy to Commissioner

Copy 2 - Upon filing document adding patent(s), mail this copy to Commissioner Copy 4 - Case file copy

AO 120 (3/85)

TO: **Commissioner of Patents and Trademarks Washington, D.C. 20231**	**REPORT ON THE FILING OR DETERMINATION OF AN ACTION REGARDING A PATENT**

In compliance with the Act of July 19, 1952 (66 Stat. 814; 35 U.S.C. 290) you are hereby advised that a court action has been filed on the following patent(s) in the U.S. District Court:

DOCKET NO. 00CV1350JM(POR)	DATE FILED 07/07/00	U.S. DISTRICT COURT United States District Court, Southern District of California
PLAINTIFF Directed Electronics, Inc.		DEFENDANT Sound Master, Inc.; Won Sik Im
PATENT NO.	**DATE OF PATENT**	**PATENTEE**
11 1,924,872	10/03/1995	Trademark - Warn Away
12 2,301,471	12/21/1999	Trademark - Bitwriter
13 2,301,162	12/21/1999	Trademark - Code-Hopping
14 1,943,761	12/26/1995	Trademark - Code Plus
15 2,315,849	02/08/2000	Trademark - ESP

In the above-entitled case, the following patent(s) have been included:

DATE INCLUDED	INCLUDED BY ☐ Amendment ☐ Answer ☐ Cross Bill ☐ Other Pleading	
PATENT NO.	**DATE OF PATENT**	**PATENTEE**
16 1,709,910	08/25/1992	Trademark - Failsafe
17 2,291,545	11/09/1999	Trademark - NPC
18 1,938,559	11/21/1995	Trademark - Nuisance Prevention
19 1,962,705	03/19/1996	Trademark - Revenger
20 1,949,768	01/16/1996	Trademark - Soft Chirp

In the above-entitled case, the following decision has been rendered or judgment issued:

DECISION/JUDGMENT		
CLERK	(BY) DEPUTY CLERK	DATE

Copy 1 - Upon initiation of action, mail this copy to Commissioner Copy 3 - Upon termination of action, mail this copy to Commissioner

Copy 2 - Upon filing document adding patent(s), mail this copy to Commissioner Copy 4 - Case file copy

AO 120 (3/85)

TO: **Commissioner of Patents and Trademarks Washington, D.C. 20231**	**REPORT ON THE FILING OR DETERMINATION OF AN ACTION REGARDING A PATENT**

In compliance with the Act of July 19, 1952 (66 Stat. 814; 35 U.S.C. 290) you are hereby advised that a court action has been filed on the following patent(s) in the U.S. District Court:

DOCKET NO.	DATE FILED	U.S. DISTRICT COURT
00CV1350JM(POR)	07/07/00	United States District Court, Southern District of California
PLAINTIFF		DEFENDANT
Directed Electronics, Inc.		Sound Master, Inc.; Won Sik Im
PATENT NO.	**DATE OF PATENT**	**PATENTEE**
11 1,924,872	10/03/1995	Trademark - Warn Away
12 2,301,471	12/21/1999	Trademark - Bitwriter
13 2,301,162	12/21/1999	Trademark - Code-Hopping
14 1,943,761	12/26/1995	Trademark - Code Plus
15 2,315,849	02/08/2000	Trademark - ESP

In the above-entitled case, the following patent(s) have been included:

DATE INCLUDED	INCLUDED BY ☐ Amendment ☐ Answer ☐ Cross Bill ☐ Other Pleading	
PATENT NO.	**DATE OF PATENT**	**PATENTEE**
16 1,709,910	08/25/1992	Trademark - Failsafe
17 2,291,545	11/09/1999	Trademark - NPC
18 1,938,559	11/21/1995	Trademark - Nuisance Prevention
19 1,962,705	03/19/1996	Trademark - Revenger
20 1,949,768	01/16/1996	Trademark - Soft Chirp

In the above-entitled case, the following decision has been rendered or judgment issued:

DECISION/JUDGMENT		
CLERK	(BY) DEPUTY CLERK	DATE

Copy 1 - Upon initiation of action, mail this copy to Commissioner Copy 3 - Upon termination of action, mail this copy to Commissioner

Copy 2 - Upon filing document adding patent(s), mail this copy to Commissioner Copy 4 - Case file copy

AO 120 (3/85)

TO: **Commissioner of Patents and Trademarks Washington, D.C. 20231**	**REPORT ON THE FILING OR DETERMINATION OF AN ACTION REGARDING A PATENT**

In compliance with the Act of July 19, 1952 (66 Stat. 814; 35 U.S.C. 290) you are hereby advised *that a court action has been filed on the following patent(s) in the U.S. District Court:*

DOCKET NO. 00CV1350JM(POR)	DATE FILED 07/07/00	U.S. DISTRICT COURT United States District Court, Southern District of California
PLAINTIFF Directed Electronics, Inc.		DEFENDANT Sound Master, Inc.; Won Sik Im
PATENT NO.	**DATE OF PATENT**	**PATENTEE**
21 1,937,900	11/28/1995	Trademark - Stinger
22 1,721,572	10/06/1992	Trademark - Valet
23 1,831,266	04/19/1994	Trademark - -VRS
4		
5		

In the above-entitled case, the following patent(s) have been included:

DATE INCLUDED	INCLUDED BY ☐ Amendment ☐ Answer ☐ Cross Bill ☐ Other Pleading	
PATENT NO.	**DATE OF PATENT**	**PATENTEE**
1		
2		
3		
4		
5		

In the above-entitled case, the following decision has been rendered or judgment issued:

DECISION/JUDGMENT		
CLERK	(BY) DEPUTY CLERK	DATE

Copy 1 - Upon initiation of action, mail this copy to Commissioner Copy 3 - Upon termination of action, mail this copy to Commissioner

Copy 2 - Upon filing document adding patent(s), mail this copy to Commissioner Copy 4 - Case file copy

AO 120 (3/85)

TO: **Commissioner of Patents and Trademarks Washington, D.C. 20231**	**REPORT ON THE FILING OR DETERMINATION OF AN ACTION REGARDING A PATENT**

In compliance with the Act of July 19, 1952 (66 Stat. 814; 35 U.S.C. 290) you are hereby advised that a court action has been filed on the following patent(s) in the U.S. District Court:

DOCKET NO. 00CV1350JM(POR)	DATE FILED 07/07/00	U.S. DISTRICT COURT United States District Court, Southern District of California
PLAINTIFF Directed Electronics, Inc.		DEFENDANT Sound Master, Inc.; Won Sik Im
PATENT NO.	**DATE OF PATENT**	**PATENTEE**
21 1,937,900	11/28/1995	Trademark - Stinger
22 1,721,572	10/06/1992	Trademark - Valet
23 1,831,266	04/19/1994	Trademark - -VRS
4		
5		

In the above-entitled case, the following patent(s) have been included:

DATE INCLUDED	INCLUDED BY ☐ Amendment ☐ Answer ☐ Cross Bill ☐ Other Pleading	
PATENT NO.	**DATE OF PATENT**	**PATENTEE**
1		
2		
3		
4		
5		

In the above-entitled case, the following decision has been rendered or judgment issued:

DECISION/JUDGMENT		
CLERK	(BY) DEPUTY CLERK	DATE

Copy 1 - Upon initiation of action, mail this copy to Commissioner Copy 3 - Upon termination of action, mail this copy to Commissioner

Copy 2 - Upon filing document adding patent(s), mail this copy to Commissioner Copy 4 - Case file copy

AO 120 (3/85)

TO: **Commissioner of Patents and Trademarks Washington, D.C. 20231**	**REPORT ON THE FILING OR DETERMINATION OF AN ACTION REGARDING A PATENT**

In compliance with the Act of July 19, 1952 (66 Stat. 814; 35 U.S.C. 290) you are hereby advised that a court action has been filed on the following patent(s) in the U.S. District Court:

DOCKET NO.	DATE FILED	U.S. DISTRICT COURT
00CV1350JM(POR)	07/07/00	United States District Court, Southern District of California
PLAINTIFF		DEFENDANT
Directed Electronics, Inc.		Sound Master, Inc.; Won Sik Im

PATENT NO.	DATE OF PATENT	PATENTEE
21 1,937,900	11/28/1995	Trademark - Stinger
22 1,721,572	10/06/1992	Trademark - Valet
23 1,831,266	04/19/1994	Trademark - -VRS
4		
5		

In the above-entitled case, the following patent(s) have been included:

DATE INCLUDED	INCLUDED BY ☐ Amendment ☐ Answer ☐ Cross Bill ☐ Other Pleading	
PATENT NO.	**DATE OF PATENT**	**PATENTEE**
1		
2		
3		
4		
5		

In the above-entitled case, the following decision has been rendered or judgment issued:

DECISION/JUDGMENT		
CLERK	(BY) DEPUTY CLERK	DATE

Copy 1 - Upon initiation of action, mail this copy to Commissioner Copy 3 - Upon termination of action, mail this copy to Commissioner

Copy 2 - Upon filing document adding patent(s), mail this copy to Commissioner Copy 4 - Case file copy

ORIGINAL

JS 44
(Rev. 3/99)

CIVIL COVER SHEET

The JS-44 civil cover sheet and the information contained herein neither replace nor supplement the filing and service of pleadings or other papers as required by law, except as provided by local rules of court. This form, approved by the Judicial Conference of the United States in September 1974, is required for the use of the Clerk of Court for the purpose of initiating the civil docket sheet. (SEE INSTRUCTIONS ON THE REVERSE OF THE FORM.)

00CV 01350 JM (POR)

I. (a) PLAINTIFFS
DIRECTED ELECTRONICS, INC., a California corporation

DEFENDANTS
SOUND MASTER, INC., a California corporation; and WON SIK IM, an individual, doing business as K.J. STEREO and C-TECH ELECTRONICS WHOLESALE

(b) COUNTY OF RESIDENCE OF FIRST LISTED PLAINTIFF SAN DIEGO
(EXCEPT IN U.S. PLAINTIFF CASES)

COUNTY OF RESIDENCE OF FIRST LISTED DEFENDANT LOS ANGELES
(IN U.S. PLAINTIFF CASES ONLY)
NOTE: IN LAND CONDEMNATION CASES, USE THE LOCATION OF THE TRACT OF LAND INVOLVED.

(c) ATTORNEYS (FIRM NAME, ADDRESS, AND TELEPHONE NUMBER)
Steve Korniczky (State Bar No. 135532)
BROBECK, PHLEGER & HARRISON LLP
12390 El Camino Real
San Diego, CA 92130 Ph: (858) 720-2500

ATTORNEYS (IF KNOWN)

FILED 2:39

II. BASIS OF JURISDICTION (PLACE AN "X" IN ONE BOX ONLY)

- ☐ 1 U.S. Government Plaintiff
- ☒ 3 Federal Question (U.S. Government Not a Party)
- ☐ 2 U.S. Government Defendant
- ☐ 4 Diversity (Indicate Citizenship of Parties in Item III)

III. CITIZENSHIP OF PRINCIPAL PARTIES (PLACE AN "X" IN ONE BOX FOR PLAINTIFF AND ONE BOX FOR DEFENDANT)
(For Diversity Cases Only)

	PTF	DEF		PTF	DEF
Citizen of This State	☐ 1	☐ 1	Incorporated or Principal Place of Business In This State	☐ 4	☐ 4
Citizen of Another State	☐ 2	☐ 2	Incorporated and Principal Place of Business In Another State	☐ 5	☐ 5
Citizen or Subject of a Foreign Country	☐ 3	☐ 3	Foreign Nation	☐ 6	☐ 6

IV. NATURE OF SUIT (PLACE AN "X" IN ONE BOX ONLY)

CONTRACT
- ☐ 110 Insurance
- ☐ 120 Marine
- ☐ 130 Miller Act
- ☐ 140 Negotiable Instrument
- ☐ 150 Recovery of Overpayment & Enforcement of Judgment
- ☐ 151 Medicare Act
- ☐ 152 Recovery of Defaulted Student Loans (Excl. Veterans)
- ☐ 153 Recovery of Overpayment of Veteran's Benefits
- ☐ 160 Stockholders' Suits
- ☐ 190 Other Contract
- ☐ 195 Contract Product Liability

REAL PROPERTY
- ☐ 210 Land Condemnation
- ☐ 220 Foreclosure
- ☐ 230 Rent Lease & Ejectment
- ☐ 240 Torts to Land
- ☐ 245 Tort Product Liability
- ☐ 290 All Other Real Property

TORTS

PERSONAL INJURY
- ☐ 310 Airplane
- ☐ 315 Airplane Product Liability
- ☐ 320 Assault, Libel & Slander
- ☐ 330 Federal Employers Liability
- ☐ 340 Marine
- ☐ 345 Marine Product Liability
- ☐ 350 Motor Vehicle
- ☐ 355 Motor Vehicle Product Liability
- ☐ 360 Other Personal Injury

PERSONAL INJURY
- ☐ 362 Personal Injury - Med. Malpractice
- ☐ 365 Personal Injury - Product Liability
- ☐ 368 Asbestos Personal Injury Product Liability

PERSONAL PROPERTY
- ☐ 370 Other Fraud
- ☐ 371 Truth in Lending
- ☐ 380 Other Personal Property Damage
- ☐ 385 Property Damage Product Liability

CIVIL RIGHTS
- ☐ 441 Voting
- ☐ 442 Employment
- ☐ 443 Housing/ Accommodations
- ☐ 444 Welfare
- ☐ 440 Other Civil Rights

PRISONER PETITIONS
- ☐ 510 Motions to Vacate Sentence

HABEAS CORPUS:
- ☐ 530 General
- ☐ 535 Death Penalty
- ☐ 540 Mandamus & Other
- ☐ 550 Civil Rights
- ☐ 555 Prison Condition

FORFEITURE/PENALTY
- ☐ 610 Agriculture
- ☐ 620 Other Food & Drug
- ☐ 625 Drug Related Seizure of Property 21 USC 881
- ☐ 630 Liquor Laws
- ☐ 640 R.R. & Truck
- ☐ 650 Airline Regs.
- ☐ 660 Occupational Safety/Health
- ☐ 690 Other

LABOR
- ☐ 710 Fair Labor Standards Act
- ☐ 720 Labor/Mgmt. Relations
- ☐ 730 Labor/Mgmt. Reporting & Disclosure Act
- ☐ 740 Railway Labor Act
- ☐ 790 Other Labor Litigation
- ☐ 791 Empl. Ret. Inc. Security Act

BANKRUPTCY
- ☐ 422 Appeal 28 USC 158
- ☐ 423 Withdrawal 28 USC 157

PROPERTY RIGHTS
- ☐ 820 Copyrights
- ☒ 830 Patent
- ☐ 840 Trademark

SOCIAL SECURITY
- ☐ 861 HIA (1395ff)
- ☐ 862 Black Lung (923)
- ☐ 863 DIWC/DIWW (405(g))
- ☐ 864 SSID Title XVI
- ☐ 865 RSI (405(g))

FEDERAL TAX SUITS
- ☐ 870 Taxes (U.S. Plaintiff or Defendant)
- ☐ 871 IRS - Third Party 26 USC 7609

OTHER STATUTES
- ☐ 400 State Reapportionment
- ☐ 410 Antitrust
- ☐ 430 Banks and Banking
- ☐ 450 Commerce/ICC Rates/etc.
- ☐ 460 Deportation
- ☐ 470 Racketeer Influenced and Corrupt Organizations
- ☐ 810 Selective Service
- ☐ 850 Securities/Commodities/ Exchange
- ☐ 875 Customer Challenge 12 USC 3410
- ☐ 891 Agricultural Acts
- ☐ 892 Economic Stabilization Act
- ☐ 893 Environmental Matters
- ☐ 894 Energy Allocation Act
- ☐ 895 Freedom of Information Act
- ☐ 900 Appeal of Fee Determination Under Equal Access to Justice
- ☐ 950 Constitutionality of State Statutes
- ☐ 890 Other Statutory Actions

V. ORIGIN (PLACE AN "X" IN ONE BOX ONLY)

☒ 1 Original Proceeding | ☐ 2 Removed from State Court | ☐ 3 Remanded from Appellate Court | ☐ 4 Reinstated or Reopened | ☐ 5 Transferred from another district (specify) | ☐ 6 Multidistrict Litigation | ☐ 7 Appeal to District Judge from Magistrate Judgment

VI. CAUSE OF ACTION (CITE THE U.S. CIVIL STATUTE UNDER WHICH YOU ARE FILING AND WRITE A BRIEF STATEMENT OF CAUSE. DO NOT CITE JURISDICTIONAL STATUTES UNLESS DIVERSITY.) 35 U.S.C. Section 271 and 15 U.S.C. Section 1114; Patent and trademark infringement.

VII. REQUESTED IN COMPLAINT: ☐ CHECK IF THIS IS A CLASS ACTION UNDER F.R.C.P. 23 **DEMAND $** > 20,000 CHECK YES only if demanded in complaint: JURY DEMAND: ☒ YES ☐ NO

VIII. RELATED CASE(S) IF ANY (See instructions): JUDGE See Notice, filed DOCKET NUMBER concurrently herewith

DATE June 29, 2000 SIGNATURE OF ATTORNEY OF RECORD

FOR OFFICE USE ONLY
RECEIPT # 01901 AMOUNT $150 APPLYING IFP JUDGE MAG. JUDGE

FDJS44