ORIGINAL

FILED
08 FEB 15 PM 3:13
CLERK, U.S. DISTRICT COURT
SOUTHERN DISTRICT OF CALIFORNIA
BY: DEPUTY

MELODY A. KRAMER, SBN 169984
KRAMER LAW OFFICE, INC.
9930 Mesa Rim Road, Suite 1600
San Diego, California 92121
Telephone (858) 362-3150
mak@kramerlawip.com

J. MICHAEL KALER, SBN 158296
KALER LAW OFFICES
9930 Mesa Rim Road, Suite 200
San Diego, California 92121
Telephone (858) 362-3151
michael@kalerlaw.com

Attorneys for Plaintiff JENS ERIK SORENSEN, as Trustee of SORENSEN RESEARCH AND DEVELOPMENT TRUST

UNITED STATES DISTRICT COURT

FOR THE SOUTHERN DISTRICT OF CALIFORNIA

'08 CV 305 BEN AJB

JENS ERIK SORENSEN, as Trustee of SORENSEN RESEARCH AND DEVELOPMENT TRUST, Plaintiff v. RALLY MANUFACTURING, INC., a Florida Corporation; and DOES 1 – 100, Defendants.	Case No. **COMPLAINT FOR PATENT INFRINGEMENT** REQUEST FOR JURY TRIAL

CR

Plaintiff JENS E. SORENSEN, as TRUSTEE OF THE SORENSEN RESEARCH AND DEVELOPMENT TRUST ("SRDT"), for its Complaint for Patent Infringement against Defendants alleges as follows:

THE PARTIES

1. SRDT is a California resident, and the trustee of a trust organized according to California law, and owner of all rights to United States Patent No. 4,935,184 (hereinafter "'184 patent"). A true and correct copy of the '184 patent is attached hereto as Exhibit A.

2. Defendant RALLY MANUFACTURING, INC. ("RALLY") is a corporation organized under the laws of Florida, having a principal office located at 5255 NW 159th Street, Miami, Florida 33014.

3. Defendants DOES 1 – 100 are other persons or entities, presently unidentified, that have also been engaged, directly or indirectly, in the manufacture, import, sale, and/or offer for sale in the United States of the products accused of infringement herein.

4. On information and belief, Defendants have acted as agents of one or more of each other during some or all of the times relative to the subject matter of this Complaint.

JURISDICTION and VENUE

5. This action arises under the Patent Laws of the United States of America, Title 35, United States Code. Jurisdiction is founded on Title 28, United States Code §§ 1331, 1332(a), and 1338(a).

6. On information and belief, venue in this district is proper under 28 U.S.C. §§ 1391 and 1400(b) because Defendants have committed acts of infringement in this District.

7. This Court has personal jurisdiction over Defendants because they have

manufactured within, imported into, offered for sale, and/or sold infringing products in this District.

CLAIM FOR RELIEF

(Patent Infringement)

8. SRDT realleges and incorporates herein by reference paragraphs 1 through 7, inclusive, as though fully set forth herein.

9. The '184 patent entitled "Stabilized Injection Molding When Using a Common Mold Part With Separate Complimentary Mold Parts," was issued on June 19, 1990.

10. On information and belief, Defendants have, within the past six years, made, imported into, sold or offered for sale within the United States and this District, products for which the two plastic component external plastic shells are manufactured through processes which incorporate all elements of the '184 patented process (hereinafter "Accused Products").

11. Accused Products include the product(s) specifically identified below, and any other of Defendants' products sold under any name which were manufactured utilizing similar processes, including but not limited to, any other product manufactured using the same injection mold as any of the products identified in the following table:

RALLY RECHARGEABLE SPOTLIGHT

12. Defendants have not obtained a license or any other valid authorization for import, sale, or offer for sale in the United States of products manufactured through use of the '184 patented process.

13. Defendants have been on constructive notice of the '184 patent since its issuance on June 19, 1990.

14. Defendants have been on actual express notice of the '184 patented process since November 1, 2005.

15. Upon information and belief, the Defendants have engaged in design, manufacture, import, sell, and/or offer for sale within the United States, including this District, products that have dual-layer external plastic housings.

16. On information and belief, the Accused products identified herein and as-yet-unidentified products manufactured through the same or substantially similar process have been manufactured through processes which incorporate all elements of the '184 patented process.

17. None of the Defendants have obtained a license or any other authorization from the Plaintiff for manufacture, import, sale, and/or offer for sale in the United States of products manufactured through use of the '184 patented process.

18. Plaintiff's initial infringement notice to Defendants on November 1, 2005, provided Defendants with a drawing and associated claim chart showing the substantial likelihood pursuant to 35 U.S.C. § 295, of the infringement of the '184 patented process by the import, sale and/or offer for sale in this District and the United States of the identified Accused Products and all other Defendants' products manufactured with processes which incorporate the elements of the '184 patent.

19. The evidence provided to Defendants in the initial letter and subsequent correspondence, illustrate how the processes utilized to produce the Accused Products incorporated each element of the '184 patent claims.

20. The initial letter requested Defendants pursuant to 35 U.S.C. § 295 to provide factual information necessary to verify the manufacturing process used to make the Accused Products.

21. To date, Defendants have not produced admissible evidence demonstrating the actual process used to manufacture the Accused Products.

22. SRDT made reasonable efforts to obtain process information for the Accused Products, providing Defendants with an opportunity to prove that it was not

using the '184 process.

23. On information and belief, Defendant made, used, imported, sold and/or offered for sale within the United States and this District, during the past six years and before February 5, 2008, the Accused Products using the '184 patent process, without authority to do so, in violation of 35 U.S.C. § 271, knowing such to be an infringement of the '184 patent, and in wanton and willful disregard of Plaintiff's '184 patent rights.

24. On information and belief, Defendants contributed to infringement of the '184 patent and actively induced others to infringe the '184 patent by virtue of making, importing, selling, using and/or offering for sale within the United States and this District, in violation of 35 U.S.C. § 271, Accused Products manufactured using the '184 patent process in wanton and willful disregard of Plaintiff's '184 patent rights.

25. On information and belief, the conduct of Defendants in willfully infringing the '184 patent, and contributing to infringement and inducing others to infringe the '184 patent, by the acts alleged hereinabove despite being on both constructive notice and actual notice, was deliberate, thus making this an exceptional case within the meaning of 35 U.S.C. § 285.

26. On information and belief, Plaintiff has suffered damages by reason of Defendants' infringing conduct alleged hereinabove. The damages for Defendants' conduct are in an amount that constitutes at least a reasonable royalty for all of Defendants' sales of the Accused Products from six years prior to filing of this Complaint and continuing until February 5, 2008.

27. On information and belief, the reasonable royalty owed to Plaintiff from Defendants is at least eight percent (8%) of gross revenues from sales of the Accused Products from six years prior to filing of this Complaint and continuing until February 5, 2008, and according to proof at trial.

28. On information and belief, the reasonable royalty owed to SRDT from

Defendants should be trebled on account of willful infringement by Defendants, and according to proof at trial.

PRAYER FOR RELIEF

WHEREFORE, SRDT prays that judgment be entered as follows:

a. For a determination that the Accused Processes are presumed to infringe the '184 patent pursuant to 35 U.S.C. § 295;

b. Defendants are adjudicated and decreed to have infringed the '184 patent;

c. Defendants are adjudicated and decreed to have contributed to the infringement of the '184 patent and to have induced others to infringe the '184 patent;

d. Defendants are ordered to account for damages adequate to compensate Plaintiff for the infringement of '184 patent, their contributory infringement of the '184 patent, and their inducement of infringement of the '184 patent, in the amount of at least eight percent (8%) of gross sales during the infringing time period as a reasonable royalty for all relevant sales of Accused Products and according to proof at trial, and such damages are awarded to Plaintiff;

e. Such damages as are awarded are trebled by the Court pursuant to 35 U.S.C. § 284 by reason of the willful, wanton, and deliberate nature of the infringement;

f. That this case is decreed an "exceptional case" and Plaintiff is awarded reasonable attorneys' fees by the Court pursuant to 35 U.S.C. § 285;

g. For interest thereon at the legal rate;

h. For costs of suit herein incurred;

i. For such other and further relief as the Court may deem just and proper.

DEMAND FOR JURY TRIAL

SRDT respectfully requests that its claims be tried to a jury.

DATED this Friday, February 15, 2008.

JENS ERIK SORENSEN, as Trustee of SORENSEN RESEARCH AND DEVELOPMENT TRUST, Plaintiff

Melody A. Kramer, Esq.
Attorney for Plaintiff

J. Michael Kaler, Esq.
Attorney for Plaintiff

EXHIBIT A

United States Patent [19]

Sorensen

[11] Patent Number: 4,935,184

[45] Date of Patent: Jun. 19, 1990

[54] STABILIZED INJECTION MOLDING WHEN USING A COMMON MOLD PART WITH SEPARATE COMPLIMENTARY MOLD PARTS

[75] Inventor: Jens O. Sorensen, Rancho Santa Fe, Calif.

[73] Assignee: Primtec, Rancho Santa Fe, Calif.

[21] Appl. No.: 386,812

[22] Filed: Jul. 27, 1989

Related U.S. Application Data

[63] Continuation of Ser. No. 152,670, Feb. 5, 1988, abandoned.

[51] Int. Cl.[5] B29C 45/16

[52] U.S. Cl. 264/246; 264/255; 264/328.8; 425/129.1

[58] Field of Search 264/245, 246, 255, 328.1, 264/328.8, 328.11, 328.12; 425/127, 129.1, 130

[56] References Cited

U.S. PATENT DOCUMENTS

3,543,338	12/1970	Cooper	264/246
3,737,272	6/1973	Segmiller	425/248
3,832,110	8/1974	Hehl	425/130
4,381,275	4/1983	Sorensen	264/328.8
4,422,995	12/1983	Schad	425/129.1
4,459,256	7/1984	Ziegler	264/242
4,508,676	4/1985	Sorensen	264/328.8

FOREIGN PATENT DOCUMENTS

17577 1/1972 Australia .

OTHER PUBLICATIONS

Promat 100-100/100, Nestal.

Primary Examiner—Jill L. Heitbrink
Attorney, Agent, or Firm—Edward W. Callan

[57] ABSTRACT

A process for injection molding plastic products having a closed end and an open end with laminated walls terminating in a rim at the open end. A first common mold part is combined with a first complementary mold part to assemble a first mold cavity in which the first plastic material is injected until it reaches the portion of the first mold cavity that defines the rim of the product. Portions of the first complementary mold part contact portions of the first common mold part to rigidly secure the mold parts in position in relation to each other in order to impede movement of the mold parts in relation to each other during injection of a first plastic material into the first mold cavity. The first plastic material is shaped such that when it is contained after solidification in a second mold cavity it provides one or more stabilizing regions that rigidly secure the first common mold part in position in relation to the second complementary mold part in order to impede movement of such mold parts in relation to each other during the injection of a second plastic material into the second mold cavity. A second plastic material having different characteristics than the first plastic material is injected until it reaches the portion of the second mold cavity that defines the rim of the product to form a laminated wall.

10 Claims, 5 Drawing Sheets

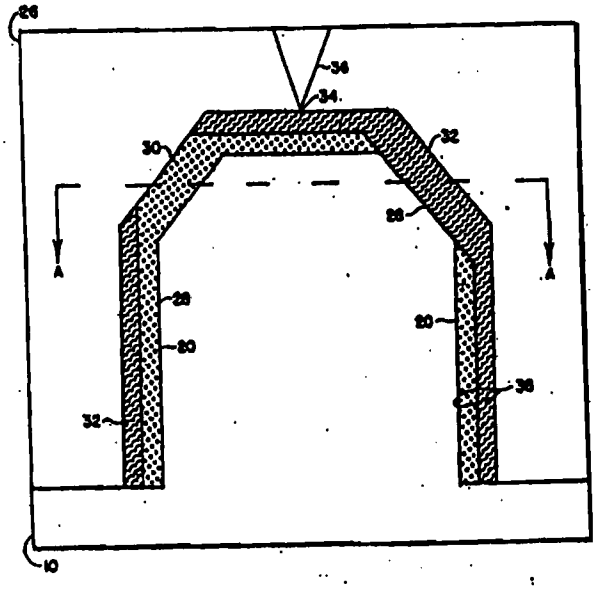

FW 002

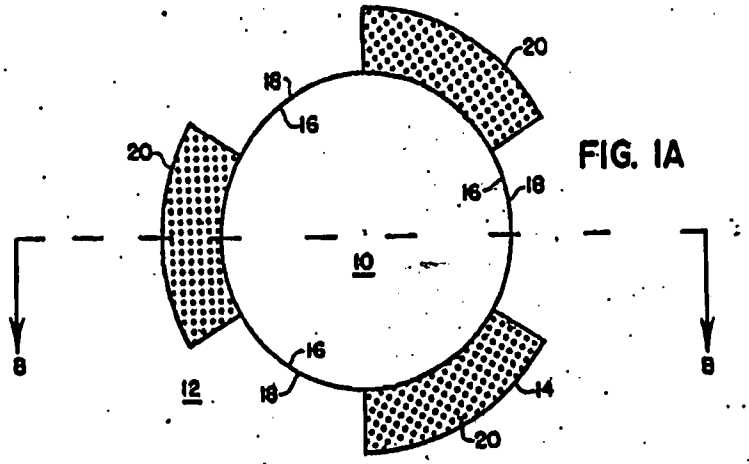

FIG. 1A

FIG. 1B

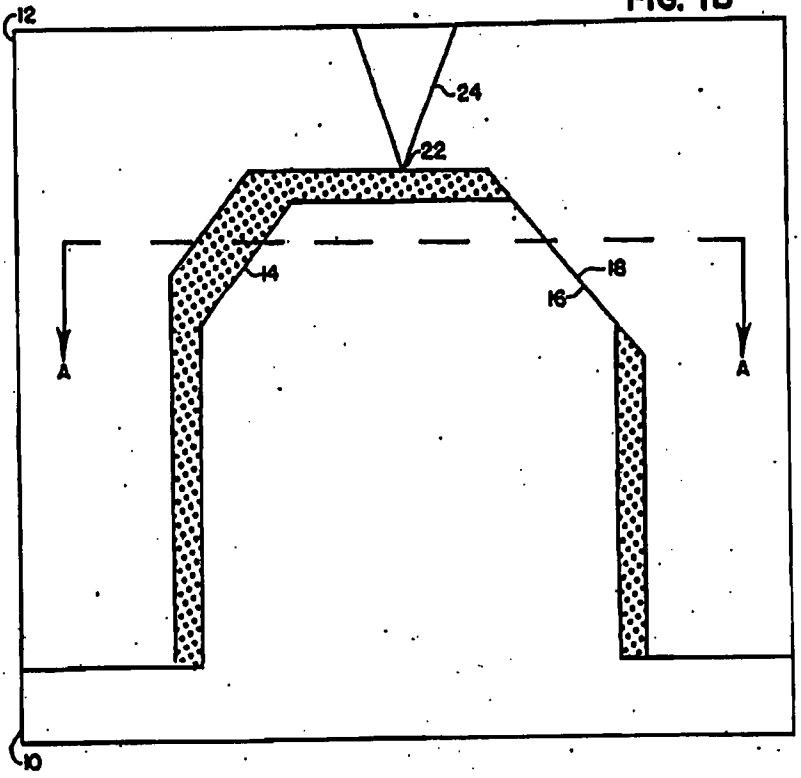

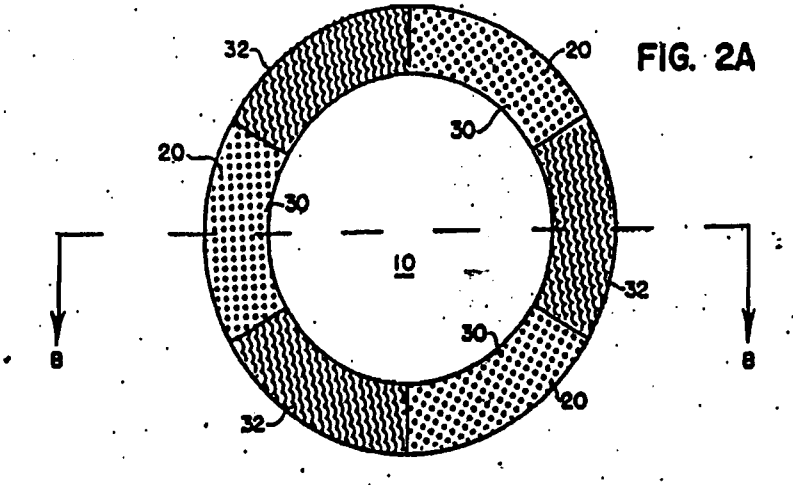

FIG. 2A

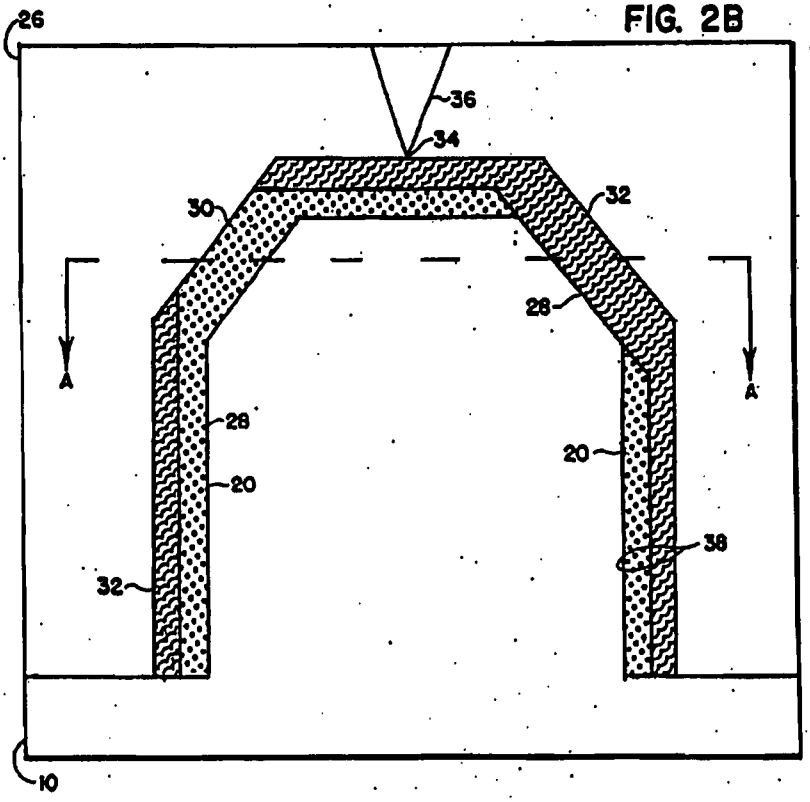

FIG. 2B

FIG. 3B

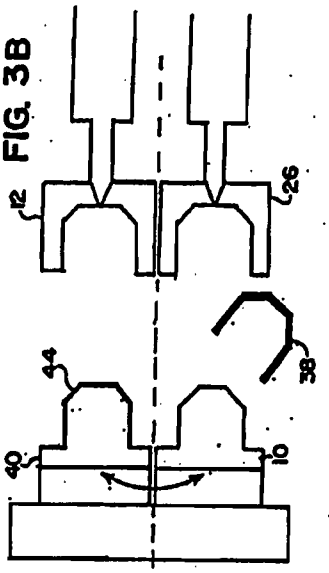

FIG. 3D

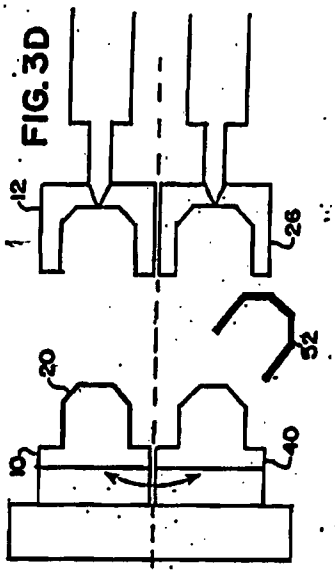

FIG. 3A

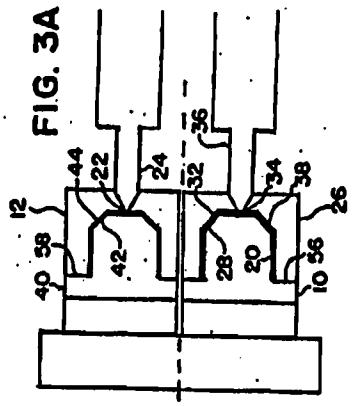

FIG. 3C

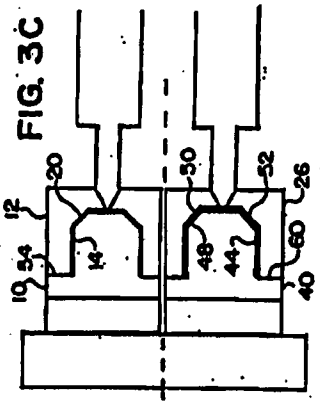

FW 005

FIG. 4

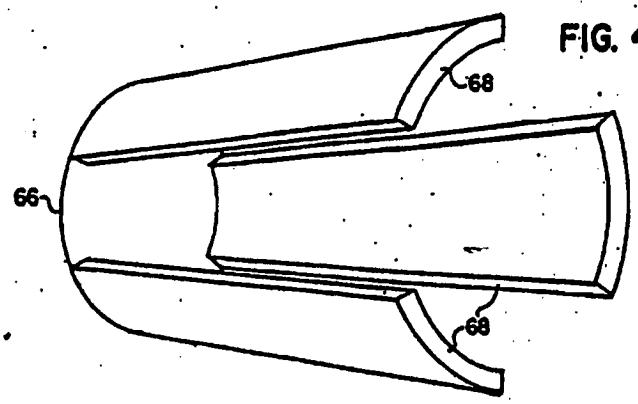

FIG. 5

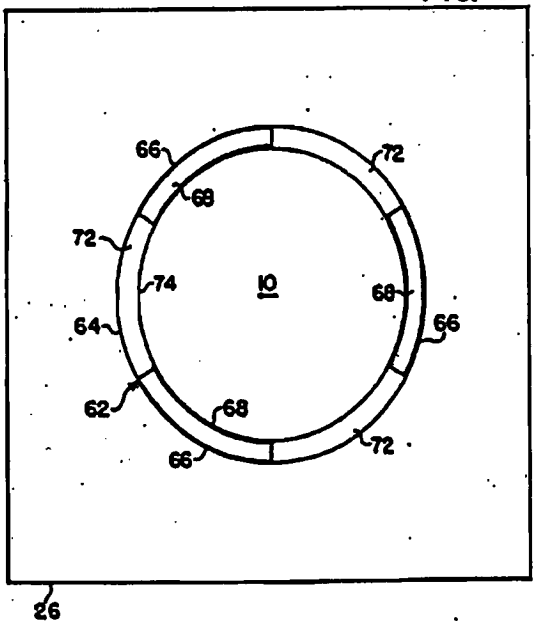

FIG. 6

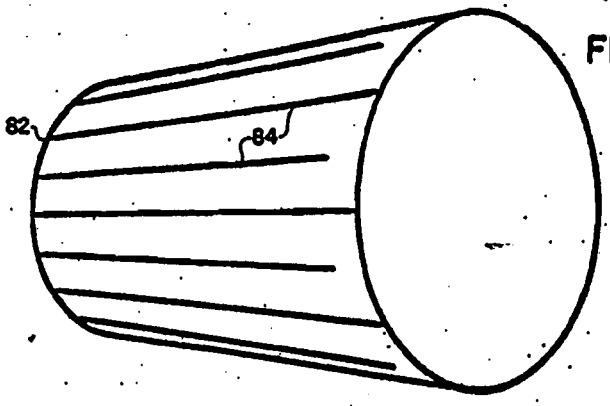

FIG. 7

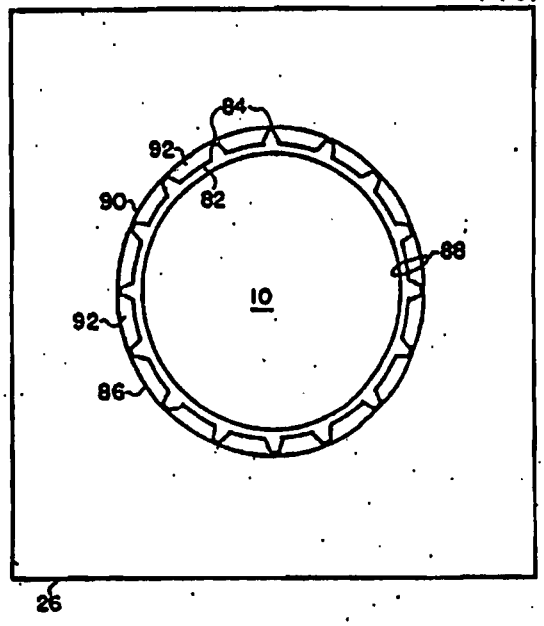

STABILIZED INJECTION MOLDING WHEN USING A COMMON MOLD PART WITH SEPARATE COMPLIMENTARY MOLD PARTS

This is a continuation of co-pending application Ser. No. 07/152,670 filed on Feb. 5, 1988 now abandoned.

BACKGROUND OF THE INVENTION

The present invention generally pertains to injection molding of plastic products and is particularly directed to stabilizing the dimensions of mold cavities during the injection steps when using a common mold part and at least two complementary mold parts to assemble separate mold cavities for receiving separate injections of plastic materials to produce a thin-walled, hollow plastic product.

The use of a common mold part with at least two complementary mold parts to provide separate mold cavities for receiving separate injections of plastic materials for producing a hollow plastic product is known. In one known prior art method of cyclic injection molding a hollow plastic product, a first mold cavity is defined by a first common mold part and a first complementary mold part; and a second mold cavity is defined by the first common mold part and a second complementary mold part. The method includes the steps of:

(a) combining the first common mold part with the first complementary mold part to assemble the first mold cavity;

(b) injecting a first plastic material into the first mold cavity;

(c) solidifying the injected first plastic material to form a first plastic material component;

(d) combining the first common mold part with the second complementary mold part to assemble the second mold cavity with the first plastic material component attached to the first common mold part so that when the second mold cavity is assembled the first plastic material component is contained within the second mold cavity;

(e) injecting a second plastic material into the second mold cavity while the first plastic material component is contained therein; and

(f) solidifying the injected second plastic material so as to form a second plastic material component that fuses with the first plastic material component to produce a hollow plastic product.

It also is known to expand upon this method by further using a third mold cavity defined by a second common mold part and the first complementary mold part, and a fourth mold cavity defined by the second common mold part and the second complementary mold part. The method further includes the steps of:

(h) during step (d), combining the second common mold part with the first complementary mold part to assemble the third mold cavity;

(i) during step (e), injecting a third plastic material into the third mold cavity;

(j) during step (f), solidifying the injected third plastic material to form a third plastic material component;

(k) during step (a), combining the second common mold part with the second complementary mold part to assemble the fourth mold cavity with the third plastic material attached to the second common mold part so that when the fourth mold cavity is assembled the third plastic material is contained within the fourth mold cavity;

(l) during step (b), injecting the fourth plastic material into the fourth mold cavity while the solidified third plastic material is contained therein; and

(m) during step (c), solidifying the injected fourth plastic material so as to form a fourth plastic material component that fuses with the third plastic material to produce a second said hollow plastic product.

This method has been used for producing hollow plastic products having composite walls of separately injected plastic materials. In performing such method, the first plastic material is injected until it reaches the parting line between the first common mold part and the first complementary mold part; the second plastic material is injected until it reaches the parting line between the first common mold part and the second complementary mold part; the third plastic material is injected until it reaches the parting line between the second common mold part and the first complementary mold part; and the fourth plastic material is injected until it reaches the parting line between the second common mold part and the second complementary mold part.

Typically, all four plastic materials are the same.

SUMMARY OF THE INVENTION

The present invention provides a method and apparatus for injecting molding hollow, thin-walled plastic products, having a closed end and an open end with laminated walls terminating in a rim at the open end, where relative movement between the common mold part and the complementary mold parts is impeded during injection of the plastic materials.

According to the present invention, the first and second plastic materials have different characteristics, and in the injection molding method described above, the step of solidifying the injected first plastic material to form the first plastic material component (step (c)) includes the step of

(g) shaping the first plastic material component such that when the first plastic material component is so contained in the second mold cavity the first plastic material component provides one or more stabilizing regions that rigidly secure the first common mold part in position in relation to the second complementary mold part in order to impede movement of the first common mold part in relation to the second complementary mold part during the injection of the second plastic material into the second mold cavity, to thereby produce a thin-walled plastic product having controlled dimension in that the wall-thickness dimensions of the second mold cavity are stabilized by the stabilizing regions.

The step of injecting the first plastic material into the first mold cavity (step (b)) includes the step of

(h) injecting the first plastic material until it reaches the portion of the first mold cavity that defines the rim of the product; and

the step of injecting the second plastic material into the second mold cavity (step (e)) includes the step of

(i) injecting the second plastic material until it reaches the portion of the second mold cavity that defines the rim of the product.

When the method of the present invention utilizes two common mold cavities, such as described above, the step of solidifying the injected third plastic material to form the third plastic material component (step (j)) includes the step of shaping the third plastic material component such that when the third plastic material

component is so contained in the fourth mold cavity the solidified third plastic material provides one or more stabilizing regions that rigidly secure the second common mold part in position in relation to the second complementary mold part in order to impede movement of the second common mold part in relation to the second complementary mold part during the injection of the fourth plastic material into the fourth mold cavity, to thereby produce a second thin-walled plastic product having controlled dimensions.

The method of the present invention may also be used for molding a product having a side wall including an approximately longitudinal strip that may be transparent to provide a transparent window in the side wall. This feature is particularly advantageous when it is desired to provide a longitudinal window in the side wall in order to monitor the level of a substance, such as a fluid, contained in the plastic product. In one embodiment, the first plastic material component is shaped to provide at least one stabilizing region that is transverse to a parting line between the first common mold part and the first complementary mold part, whereby the longitudinal strip is defined by the transverse stabilizing region. A transparent window is provided in the side wall by injecting a transparent first plastic material into the first mold cavity. A nontransparent second plastic material is injected into the second mold cavity to provide a nontransparent background for printing in the remainder of the side wall. In an alternative embodiment, the first plastic material component is shaped such that when the first plastic material component is contained in the second mold cavity, the second mold cavity defines at least one unfilled cavity region that is transverse to a parting line between the first common mold part and the second complementary mold part, whereby the longitudinal strip is defined by the unfilled transverse cavity region. In this embodiment, a transparent window is provided in the side wall by injecting a transparent second plastic material into the second mold cavity; and a nontransparent first plastic material is injected into the first mold cavity to provide a nontransparent background for printing in the remainder of the side wall.

In another aspect of the method of the present invention, the step of shaping the first plastic material component (step (g)) may further include the step of providing a first complementary mold part that is dimensioned in relation to the first common mold part such that when combined with the first common mold part to assemble the first mold cavity, portions of the first complementary mold part contact portions of the first common mold part to rigidly secure the first common mold part in position in relation to the first complementary mold part in order to impede movement of the first common mold part in relation to the first complementary mold part during the injection of the first plastic material into the first mold cavity.

The present invention further provides apparatus for performing the method of the present invention and hollow, thin-walled plastic products molded according to the method of the present invention.

Additional features of the present invention are described in relation to the description of the preferred embodiments.

BRIEF DESCRIPTION OF THE DRAWING

FIGS. 1A and 1B are sectional views illustrating a first mold cavity assembled by combining a first common mold part with a first complementary mold part. FIG. 1A is a top sectional view taken along lines A—A in FIG. 1B; and FIG. 1B is a side sectional view taken along lines B—B in FIG. 1A. FIGS. 1A and 1B further show the first plastic material injected into the first mold cavity.

FIGS. 2A and 2B are sectional views illustrating a second mold cavity assembled by combining the first common mold part of FIGS. 1A and 1B with a second complementary mold part. FIG. 2A is a top sectional view taken along lines A—A in FIG. 2B; and FIG. 2B is a side sectional view taken along lines B—B in FIG. 2A. FIGS. 2A and 2B further show the first plastic material component contained in the second mold cavity and the second plastic material injected into the second mold cavity.

FIGS. 3A through 3D illustrate a series of steps in the performance of a preferred embodiment of the method of the present invention.

FIG. 4 illustrates a first plastic material component formed in an alternative embodiment of the method of the present invention.

FIG. 5 is a sectional view illustrating a second mold cavity containing the first plastic material component of FIG. 4. FIG. 5 also is a sectional view illustrating a product molded according to such alternative embodiment of the method of the present invention.

FIG. 6 illustrates a first plastic material component formed in a further alternative embodiment of the method of the present invention.

FIG. 7 is a sectional view illustrating a second mold cavity containing the first plastic material component of FIG. 6. FIG. 7 also provides a sectional view of a product molded according to such further alternative embodiment of the method of the present invention.

DESCRIPTION OF THE PREFERRED EMBODIMENTS

Referring to FIGS. 1A and 1B the apparatus of a preferred embodiment of the present invention includes a first common mold part 10 and first complementary mold part 12. The first common mold part 10 is combined with the first complementary mold part 12 to assemble a first mold cavity 14. The first complementary mold part 12 is dimensioned in relation to the first common mold part 10 such that when so combined with the first common mold part 10 to assemble the first mold cavity 14, portions 16 of the first complementary mold part 12 contact portions 18 of the first common mold part 10 to rigidly secure the first common mold part 10 in position in relation to the first complementary mold part 12 in order to impede movement of the first common mold part 10 in relation to the first complementary mold part 12 during injection of the first plastic material 20 into the first mold cavity 14. The first plastic material 20 is injected into the mold cavity 14 through a gate 22 and a runner 24 in the first complementary mold part 12.

The injected first plastic material 20 is solidified to form a first plastic material component 20 by cooling the injected first plastic material in the first mold cavity 14, whereby the first plastic material component 20 is shaped in accordance with the dimensions of the first mold cavity 14. In an alternative embodiment, the first plastic material component may be further shaped following removal of the first complementary mold part 12.

Referring to FIGS. 2A and 2B the apparatus of a preferred embodiment of the present invention includes a second complementary mold part 26. The first common mold part 10 is combined with the second complementary mold part 26 to assemble a second mold cavity 28 with the first plastic material component 20 attached to the first common mold part 10, so that when the second mold cavity 28 is assembled, the first plastic material component 20 is contained within the second mold cavity 28.

The first plastic material component 20 is shaped such that when the first plastic material component 20 is so contained in the second mold cavity 28 the first plastic material component 20 provides one or more stabilizing regions 30 that rigidly secure the first common mold part 10 in position in relation to the second complementary mold part 26 in order to impede movement of the first common mold part 10 in relation to the second complementary mold part 26 during the insertion of a second plastic material 32 into the second mold cavity 28.

The second plastic material 32 is injected into the second mold cavity 28 through a gate 34 and a runner 36 in the second complementary mold part 26 while the first plastic material component 20 is contained in the second mold cavity 28.

The injected second plastic material 32 is solidified by cooling in the second mold cavity 28 so as to form a second plastic material component 32 that fuses with the first plastic material component 20 to produce thin-walled hollow plastic product 38 having controlled dimensions.

A preferred embodiment of a method of cyclic injection molding of hollow, thin-walled plastic products according to the present invention, utilizing two common mold parts and two complementary mold parts to provide four mold cavities is described with reference to FIGS. 3A through 3D.

Referring to FIG. 3A, a second common mold part 40 is combined with the first complementary mold part 12 to assemble a third mold cavity 42; while at the same time the first common mold part 10 is combined with the second complementary mold part 26 to assemble a second mold cavity 28, with the first plastic material component 18 attached to the first common mold part 10, so that when the second mold cavity 28 is assembled, the first plastic material component 20 is contained within the second mold cavity 28. The formation of the first plastic material component 20 is discussed above in relation to FIGS. 1A and 1B.

A third plastic material 44, which may be the same as the first plastic material 20, is injected into the third mold cavity 42 through the gate 22 and the runner system 24 contained in the first complementary mold part 12; while at the same time, the second plastic material 32 is injected into the second mold cavity 28 through the gate 34 and a runner system 36 contained in the second complementary mold part 26.

The injected third plastic material 44 is solidified by cooling in the third mold cavity 42 to form a third plastic material component 44; while at the same time the injected second plastic material 32 is solidified by cooling in the second mold cavity 28 so as to form the second plastic material component 28 that fuses with the first plastic material component 20 to produce the hollow, thin-walled plastic product 38.

Referring to FIG. 3B, the first common mold part 10 and the second common mold part 40 are separated from the second complementary mold part 26 and the first complementary mold part 12 respectively; and the molded hollow, thin-walled plastic product 38 is ejected from first common mold part 10, while the third plastic material component 44 is retained on the third common mold part 40. The positions of the first common mold part 10 and the second common mold part 40 are then interchanged from those shown in FIG. 3B to those shown in FIG. 3C.

Referring to FIG. 3C, the first common mold part 10 is combined with the first complementary mold part 12 to assemble the first mold cavity 14; while at the same time the second common mold part 40 is combined with the second complementary mold part 26 to assemble a fourth mold cavity 48, with the first plastic material component 44 attached to the third common mold part 40, so that when the fourth mold cavity 48 is assembled, the third plastic material component 44 is contained within the fourth mold cavity 48. The formation of the third plastic material component 44 is discussed above in relation to FIG. 3A.

The first plastic material 20, which may be the same as the third plastic material 44, is injected into the first mold cavity 14 through the gate 22 and the runner system 24 contained in the first complementary mold part 12; while at the same time, a fourth plastic material 50, which may be identical to the second plastic material 32, is injected into the fourth mold cavity 48 through the gate 34 and a runner system 36 contained in the second complementary mold part 26.

The injected first plastic material 20 is solidified by cooling in the first mold cavity 14 to form another first plastic material component 20; while at the same time the injected fourth plastic material 50 is solidified by cooling in the fourth mold cavity 48 so as to form the second plastic material component 48 that fuses with the third plastic material component 44 to produce a second hollow, thin-walled plastic product 52.

Referring to FIG. 3D, the first common mold part 10 and the second common mold part 40 are separated from the first complementary mold part 12 and the second complementary mold part 26 respectively; and the second molded hollow, thin-walled plastic product 52 is ejected from second common mold part 40, while the first plastic material component 20 is retained on the first common mold part 10. The positions of the first common mold part 10 and the second common mold part 40 are then interchanged from those shown in FIG. 3D to those shown in FIG. 3A, and the cycle is repeated.

As described above, the first plastic material component 20 is shaped such that when the first plastic material component 20 is contained in the second mold cavity 28, the first plastic material component 20 provides one or more stabilizing regions 30 that rigidly secure the first common mold part 20 in position in relation to the second complementary mold part 26 in order to impede movement of the first common mold part 10 in relation to the second complementary mold part 26 during injection of the second plastic material 32 into the second mold cavity 28.

Likewise, the third plastic material component 44 is shaped such that when the third plastic material component 44 is contained in the fourth mold cavity 48, the third plastic material component 44 provides one or more stabilizing regions that rigidly secure the second common mold part 40 in position in relation to the second complementary mold part 26 in order to impede

movement of the second common mold part 40 in relation to the second complementary mold part 26 during injection of the fourth plastic material 50 into the fourth mold cavity 48.

The method described above with reference to FIGS. 3A through 3D may be used for producing hollow, thin-walled plastic products having laminated walls of different plastic materials. In performing such method, the first plastic material 20 is injected until it reaches a parting line 54 between the first common mold part 10 and the first complementary mold part 12 (FIG. 3C); and the second plastic material 32 is injected until it reaches a parting line 56 between the first common mold part 10 and the second complementary mold part 26 (FIG. 3A). Likewise, the third plastic material 44 is injected until it reaches a parting line 58 between the second common mold part 40 and the first complementary mold part (FIG. 3A); and the fourth plastic material 50 is injected until it reaches a parting line 60 between the second common mold part 40 and the second complementary mold part 26.

Referring to FIGS. 4 and 5, the method of the present invention also may be used for molding a product 62 having a side wall 64 including at least one approximately longitudinal strip that may be transparent to thereby provide a transparent window in the side wall 64.

In one embodiment, the first plastic material component 66 is shaped to provide at least one stabilizing region 68 that is transverse to a parting line 54 (FIG. 3C) between the first common mold part 10 and the first complementary mold part 12, whereby each longitudinal strip is defined by a transverse stabilizing region 68. The stabilizing regions 68 need not extend all the way to the parting line 54. A transparent window is provided in the side wall 64 by injecting a transparent first plastic material into the first mold cavity to provide the first plastic material component 66. A nontransparent second plastic material 72 is injected into the second mold cavity 74 to provide a nontransparent background for printing in the remainder of the side wall 64.

In an alternative embodiment, the first plastic material component 66 is shaped such that when the first plastic material component 66 is contained in the second mold cavity 74, the second mold cavity 74 defines at least one unfilled cavity region 72 that is transverse to a parting line 56 (FIG. 3A) between the first common mold part 10 and the second complementary mold part 26, whereby longitudinal strips may be provided in the unfilled transverse cavity regions 72. The unfilled transverse cavity regions 72 need not extend all the way to the parting line 56. In this embodiment, transparent windows are defined in the side wall 64 by injecting a transparent second plastic material into the second mold cavity 74 to fill the transverse cavity regions 72. Prior thereto, a nontransparent first plastic material is injected into the first mold cavity to form the first plastic material component 66 and thereby provide a nontransparent background for printing in the remainder of the side wall 64.

Referring to FIGS. 6 and 7, in a further preferred embodiment, the first plastic material component 82 that is shaped as shown in FIG. 6 to include a plurality of symmetrically disposed stabilizing regions 84, which extend approximately longitudinally over a portion of the side wall 86 of the molded product 88. The first plastic material component 82 is molded in a first mold cavity in accordance with the teaching of applicant's U.S. Pat. application No. 7,463, filed Jan. 26, 1987 and in accordance of the above description to the extent that such description is compatible with the teaching of application Ser. No. 7,463. After the first plastic material component 82 is formed in a first mold cavity, which is assembled by combining a first complementary mold part 12 and a first common mold part 10, the first plastic component 82 is retained on the first common mold part 10 while the first common mold part 10 is combined with a second complementary mold part 26 to assemble a second mold cavity 90, as shown in FIG. 7.

Referring to FIG. 7, the first plastic material component 82 is shaped such that when the first plastic material component 82 is contained in the second mold cavity 90, the first plastic material component 82 provides one or more stabilizing regions 84 that rigidly secure the first common mold part 10 in position in relation to the second complementary mold part 26 in order to impede movement of the first common mold part 10 in relation to the second complementary mold part 26 during injection of the second plastic material 92 into the second mold cavity 90.

The injected second plastic material 92 is solidified by cooling in the second mold cavity 90 to form a second plastic material component 92 that fuses with the first plastic material component 82 to produce the hollow, thin-walled, plastic product 88. The side wall 86 of the molded product 88 thus includes two layers of plastic 82, 92. The molded product 88 has controlled dimensions, is generally shaped as shown in FIG. 6, and has a lateral cross section as shown in FIG. 7. The side wall 86 of the molded product thus includes two layers of plastic 82, 92.

The stabilizing regions 84 have a wall thickness equal to the thickness of the side wall 86 and are transverse to the parting line 56 (FIG. 3A) between the first common mold part 10 and the second complementary mold part 26 to thereby provide longitudinal transparent windows 84 in the side wall 86. The stabilizing regions 84 need not extend all the way to the parting line 56. In a preferred embodiment of this product, the other side-wall layer 90 is nontransparent and extends throughout the majority of the side wall 86.

The present invention may be modified from the embodiments illustrated and described above. The common mold parts may be cavity mold parts instead of core mold parts, as illustrated and described herein. In addition, injections of plastic material into any given mold cavity may be made through more than one gate. Also, injections of plastic materials may be made into more than two mold cavities simultaneously, whereby the number of mold cavities included in the mold may be a multiple of the number of separate mold cavities required to produce a single product. For example, when using the method described and illustrated herein for producing a product composed of two plastic material components formed following injection of plastic material into two separate mold cavities, the number of mold cavities included in the mold may be any multiple of two, i.e. 2, 4, 6, etc.

The present invention also can be used to mold products including more than two plastic material components formed following injection of plastic material into more than two separate mold cavities. In an embodiment requiring three separate mold cavities, a third complementary mold part is used, and the fused first and second plastic material components are retained on

the first common mold part when the first common mold part is combined with the third complementary mold part to assemble the third mold cavity, with the fused first and second mold parts being shaped to stabilize the common mold in relation to the third complementary mold part during injection of a third plastic material into the third mold cavity.

The core-stabilization techniques described in applicant's U.S. Pat. Nos. 4,381,275 and 4,508,676; U.S. Pat. No. 3,737,272 to Stegmuller; and in Australian Patent Specification 17,577/70 filed by Ryles and published Jan. 20, 1972 may be used to stabilize the common mold part in relation to the first complementary mold part during the injection of the first plastic material in lieu of the technique described above with relation to FIGS. 1A and 1B.

The first and second plastic materials may be either the same material or different materials. It is sometimes advantageous to use first and second plastic materials having different physical characteristics. For example, the present invention is ideally suited for molding a hollow, thin-walled plastic product in which the side wall must provide both a moisture barrier and a gas (such as Oxygen) barrier. To mold such a product, a plastic material having a desirable moisture-barrier characteristic is selected as one of the injected plastic materials; and a plastic material having a desirable gas-barrier characteristic is selected as the other injected plastic material.

I claim:

1. A method of cyclic injection molding a thin-walled hollow, plastic product having a closed end and an open end with laminated walls terminating in a rim at the open end, utilizing a first mold cavity and a second mold cavity, the first mold cavity being defined by a first common mold part and a first complementary mold part, and the second mold cavity being defined by the first common mold part and a second complementary mold part, the method comprising the steps of

(a) combining the first common mold part with the first complementary mold part to assemble the first mold cavity;

(b) injecting a first plastic material into the first mold cavity;

(c) solidifying the injected first plastic material to form a first plastic material component;

(d) combining the first common mold part with the second complementary mold part to assemble the second mold cavity with the first plastic material component attached to the first common mold part so that when the second mold cavity is assembled the first plastic material component is contained within the second mold cavity;

(e) injecting a second plastic material having different characteristics than the first plastic material into the second mold cavity while the first plastic material component is contained therein; and

(f) solidifying the injected second plastic material so as to form a second plastic material component that fuses with the first plastic material component to produce a hollow plastic product;

wherein step (c) comprises the step of

(g) shaping the first plastic material component such that when the first plastic material component is so contained in the second mold cavity the first plastic material component provides one or more stabilizing regions that rigidly secure the first common mold part in position in relation to the second complementary mold part in order to impede movement of the first common mold part in relation to the second complementary mold part during step (e), to thereby produce a thin-walled plastic product having controlled dimensions;

wherein step (b) comprises the step of

(h) injecting the first plastic material until it reaches the portion of the first mold cavity that defines the rim of the product; and

wherein step (e) comprises the step of

(i) injecting the second plastic material until it reaches the portion of the second mold cavity that defines the rim of the product.

2. A method according to claim 1 for molding a product having a side wall including an approximately longitudinal strip, wherein step (g) comprises shaping the first plastic material component to provide at least one said stabilizing region that is transverse to a parting line between the first common mold part and the first complementary mold part, whereby said longitudinal strip is defined by said transverse stabilizing region.

3. A method according to claim 2,

wherein step (b) comprises injecting a said first plastic material that is transparent, whereby said strip defines a transparent window in the side wall; and

wherein step (e) comprises injecting a said second plastic material that is nontransparent.

4. A method according to claim 1 for molding a product having a side wall including an approximately longitudinal strip, wherein step (g) comprises shaping the first plastic material component such that when the first plastic material component is contained in the second mold cavity, the second mold cavity defines at least one unfilled cavity region that is transverse to a parting line between the first common mold part and the second complementary mold part, whereby said longitudinal strip is defined by said unfilled transverse cavity region.

5. A method according to claim 4,

wherein step (b) comprises injecting a said first plastic material that is nontransparent; and

wherein step (e) comprises injecting a said second plastic material that is transparent, whereby said strip defines a transparent window in the side wall.

6. A method according to claim 1, for cyclic injection molding a plurality of thin-walled, hollow, plastic products, further utilizing a third mold cavity and a fourth mold cavity, the third mold cavity being defined by a second common mold part and the first complementary mold part, and the fourth mold cavity being defined by the second common mold part and the second complementary mold part, the method further comprising the steps of:

(h) during step (d), combining the second common mold part with the first complementary mold part to assemble the third mold cavity;

(i) during step (e), injecting a third plastic material into the third mold cavity;

(j) during step (f), solidifying the injected third plastic material to form a third plastic material component;

(k) during step (a), combining the second common mold part with the second complementary mold part to assemble the fourth mold cavity with the third plastic material attached to the second common mold part so that when the fourth mold cavity is assembled the third plastic material is contained within the fourth mold cavity;

(l) during step (b), injecting the fourth plastic material into the fourth mold cavity while the solidified third plastic material is contained therein; and

(m) during step (c), solidifying the injected fourth plastic material so as to form a fourth plastic material component that fuses with the third plastic material to produce a second hollow plastic product;

wherein step (j) comprises the step of

(n) shaping the third plastic material component such that when the third plastic material component is so contained in the fourth mold cavity the third plastic material component provides one or more stabilizing regions that rigidly secure the second common mold part in position in relation to the second complementary mold part in order to impede movement of the second common mold part in relation to the second complementary mold part during step (l), to thereby produce a second thin-walled plastic product having controlled dimensions.

7. A method according to claim 6, for producing said products having laminated walls,

wherein step (b) comprises the step of

(o) injecting the first plastic material until it reaches the parting line between the first common mold part and the first complementary mold part;

wherein step (e) comprises the step of

(p) injecting the second plastic material until it reaches the parting line between the first common mold part and the second complementary mold part;

wherein step (i) comprises the step of

(q) injecting the third plastic material until it reaches the parting line between the second common mold part and the first complementary mold part; and

wherein step (l) comprises the step of

(r) injecting the fourth plastic material until it reaches the parting line between the second common mold part and the second complementary mold part.

8. A method according to claim 6, wherein the first plastic material is the same as the third plastic material and the second plastic material is the same as the fourth plastic material.

9. A method according to claim 1, wherein step (g) further comprises providing a said first complementary mold part that is dimensioned in relation to the first common mold part such that when so combined with the first common mold part to assemble the first mold cavity, portions of the first complementary mold part contact portions of the first common mold part to rigidly secure the first common mold part in position in relation to the first complementary mold part in order to impede movement of the first common mold part in relation to the first complementary mold part during step (b).

10. A method according to claim 1, further comprising the step of

(j) between steps (c) and (d), separating said first common mold part with the first plastic material component attached thereto from said first complementary mold part without dividing that portion of said first complementary mold part that defines the rim of the product.

* * * * *

UNITED STATES
DISTRICT COURT
SOUTHERN DISTRICT OF CALIFORNIA
SAN DIEGO DIVISION

 # 147723 - BH

February 15, 2008
15:17:21

Civ Fil Non-Pris
USAO #.: 08CV0305 CIVIL FILING
Judge..: ROGER T BENITEZ
Amount.: $350.00 CK
Check#.: BC# 1280

Total-> $350.00

FROM: SORENSEN V. RALLY MFG.
CIVIL FILING

ORIGINAL

JS 44 (Rev. 12/07)

CIVIL COVER SHEET

The JS 44 civil cover sheet and the information contained herein neither replace nor supplement the filing and service of pleadings or other papers as required by law, except as provided by local rules of court. This form, approved by the Judicial Conference of the United States in September 1974, is required for the use of the Clerk of Court for the purpose of initiating the civil docket sheet. (SEE INSTRUCTIONS ON THE REVERSE OF THE FORM.)

'08 CV 305 BEN AJB

08 FEB 15 PM 3:12

I. (a) PLAINTIFFS

JENS ERIK SORENSEN, as Trustee of SORENSEN RESEARCH AND DEVELOPMENT TRUST

(b) County of Residence of First Listed Plaintiff San Diego, California
(EXCEPT IN U.S. PLAINTIFF CASES)

(c) Attorney's (Firm Name, Address and Telephone Number)

J. Michael Kaler, Kaler Law Office, 9930 Mesa Rim Rd., #200, San Diego, CA 92121 (858)362-3151

Melody A. Kramer, Kramer Law Office, Inc., 9930 Mesa Rim Rd., #1600, San Diego, CA 92121 (858)362-3150

DEFENDANTS

RALLY MANUFACTURING, INC., a Florida Corporation; and DOES 1 – 100

County of Residence of First Listed Defendant Miami-Dade, Florida
(IN U.S. PLAINTIFF CASES ONLY)

NOTE: IN LAND CONDEMNATION CASES, USE THE LOCATION OF THE LAND INVOLVED.

Attorneys (If Known)

CLERK, U.S. DISTRICT COURT
SOUTHERN DISTRICT OF CALIFORNIA
BY: DEPUTY

II. BASIS OF JURISDICTION (Place an "X" in One Box Only)

- ☐ 1 U.S. Government Plaintiff
- ☑ 3 Federal Question (U.S. Government Not a Party)
- ☐ 2 U.S. Government Defendant
- ☐ 4 Diversity (Indicate Citizenship of Parties in Item III)

III. CITIZENSHIP OF PRINCIPAL PARTIES (Place an "X" in One Box for Plaintiff and One Box for Defendant)

(For Diversity Cases Only)

	PTF	DEF		PTF	DEF
Citizen of This State	☐ 1	☐ 1	Incorporated or Principal Place of Business In This State	☐ 4	☐ 4
Citizen of Another State	☐ 2	☐ 2	Incorporated *and* Principal Place of Business in Another State	☐ 5	☐ 5
Citizen or Subject of a Foreign Country	☐ 3	☐ 3	Foreign Nation	☐ 6	☐ 6

IV. NATURE OF SUIT (Place an "X" in One Box Only)

CONTRACT
- ☐ 110 Insurance
- ☐ 120 Marine
- ☐ 130 Miller Act
- ☐ 140 Negotiable Instrument
- ☐ 150 Recovery of Overpayment & Enforcement of Judgment
- ☐ 151 Medicare Act
- ☐ 152 Recovery of Defaulted Student Loans (Excl. Veterans)
- ☐ 153 Recovery of Overpayment of Veteran's Benefits
- ☐ 160 Stockholders' Suits
- ☐ 190 Other Contract
- ☐ 195 Contract Product Liability
- ☐ 196 Franchise

REAL PROPERTY
- ☐ 210 Land Condemnation
- ☐ 220 Foreclosure
- ☐ 230 Rent Lease & Ejectment
- ☐ 240 Torts to Land
- ☐ 245 Tort Product Liability
- ☐ 290 All Other Real Property

TORTS

PERSONAL INJURY
- ☐ 310 Airplane
- ☐ 315 Airplane Product Liability
- ☐ 320 Assault, Libel & Slander
- ☐ 330 Federal Employers' Liability
- ☐ 340 Marine
- ☐ 345 Marine Product Liability
- ☐ 350 Motor Vehicle
- ☐ 355 Motor Vehicle Product Liability
- ☐ 360 Other Personal Injury

PERSONAL INJURY
- ☐ 362 Personal Injury - Med. Malpractice
- ☐ 365 Personal Injury - Product Liability
- ☐ 368 Asbestos Personal Injury Product Liability

PERSONAL PROPERTY
- ☐ 370 Other Fraud
- ☐ 371 Truth in Lending
- ☐ 380 Other Personal Property Damage
- ☐ 385 Property Damage Product Liability

CIVIL RIGHTS
- ☐ 441 Voting
- ☐ 442 Employment
- ☐ 443 Housing/ Accommodations
- ☐ 444 Welfare
- ☐ 445 Amer. w/Disabilities - Employment
- ☐ 446 Amer. w/Disabilities - Other
- ☐ 440 Other Civil Rights

PRISONER PETITIONS
- ☐ 510 Motions to Vacate Sentence

HABEAS CORPUS:
- ☐ 530 General
- ☐ 535 Death Penalty
- ☐ 540 Mandamus & Other
- ☐ 550 Civil Rights
- ☐ 555 Prison Condition

FORFEITURE/PENALTY
- ☐ 610 Agriculture
- ☐ 620 Other Food & Drug
- ☐ 625 Drug Related Seizure of Property 21 USC 881
- ☐ 630 Liquor Laws
- ☐ 640 R. R. & Truck
- ☐ 650 Airline Regs.
- ☐ 660 Occupational Safety/Health
- ☐ 690 Other

LABOR
- ☐ 710 Fair Labor Standards Act
- ☐ 720 Labor/Mgmt. Relations
- ☐ 730 Labor/Mgmt. Reporting & Disclosure Act
- ☐ 740 Railway Labor Act
- ☐ 790 Other Labor Litigation
- ☐ 791 Empl. Ret. Inc. Security Act

IMMIGRATION
- ☐ 462 Naturalization Application
- ☐ 463 Habeas Corpus - Alien Detainee
- ☐ 465 Other Immigration Actions

BANKRUPTCY
- ☐ 422 Appeal 28 USC 158
- ☐ 423 Withdrawal 28 USC 157

PROPERTY RIGHTS
- ☐ 820 Copyrights
- ☑ 830 Patent
- ☐ 840 Trademark

SOCIAL SECURITY
- ☐ 861 HIA (1395ff)
- ☐ 862 Black Lung (923)
- ☐ 863 DIWC/DIWW (405(g))
- ☐ 864 SSID Title XVI
- ☐ 865 RSI (405(g))

FEDERAL TAX SUITS
- ☐ 870 Taxes (U.S. Plaintiff or Defendant)
- ☐ 871 IRS -Third Party 26 USC 7609

OTHER STATUTES
- ☐ 400 State Reapportionment
- ☐ 410 Antitrust
- ☐ 430 Banks and Banking
- ☐ 450 Commerce
- ☐ 460 Deportation
- ☐ 470 Racketeer Influenced and Corrupt Organizations
- ☐ 480 Consumer Credit
- ☐ 490 Cable/Sat TV
- ☐ 810 Selective Service
- ☐ 850 Securities/Commodities/ Exchange
- ☐ 875 Customer Challenge 12 USC 3410
- ☐ 890 Other Statutory Actions
- ☐ 891 Agricultural Acts
- ☐ 892 Economic Stabilization Act
- ☐ 893 Environmental Matters
- ☐ 894 Energy Allocation Act
- ☐ 895 Freedom of Information Act
- ☐ 900 Appeal of Fee Determination Under Equal Access to Justice
- ☐ 950 Constitutionality of State Statutes

V. ORIGIN (Place an "X" in One Box Only)

☑ 1 Original Proceeding ☐ 2 Removed from State Court ☐ 3 Remanded from Appellate Court ☐ 4 Reinstated or Reopened ☐ 5 Transferred from another district (specify) ☐ 6 Multidistrict Litigation ☐ 7 Appeal to District Judge from Magistrate Judgment

VI. CAUSE OF ACTION

Cite the U.S. Civil Statute under which you are filing (Do not cite jurisdictional statutes unless diversity):
Title 35 USC 271

Brief description of cause:
Patent Infringement

VII. REQUESTED IN COMPLAINT:

☐ CHECK IF THIS IS A CLASS ACTION UNDER F.R.C.P. 23

DEMAND $ According to Proof

CHECK YES only if demanded in complaint:
JURY DEMAND: ☑ Yes ☐ No

VIII. RELATED CASE(S) IF ANY

(See instructions): JUDGE (see Notice of Related Cases) DOCKET NUMBER

DATE 02/15/2008

SIGNATURE OF ATTORNEY OF RECORD

FOR OFFICE USE ONLY
RECEIPT # 147723 AMOUNT $350 2/15/08 BH APPLYING IFP JUDGE MAG. JUDGE

American LegalNet, Inc. www.FormsWorkflow.com

CR