DANIEL JOHNSON, JR. (SBN 57409)
RITA E. TAUTKUS (SBN 162090)
MORGAN, LEWIS & BOCKIUS LLP
One Market, Spear Street Tower
San Francisco, CA 94105-1126
Telephone: 415.442.1000
Facsimile: 415.442.1001
djjohnson@morganlewis.com
rtautkus@morganlewis.com

MARK W. TAYLOR (*pro hac vice*)
BRADFORD A. CANGRO (*pro hac vice*)
DAE GUNN JEI (*pro hac vice*)
MORGAN, LEWIS & BOCKIUS LLP
1111 Pennsylvania Avenue NW
Washington, DC 20004
Telephone: 202.739.3000
Facsimile: 202.739.3001
mark.taylor@morganlewis.com
bcangro@morganlewis.com
djei@morganlewis.com

Attorneys for Plaintiff
FUJIFILM CORPORATION

UNITED STATES DISTRICT COURT

NORTHERN DISTRICT OF CALIFORNIA

SAN FRANCISCO DIVISION

Fujifilm Corporation,

Plaintiff,

vs.

Motorola Mobility LLC,

Defendant.

Case No. 3:12-cv-03587-WHO

PLAINTIFF FUJIFILM CORPORATION'S OPENING CLAIM CONSTRUCTION BRIEF

Date: September 25, 2013
Time: 10:00 a.m.
Location: Courtroom 2, 17th Floor
Judge: The Honorable William H. Orrick

TABLE OF CONTENTS

Page

I. SUMMARY OF THE ARGUMENT 1

II. ARGUMENT 1

A. U.S. Patent No. 5,734,427 1

1. Description of the Preferred Embodiment 1

2. Disputed Terms and Their Proper Constructions 2

a. "Thinning" Limitations (claims 1, 6, 11, 14, 15 and 19) 2

b. "a viewfinder … implemented by a video monitor" (claims 1, 6, 14, and 15) 5

c. "imaging device for shooting a subject and outputting (a) corresponding (first color image signal having a high resolution/high resolution pixel data) to be recorded in a recording medium" (claims 1, 6, 14, and 15) 6

B. U.S. Patent No. 6,144,763 9

1. Description of the Preferred Embodiment 9

2. Disputed Terms and Their Proper Constructions 10

a. "writing processed image data output from a signal processing circuit in a storage, and reading the processed image data out of said storage in preselected blocks component by component" (claim 12) and "storage for storing the processed image data and allowing the processed image data to be read out in preselected blocks component by component" (claims 1 and 19) 10

C. U.S. Patent No. 6,915,119 11

1. Description of the Preferred Embodiment 11

2. Disputed Term and Its Proper Construction 12

a. "menu (comprises/includes) selections for [a], …, [y], and [z]" (claims 1, 7, 12, 19, 32, and 38) 12

D. U.S. Patent No. 7,327,886 15

1. Description of the Preferred Embodiment 15

2. Disputed Terms and Their Proper Constructions 16

a. "face judgment means for performing processing, in a predetermined time interval, for judging whether a human face is included in a frame in the moving image until a positive result is obtained in the judgment" (claim 1) 16

TABLE OF CONTENTS

Page

b. "face detection means for detecting a facial position in a frame, which is judged to include a face, if the face judgment means judges that the face is included in the frame" (claim 1) 20

c. "detecting a facial position in a frame, which is judged to include a face, if it is judged that the face is included in the frame" (claims 1 and 11) 22

E. U.S. Patent No. 8,306,285 23

1. Description of the Preferred Embodiment 23

2. Disputed Term and Its Proper Construction 23

a. "face judgment device for performing processing, at predetermined or varying time intervals, for judging whether a human face is included in a frame" (claims 1 and 13) 23

III. CONCLUSION 25

TABLE OF AUTHORITIES

Page(s)

CASES

AllVoice Computing PLC v. Nuance Commc'ns, Inc.,
504 F.3d 1236 (Fed. Cir. 2007) 16, 21

Aspex Eyewear, Inc. v. Marchon Eyewear, Inc.,
672 F.3d 1335 (Fed. Cir. 2012) 3

Asyst Techs., Inc. v. Empak, Inc.,
268 F.3d 1364 (Fed. Cir. 2001) 19

Aventis Pharma S.A. v. Hospira, Inc.,
675 F.3d 1324 (Fed. Cir. 2012) 12, 13

B-K Lighting, Inc. v. Vision3 Lighting,
No. CV 06-02825, 2008 WL 4811176 (C.D. Cal. Mar. 13, 2008) 20

Bicon, Inc. v. Straumann Co.,
441 F.3d 945 (Fed. Cir. 2006) 3

CAE Screenplates Inc. v. Heinrich Fiedler GmbH & Co. KG,
224 F.3d 1308 (Fed. Cir. 2000) 25

Digital-Vending Servs. Int'l, LLC v. University of Phoenix, Inc.,
672 F.3d 1270 (Fed. Cir. 2012) 14

Fin Control Sys. Pty Ltd. v. OAM, Inc.,
265 F.3d 1311 (Fed. Cir. 2001) 14

Gart v. Logitech, Inc.,
254 F.3d 1334 (Fed. Cir. 2001) 4, 11

Greenberg v. Ethicon Endo-Surgery, Inc.,
91 F.3d 1580 (Fed. Cir. 1996) 25

Inventio AG v. Thyssenkrupp Elevator Americas Corp.,
649 F.3d 1350 (Fed. Cir. 2011) 7, 8, 24, 25

Liebel-Flarsheim Co. v. Medrad, Inc.,
358 F.3d 898 (Fed. Cir. 2004) 13

Micro Chem., Inc. v. Great Plains Chem. Co.,
194 F.3d 1250 (Fed. Cir. 1999) 17, 18, 20

Motorola Mobility, Inc. v. TiVo, Inc.,
No. 5:11-CV-53-JRG, 2012 U.S. Dist. LEXIS 174026 (E.D. Tex. Dec. 5, 2012) 18, 20

TABLE OF AUTHORITIES

Page(s)

Omega Eng'g, Inc. v. Raytek Corp.,
334 F.3d 1314 (Fed. Cir. 2003) 21

Ormco Corp. v. Align Tech., Inc.,
498 F.3d 1307 (Fed. Cir. 2007) 24

Phillips v. AWH Corp.,
415 F.3d 1303 (Fed. Cir. 2005) (*en banc*) 6, 14, 15, 21

Prima Tek II, L.L.C. v. Polypap, S.A.R.L.,
318 F.3d 1143 (Fed. Cir. 2003) 4

Rodime PLC v. Seagate Tech., Inc.,
174 F.3d 1294 (Fed. Cir. 1999) 3, 9

TorPharm Inc. v. Ranbaxy Pharms., Inc.,
336 F.3d 1322 (Fed. Cir. 2003) 6, 15

Typhoon Touch Techs., Inc. v. Dell, Inc.,
659 F.3d 1376 (Fed. Cir. 2011) 17

Wenger Mfg., Inc. v. Coating Mach. Sys., Inc.,
239 F.3d 1225 (Fed. Cir. 2001) 19, 20

WMS Gaming Inc. v. Int'l Game Tech.,
184 F.3d 1339 (Fed. Cir. 1999) 16

STATUTES

35 U.S.C. § 112, ¶ 6 ..... passim

Pursuant to the Court's Case Management Scheduling Order dated January 17, 2013, Plaintiff Fujifilm Corporation ("Fujifilm") submits this Opening Claim Construction Brief.

I. SUMMARY OF THE ARGUMENT

Throughout the asserted patents, Fujifilm proposes constructions that are true to the words in the claims, without adding extraneous limitations from the specification. On the other hand, contrary to controlling Federal Circuit precedent, Motorola repeatedly seeks to add restrictions on the claims taken from the specification but not required by the claim or, with respect to means-plus-function terms, that go beyond what is necessary to perform the claimed function.

II. ARGUMENT

A. U.S. Patent No. 5,734,427

1. Description of the Preferred Embodiment

U.S. Patent No. 5,734,427 ("the '427 Patent") (Ex. 1)[1] describes a digital camera that can record high resolution images on a recording medium (like a memory card). To facilitate the taking of photographs, the camera presents captured images on a viewfinder in a running sequence to provide a video image on the viewfinder. '427 Patent at 2:55-56.[2] Because the viewfinder may have a different resolution/format than the image to be recorded in memory, the preferred embodiment includes thinning and interpolation circuitry to match the image data to the resolution/format of the viewfinder. *Id.* at 2:52-55. Figure 1 of the '427 Patent is below:

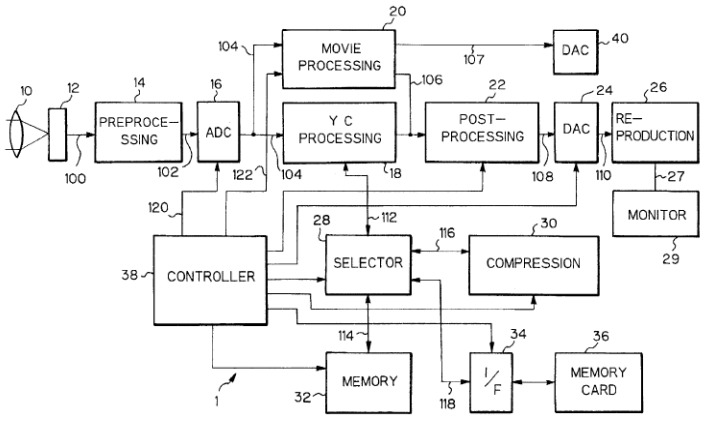

The image is captured by an imaging device 12. *Id.* at 2:57-61. After being converted to

[1] All Exhibits are to the Declaration of Bradford Cangro filed herewith unless otherwise noted.

[2] Citations to the Patents-in-Suit take the following form throughout this brief: (1) [Patent No.] at column:line-line or (2) [Patent No.] at column:line-column:line.

digital data by ADC 16, the image data takes two paths. Upon taking a picture, the image data follows a first path through the circuit to the memory card 36, where it is ultimately recorded for later use. *Id.* at 2:40-52. The image data also proceeds along a second path through movie processing circuitry 20, where it is processed to match the resolution of the viewfinder. *Id.* at 4:23-31. This movie processing includes a thinning operation to reduce the resolution of the original signal. *Id.* at 1:60-67. After processing, the image data (shown on line 106) moves through the circuit and is displayed on the viewfinder implemented by monitor 29. *Id.* at 2:55-56.

2. Disputed Terms and Their Proper Constructions

a. "Thinning" Limitations (claims 1, 6, 11, 14, 15 and 19)

The notion of "thinning" the image data appears throughout the asserted claims. For example, claim 1 describes: "thinning said first image signal to thereby produce a second image signal having a low resolution." Prior to thinning, claim 1 describes the first image signal as "having a high resolution." After thinning, the data is of a low resolution. Similarly, the patent specification describes that the imaging device outputs a "first image signal having a high resolution" ('427 Patent at 1:61-63), and a "processing circuit thins the first image signal to thereby produce a second image signal having a low resolution" (*id.* at 1:63-65). This concept is illustrated in Figure 3, where Figure 3A represents data from an image sensor. *Id.* at 7:29-32. As can be seen, there are 16 columns and 4 rows for a total of 64 data points. This high resolution data is captured by the image sensor and ultimately stored when the user takes a picture. Figure 3C illustrates the data after thinning, illustrating a reduction from 64 data points to 16 data points (or 8 columns and 2 rows). *Id.* at 10:64-67. The lower resolution image data is displayed on the monitor 29 for the user to use as a viewfinder to frame a desired image. Consistent with the claim language and specification, Fujifilm proposes the operative "thinning" language from claim 1 to track the plain meaning of the claim language. The Parties' respective constructions are as follows (JCC[3], Ex. A at 3-4):

"thinning said first image signal to thereby produce a second image signal having a low resolution" (claim 1)

[3] "JCC" refers to the Joint Claim Construction and Prehearing Statement (Dkt. No. 38) (Ex. 2).

Fujifilm's Construction	Motorola's Construction
reducing the pixel resolution of the first image signal to create a low resolution image signal representative of the subject	reducing, using weighted averaging, the resolution of the [image data] before any color interpolation into simultaneous RGB image data

The specification describes an exemplary thinning process where the resolution of the original data is reduced by outputting two pixels as a single pixel (by averaging) or discarding pixels. '427 Patent at 8:14-19.

Unlike Fujifilm's construction, Motorola's proposed construction adds a dizzying array of additional limitations, none of which are inherent in the claim language. Motorola's proposed construction requires "weighted averaging." JCC, Ex. A at 3. While other parts of claim 1 require weighted averaging, that requirement is not inherent in the plain meaning of "thinning." In fact, the mention of weighted averaging to thin data later in the claim strongly suggests that the "thinning" limitation itself does not require weighted averaging. *Aspex Eyewear, Inc. v. Marchon Eyewear, Inc.*, 672 F.3d 1335, 1348 (Fed. Cir. 2012) (reversing district court that construed an independent claim to have an "entirely duplicative" restriction present in a dependent claim); *Bicon, Inc. v. Straumann Co.*, 441 F.3d 945, 950 (Fed. Cir. 2006) ("[C]laims are interpreted with an eye toward giving effect to all terms in the claim."). This point is further driven home by the presence of some claims (like claim 1) that recite both "thinning" and weighted averaging, alongside other claims (like claim 11) that recite "thinning" but make no mention of weighted averaging. The inventor affirmatively decided to limit some claims to weighted averaging, while deciding not to place that restriction on other claims. Simply stated, the inventor knew how to add a weighted average requirement, and did so where he wanted. In other claims, the inventor did not want it, did not include it, and it is not present. It would be improper to add the restriction under the guise of claim construction. *Rodime PLC v. Seagate Tech., Inc.*, 174 F.3d 1294, 1304-05 (Fed. Cir. 1999).

Motorola's proposed construction also requires that the thinning occur "before any color interpolation into simultaneous RGB image data." JCC, Ex. A at 3. Claim 1 never says anywhere that thinning must precede interpolation, or that interpolation necessarily results in

simultaneous RGB image data. Those additional limitations are lifted from the specification and inserted into the claim by Motorola's proposal. Such insertions are improper. *Gart v. Logitech, Inc.*, 254 F.3d 1334, 1339 (Fed. Cir. 2001) (Claim construction is "simply a way of elaborating the normally terse claim language in order to understand and explain, but not to change, the scope of the claims.") (*quoting Embrex, Inc. v. Serv. Eng'g Corp.*, 216 F.3d 1343, 1347 (Fed. Cir. 2000)). It is black letter law that specification features cannot be read into claims that do not recite them. *Prima Tek II, L.L.C. v. Polypap, S.A.R.L.*, 318 F.3d 1143, 1148 (Fed. Cir. 2003) ("limitations may not be read into the claims from the written description"). Even more compelling in this instance is that other claims specifically recite an interpolation process after thinning occurs. *E.g.*, '427 Patent at claim 11. That is not the case with claim 1. Claim 1, which recites a thinning operation, does not recite an interpolation operation at all, nor does it require that any thinning occur prior to interpolation. Accordingly, thinning is not necessarily an operation that occurs before interpolation, much less before interpolation into "RGB image data," and Motorola's proposed construction should be rejected. The other instances of the thinning operation should be understood similarly (JCC, Ex. A at 3-5):

Disputed Term	**Fujifilm's Construction**	**Motorola's Construction**
"thinning said high-resolution pixel data output from said imaging device to thereby produce low-resolution image data" (claim 6)	reducing the pixel resolution of the pixel data output from the imaging device to create low-resolution image data representative of the subject	reducing, using weighted averaging, the resolution of the [image data] before any color interpolation into simultaneous RGB image data
"thinning said pixel data" (claim 11)	reducing the pixel resolution of the pixel data	reducing, using weighted averaging, the resolution of the [image data] before any color interpolation into simultaneous RGB image data
"thinning said high-resolution image data output from said imaging device to thereby produce low-resolution image data" (claims 14 and 15)	reducing the pixel resolution of the image data output from the imaging device to create low resolution image data representative of the subject	reducing, using weighted averaging, the resolution of the [image data] before any color interpolation into simultaneous RGB image data
"thinning said first image signal … to thereby produce a second image signal having low resolution" (claim 19)	reducing the pixel resolution of the image signal to create a low resolution image signal representative of the subject	reducing, using weighted averaging, the resolution of the [image data] before any color interpolation into simultaneous RGB image data

b. "a viewfinder … implemented by a video monitor" (claims 1, 6, 14, and 15)

The '427 Patent describes that successive frames of image data are converted into a video signal by reproduction circuit 26, and then displayed as a video signal on video monitor 29. '427 Patent at 3:37-40. The monitor 29 serves as a viewfinder allowing the user to frame an image to be stored in memory. *Id.* at 3:45-46. The language "a viewfinder … implemented by a video monitor" is plain on its face, and needs no construction. In the event the Court decides to construe it, Fujifilm proposes "a monitor serving as a viewfinder." JCC, Ex. A at 2. This construction is true to the words of the claim, without altering the meaning of the claim term. The Parties' respective constructions are as follows (JCC, Ex. A at 2):

Fujifilm's Construction	**Motorola's Construction**
Plain and ordinary meaning; Alternatively: a monitor serving as a viewfinder	a viewfinder […] implemented by a video monitor physically separate from the camera body

On the other hand, Motorola's construction deviates from the plain meaning by requiring that the monitor be "physically separate" from the camera body. The claims do not recite a camera body, much less do they require that the monitor be physically separate from the body. Again, this is a feature of the preferred embodiment that Motorola improperly attempts to incorporate into claims that recite no such limitation. Furthermore, the impropriety of Motorola's addition is confirmed by reference to the prosecution history and the specification.

Original claim 2 of the patent application that would become the '427 Patent contained the requirement of a "viewfinder . . . implemented by a video monitor." Ex. 3 at 28 (FF64). On July 29, 1996, the Examiner rejected application claim 2 based on the prior art, relying on U.S. Patent No. 4,740,828 to Kinoshita, and stating: "Kinoshita states in col. 5 in the first full paragraph that the monitor is the built-in monitor of a video camera – which implies that it is used as the camera viewfinder." Ex. 4 at 2 (FF122). The Examiner unquestionably understood that a built-in video monitor would meet the claim, as the prior art that he used to reject the claim contained a video monitor that was integrated with the camera body (something he expressly noted in the Office Action). This is the exact opposite of the requirement that Motorola proposes to impose on the

claim. Looking at the prior art Kinoshita patent, it discusses that a "monitor 24 is composed of, for example, a liquid crystal display device (LCD), an electro-chrominance display device (ECD), a cathode-ray display tube, or the like." Ex. 5 at 5:6-9. The display is described as a "built-in monitor 24." *Id.* at 5:16. The drawings of the Kinoshita patent depict the monitor connection in the same manner in which it is shown in the '427 Patent. *Compare* Ex. 5, Figure 1, monitor 24 *with* '427 Patent, Figure 1, monitor 29. Applicant responded to the Office Action on November 27, 1996. Applicant never argued that the Konishita monitor did not meet the claims because it was a built-in monitor. Rather, Applicant argued that a "video monitor is one whose display is in color" while Kinoshita "is a black and white monitor." Ex. 6 at 14 (FF144). Therefore, the inventor also understood the claim to be broad enough to cover built-in or separate monitors, and never made any indication to the contrary. *TorPharm Inc. v. Ranbaxy Pharms., Inc.*, 336 F.3d 1322, 1330 (Fed. Cir. 2003) ("Whether the patentee chooses to dispute the examiner's view of matters is relevant to claim interpretation"). Both the Examiner and Applicant used the ordinary meaning of monitor and viewfinder, and did not understand the claim to require the monitor to be "physically separate from the camera body." *Phillips v. AWH Corp.*, 415 F.3d 1303, 1317 (Fed. Cir. 2005) (*en banc*) (holding that "the prosecution history provides evidence of how the PTO and the inventor understood the patent").

Moreover, the specification of the '427 Patent includes further supporting language. For example, the '427 Patent describes that, "to play the role of a viewfinder," "[t]he monitor 29 is connected to the reproduction 26 by a wire or radio 27 [… , which] may have a <u>fixed configuration</u> or a separable configuration." '427 Patent at 3:45-48 (emphasis added). The '427 Patent further describes as one of the advantages of the camera, "eliminat[ing] the need of a high-resolution monitor and, therefore, <u>reduc[ing] … the space for the installation of a monitor</u>." *Id.* at 12:10-13 (emphasis added). Thus, the '427 Patent makes clear that the claimed monitor may be fixed to and/or installed on the camera, as the ordinary meaning of the claim term suggests.

Motorola's construction should be rejected in favor of the plain meaning of "a viewfinder … implemented by a video monitor."

c. "imaging device for shooting a subject and outputting (a)

corresponding (first color image signal having a high resolution/high resolution pixel data) to be recorded in a recording medium" (claims 1, 6, 14, and 15)

As an initial matter, the parties dispute whether this claim limitation must be interpreted under 35 U.S.C. § 112, ¶ 6 (so-called means-plus-function). The first and most highly germane fact to resolving this dispute comes from the claim language itself. The word "means" appears nowhere in the claim language. Rather, the claim recites an "imaging device," a structure rather than a "means." The Federal Circuit addressed this disputed issue squarely in *Inventio AG v. Thyssenkrupp Elevator Americas Corp.*, 649 F.3d 1350 (Fed. Cir. 2011). Like this case, in *Inventio*, the alleged infringer argued that claim limitations missing the telltale "means" language ("modernizing device" and a "computing unit") were nonetheless means-plus-function claim limitations. The district court accepted the argument, but the Federal Circuit reversed.

First, the Federal Circuit confirmed that, in the absence of the word "means," there is a presumption that § 112, ¶ 6 does not apply. *Id.* at 1356. Second, and most importantly, the Federal Circuit recognized that using the word "means" is "central to the analysis" and that "the terms 'means' and 'means for' have become closely associated with means-plus-function claiming." *Id.* Since these are the conventions that practitioners have come to use, the Federal Circuit noted that "the presumption flowing from the absence of the term 'means' is a strong one that is not readily overcome." *Id.* The logic of *Inventio* is simple and straightforward: patent lawyers have a well-known and unambiguous way of indicating that they want to invoke ¶ 6 interpretation (*i.e.*, use the word "means"). Therefore, when the word is not present, the claim limitation is not interpreted using ¶ 6 absent compelling evidence that was what was intended.

Now turning to the claim limitation at issue here, "imaging device," it is plainly a structural element not a functional element. It is described structurally in the specification: (1) having a light sensitive surface; (2) being solid state, and (3) outputting an electrical signal representative of the image. '427 Patent at 2:57-61. The claim states that it is a "device" that shoots a subject and outputs a signal representative of the subject. Turning back to *Inventio*, these structural descriptions preclude treating claim elements as means-plus-function:

In this case, the claims indicate that the "modernizing device" functions as an

> electrical circuit that receives signals, processes signals, and outputs signals to other components in the patented system….
>
> The written descriptions support the conclusion that the claimed "modernizing device" is not a purely functional limitation. As detailed above, the written descriptions depict the modernizing device and its internal components, namely, the processor signal generator….
>
> In sum, the claims and written descriptions show that ThyssenKrupp has failed to overcome the presumption that the claimed "modernizing device" is not a means-plus-function limitation….

Inventio, 649 F.3d at 1358-59. In the preferred embodiment, a CCD image sensor with either 1.3M or 400k pixels is used as the imaging device. '427 Patent at 2:61-64. This is further evidence that imaging device is structural rather than functional as *Inventio* also explained:

> The written descriptions also indicate that the "computing unit" connotes structure to skilled artisans. As the claim term implies, the written descriptions refer to the computing unit as a computer, where one of its functions is to store and execute a computer program product.

Inventio, 649 F.3d at 1359-60. If there were doubt that the "imaging device" limitation is not a means-plus-function limitation, *Inventio* resolves it.

In the event the Court were to conclude that the claim limitation is subject to § 112, ¶ 6, which Fujifilm believes would be legal error, the function is "capturing the image of a subject and outputting a corresponding (high-resolution color image signal/high-resolution pixel data) to be recorded in memory." Motorola's proposed function omits parts of the claim language, and is therefore less accurate than Fujifilm's proposal. JCC, Ex. A at 5-6. The corresponding structure is imaging device 12. Motorola's proposal to limit the structure to a CCD (charge coupled device) is overly narrow, as the patent describes that "[i]n the illustrative embodiment, the imaging device 12 is implemented as a CCD image sensor." '427 Patent at 2:61-62. Applicant further indicated during the prosecution history the exemplary nature of the reference to a CCD image sensor. *See* Ex. 6 at 12 (FF142) ("… having an image sensor, such as a CCD, for capturing …") (emphasis added). Plainly, this language does not limit the imaging device to a CCD (one very specific type of imaging device). Rather, a CCD is one example of an imaging device, and the claims are more broadly directed to an imaging device in general. Also instructive is the fact that claim 5 (dependent on claim 1) specifically recites a CCD as the imaging device. This is

further evidence that the imaging device of claim 1 does not correspond solely to the CCD. Else claim 5 would not separately recite this specific limitation. *Rodime*, 174 F.3d at 1304-05.

The "imaging device" term is not governed by § 112, ¶ 6, and Motorola's attempts to limit the imaging device to a CCD should be rejected.

B. U.S. Patent No. 6,144,763

1. Description of the Preferred Embodiment

U.S. Patent No. 6,144,763 ("the '763 Patent") (Ex. 7) describes a digital camera that can capture and store either color or monochrome images. Regardless of whether the color or monochrome mode is selected, the resultant pictures are stored in a format (like JPEG) that can be used by standard image reproduction devices (like a computer). Figure 1 is a block diagram of the preferred embodiment:

Fig. 1

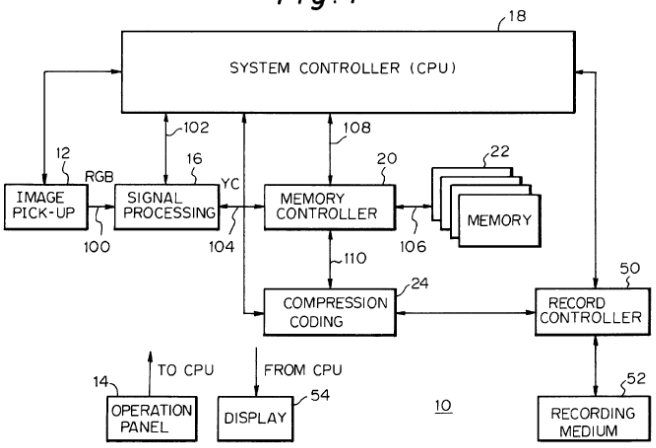

Image pick-up 12 captures an image, and transfers an image signal to signal processing 16 that, among other things, converts the signal to digital values. '763 Patent at 4:14-16, 51-55. The digital image signal is then converted to an image format consisting of luminance and chrominance components, and stored temporarily in memory 22. *Id.* at 4:55-59; 5:40-48. The luminance data conveys the brightness of the image at each point. The chrominance data conveys the color of the image at each point. If the camera is operating in color mode, the data is then compressed in accordance with a standard image format like JPEG and stored to the recoding medium 52. *Id.* at 5:54-62; 9:30-10:27.

If the user has selected the monochrome mode, then the chrominance values are fixed to a

set value (*i.e.*, color data is eliminated). The luminance values are not changed, and still represent the brightness of the image. The luminance values and fixed chrominance values are compressed in accordance with a standard format (like JPEG), and stored to the recording medium 52. This results in a monochrome image being stored. *Id.* at 10:44-45; 10:56-12:5.

2. Disputed Terms and Their Proper Constructions

a. "writing processed image data output from a signal processing circuit in a storage, and reading the processed image data out of said storage in preselected blocks component by component" (claim 12)

and

"storage for storing the processed image data and allowing the processed image data to be read out in preselected blocks component by component" (claims 1 and 19)

These two phrases present the same dispute, so they are treated together herein. The Parties' respective constructions are as follows (JCC at 2):

Term	**Fujifilm's Construction**	**Motorola's Construction**
writing processed image data output from a signal processing circuit in a storage, and reading the processed image data out of said storage in preselected blocks component by component (claim 12)	writing processed image data that is outputted from a signal processing circuit into a storage, and reading that processed image data from the storage in preselected blocks on a component-by component basis	writing at least one frame of processed image data output from a signal processing circuit in a storage, and before reading the processed image data out of said storage in preselected blocks on a component-by component basis
storage for storing the processed image data and allowing the processed image data to be read out in preselected blocks component by component (claims 1 and 19)	storage for storing the processed image data and for allowing the processed image data to be retrieved from the storage in preselected blocks on a component-by-component basis	storage holding at least one frame of processed image data, and for allowing the processed image data to be retrieved from the storage in preselected blocks on a component-by-component basis

The "writing processed image data . . . and reading the processed image data" claim limitation is clear on its face, and needs no construction. Nonetheless, after Motorola chose this term for construction, Fujifilm provided a construction that stays true to the claim language: "writing processed image data that is outputted from a signal processing circuit into a storage, and reading that processed data from the storage in preselected blocks on a component by component

basis." Rather than staying true to the claim language, notice that Motorola blatantly changes the language to require "at least one frame," seemingly requiring a frame-by-frame (or multiple frame-by-frame) process, even though the claim says nothing about that. The claim element itself explains that data is read out "in preselected blocks" "component by component." In other words, when the inventor wanted to specify certain sizes of data to be processed, or the ordering of data, he did so. The inventor did not specify "at least one frame" be written before any reading occurs. That is improper claim modification, not claim construction. *Gart*, 254 F.3d at 1339.

As for the "storage" limitation, this limitation is also clear on its face and needs no construction. If construed, the Court should adopt Fujifilm's construction: "storage for storing the processed image data and for allowing the processed image data to be retrieved from the storage in preselected blocks on a component-by-component basis." Again, Motorola improperly adds a size requirement ("at least one frame") that appears nowhere in the claim language.

C. U.S. Patent No. 6,915,119

1. Description of the Preferred Embodiment

U.S. Patent No. 6,915,119 ("the '119 Patent) (Ex. 8) describes a cellular telephone that communicates both (1) over a cellular network to a provider (like Verizon or ATT) and (2) over a local communication link (such as Bluetooth) to a local device (such as a computer). This allows the telephone to receive data (such as a photograph) over the cellular link, and then transmit it on to a computer or printer via the local communication link without using the cellular connection. Figure 3 is illustrative:

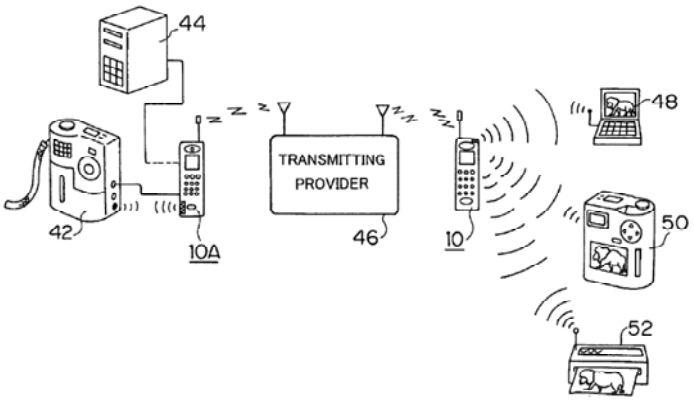

Two cellular phones 10A and 10 communicate over a cellular network using transmitting

provider 46. '119 Patent at 3:8-10. In one example, a photograph taken by camera 42 is sent to phone 10A, which uses the transmitting provider to transmit the photograph to phone 10. *Id.* at 3:11-14. Phone 10 receives the photograph over the cellular network, and then transmits the data via a local communication link to, for example, a printer 52 or computer 48. *Id.* at 3:14-23.

2. Disputed Term and Its Proper Construction

a. "menu (comprises/includes) selections for [a], …, [y], and [z]" (claims 1, 7, 12, 19, 32, and 38)

The Parties' respective constructions are as follows (JCC, Ex. A at 6):

Fujifilm's Construction	**Motorola's Construction**
Plain and ordinary meaning; Alternatively: menu includes options representing the following: [a], …, [y], and [z]	A single screen displaying selections for each of [a]…, [y], and [z]

This claim term requires no construction. A menu with a stated set of selections is well-understood, including by laypersons that will serve on the jury. Whether a menu is in a restaurant or on a cellular phone, it simply provides options for selection. If construed, Fujifilm proposes "menu includes options representing the following: [a], …. [y], and [z]," which stays true to the claim language. Motorola's proposed construction limits a menu to a "single screen." The ordinary meaning of menu is not limited to one page or screen. Just like a restaurant menu often offers too many options to be presented on a single page, most cellular phones have too many menu options to list on a single screen, and therefore use multiple screens to fully display the options. Motorola's construction does not match the term's plain meaning.

Motorola faces a tall hurdle in justifying abandonment of the plain meaning of the term. *Aventis Pharma S.A. v. Hospira, Inc.*, 675 F.3d 1324, 1330 (Fed. Cir. 2012). In *Aventis*, the Federal Circuit noted that it had recently "reiterated the stringent standard" for narrowing a claim beyond its plain and ordinary meaning. *Id.* (*citing Thorner v. Sony Computer Entertainment America L.L.C.*, 669 F.3d 1362 (Fed. Cir. 2012)). As explained, the only "two circumstances" that allow narrowing a claim beyond its ordinary meaning are (1) where the patentee acts as his own lexicographer, and (2) where there is a purposeful disavowal of claim scope. To be his own

lexicographer, the patentee must clearly offer a definition of a claim term that is different than its plain meaning. There is no evidence that "menu" was redefined to mean "single screen" anywhere in the '119 Patent specification. In fact, as will be described, the patent contemplates multi-page menus. A purposeful disavowal results when the patentee uses words of "manifest exclusion or restriction, representing a clear disavowal of claim scope." *Id.* (internal quotations omitted). Motorola can point to no disavowal of claim scope. This law applies even where only a single embodiment is disclosed in the specification. *Liebel-Flarsheim Co. v. Medrad, Inc.*, 358 F.3d 898, 906 (Fed. Cir. 2004) ("Even when the specification describes only a single embodiment, the claims of the patent will not be read restrictively unless the patentee has demonstrated a clear intention to limit the claim scope using 'words or expressions of manifest exclusion or restriction.'") (*quoting Teleflex, Inc. v. Ficosa N. Am. Corp.*, 299 F.3d 1313, 1327 (Fed. Cir. 2002)). Therefore, there is no basis to limit "menu" to a single screen.

Motorola's "single screen" limitation is particularly outrageous given the patent itself contemplates a menu that is multi-screen. Claim 19 recites "a display device for displaying a menu for designating the data for reception by the wireless telephone and displays received information on data of at least one of images and characters." This claim language corresponds to the menu shown on the phone in Figure 1:

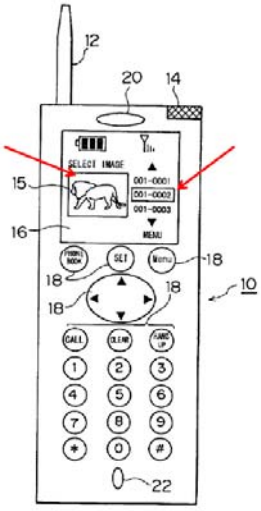

One can see the file names (*e.g.*, 001-0002), and image 15. Moreover, the word "MENU" appears in the figure. Claim 19 continues that "said menu comprises selections for a receive

mode for indicating that data has been received, a transmit image mode for transmitting an image from the wireless telephone to an apparatus, a receive mail mode for receiving characters, and a transmit mail mode for transmitting characters." The words "said menu" are important and indicate that the previously-mentioned menu must have the four additional options recited. Those four menu options are shown in Figure 4, on a different screen than the first-recited menu options:

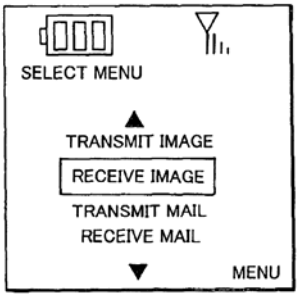

Plainly, the recited menu options from claim 19 are not on a single screen as they would not fit on a single screen. Therefore, reading a single screen requirement into the claims (as Motorola proposes) not only violates black letter law concerning varying a claim term from its plain meaning, but it also contradicts other claims. This same situation exists with claim 31 (reciting the menu options from the screen in Figure 1) and claim 32 (depending from claim 31 and reciting the menu options from the screen in Figure 4). *See Phillips*, 415 F.3d at 1314 ("Because claim terms are normally used consistently throughout the patent, the usage of a term in one claim can often illuminate the meaning of the same term in other claims."). In this case, the word "menu" should be given the same meaning throughout the claims because there is no indication that different meanings were intended in different claims. *Digital-Vending Servs. Int'l, LLC v. University of Phoenix, Inc.*, 672 F.3d 1270, 1275 (Fed. Cir. 2012) (claim terms are "presumed to have the same meaning throughout all of the claims in the absence of any reason to believe otherwise"); *Fin Control Sys. Pty Ltd. v. OAM, Inc.*, 265 F.3d 1311, 1318 (Fed. Cir. 2001) (There is a "presumption that the same terms appearing in different portions of the claims should be given the same meaning unless it is clear from the specification and prosecution history that the terms have different meanings at different portions of the claims").

Furthermore, the '119 prosecution history indicates that the Examiner understood the term "menu" to include multi-page menus, and the Applicant never argued to the contrary. During

prosecution, application claims 13 and 14 were added, reciting the "menu comprising" term at issue here. Ex. 9 at 4-5 (FF419-20). On May 5, 2003, the Examiner rejected application claims 13 and 14 based on the prior art, relying on U.S. Patent No. 6,330,244 to Swartz et al., and stating that "Swartz et al further discloses said display device includes a menu having selections for a receive mode …, a receive mail mode …, and a transmit mail mode …." Ex. 10 at 10-11 (FF443-44). The prior art Swartz patent teaches a "set of menus which can be used to send and display page messages, …, etc." Ex. 11 at 15:29-34. The Examiner did not and could not reasonably suggest that the Swartz patent discloses selections for all of the recited modes on a single screen[4], yet the Examiner considered Swartz's "set of menus" to meet the "menu comprising" limitation of the claim. Here again, Motorola proposes to impose a requirement on a claim term that is the exact opposite of how the term was applied during prosecution. Furthermore, the Applicant never argued that the "set of menus" did not constitute the claimed "menu," instead distinguishing the prior art on the basis that "in Schwartz [sic] the user is not given an option of whether to 'transmit' the data to an apparatus." Ex. 12 at 10 (FF476). Therefore, it is clear that both the Examiner and Applicant understood the ordinary meaning of the claim to be broad enough to cover multi-page menus. *Phillips*, 415 F.3d at 1317 (holding that "the prosecution history provides evidence of how the PTO and the inventor understood the patent"); *TorPharm*, 336 F.3d at 1330.

It would be legal error to limit "menu" to a "single screen" as Motorola proposes.

D. U.S. Patent No. 7,327,886

1. Description of the Preferred Embodiment

U.S. Patent No. 7,327,886 ("the '886 Patent") (Ex. 13) describes a digital camera where an electronic view finder provides a moving image of the data captured by the image sensor. '886 Patent at 2:30-33; 4:6-10. The camera checks a frame of image data to see if a face is present in the frame, and if so, records its location (for purposes of correcting red-eye caused by

[4] In fact, the screen of Swartz was likely too small to include all of the recited menu options on a single screen, showing up and down arrows to scroll to other options just like Figures 1 and 4 of the '119 Patent. Ex. 11 at, *e.g.*, Fig. 11A.

flash, for example). *Id.* at 4:10-16. The process of checking to see if a face is present in a frame is repeated until a picture is taken. *Id.* at 2:30-33. If the scene being framed in the view finder changes over time (before the photograph is taken), the presence and/or location of the face is updated. *Id.* at 4:16-22.

2. Disputed Terms and Their Proper Constructions

a. "face judgment means for performing processing, in a predetermined time interval, for judging whether a human face is included in a frame in the moving image until a positive result is obtained in the judgment" (claim 1)

The patent statutes permit claim elements to be "expressed as a means or step for performing a specified function without the recital of structure, material, or acts in support thereof . . . ." 35 U.S.C. § 112, ¶ 6 (1975). Claim elements drafted in this way are construed "to cover the corresponding structure, material, or acts described in the specification and equivalents thereof." *Id.* The parties agree that the "face judgment means" term is subject to 35 U.S.C. § 112, ¶ 6. JCC, Ex. A at 12. When claim elements are subject to § 112, ¶ 6, a two-step construction process is used. *AllVoice Computing PLC v. Nuance Commc'ns, Inc.*, 504 F.3d 1236, 1240 (Fed. Cir. 2007). The first step is to identify the particular claimed function, using ordinary principles of claim construction to guide the interpretation of the claim language. *Id.* The second step is to use the perspective of a person of ordinary skill in the art to identify the corresponding structure in the written description that performs the particular function in the claim. *Id.* at 1240-1241.

Here, the parties agree upon the claimed function, but disagree as to the corresponding structure. JCC, Ex. A at 12-13. The claimed function, as the parties agree, is "performing processing, in a predetermined time interval, for judging whether a human face is included in a frame included in the moving image until a positive result is obtained in the judgment." *Id.* With respect to the corresponding structure, the parties appear to agree that where, as here, "the disclosed structure is a computer, or microprocessor, programmed to carry out an algorithm, the disclosed structure is not the general purpose computer, but rather the special purpose computer programmed to perform the disclosed algorithm." *WMS Gaming Inc. v. Int'l Game Tech.*, 184

F.3d 1339, 1349 (Fed. Cir. 1999). However, the parties disagree on the proper scope of the corresponding algorithm.

Under Federal Circuit law, the proper corresponding algorithm consists only of the portion of the written description "necessary to perform the claimed function." *See Micro Chem., Inc. v. Great Plains Chem. Co.*, 194 F.3d 1250, 1258 (Fed. Cir. 1999) (emphasis added). All one needs to do to obtain the benefit of §112, ¶ 6 is describe some structure in the specification corresponding to the "means" so that one can readily understand the meaning of the claim to comply with the particularity requirements of § 112, ¶ 2. *Typhoon Touch Techs., Inc. v. Dell, Inc.*, 659 F.3d 1376, 1384 (Fed. Cir. 2011). Thus, a patentee need not disclose every component of the structure, or significant details about the structure, corresponding to the means. *Id.* ("If the claims when read in light of the specification reasonably apprise those skilled in the art of the scope of the invention, §112 demands no more."). The Federal Circuit "permit[s] a patentee to express that procedural algorithm in any understandable terms including as a mathematical formula, in prose, or as a flow chart, or in any other manner that provides sufficient structure." *Id.* at 1385 (internal quotations omitted).

Turning to the '886 Patent, the specification describes that the CPU 12 functions as the face judgment means. '886 Patent at 7:20-26. The patent also describes the algorithm used by CPU 12 to perform the claimed function of "judging whether a human face is included in a frame included in the moving image":

> When the photography mode is set, the CPU 12 executes a program for judging whether a face is included in the image by performing face discrimination processing on a single frame included in the moving image, as described below. Accordingly, the CPU 12 judges whether a face is included in the single frame.
>
> The CPU 12 calculates a first characteristic value C1, which is used for discriminating the face, from a single frame Fri. The CPU 12 also calculates a second characteristic value C2 from an image within a facial candidate, extracted from the frame Fri as described later.

'886 Patent at 7:27-37.

The '886 Patent also describes that the process is repeated until a face is discriminated using the first and/or second characteristic values. In other words, it describes the portion of the algorithm that performs the remainder of the claimed function, namely performing the processing

"until a positive result is obtained in the judgment." Specifically, the '886 Patent states:

> If it is judged that a facial candidate is not included in the frame Fri in the first discrimination, or even if it is judged that a facial candidate is included in the frame Fri in the first distinction, if it is judged that the facial candidate is not a face in the second discrimination, the CPU 12 judges that a face is not included in the frame Fri. In this case, the CPU 12 performs the first and second discrimination on a frame Fri+1 after predetermined time (for example after 10 frames) to judge whether a face is included in the frame Fri+1 in a similar manner to the discrimination as described above.
>
> If the facial candidate, which was discriminated in the first discrimination, is discriminated as a face in the second discrimination, it is judged that a face is included in the frame Fri.

'886 Patent at 14:31-44.

As such, Fujifilm's proposed corresponding structure is:

> CPU 12 programmed to calculate a first characteristic value C1, which is used for discriminating the face from a single frame Fri, and if found, calculating a second characteristic value C2 from an image within a facial candidate extracted from the frame Fri. If it is judged that a facial candidate is not included in the frame Fri in the first discrimination or the second discrimination, the CPU 12 judges that a face is not included in the frame Fri and the CPU 12 performs the first and second discrimination on a frame Fri+1 after a predetermined time until a positive result is obtained; and equivalents thereof.

Other portions of the '886 specification include specific examples of how the first and second characteristic values may be calculated and how they can be used to discriminate a face from the image, as well as descriptions of other functions performed by the claimed inventions. For example, varying methods are described for generating discriminators, but these specific methods and specific discriminations are not required for the "judging" function to occur. *See, e.g.*, '886 Patent at 8:48-13:5. Judging can occur with other discriminators calculated by other methods as the patent contemplates. *Id.* Such specificity from the embodiments is not necessary in order to perform the claimed function, and thus is not appropriately included in the structure corresponding to the face judgment means limitation. *See Micro Chem.*, 194 F.3d at 1258; *see also Motorola Mobility, Inc. v. TiVo, Inc.*, No. 5:11-CV-53-JRG, 2012 U.S. Dist. LEXIS 174026, at *52 (E.D. Tex. Dec. 5, 2012).

Fujifilm's proposed construction for the corresponding structure of the "face judgment means" term closely tracks the language from the specification. Moreover, Fujifilm's proposed

construction carefully limits the corresponding structure to only that necessary to perform the recited function, as appropriate under Federal Circuit law. *See Asyst Techs., Inc. v. Empak, Inc.*, 268 F.3d 1364, 1371 (Fed. Cir. 2001) ("An electrical outlet enables a toaster to work, but the outlet is not for that reason considered part of the toaster."). In particular, while calculation of C1 and C2 are necessary to perform face judgment, the particular steps of generating the discriminators chosen from the various possibilities are not requirements to perform the function.

In contrast, Motorola construes this term to require much more than is necessary to perform the claimed function. Indeed, Motorola's proposed construction spans five pages in the parties Joint Claim Construction Chart, including a conglomeration of sections from throughout the '886 specification, pieced together with no regard for what is necessary to perform the claimed function. *See* JCC, Ex. A at 13-17. For example, although Motorola agrees with Fujifilm that the corresponding algorithm should include the calculation of the first and second characteristic values C1 and C2, Motorola's proposed construction further includes steps before the algorithm begins, *i.e.*, steps, which even Motorola describes as "preparatory." *See, e.g.*, JCC, Ex. A at 13 ("calculate a first characteristic value C1…. This step requires preparatory steps a and b…"). By way of further example, Motorola's proposed corresponding structure requires "read[ing] first [and second] reference data R1 [and R2] from system memory." JCC, Ex. A at 14, 16. However, inclusion of these steps into the corresponding structure is contrary to the '886 Patent specification, which specifically notes that "the processing for judging whether a face is included in the frame Fri" may be accomplished by methods other than "using the reference data R1 and R2, which has been obtained by using a machine learning method." '886 Patent at 18:63-19:3. These additions are detailed examples of ***how*** to calculate the characteristic values or perform one of the first and second discriminations. However, only the calculation of the characteristic values and the discriminations themselves – not the specific examples of how they are calculated or performed, which are inappropriately included in Motorola's proposed construction – are necessary to perform the recited function. Finally, claim 8 recites the aforementioned "reference data," plainly indicating that limitation should not be included in claim 1. *See Wenger Mfg., Inc. v. Coating Mach. Sys., Inc.*, 239 F.3d 1225, 1233-34 (Fed. Cir. 2001).

These and the other additions in Motorola's proposed construction that generally relate to the details of how to calculate the characteristic values and perform the discrimination are a clear indication that Motorola has lost sight of the admonition that "a court may not import functional limitations that are not recited in the claim, or structural limitations from the written description that are unnecessary to perform the claimed function." *Id.* at 1233; *see also Micro Chem.*, 194 F.3d at 1258 (§ 112, ¶ 6 "does not permit … incorporation of structure from the written description beyond that necessary to perform the claimed function"). Even if these additional steps added by Motorola's construction could be characterized as being required for the claimed invention to work, that by itself would still not be enough to properly include them in the corresponding structure. Indeed, the corresponding structure "need not include all things necessary to enable the claimed invention to work." *B-K Lighting, Inc. v. Vision3 Lighting*, No. CV 06-02825, 2008 WL 4811176, at *21 (C.D. Cal. Mar. 13, 2008) (quoting *Default Proof Credit Card System, Inc. v. Home Depot U.S.A., Inc.*, 412 F.3d 1291, 1298 (Fed. Cir. 2005)). "[O]nce the overall structure that performs the claimed function is identified, the court need not identify the internal components or characteristics of that structure that enable it to perform the function." *Id.* Such specific characteristics from the written description are precisely what Motorola seeks, improperly, to include in the construction of the face judgment means.

Motorola's proposed construction is not only inconsistent with the law, it is also inconsistent with Motorola's own arguments in *Motorola Mobility*, 2012 U.S. Dist. LEXIS 174026. Indeed, as plaintiff in that case, Motorola seemed to understand and agree with the claim construction principles cited here by Fujifilm when that court sided with Motorola in finding that "the specific pointer algorithms disclosed [in the specification] are not necessary to perform the claimed functions." *Id*. at *52 (citing *Wenger Mfg.*, 239 F.3d at 1233). Here, however, Motorola takes the opposite approach, attempting to import numerous, unnecessary limitations into the structure corresponding to the face judgment means.

Motorola's attempts should be rejected, and Fujifilm's construction should be adopted.

b. "face detection means for detecting a facial position in a frame, which is judged to include a face, if the face judgment means judges that the face is included in the frame" (claim 1)

The parties agree that the "face detection means" is a means-plus-function term, but they disagree about the meaning of the recited function and the identification of the corresponding structure. The parties' respective constructions are as follows (JCC, Ex. A at 17-18):

Fujifilm's Construction	**Motorola's Construction**
Function: detecting a facial position in a frame, which is judged to include a face, if the face judgment means judges that the face is included in the frame Structure: CPU 12 programmed to obtain the coordinate values at four corners of the rectangle enclosing the face; and equivalents thereof	Function: "detecting a facial position in a frame, if it has been previously determined by the face judgment means that a face is included in the frame" Structure: CPU 12 programmed to obtain the coordinate values at four corners of the rectangle enclosing the face, OR to obtain the center position of a mask used in discriminating the face and a radius of a circle with its center at the center position; and equivalents thereof.

(1) Construction of the Recited Function

The first step in construing a means-plus-function term is to identify the particular claimed function, using ordinary principles of claim construction to guide the interpretation of the claim language. *AllVoice*, 504 F.3d at 1240. "When construing the functional statement in a means-plus-function limitation, we must take great care not to limit impermissibly the function by adopting a function different from that explicitly recited in the claim." *Omega Eng'g, Inc. v. Raytek Corp.*, 334 F.3d 1314, 1322 (Fed. Cir. 2003) (internal quotations omitted). The appropriate starting place is the language of the claim itself. *See Phillips*, 415 F.3d at 1314 ("[T]he claims themselves provide substantial guidance as to the meaning of particular claim terms."). In this case, the language of the claim does not include any terms that need to be further defined or any terms with specialized meaning, so there is no need to deviate from the language of the claim, which is clear on its face. *See id.* at 1312 ("[T]he words of a claim are generally given their ordinary and customary meaning.") (quotations omitted). Thus, the function should be construed as Fujifilm proposes: "detecting a facial position in a frame, which is judged to include a face, if the face judgment means judges that the face is included in the frame."

By contrast, Motorola's construction changes the language, and thus the meaning, of the claimed function by adding limitations. For example, Motorola's construction adds that the frame be "previously determined by the face judgment means that a face is included in the frame."

(emphasis added). Not only is this additional language unnecessary, it also adds ambiguity and otherwise complicates the claim term rather than adding clarity. It is unclear to what this determination must be prior in order for it to have been done "previously."

(2) Construction of the Corresponding Structure

The parties agree that the corresponding structure includes a general purpose computer, CPU 12, but disagree on the algorithm performed by the general purpose computer. The '886 Patent states that when it is judged that the face is included in the frame Fri, "the facial position is detected by obtaining four coordinate values in the frame Fri of an original size, corresponding to the coordinate values at four corners of the region of 30x30 pixels." '886 Patent at 14:44-53. The patent explains, "in the present embodiment . . .[,] the coordinate values at four corners of a rectangle enclos[e] the face included in the frame Fri." *Id.* at 14:55-58. Accordingly, Fujifilm's proposed construction of the corresponding structure is "CPU 12 programmed to obtain the coordinate values at four corners of the rectangle enclosing the face; and equivalents thereof."

Motorola's construction includes an alternative method of detecting a facial position, namely "obtain[ing] the center position of a mask used in discriminating the face and a radius of a circle with its center at the center position." Motorola's alternative method does not comport with the specification, however, which defines the facial position in this embodiment as the center position "and the length of the radius of a circle with its center at the center position…." '886 Patent at 14:62-64 (emphasis added). Nevertheless, Fujifilm would not object to the inclusion of this alternative method as long as it is clear that it is only an alternative and that it includes the omitted portion (underlined above) of the algorithm.

c. "detecting a facial position in a frame, which is judged to include a face, if it is judged that the face is included in the frame" (claims 1 and 11)

Motorola asks to construe two closely worded terms in claims 1 and 11 of the '886 Patent as having the same construction as shown in the following chart (JCC, Ex. A at 12):

Disputed Term	**Fujifilm's Construction**	**Motorola's Construction**
Claims 1,11: "detecting a facial position in a frame, which is judged to include a	for claim 11: if the frame includes a face, detect the location of the face within	"identifying the location of a human face within frame if it has been previously

face, if [1: "the face judgment means judges that the face is included in the frame" 11: "it is judged that the face is included in the frame"]	the frame *[for claim 1, this term should not be construed separately from the "face detection means" element]*	determined that the frame contains a human face"

The term Motorola seeks to construe with respect to claim 1 appears only once in the claim – as part of the claimed function of "face detection means" term. Although Motorola has separately proposed a construction for this term in connection with the "face detection means" term, as noted above in Section II.D.2.b., Motorola now seeks to redefine this language yet again in a different way in connection with this claim term. That is, Motorola is proposing to define the exact same limitation two different ways. *Compare* JCC, Ex. A at 12 with JCC, Ex. A at 17-18. This claim term should only be defined once. As such, Fujifilm's construction of this term in claim 1 is included as the "function" part of its construction of the "face detection means" above.

With respect to claim 11, the term Motorola seeks to construe is clear on its face and needs no construction. Nevertheless, after Motorola chose this term for construction, Fujifilm provided a construction for this term that stays true to the claim language: "if the frame includes a face, detect the location of the face within the frame." Rather than seeking to define the claim, Motorola seeks to add limitations to the claim that are unsupported by the claim language and add ambiguity to the claim. For example, Motorola includes a requirement that "it has been previously determined that the frame contains a human face." This use of passive voice in Motorola's proposed construction adds ambiguity as to who or what is doing the determination. Moreover, the reference to "previously" in the construction makes it unclear as to when this determination is to be performed and to what the performance is prior.

E. U.S. Patent No. 8,306,285

1. Description of the Preferred Embodiment

U.S. Patent No. 8,306,285 ("the '285 Patent") (Ex. 14) shares the same specification as the '886 Patent.

2. Disputed Term and Its Proper Construction

a. "face judgment device for performing processing, at predetermined

or varying time intervals, for judging whether a human face is included in a frame" (claims 1 and 13)

Similar to the "imaging device" of the '427 Patent, the parties dispute whether this term is a means-plus-function term. As mentioned above, without the recitation of the term "means," there is a strong presumption that the term is not a means-plus-function term. *Inventio*, 649 F.3d at 1356. This presumption is further strengthened here by comparing the claims of the '285 Patent with its parent, the '886 Patent. *See Ormco Corp. v. Align Tech., Inc.*, 498 F.3d 1307, 1314 (Fed. Cir. 2007) (noting that the prosecution history of the claims of the parent application are relevant in construing the claims of the child patents).

Specifically, the term "means" is used throughout the claims of the '886 Patent, which raises a presumption that those terms are means-plus-function terms. *Inventio*, 649 F.3d at 1356 ("[T]he use of the word 'means' is central to the analysis, as the terms 'means' and 'means for' have become closely associated with means-plus-function claiming."). In fact, the parties agree, for example, that claim 1 of the '886 Patent includes eight means-plus-function limitations. *See* JCC at 2-3; JCC, Ex. A. at 12, 17-20. By contrast, the claims of the '285 Patent, while covering similar subject matter, are completely devoid of the use of the term "means" or "means for." Compare, for example, independent claims 1 from the '886 Patent and '285 Patent:

'886 Patent – Claim 1	**'285 Patent – Claim 1**
1. A photographing apparatus comprising: a photographing means . . . ; a display means . . .; a release means . . . ; a storage means . . .; a photographing control means . . .; a face judgment means . . . ; a face detection means . . . ; and a control means	1. A photographing apparatus comprising: a photographing device . . .; a display . . .; a release device . . .; a storage . . .; a photographing control device . . .; a face judgment device . . .; a face detection device . . .; and a control device . . ..

The structure of these claims is nearly identical and, with only a few exceptions, the only difference between them is the absence of the word "means" in the '285 Patent claims. The complete absence of the word "means" in the claims of the '285 Patent compared to frequent use of the word "means" in the '886 Patent is a clear indication that the patentee did not intend to

invoke § 112, ¶ 6 for the claims of the '285 Patent. Because of this clear intention, § 112, ¶ 6 should not apply to this term. *See Greenberg v. Ethicon Endo-Surgery, Inc.*, 91 F.3d 1580, 1584 (Fed. Cir. 1996) ("[P]atentee is afforded the option of using the means-plus-function format. The question then is whether, in the selection of claim language, the patentee must be taken to have exercised that option."); *see also CAE Screenplates Inc. v. Heinrich Fiedler GmbH & Co. KG*, 224 F.3d 1308, 1317 (Fed. Cir. 2000) ("In the absence of any evidence to the contrary, we must presume that the use of these different terms in the claims connotes different meanings."). Moreover, the "face judgment device" term is described structurally in the specification as a CPU, a common, well-known structure. '285 Patent at 7:11-23; *see also Inventio*, 649 F.3d at 1360-61 (computing unit described as CPU is structure and not means plus function).

In the event the Court were to conclude that this claim limitation is subject to § 112, ¶ 6, which Fujifilm believes would be legal error, the function is "performing processing, at predetermined or varying time intervals, for judging whether a human face is included in a frame of the moving image," which matches the claim language verbatim. Motorola's proposed function omits parts of the claim language, and is therefore less accurate than Fujifilm's proposal. JCC at 22. Although the parties disagree upon the specific corresponding structure, it appears that the parties agree it should be the same corresponding structure as the "face judgment means" term of the '886 Patent. Accordingly, Fujifilm incorporates herein its arguments regarding the appropriate corresponding structure of the "face judgment means" from Section II.D.2.a, *supra*.

III. CONCLUSION

Fujifilm respectfully requests that the Court adopt Fujifilm's claim constructions.

Dated: August 2, 2013

Respectfully submitted,

MORGAN, LEWIS & BOCKIUS LLP

By /s/ Rita E. Tautkus
Rita E. Tautkus
Attorneys for Plaintiff
FUJIFILM CORPORATION