Juanita Brooks (CSB No. 75934 / brooks@fr.com)
FISH & RICHARDSON P.C.
12390 El Camino Real
San Diego, CA 92130
Telephone: (858) 678-5070
Facsimile: (858) 678-5099

Michael J. Kane (Admission *pro hac vice* pending / kane@fr.com)
William R. Woodford (Admission *pro hac vice* pending / woodford@fr.com)
FISH & RICHARDSON P.C.
3300 Dain Rauscher Plaza
60 South Sixth Street
Minneapolis, MN 55402
Telephone: (612) 335-5070
Facsimile: (612) 288-9696

Limin Zheng (CSB No. 226875 / zheng@fr.com)
FISH & RICHARDSON P.C.
500 Arguello Street, Suite 500
Redwood City, CA 94063
Telephone: (650) 839-5070
Facsimile: (650) 839-5071

Attorneys for Plaintiff
Halo Electronics, Inc.

UNITED STATES DISTRICT COURT

NORTHERN DISTRICT OF CALIFORNIA
(SAN JOSE DIVISION)

HALO ELECTRONICS, INC.,

Plaintiff,

v.

BEL FUSE INC., ELEC & ELTEK (USA) CORPORATION, WURTH ELEKTRONIK MIDCOM, INC., and XFMRS, INC.,

Defendants.

Civil Action No. 3:07-cv-06222-RMW

DECLARATION OF WILLIAM R. WOODFORD IN SUPPORT OF HALO'S OPPOSITION TO DEFENDANT BEL FUSE'S MOTION TO DISMISS OR TRANSFER

I, William R. Woodford, declare as follows:

1. I am an attorney in the law firm of Fish & Richardson P.C. and I am counsel for Plaintiff Halo Electronics, Inc. in this matter.

2. In the late afternoon of December 7, 2007, an attorney for Bel Fuse sent me an email, which has been provided to the Court as Exhibit K to the December 31, 2007 Declaration of Mr.

Joshua Raskin. As the email indicates, I was the only Halo attorney who received the email from Bel Fuse's counsel. I was out of the office on December 7, 2007 travelling with my family for a weekend vacation. I did not see the email in question until after Halo's complaint was filed that day. Furthermore, the email had no impact on Halo's decision to re-file its patent infringement claims in the Northern District of California.

3. There are six inventors named on the Halo patents asserted against Bel Fuse and the three other Defendants in this case. One of the inventors, Mr. Jeff Heaton, works at Halo's office in Mountain View, California and thus resides in this judicial district. Another inventor, Mr. James Heaton, works at Halo's headquarters and resides in Nevada. Three other inventors on the Halo patents reside in Hong Kong and are not employees of Halo Electronics. I understand that these individuals travel to California occasionally on business.

4. Attached as Exhibit A is a true and correct copy of the Complaint for Patent Infringement filed on March 15, 2007, in the United States District Court for the District of Nevada, Case No. 2:07-cv-00331-PMP-PAL.

5. Attached as Exhibit B is a true and correct copy of the Complaint filed on May 8, 2007, in the United States District Court for the District of New Jersey, Case No. 2:07-cv-02168-HAA-ES.

6. Attached as Exhibit C is a true and correct copy of the First Amended Complaint filed on June 5, 2007, in the United States District Court for the District of New Jersey, Case No. 2:07-cv-02168-HAA-ES.

7. Attached as Exhibit D is a true and correct copy of the Order dated December 5, 2007, and filed on December 7, 2007, in the United States District Court for the District of Nevada, Case No. 2:07-cv-00331-PMP-PAL.

8. Attached as Exhibit E is a true and correct copy of the Brief in Support of Bel Fuse's Motion for Leave to File Second Amended Complaint, in the United States District Court for the District of New Jersey, Case No. 2:07-cv-02168-HAA-ES.

I declare under penalty of perjury under the laws of the United States of America that the forgoing is true and correct.

Executed this 25th day of January, 2008, at Minneapolis, Minnesota.

/w/ William R. Woodford
William R. Woodford

DECLARATION

Pursuant to General Order No. 45, Section X(B) regarding signatures, I attest under penalty of perjury that concurrence in the filing of this document has been obtained from William R. Woodford.

Dated: January 25, 2008

FISH & RICHARDSON P.C.

By: \s\ Limin Zheng
Limin Zheng

Attorneys for Plaintiff
HALO ELECTRONICS, INC.

60479663.doc

EXHIBIT A

Joshua L. Harmon, Esq. (jharmon@h-dlaw.com)
Nevada Bar No. 7004
HARMON & DAVIES, P.C.
1428 S. Jones Blvd.
Las Vegas, NV 89146
Telephone: (702) 733-0036
Facsimile: (702) 733-1774

Juanita Brooks (brooks@fr.com) (CA#75934)
FISH & RICHARDSON P.C.
12390 El Camino Real
San Diego, CA 92130
Telephone: (858) 678-5070
Facsimile: (858) 678-5099

Michael J. Kane (kane@fr.com) (MN#247625)
William R. Woodford (woodford@fr.com) (MN#322593)
Joshua H. Bleet (bleet@fr.com) (MN#351830)
FISH & RICHARDSON P.C.
3300 Dain Rauscher Plaza
60 South Sixth Street
Minneapolis, MN 55402
Telephone: (612) 335-5070
Facsimile: (612) 288-9696

Attorneys for Plaintiff

HARMON & DAVIES, P.C. ATTORNEYS AT LAW

UNITED STATES DISTRICT COURT

DISTRICT OF NEVADA

HALO ELECTRONICS, INC.,

Plaintiff,

v.

BEL FUSE INC.,
PULSE ENGINEERING, INC., and
TECHNITROL, INC.

Defendants.

Civ. Action No. _____

COMPLAINT FOR PATENT INFRINGEMENT

JURY TRIAL DEMANDED

///

///

HARMON & DAVIES, P.C.
ATTORNEYS AT LAW

COMPLAINT FOR PATENT INFRINGEMENT

Plaintiff, Halo Electronics, Inc. files this Complaint and demand for jury trial seeking relief for patent infringement by the Defendants. Halo Electronics, Inc. states and alleges the following:

JURISDICTION AND VENUE

1. This is an action for patent infringement arising under the patent laws of the United States, 35 U.S.C. §§ 100 *et seq*. This Court has subject matter jurisdiction pursuant to 28 U.S.C. §§ 1331 and 1338(a).

2. This Court has personal jurisdiction over each of the Defendants because each Defendant has substantial and continuous contacts within this judicial district and/or because each Defendant has committed acts of patent infringement within this judicial district, including placing infringing products into the stream of commerce under circumstances such that each Defendant reasonably should have anticipated being subject to suit in this judicial district. The Court also has personal jurisdiction over each of the Defendants because the acts of patent infringement are aimed at this judicial district and/or have effect in this judicial district.

3. Venue is proper in this District pursuant to 28 U.S.C. §§ 1391(b) and (c) and 1400(b).

THE PARTIES

4. Plaintiff Halo Electronics, Inc. ("Halo") is a corporation organized and existing under the laws of the state of Nevada, and having its principal place of business at 3005 East Post Road Front, Las Vegas, Nevada.

5. Defendant Bel Fuse Inc. is a corporation organized and existing under the laws of the state of New Jersey. Bel Fuse Inc.'s headquarters is located at 206 Van Vorst Street, Jersey City, New Jersey.

6. Defendant Pulse Engineering, Inc. is a corporation organized and existing under the laws of the state of Delaware. Pulse Engineering, Inc.'s worldwide headquarters is located at 12220 World Trade Drive, San Diego, California.

7. Defendant Technitrol, Inc. is a corporation organized and existing under the laws of the state of Pennsylvania. Technitrol, Inc.'s corporate headquarters are located at 1210 Northbrook Drive, Suite 470, Trevose, Pennsylvania.

8. Defendant Pulse Engineering, Inc. is a subsidiary of Technitrol, Inc.

COUNT I
(Patent Infringement)

9. Halo restates and realleges the preceding paragraphs of this Complaint.

10. On August 12, 1997, United States Patent No. 5,656,985 ("the '985 patent") entitled "Electronic Surface Mount Package" was duly and legally issued by the United States Patent and Trademark Office. Halo owns the '985 patent by assignment. A true and correct copy of the '985 patent is attached as Exhibit A.

11. On October 2, 2001, United States Patent No. 6,297,720 ("the '720 patent") entitled "Electronic Surface Mount Package" was duly and legally issued by the United States Patent and Trademark Office. Halo owns the '720 patent by assignment. A true and correct copy of the '720 patent is attached as Exhibit B.

12. On October 2, 2001, United States Patent No. 6,297,721 ("the '721 patent") entitled "Electronic Surface Mount Package" was duly and legally issued by the United States Patent and Trademark Office. Halo owns the '721 patent by assignment. A true and correct copy of the '721 patent is attached as Exhibit C to this Complaint.

13. On November 20, 2001, United States Patent No. 6,320,489 ("the '489 patent"), entitled "Electronic Surface Mount Package With Extended Side Retaining Wall," was duly and

H&D HARMON & DAVIES, P.C. ATTORNEYS AT LAW

legally issued by the United States Patent and Trademark Office. Halo owns the '489 patent by assignment. A true and correct copy of the '489 patent is attached as Exhibit D.

14. On February 5, 2002, United States Patent No. 6,344,785 ("the '785 patent"), entitled "Electronic Surface Mount Package," was duly and legally issued by the United States Patent and Trademark Office. Halo owns the '785 patent by assignment. A true and correct copy of the '785 patent is attached as Exhibit E.

15. On December 16, 2003, United States Patent No. 6,662,431 ("the '431 patent"), entitled "Electronic Surface Mount Package," was duly and legally issued by the United States Patent and Trademark Office. Halo owns the '431 patent by assignment. A true and correct copy of the '431 patent is attached as Exhibit F.

16. Defendants have been and are infringing, actively inducing others to infringe, and/or contributing to the infringement of the '985, '720, '721, '489, '785, and '431 patents.

17. Upon information and belief, Defendants have been and are infringing the '985, '720, '721, '489, '785, and '431 patents with knowledge of one or more of the patents, and thus Defendants' infringement is willful.

18. Upon information and belief, Defendants will continue to infringe the '985, '720, '721, '489, '785, and '431 patents unless and until they are enjoined by this Court.

19. The Defendants have caused and will continue to cause Halo irreparable injury and damage by infringing the '985, '720, '721, '489, '785, and '431 patents. Halo will suffer further irreparable injury, for which it has no adequate remedy at law, unless and until the Defendants are enjoined from infringing the '985, '720, '721, '489, '785, and '431 patents.

///

///

HARMON & DAVIES, P.C. ATTORNEYS AT LAW

PRAYER FOR RELIEF

WHEREFORE, Halo respectfully requests that this Court:

(1) Enter judgment that Defendants have infringed the '985, '720, '721, '489, '785, and '431 patents;

(2) Enter an order permanently enjoining Defendants and their officers, agents, employees, attorneys, and all persons in active concert or participation with any of them, from infringing the '985, '720, '721, '489, '785, and '431 patents;

(3) Award Halo damages in an amount sufficient to compensate it for Defendants' infringement of the '985, '720, '721, '489, '785, and '431 patents, together with prejudgment and post-judgment interest and costs under 35 U.S.C. § 284;

(4) Treble the damages awarded to Halo under 35 U.S.C. § 284 by reason of Defendants' willful infringement of the '985, '720, '721, '489, '785, and '431 patents;

(5) Declare this case to be "exceptional" under 35 U.S.C. § 285 and award Halo its attorney fees, expenses, and costs incurred in this action; and

(6) Award Halo such other and further relief as this Court deems just and proper.

JURY TRIAL DEMAND

Halo demands a trial by trial on all issues appropriately triable by a jury.

Dated: March 15, 2007

HARMON & DAVIES

By: /s/ Joshua L. Harmon, Esq.

Joshua L. Harmon, Esq.
Nevada Bar No. 7004
HARMON & DAVIES, P.C.
1428 S. Jones Blvd.
Las Vegas, NV 89146
Telephone: (702) 733-0036
Attorney for Plaintiff

H&D HARMON & DAVIES, P.C. ATTORNEYS AT LAW

EXHIBIT A

US005656985A

United States Patent [19]

Lu et al.

[11] Patent Number: 5,656,985

[45] Date of Patent: Aug. 12, 1997

[54] **ELECTRONIC SURFACE MOUNT PACKAGE**

[75] Inventors: **Peter Lu**, Flowermound, Tex.; **Jeffrey Heaton**, Cupertino; **James W. Heaton**, Los Altos, both of Calif.; **Peter Loh Hong Pao**, Hong Kong, China; **Robert Lake Hang Lam**, Hong Kong, China; **Tsang Kei Sun**, Hong Kong, Hong Kong

[73] Assignee: **Halo Electronics, Inc.**, Redwood City, Calif.

[21] Appl. No.: **513,573**

[22] Filed: **Aug. 10, 1995**

[51] **Int. Cl.**[6] **H01F 15/10**; H01F 27/02

[52] **U.S. Cl.** **336/96**; 174/52.4; 336/65; 336/192; 336/229; 361/821

[58] **Field of Search** 174/52.4; 361/821; 336/229, 192, 65, 90, 96

[56] **References Cited**

U.S. PATENT DOCUMENTS

4,205,291	5/1980	Flemtee	336/192
5,034,854	7/1991	Sumun et al.	336/192
5,307,041	4/1994	Kato et al.	336/192

FOREIGN PATENT DOCUMENTS

38-20060	9/1963	Japan	336/229
5-275253	10/1993	Japan	336/229

Primary Examiner—Thomas J. Kozma

Attorney, Agent, or Firm—Trial & Technology Law Group

[57] **ABSTRACT**

An electronic surface mount package provides a one piece construction package (with an open bottom) with one or more terminal pins molded into the package. Each of the pins have a notched post upon which a wire is wound which is from a toroid transformer carried within the package. Each of the posts are notched so their respective wires are separate from one another so as to prevent arcing. The case is opened at the bottom which prevents harm from expansion or cracking.

8 Claims, 5 Drawing Sheets

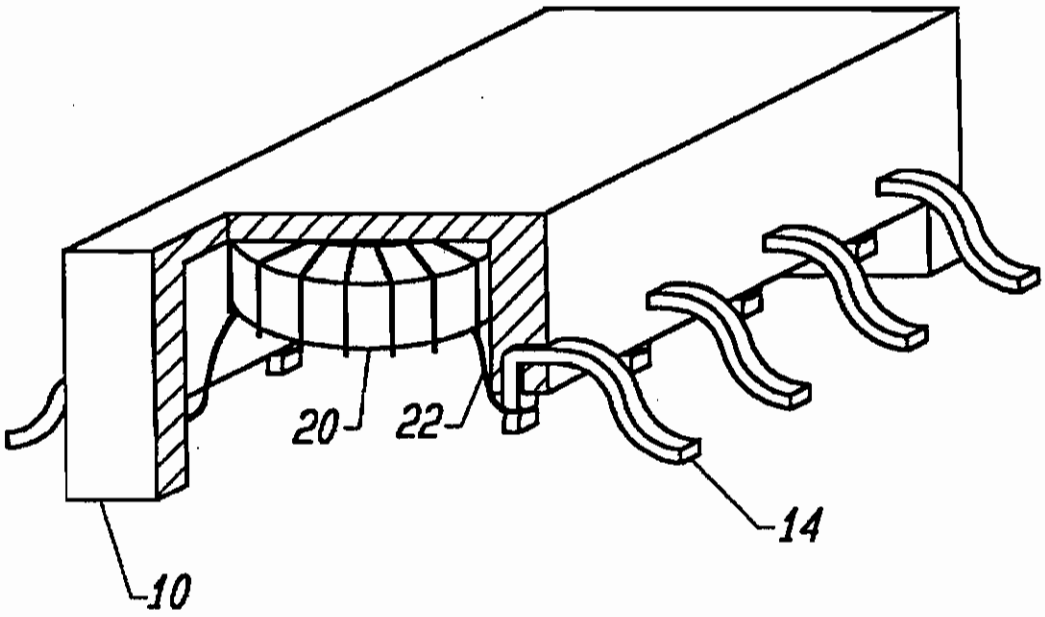

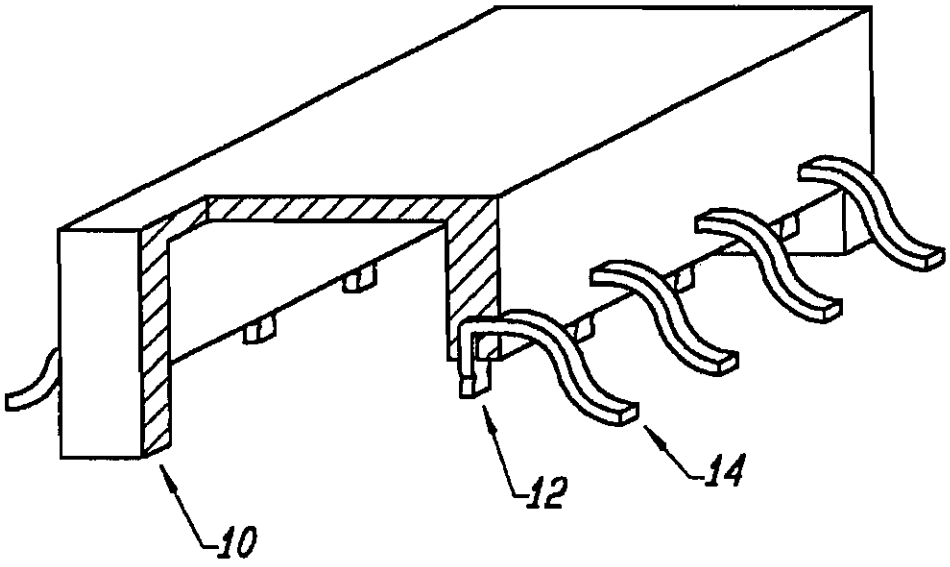

FIG. 1

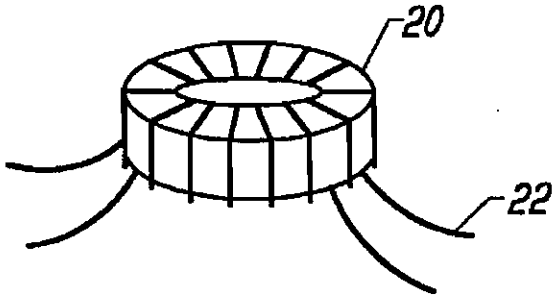

FIG. 2

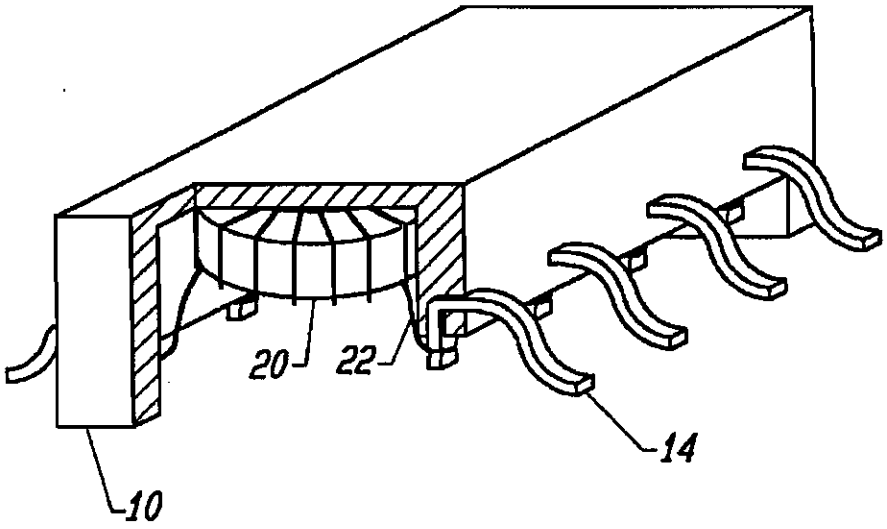

FIG. 3

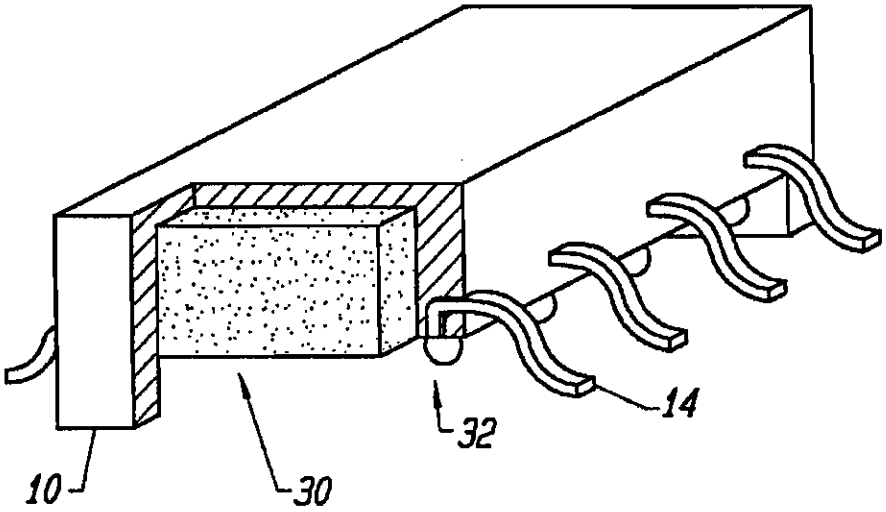

FIG. 4

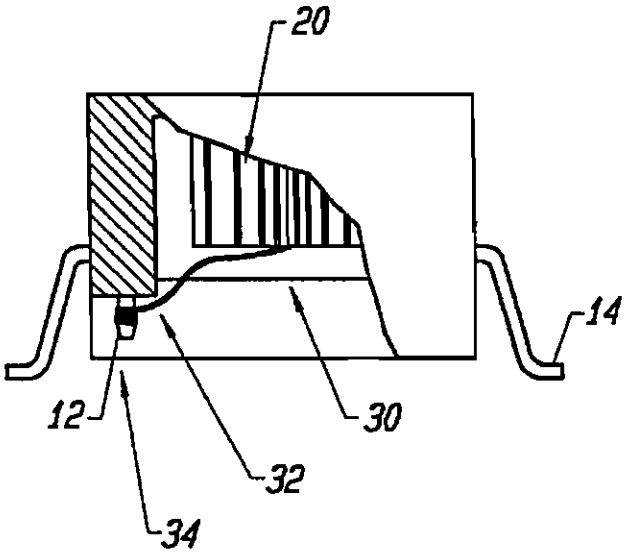

FIG. 5

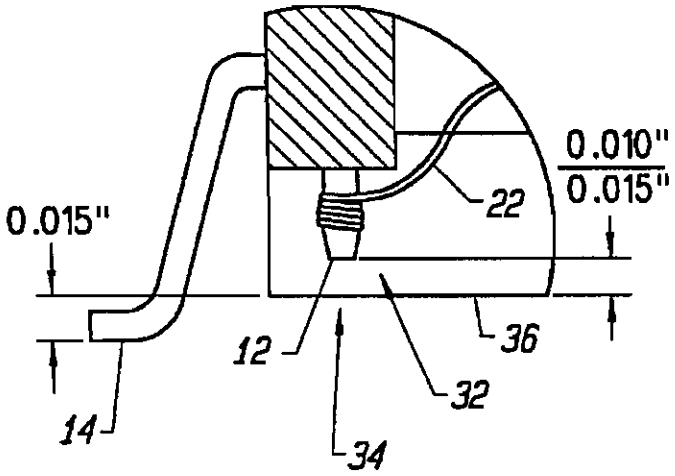

FIG. 6

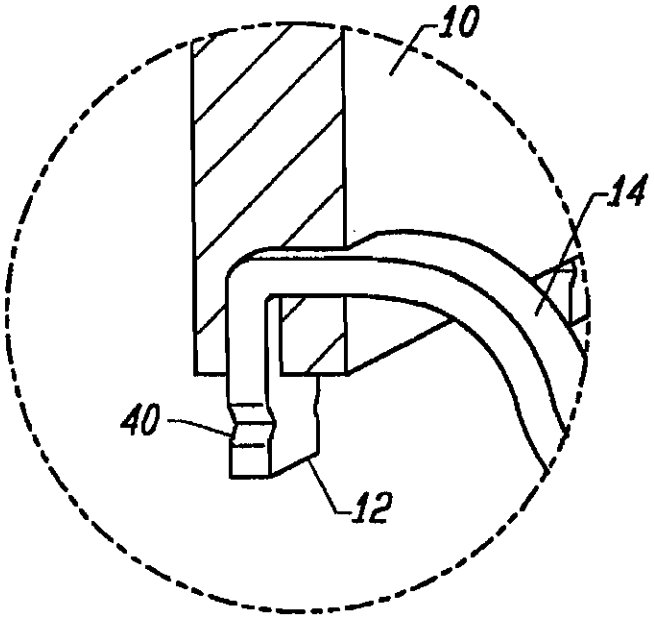

FIG. 7

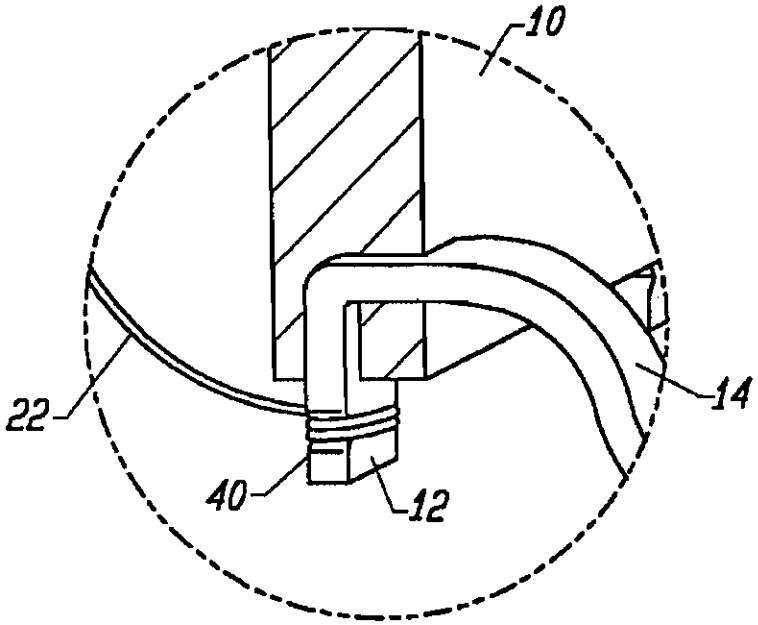

FIG. 8

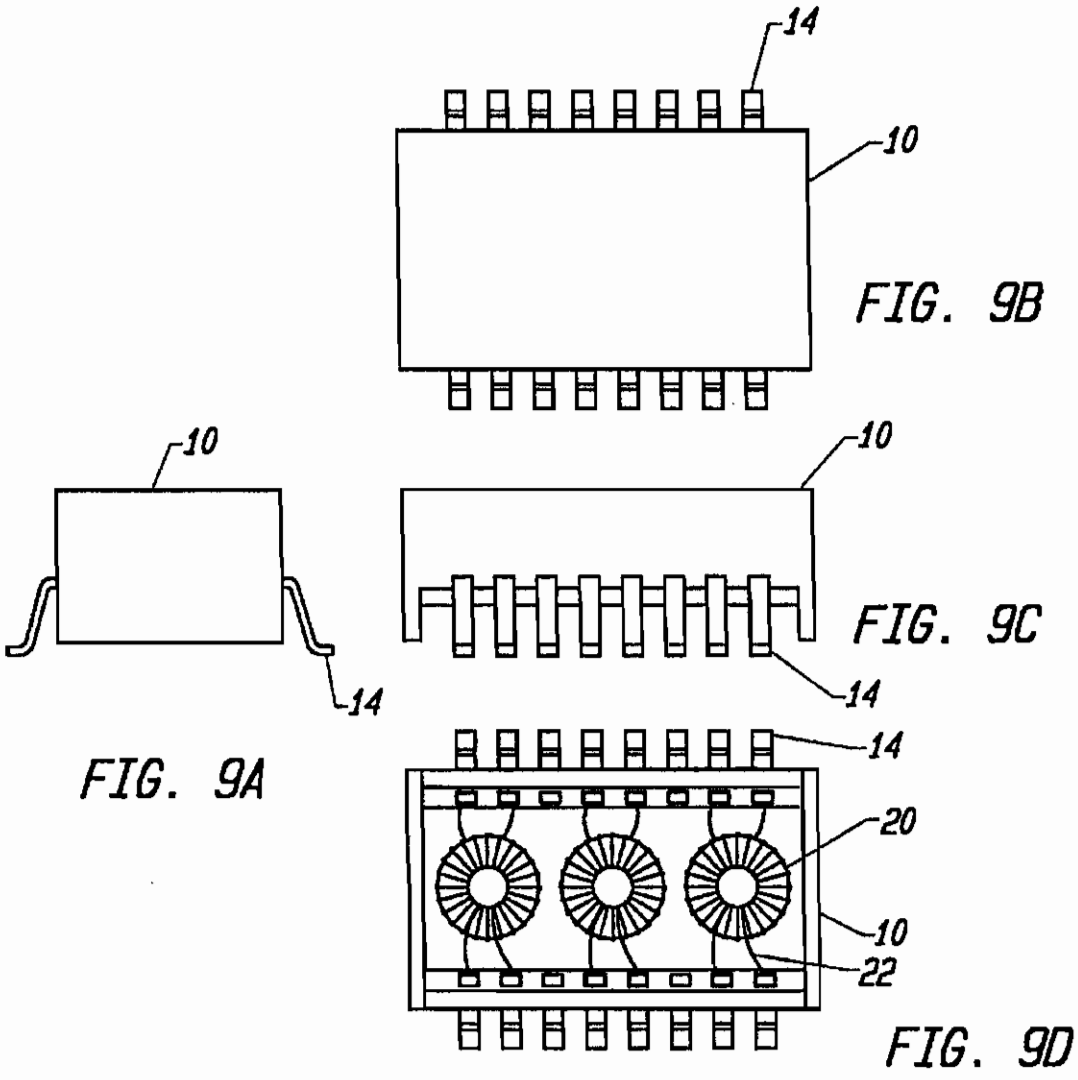

FIG. 9B

FIG. 9C

FIG. 9A

FIG. 9D

ELECTRONIC SURFACE MOUNT PACKAGE

BACKGROUND OF THE INVENTION

The present invention relates to an electronic surface mount package or case. Electronic surface mount packages are utilized in applications in which one or more individual toroid transformers are embodied within the surface mount package.

Wires coming off the transformers are electronically tied to pins on the package for connection to an electronic device. Typically, the electronic surface mount packages are mounted on a printed circuit board for utilization in the electronic device.

SUMMARY OF THE INVENTION

It is an object of the present invention to provide an improved electronic surface mount package.

Briefly, according to one preferred embodiment, the present invention provides a one piece construction package (with an open bottom) with one or more terminal pins molded into the package. Each of the pins have a notched post upon which a wire is wound which is from a toroid transformer carried within the package. Each of the posts are notched so that the respective wires are separated from one another so as to avoid arcing. The case is open at the bottom which prevents harm from expansion or cracking.

Other objects, features, and advantages of the present invention will become apparent from the following detailed description when taken in conjunction with the accompanying drawings.

BRIEF DESCRIPTION OF THE DRAWINGS

The accompanying drawings, which are incorporated in and form a part of this specification, illustrate embodiments of the invention and, together with the description, serve to explain the principles of the invention:

FIG. 1 shows an electronic surface mount package in three-dimensional view according to the present invention.

FIG. 2 sbows a wound toroid transformer.

FIG. 3 shows the connection of the toroid transformer of FIG. 2 within the electronic surface mount package of FIG. 1.

FIG. 4 within the electronic surface mount package of FIG. 1 after terminations have been soldered.

FIG. 5 and 6 show relationship between a safeguard (standoff) and the electronic surface-mount package's foot seating plane and inner terminal posts, respectively.

FIG. 7 shows a close-up of the pin configuration of FIG. 1 and how it is molded inside the wall of the body of the package.

FIG. 8 shows wire wrapped around the pin or post of FIG. 7.

FIGS. 9A–9D show end, top, side, and bottom views of electronic surface mount package according to the present invention.

DETAILED DESCRIPTION OF THE DRAWINGS

Reference will now be made in detail to the preferred embodiments of the invention, examples of which are illustrated in the accompanying drawings, where like numerals indicate like components. While the invention will be described in conjunction with the preferred embodiments, it will be understood that they are not intended to limit the

invention to those embodiments. On the contrary, the invention is intended to cover alternatives, modifications and equivalents, which may be included within the spirit and scope of the invention as defined by the appended claims.

FIG. 1 shows an electronic surface mount transformer package or case 10 in three-dimensional view. FIG. 1 shows a cut-away of the generally rectangular empty case 10 with pins 14 molded into the case 10, together with notched post 12 upon which a wire is wound. Typically, tin-Lead plated copper alloy terminals are molded into the wall of the package 10 with the terminals extending through and below the bottom of the wall. The outer portion of the package 10 is formed to meet specified footing requirements. The inner post 12 serves as a terminal for internal wire termination use. The package material is made of a type of thermal plastic which is in compliance with UL V-94 requirement for flammability.

FIG. 2 shows a wound toroid transformer 20 with wire 22 wrapped around the transformer 20. The toroid core is typically made of ferrite or iron material and the winding of wire 22 is done manually with fine insulated magnet wire.

FIG. 3 shows a cut-away of the molded part with the toroid 20 mounted inside and showing the wire 22 as it is then attached to post 14. The wires 22 are pulled with minimum tension and wrapped around the terminal post 14 for two to two and a half turns. This operation is done when the case has been placed bottom side up.

FIG. 4 shows a silicone compound 30 poured inside the cavity with wire terminations that have been soldered with high temperature solder (95 Ag/5Sn) 32 and the package has been properly cleaned. The case 10 is then filled with soft silicone material to protect the transformer and to meet environmental requirements.

FIGS. 5 and 6 show the relationships between the safe guard (stand off) 34 and package's foot seating plane and inner terminal posts 12*a*. FIG. 5 shows the standoff 34, in which the parts typically are placed automatically by machine onto a PC board. They are pressed down, as it is desirable to have some limitation of how far they can be pressed. It is also desirable that the post 12 does not touch the PC board, and so the end standoffs 34 do not allow that to happen.

FIG. 6 shows the distance in relationship between the end of the post 12 and where the PC board 36 is located and also where the standoff 34 ends. The PC board 36 would be at the base of the foot.

In FIG. 6, the typical clearance of 0.015 inches from the safe guard 34 to the seating plane is to avoid interference to the coplanarity of the package. There is also a gap between the safe guard 34 and terminal post 12 to prevent the solder joints from touching the circuit board due to an over forced pick and place operation.

Inside the package 10, there may be two, three, or more individual toroidal transformers. Wires coming off of the transformers are connected to the outside world. For example, the pins may be mounted on a printed circuit board in an electronic device. The lead frame pins are injection molded and the shape of the post upon which the wire is wound from the toroidal transformer is notched. This allows for the wires to be separated from pin to pin, and for soldering to be much more efficient.

FIG. 7 shows a closeup of the pin 12 and how pin 12 is molded inside the wall of the body and also the notch effect 40 of the pin 12. The post 14 is notched so that the wires are kept away from one another (post to post) which is very desirable. The separation is desirable so as to avoid arcing.

FIG. 8 shows the wire 22 wrapped around the pin or post 12.

FIGS. 9A–9D show end, top, side, and bottom views, respectively, of the electronic surface mount package 10. The embodiment shown in FIGS. 9A–9D provide an industrial standard surface mount footprint and package dimensions which are auto pick and placeable. In addition, special design consideration has been applied to thermal expansion of materials to ensure that the package will stand all normal reflow processes with low cost, easy manufacturing, and high reliability.

In the industry, many manufacturers have used a two-piece construction, a base and a cover, and the case is backfilled with epoxy. In some processes, the coefficients of expansion of the epoxy that has been backfilled, plus the toroid itself, tend to cause the two pieces to separate. The base separates from the top, and as a result, it can end up cracking. The present invention provides a one-piece construction (an open bottom) only with the silicone filling to protect the toroid. The case is open at the bottom, thus allowing for nothing to expand or crack.

The foregoing descriptions of specific embodiments of the present invention have been presented for purposes of illustration and description. They are not intended to be exhaustive or to limit the invention to the precise forms disclosed, and it should be understood that many modifications and variations are possible in light of the above teaching. The embodiments were chosen and described in order to best explain the principles of the invention and its practical application, to thereby enable others skilled in the art to best utilize the invention and various embodiments with various modifications as are suited to the particular use contemplated. It is intended that the scope of the invention be defined by the Claims appended hereto and their equivalents.

We claim:

1. An electronic surface mount package comprising:

a one piece construction package having a side wall and an open bottom,

a plurality of toroid transformers carried within said package by a soft silicone material, said toroid transformers each having wires wrapped thereon,

a plurality of terminal pins molded within and extending from the bottom of said package, each of the said pins extending through a bottom of said side wall and having a notched post upon which said wires from said transformers are wrapped and soldered thereon, respectively.

2. An electronic surface mount package comprising:

a construction package having a side wall and an open bottom,

a plurality of toroid transformers carried within said package by a soft silicone material, said toroid transformers each having wires wrapped thereon,

a plurality of terminal pins molded within and extending from the bottom of said package, each of said pins extending through a bottom of said side wall and having a notched post upon which said wires from said transformers are wrapped and soldered thereon, respectively.

3. A package as in claim 2 wherein said construction package is one piece.

4. The package of claim 3 wherein said construction package has an open bottom.

5. The package of claim 4 wherein said posts are separated from one another so as to avoid arcing.

6. An electronic surface mount package for mounting on a printed circuit board in an electronic device, said electronic surface mount package comprising:

a one piece construction package having a side wall and an open bottom,

a plurality of toroid transformers carried within said package by a soft silicone material, said toroid transformers each having wires wrapped thereon,

a plurality of terminal pins molded within and extending from the bottom of said package, each of said pins extending through a bottom of said side wall and having a notched post upon which said wires from said transformers are wrapped and soldered thereon, respectively.

7. The package as in claim 6 further including a standoff for maintaining a distance between the bottom of said pins and said printed circuit board.

8. An electronic surface mount package comprising:

a construction package having a side wall and an open bottom,

at least one toroid transformer carried within said package by a soft silicone material, said toroid transformer having a wire wrapped thereon,

at least one terminal pin molded within and extending from the bottom of said package, said pin extending through a bottom of said side wall and having a notched post upon which said wire from said transformer is wrapped and soldered thereon.

* * * * *

UNITED STATES PATENT AND TRADEMARK OFFICE
CERTIFICATE OF CORRECTION

PATENT NO : 5,656,985
DATED : August 12, 1997
INVENTOR(S): Lu et al.

It is certified that error appears in the above-identified patent and that said Letters Patent is hereby corrected as shown below:

On the title page item [75] Inventors,

Please delete "Peter Loh Hong Pao" and replace with -- Peter Loh Hang Pao --.

Please delete "Robert Lake Hang Lam" and replace with -- Robert Loke Hang Lam --.

Signed and Sealed this

Twenty-third Day of December, 1997

Bruce Lehman

Attest:

BRUCE LEHMAN

Attesting Officer

Commissioner of Patents and Trademarks

EXHIBIT B

US006297720B1

(12) **United States Patent**
Lu et al.

(10) **Patent No.: US 6,297,720 B1**
(45) **Date of Patent: *Oct. 2, 2001**

(54) **ELECTRONIC SURFACE MOUNT PACKAGE**

(75) Inventors: **Peter Lu**, Flower Mound, TX (US); **Jeffrey Heaton**, Cupertino; **James W. Heaton**, Los Altos, both of CA (US); **Tsang Kei Sun**, Kowloon (HK); **Peter Loh Hang Pao**, Kowloon (HK); **Robert Loke Hang Lam**, Kowloon (HK)

(73) Assignee: **Halo Electronics, Inc.**, Redwood City, CA (US)

(*) Notice: This patent issued on a continued prosecution application filed under 37 CFR 1.53(d), and is subject to the twenty year patent term provisions of 35 U.S.C. 154(a)(2).

Subject to any disclaimer, the term of this patent is extended or adjusted under 35 U.S.C. 154(b) by 0 days.

This patent is subject to a terminal disclaimer.

(21) Appl. No.: **08/773,555**

(22) Filed: **Dec. 27, 1996**

Related U.S. Application Data

(63) Continuation-in-part of application No. 08/513,573, filed on Aug. 10, 1995, now Pat. No. 5,656,985.

(51) **Int. Cl.**[7] **H01F 27/02**; H01F 27/209

(52) **U.S. Cl.** **336/96**; 336/192; 336/229; 336/90

(58) **Field of Search** 336/229, 192, 336/65, 90, 96; 174/52.4; 361/821

(56) **References Cited**

U.S. PATENT DOCUMENTS

3,721,747 *	3/1973	Renskers	336/96
4,205,291	5/1980	Flentge	336/92
5,034,854	7/1991	Matsumura et al.	361/396
5,307,041	4/1994	Kato et al.	336/83

FOREIGN PATENT DOCUMENTS

0 490 438 A1	6/1992	(EP)	H01F/31/00
38-20060	9/1963	(JP)	336/229
5-275253	10/1993	(JP)	336/229

OTHER PUBLICATIONS

McCormick; Surface Mount Transformers: A New Packaging Approach; Surface Mount Technology; Feb. 1993; pp. 27–31.

Wyns et al.; PSPICE Simulations and 3D–PCB Transformers for ZVS Full Bridge Converters; The European Power Electronics Association; 1993; pp. 208–214.

EPE'93 Fifth European Conference; Power Electronics and Applications; vol. 3: Electronic Power Supply System; Sep. 13–16, 1993; pp. 215.

Davis; SMT Passive Components Fit Power Electronics Applications; PCIM; Jun. 1993; vol. 19; No. 6; pp. 20–28 and 90.

(List continued on next page.)

Primary Examiner—Anh Mai
(74) *Attorney, Agent, or Firm*—Trial & Technology Law Group

(57) **ABSTRACT**

An electronic surface mount package provides a one piece construction package (with an open bottom) with one or more terminal pins molded into the package. Each of the pins have a notched post upon which a wire is wound which is from a toroid transformer carried within the package. Each of the posts are notched so their respective wires are separate from one another so as to prevent arcing. The case is opened at the bottom which prevents harm from expansion or cracking. A reinforcement beam is located laterally across the bottom of the package to provide mechanical strength for the case.

8 Claims, 6 Drawing Sheets

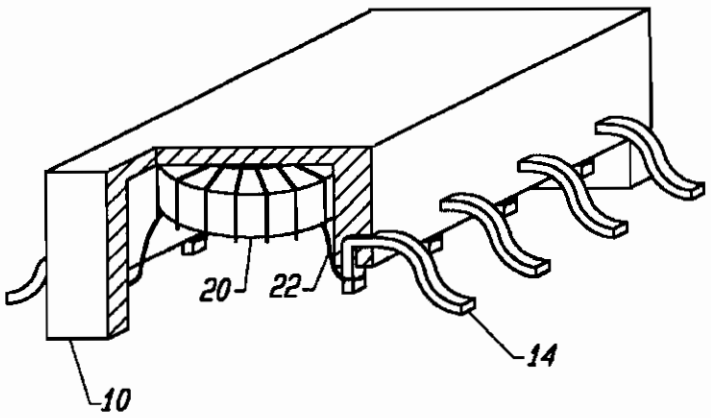

OTHER PUBLICATIONS

Osawa; A Superminiaturized Double–Balanced SMT Mixer–Modulator; Microwave Journal; Feb. 1994; pp. 90–97.

Lyons et al.; Printed Circuit Board Magnetics: A New Approach to the Mass Production of Toroidal Transformers; ISHM '95 Proceedings; pp. 53–58.

Derebail et al.; Knowledge Based Adhesive Selection for SMT Assemblies; Proceedings 1995 International Symposium on Microelectronics; Oct. 24–26, 1995; vol. 2649; pp. 1024–1035.

* cited by examiner

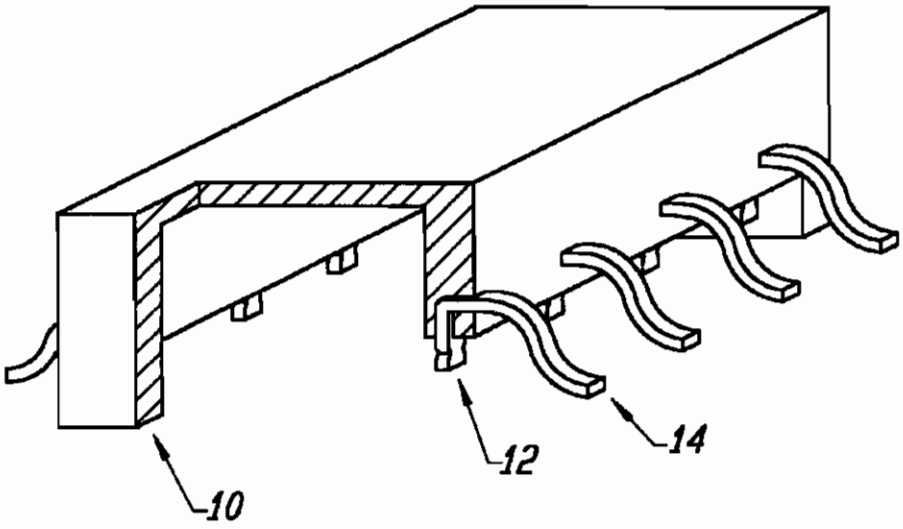

FIG. 1

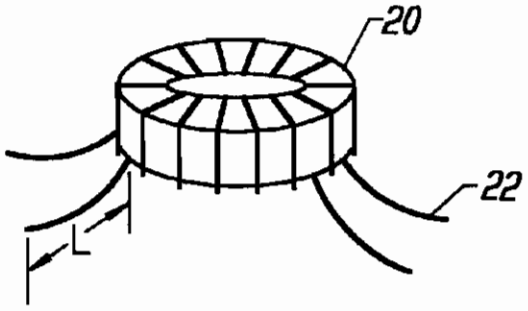

FIG. 2

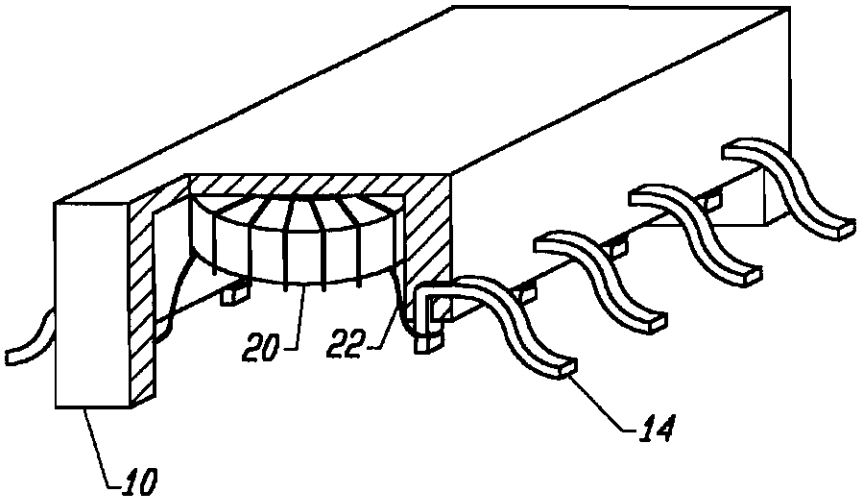

FIG. 3

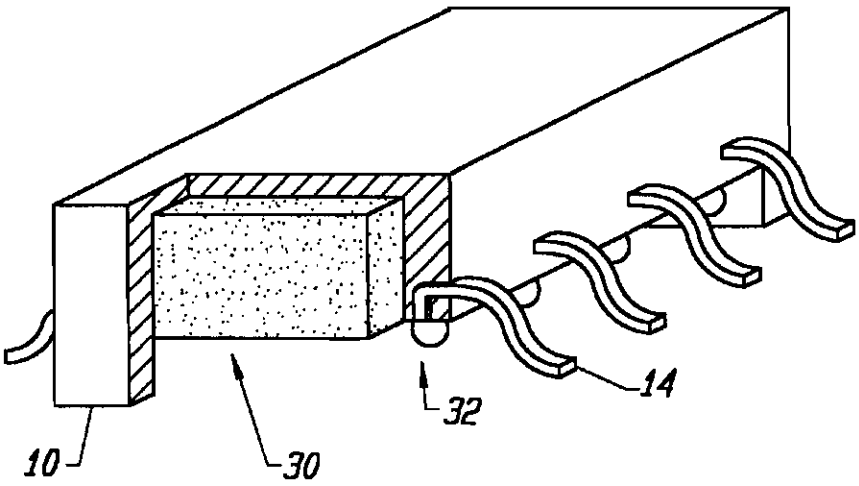

FIG. 4

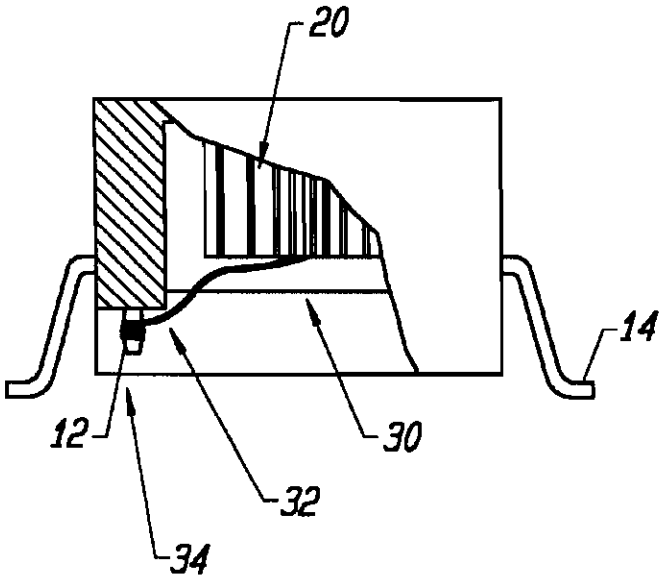

FIG.5

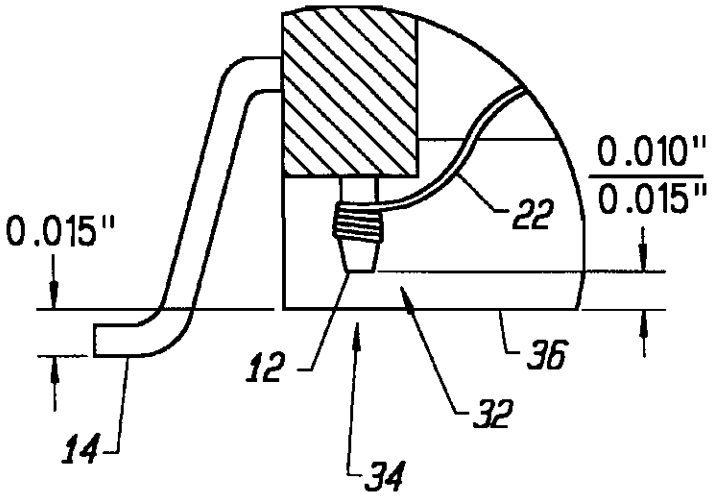

FIG.6

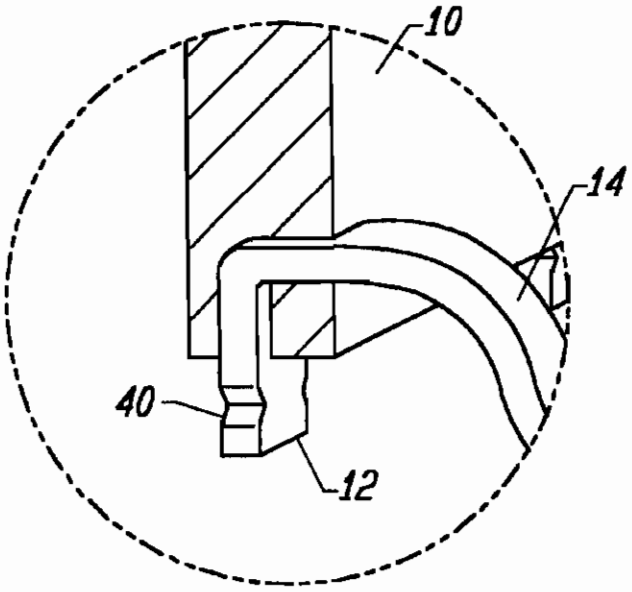

FIG. 7

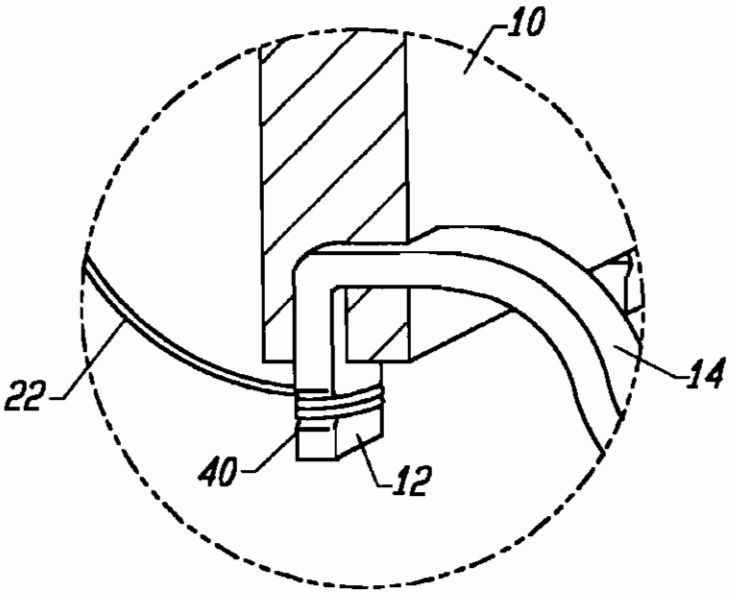

FIG. 8

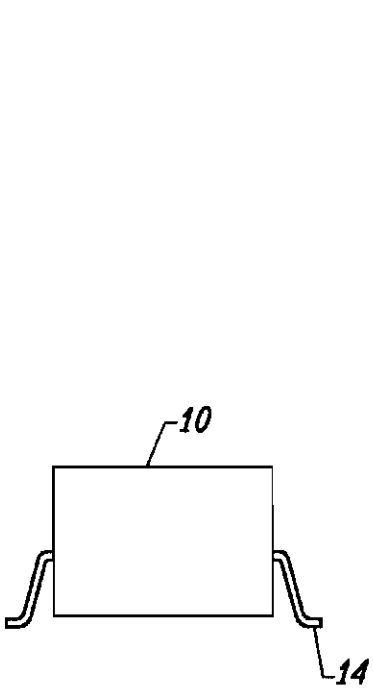

FIG. 9A

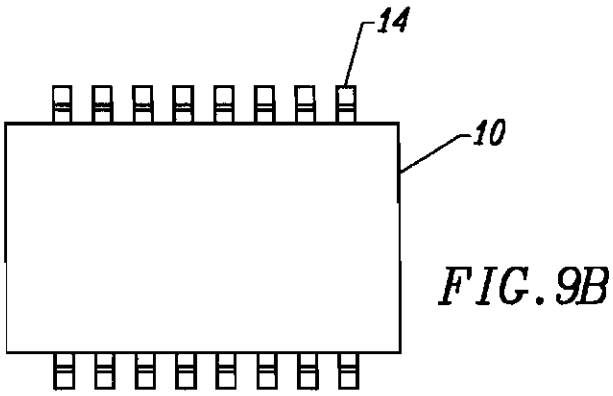

FIG. 9B

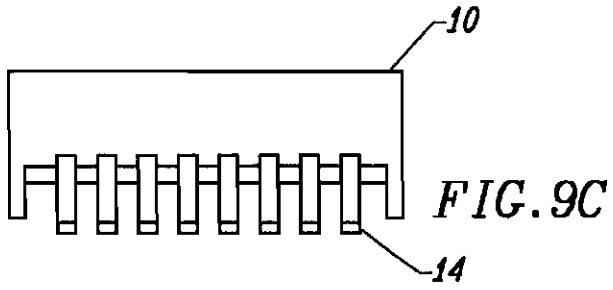

FIG. 9C

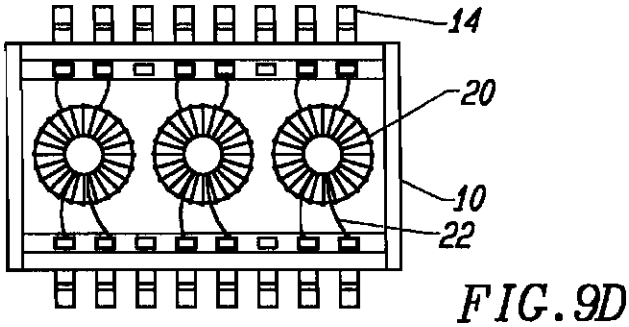

FIG. 9D

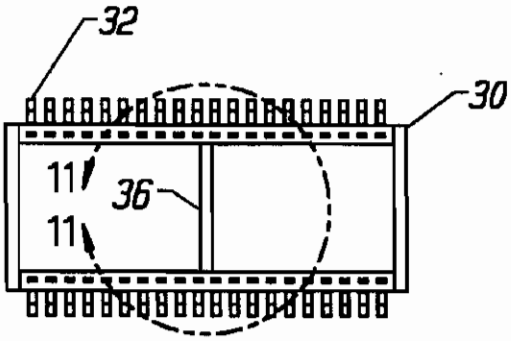

FIG. 10

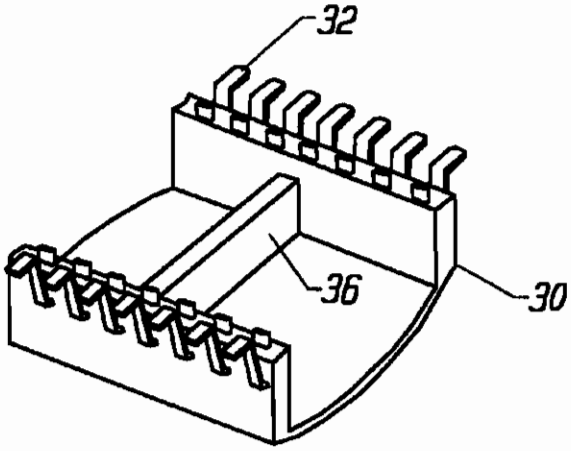

FIG. 11

ELECTRONIC SURFACE MOUNT PACKAGE

CROSS REFERENCE TO RELATED APPLICATIONS

The present application is a continuation-in-part of application entitled ELECTRONIC SURFACE MOUNT PACKAGE, Ser. No. 08/513,573, filed Aug. 10, 1995 now U.S. Pat. No. 5,656,985, issued Aug. 12, 1997 and assigned to the same Assignee as the present application.

BACKGROUND OF THE INVENTION

The present invention relates to an electronic surface mount package or case. Electronic surface mount packages are utilized in applications in which one or more individual toroid transformers are embodied within the surface mount package.

Wires coming off the transformers are electronically tied to pins on the package for connection to an electronic device. Typically, the electronic surface mount packages are mounted on a printed circuit board for utilization in the electronic device.

It is widely known in the local area magnetic industry that when surface mount toroidal magnetics which are encapsulated in hard plastics go through infra-red soldering processes, the magnetic components (ferrite) can expand significantly. When using a hard epoxy type material, it has been found that the magnetic component expansion can often cause cracking of the package or case, which makes the part unusable. In view of the foregoing, it would be highly desirable to provide an improved electronic surface mount package which avoids the cracking and expansion problems described above.

SUMMARY OF THE INVENTION

It is an object of the present invention to provide an improved electronic surface mount package.

Briefly, according to one preferred embodiment, the present invention provides a one piece construction package (with an open bottom) with one or more terminal pins molded into the package. Each of the pins have a notched post upon which a wire is wound and soldered. The wire which is wound and soldered around each terminal pin/post is from a respective toroid transformer carried within the package. Each of the posts are notched so that the respective wires are separated from one another so as to avoid arcing. The case is open at the bottom which prevents cracking and allows for the toroidal expansion. The present invention also includes a reinforcement beam that is disposed laterally or sidewise across the bottom of the package to provide extra support in the mechanical strength of the case.

Other objects, features, and advantages of the present invention will become apparent from the following detailed description when taken in conjunction with the accompanying drawings.

BRIEF DESCRIPTION OF THE DRAWINGS

The accompanying drawings, which are incorporated in and form a part of this specification, illustrate embodiments of the invention and, together with the description, serve to explain the principles of the invention:

FIG. **1** shows an electronic surface mount package in three-dimensional view according to the present invention.

FIG. **2** shows a wound toroid transformer.

FIG. **3** shows the connection of the toroid transformer of FIG. **2** within the electronic surface mount package of FIG. **1**.

FIG. **4** shows the electronic surface mount package of FIG. **1** after wire terminations have been soldered.

FIG. **5** and **6** show relationships between a safeguard (standoff) and the electronic surface-mount package's foot seating plane and inner terminal posts, respectively.

FIG. **7** shows a close-up of the pin configuration of FIG. **1** and how it is molded inside the wall of the body of the package.

FIG. **8** shows wire wrapped around the pin or post of FIG. **7**.

FIGS. **9A–9D** show end, top, side, and bottom views of electronic surface mount package according to the present invention.

FIG. **10** shows a bottom view of a **40** pin package according to the present invention.

FIG. **11** shows an enlarged sectional view of FIG. **10** illustrating a reinforcement beam.

DETAILED DESCRIPTION OF THE DRAWINGS

Reference will now be made in detail to the preferred embodiments of the invention, examples of which are illustrated in the accompanying drawings, where like numerals indicate like components. While the invention will be described in conjunction with the preferred embodiments, it will be understood that they are not intended to limit the invention to those embodiments. On the contrary, the invention is intended to cover alternatives, modifications and equivalents, which may be included within the spirit and scope of the invention as defined by the appended claims.

As will be described in more detail below, the present invention is directed toward applications for packages mounted on a printed circuit board in an electronic device, which requires very low current and voltages, and is for DC voltages only. The present invention provides for a low power application in which the package includes one or more toroidal transformers which are carried or supported by a soft silicone material within an open construction package and which utilizes a portion of the case as a standoff to ensure that the pin-posts do not touch a PCB when mounted by a user.

As described above, it is known that when the parts go through an infra-red soldering process, the magnetic components (ferrite toroids) can expand significantly. When using a hard epoxy type material, it has been found that the magnetic component expansion can often cause cracking of the package or case, which is highly undesirable. The present invention solves this problem by providing an open design within which is placed a soft silicone material which allows for expansion during the soldering process, rather than trying to contain the components within a closed case or package. Hence, with the open construction, the present invention has no bottom at all. In addition, the magnetic components are not mounted on anything but rather are encapsulated or supported ("carried by a soft silicone material"). The wires from the toroids are wound around and soldered to the pin-posts. This construction solves the cracking and expansion problems described above, as will now be described in conjunction with FIGS. **1–11**.

FIG. **1** shows an electronic surface mount transformer package or case **10** in three-dimensional view. FIG. **1** shows a cut-away of the empty case **10** with pins **14** molded into the case **10**, together a the notched post **12** upon which a wire is wound. Post **12** has an hour-glass shape which facilitates the winding of wire around post **12**, as will be described. Typically, tin-lead plated copper alloy terminals

are molded into the wall of the package **10**. The outer portion of the package **10** is formed to meet specified footing requirements. The inner post **12** serves as a terminal for internal wire termination use. The package material is made of type of thermal plastic which is in compliance with UL V-94 requirement for flammability.

FIG. **2** shows a wound toroid transformer **20** with wire **22** wrapped around the transformer **20**. The toroid core is typically made of ferrite material and the winding of wire **22** is done manually with fine insulated magnet wire.

FIG. **3** shows a cut-away of the molded part with the toroid **20** mounted inside and showing the wire **22** as it is then attached to post **14**. The wires **22** are pulled with minimum tension and wrapped around the terminal post **14** for two to two and a half turns. This operation is done when the case has been placed bottom side up.

FIG. **4** shows a silicone compound **30** poured inside the cavity with wire terminations that have been soldered with high temperature solder (95 Ag/5Sn) **32** and the package has been properly cleaned. The case **10** is then filled with soft silicone material (preferably a soft epoxy type material) to protect the transformer and to meet environmental requirements.

FIGS. **5** and **6** show the relationships between the safe guard (stand off) **34** and package's foot seating plane and inner terminal posts **12***a*. FIG. **5** shows the standoff **34**, in which the parts typically are placed automatically by machine onto a PC board. They are pressed down, as it is desirable to have some limitation of how far they can be pressed. It is also desirable that the post **12** does not touch the PC board, and so the end standoffs **34** do not allow that to happen. In a preferred embodiment, post **12** is oriented substantially perpendicular to, but does not touch, PC board.

FIG. **6** shows the distance in relationship between the end of the post **12** and where the PC board **36** is located and also where the standoff **34** ends. The PC board **36** would be at the base of the foot.

In FIG. **6**, the typical clearance of 0.015 inches from the safe guard **34** to the seating plane is to avoid interference to the coplanarity of the package. There is also a gap between the safe guard **34** and terminal post **12** to prevent the solder joints from touching the circuit board due to an over forced pick and place operation.

Inside the package **10**, there may be two, three, or more individual toroidal transformers. Wires coming off of the transformers are connected to the outside world. For example, the pins may be mounted on a printed circuit board in an electronic device. The leaf frame pins are injection molded into the body and which allows for an exposed notched post upon which the wire is wound from the toroidal transformer. This allows for the wires to be separated from pin to pin, and for soldering to be much more efficient.

FIG. **7** shows a closeup of the hour-glass shaped pin **12** and how pin **12** is molded inside the wall of the body and also the notch effect **40** of the pin **12**. The post **14** is notched so that the wires are kept away from another, post to post, which is very desirable. The separation is desirable so as to avoid arcing.

FIG. **8** shows the wire **22** wrapped around the pin or post **12**.

FIGS. **9**A–**9**D show end, top, side, and bottom views, respectively, of the electronic surface mount package **10**. The embodiment shown in FIGS. **9**A–**9**D provide an industrial standard surface mount footprint and package dimensions which are auto pick and placeable. In addition, special

design consideration has been applied to thermal expansion of materials to ensure that the package will stand all normal re-flow processes with low cost, easy manufacturing, and high reliability.

In the industry, most manufacturers have used a two-piece construction, a base and a cover, and the case is backfilled with hard epoxy. In some processes, the coefficients of expansion of the epoxy that has been backfilled tends to cause the two pieces to separate. The base separates from the top, and as a result, can end up cracking. The present invention provides a one-piece open construction (an open bottom) only with the soft silicone filling to protect the toroid. The case is open at the bottom, thus allowing the toroids to expand naturally without cracking the body of the part.

FIG. **10** shows a bottom view of a **40** pin package **30** which includes pins **32** which includes a reinforcement beam **36** laterally disposed across the bottom of the case or package **30** reinforcement beam **36** provides extra support for improving the mechanical strength of the package **30**.

FIG. **11** shows an enlarged sectional view of the package **30** of FIG. **10** in which the reinforcement beam **36** is disposed laterally or sidewise across the bottom of the package or case **30**. The **40** pin surface mount package shown in FIGS. **10** and **11** include the reinforcement beam **36** which provides extra support to the mechanical strength of the package **30**. This provides for an improved mechanically stable package **30** which when undergoing an IR (infrared) re-flow process and also maintain the coplanarity of the leads or pins **32** shown in FIG. **11**.

Although FIG. **11** shows one reinforcement beam **36** laterally disposed across the bottom of the case or package **30**, it would be apparent to one of ordinary skill in the art that additional reinforcement beams can he located on the bottom of the case or package **30** as the situation warrants.

It should become apparent that various desirable features of the present invention have been shown and described. In the present invention, the pin termination is not flush mounted but rather extends from the bottom of the package. Further, the termination is wound and soldered to the extended pin-post assembly, as shown in FIGS. **1** and **3**–**8**. The use of a soft silicone material (such as soft epoxy) to carry the toroid transformers within the case or package acts to encapsulate or support the toroid transformer within the case or package.

The present invention is directed toward applications for packages mounted on a printed circuit board in an electronic device, which requires very low current and voltages, and is for DC voltages only. The present invention provides for a low power application in which the package includes one or more toroidal transformers which are carried or supported by a soft silicone material within an open construction package and which utilizes a portion of the case as a standoff to ensure that the pin-posts do not touch a PCB when mounted hy a user.

It is widely known that when the toroidal magnetics are mounted in hard plastic packages, the infra-red soldering processes cause the magnetic components (ferrite) to expand significantly. When using a hard epoxy type material, it has been found that the magnetic component expansion can often cause cracking of the package or case, which is highly undesirable. The present invention solves this problem by providing an open design within which is placed a soft silicone material which allows for expansion during the soldering process, rather than contain the components within a closed case or package. Hence, with the open construction,

the present invention has no bottom at all. In addition, the magnetic components are not mounted on anything but rather are encapsulated or supported ("carried by a soft silicone material") such that when the wires are wound around and soldered to the pin-posts, the cracking and expansion problems described above are avoided.

The foregoing descriptions of specific embodiments of the present invention have been presented for purposes of illustration and description. They are not intended to be exhaustive or to limit the invention to the precise forms disclosed, and it should be understood that many modifications and variations are possible in light of the above teaching. The embodiments were chosen and described in order to best explain the principles of the invention and its practical application, to thereby enable others skilled in the art to best utilize the invention and various embodiments with various modifications as are suited to the particular use contemplated. It is intended that the scope of the invention be defined by the claims appended hereto and their equivalents.

What is claimed is:

1. An electronic surface mount package for mounting onto the surface of a printed circuit board in an electronic device, said package comprising:

a one piece open construction package having a side wall,

a plurality of toroid transformers within said package, said toroid transformers each having wires wound thereon,

a plurality of terminal pins molded within the side wall of said package, the ends of the terminal pins forming solder posts and extending through and below the bottom of said side wall,

said solder posts each having an hour-glass shaped notch upon which said wires from said transformers are wrapped and soldered thereon, respectively,

the other end of each of the terminal pins extending in gull wing fashion outwardly from the side wall and below the bottom of the package for mounting onto the surface of the printed circuit board.

2. An electronic surface mount package for mounting onto the surface of a printed circuit board comprising:

a one piece open construction package having a side wall,

a plurality of toroid transformers within said package in a soft silicone material, said toroid transformers each having wires wound thereon,

a plurality of terminal pins molded within the side wall of said package, the ends of the terminal pins forming solder posts extending through and below the bottom of said side wall, said solder posts each having a notched post upon which said wires from said transformers are wrapped and soldered thereon, respectively,

the other end of each of the terminal pins extending outwardly from the side wall and below the bottom of the package for mounting onto the surface of the printed circuit board.

3. An electronic surface mount package for mounting onto the surface of a printed circuit board comprising:

a construction package having a side wall and an open bottom,

a plurality of toroid transformers within said package in a soft silicone material, said toroid transformers each having wires wound thereon,

a plurality of terminal pins molded within the side wall of said package, the ends of the pins forming solder posts extending through and below the bottom of said side wall, said solder posts each having a notched post upon which said wires from said transformers are wrapped and soldered thereon, respectively.

4. An electronic surface mount package for mounting onto the surface of a printed circuit board in an electronic device, said electronic surface mount package comprising:

a one piece open construction package having a side wall,

a plurality of toroid transformers within said package in a soft silicone material, said toroid transformers each having wires wound thereon,

a plurality of terminal pins molded within the side wall of said package, the ends molded pins forming solder posts extending through and below the bottom of said side wall, said solder posts each having a notched post upon which said wires from said transformers are wrapped and soldered thereon, respectively.

5. The package as in claim 4 further including a standoff for maintaining a distance between the bottom of said pins and said printed circuit board.

6. An electronic surface mount package for mounting onto the surface of a printed circuit board comprising:

an open construction package having a side wall,

at least one toroid transformer within said package in a soft silicone material, said toroid transformer having a wire wound thereon,

at least one terminal pin molded within the side wall of said package, said one end forming a solder post extending through and below the bottom of said side wall said solder post having a notched post upon which said wire from said transformer is wrapped and soldered thereon.

7. The package as in claim 6 wherein the package includes an end wall to form a safe guard and wherein said one end of said terminal pin extends below the bottom of the side wall but does not extend below the safe guard.

8. The package as in claim 7 wherein the terminal pin has another end which extends in wing like fashion through the other side of the side wall below the bottom of the package to form a surface mounting portion for mounting on the surface of the printed circuit board.

* * * * *

EXHIBIT C

US006297721B1

(12) **United States Patent**
Lu et al.

(10) **Patent No.: US 6,297,721 B1**
(45) **Date of Patent: *Oct. 2, 2001**

(54) **ELECTRONIC SURFACE MOUNT PACKAGE**

(75) Inventors: **Peter Lu**, Flower Mound, TX (US); **Jeffrey Heaton**, Cupertino; **James W. Heaton**, Los Altos, both of CA (US); **Tsang Kei Sun**, Kowloon (HK); **Peter Loh Hang Pao**, Kowloon (HK); **Robert Loke Hang Lam**, Kowloon (HK)

(73) Assignee: **Halo Electronics, Inc.**, Redwood City, CA (US)

(*) Notice: This patent issued on a continued prosecution application filed under 37 CFR 1.53(d), and is subject to the twenty year patent term provisions of 35 U.S.C. 154(a)(2).

Subject to any disclaimer, the term of this patent is extended or adjusted under 35 U.S.C. 154(b) by 0 days.

(21) Appl. No.: **08/977,407**

(22) Filed: **Nov. 24, 1997**

Related U.S. Application Data

(60) Division of application No. 08/773,555, filed on Dec. 27, 1996, which is a continuation-in-part of application No. 08/513,573, filed on Aug. 10, 1995, now Pat. No. 5,656,985.

(51) **Int. Cl.**[7] **H01F 27/02**; H01F 27/28

(52) **U.S. Cl.** **336/96**; 336/192; 336/229; 336/65; 361/821

(58) **Field of Search** 174/52.4, 50; 361/821, 361/752; 336/192, 229, 65, 96, 90

(56) **References Cited**

U.S. PATENT DOCUMENTS

2,924,639	*	2/1960	Zelt	174/50
3,721,747		3/1973	Renskers	174/52 PE
5,034,854	*	7/1991	Matsumura et al.	336/192
5,545,841	*	8/1996	Wilfinger et al.	174/50

FOREIGN PATENT DOCUMENTS

0 490 438 A1 6/1992 (EP) H01F/31/00

OTHER PUBLICATIONS

McCormick; Surface Mount Transformers: A New Packaging Approach; Surface Mount Technology; Feb. 1993; pp. 27–31.

Wyns et al.; PSPICE Simulations and 3D–PCB Transformers for ZVS Full Bridge Converters; The European Power Electronics Association; 1993; pp. 208–214.

EPE'93 Fifth European Conference; Power Electronics and Applications; vol. 3: Electronic Power Supply System; Sep. 13–16, 1993; pp. 215.

Davis; SMT Passive Components Fit Power Electronics Applications; PCIM; Jun. 1993; vol. 19; No. 6; pp. 20–28 and 90.

Osawa; A Superminiaturized Double–Balanced SMT Mixer–Modulator; Microwave Journal; Feb. 1994; pp. 90–97.

Lyons et al.; Printed Circuit Board Magnetics: A New Approach to the Mass Production of Toroidal Transformers; ISHM '95 Proceedings; pp. 53–58.

Derebail et al.; Knowledge Based Adhesive Selection for SMT Assemblies; Proceedings 1995 International Symposium on Microelectronics; Oct. 24–26, 1995; vol. 2649; pp. 1024–1035.

* cited by examiner

Primary Examiner—Anh Mai
(74) *Attorney, Agent, or Firm*—Trial & Technology Law Group

(57) **ABSTRACT**

An electronic surface mount package provides a one piece construction package (with an open bottom) with one or more terminal pins molded into the package. Each of the pins have a notched post upon which a wire is wound which is from a toroid transformer carried within the package. Each of the posts are notched so their respective wires are separate from one another so as to prevent arcing. The case is opened at the bottom which prevents harm from expansion or cracking. A reinforcement beam is located laterally across the bottom of the package to provide mechanical strength for the case.

7 Claims, 6 Drawing Sheets

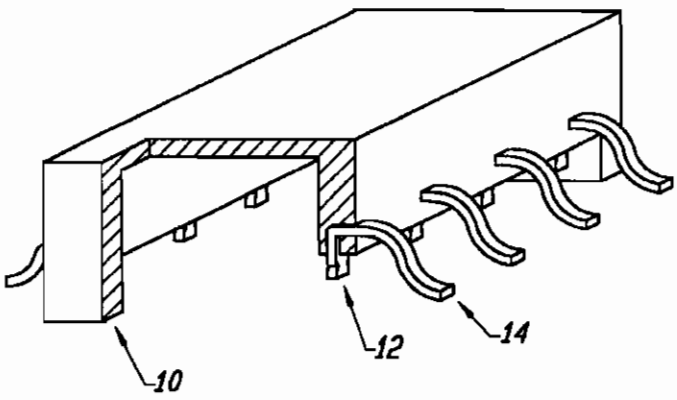

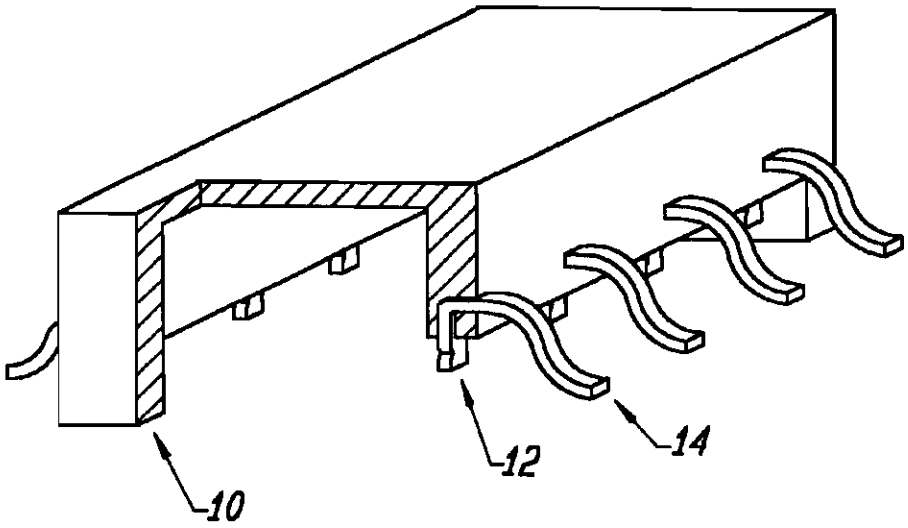

FIG. 1

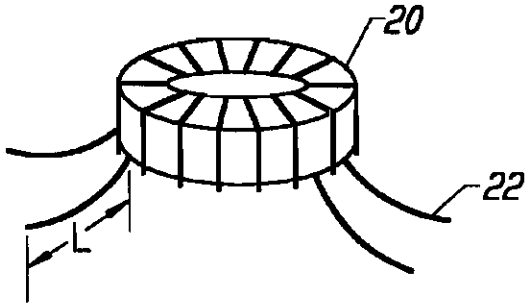

FIG. 2

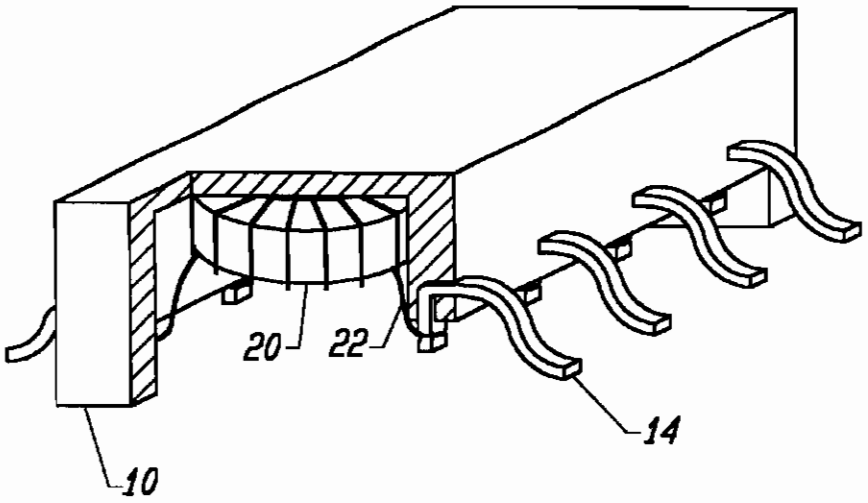

FIG. 3

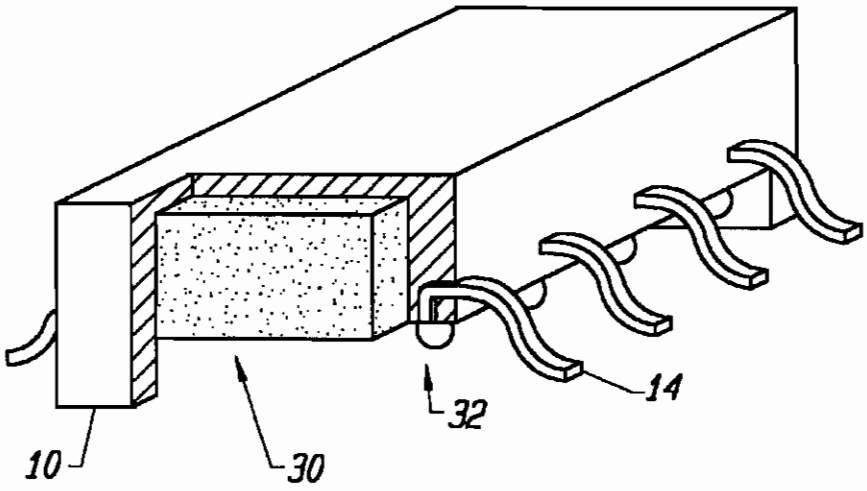

FIG. 4

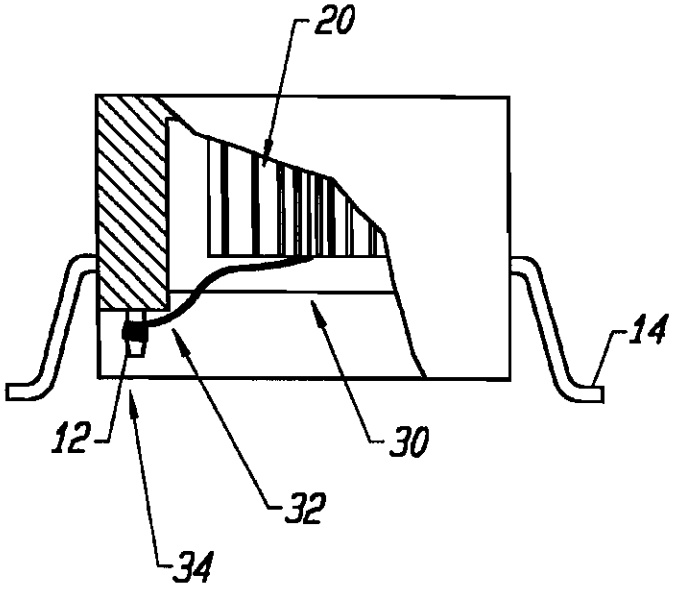

FIG. 5

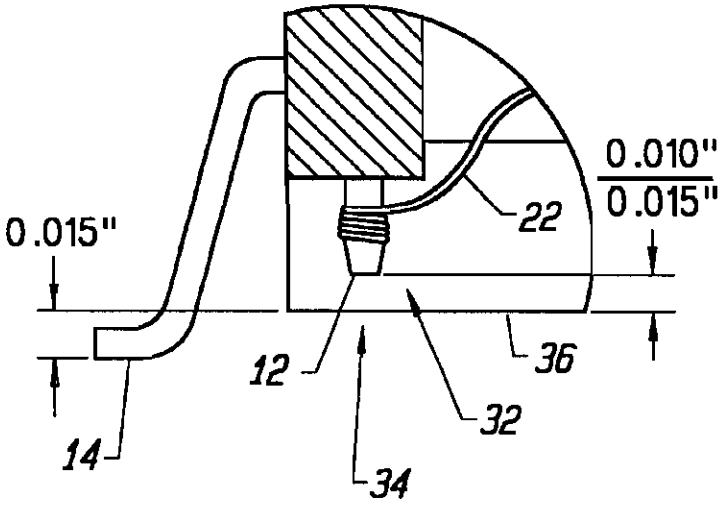

FIG. 6

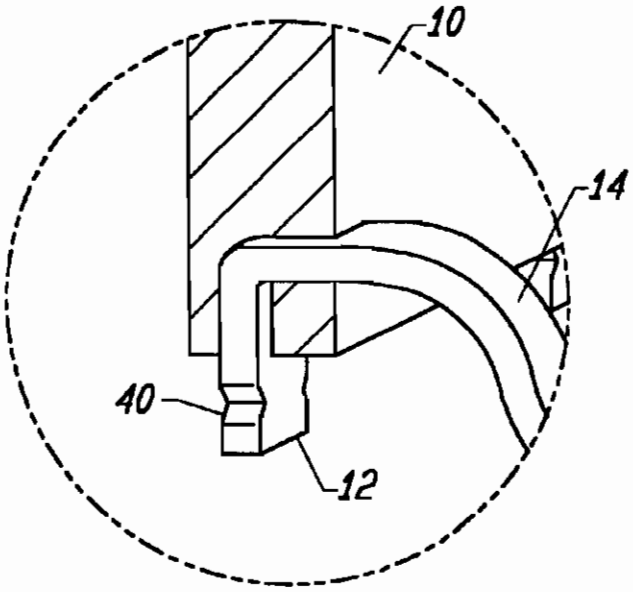

FIG.7

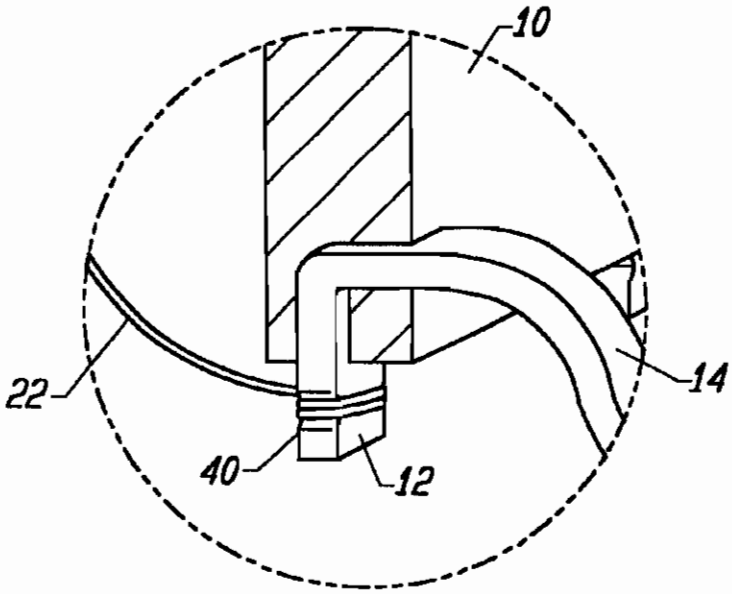

FIG.8

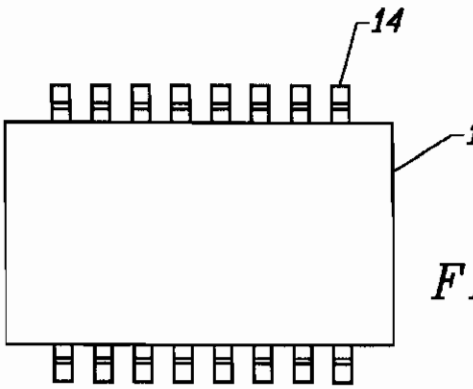

FIG. 9B

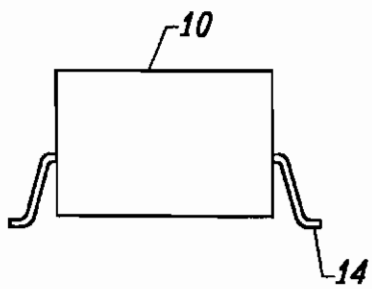

FIG. 9A

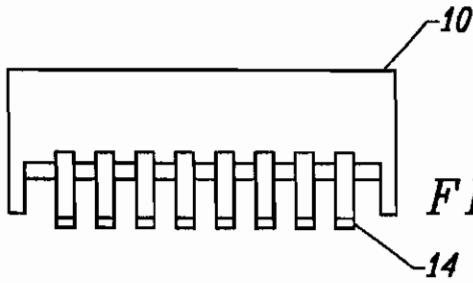

FIG. 9C

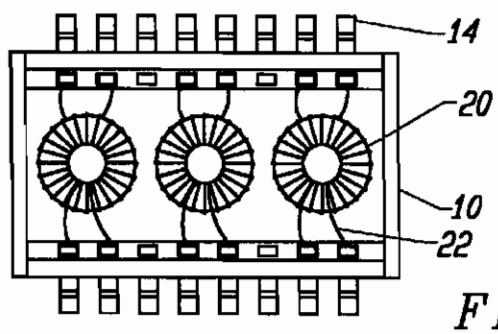

FIG. 9D

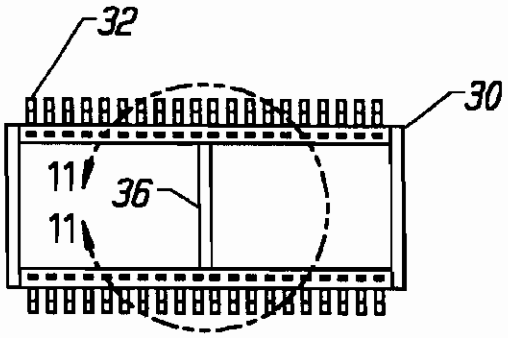

FIG. 10

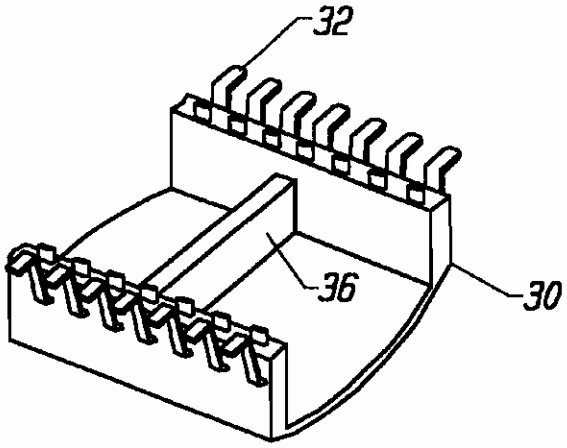

FIG. 11

ELECTRONIC SURFACE MOUNT PACKAGE

CROSS REFERENCE TO RELATED APPLICATIONS

This is a divisional of pending application Ser. No. 08/773,555 filed on Dec. 27, 1996 which is a continuation-in-part of prior application Ser. No. 08/513,573 filed on Aug. 10, 1995, now U.S. Pat. No. 5,656,985.

BACKGROUND OF THE INVENTION

The present invention relates to an electronic surface mount package or case. Electronic surface mount packages are utilized in applications in which one or more individual toroid transformers are embodied within the surface mount package.

Wires coming off the transformers are electronically tied to pins on the package for connection to an electronic device. Typically, the electronic surface mount packages are mounted on a printed circuit board for utilization in the electronic device.

It is widely known in the local area magnetic industry that when surface mount toroidal magnetics which are encapsulated in hard plastics go through infra-red soldering processes, the magnetic components (ferrite) can expand significantly. When using a hard epoxy type material, it has been found that the magnetic component expansion can often cause cracking of the package or case, which makes the part unusable. In view of the foregoing, it would be highly desirable to provide an improved electronic surface mount package which avoids the cracking and expansion problems described above.

SUMMARY OF THE INVENTION

It is an object of the present invention to provide an improved electronic surface mount package.

Briefly, according to one preferred embodiment, the present invention provides a one piece construction package (with an open bottom) with one or more terminal pins molded into the package. Each of the pins have a notched post upon which a wire is wound and soldered. The wire which is wound and soldered around each terminal pin/post is from a respective toroid transformer carried within the package. Each of the posts are notched so that the respective wires are separated from one another so as to avoid arcing. The case is open at the bottom which prevents cracking and allows for the toroidal expansion. The present invention also includes a reinforcement beam that is disposed laterally or sidewise across the bottom of the package to provide extra support in the mechanical strength of the case.

Other objects, features, and advantages of the present invention will become apparent from the following detailed description when taken in conjunction with the accompanying drawings.

BRIEF DESCRIPTION OF THE DRAWINGS

The accompanying drawings, which are incorporated in and form a part of this specification, illustrate embodiments of the invention and, together with the description, serve to explain the. principles of the invention:

FIG. **1** shows an electronic surface mount package in three-dimensional view according to the present invention.

FIG. **2** shows a wound toroid transformer.

FIG. **3** shows the connection of the toroid transformer of FIG. **2** within the electronic surface mount package of FIG. **1**.

FIG. **4** shows the electronic surface mount package of FIG. **1** after wire terminations have been soldered.

FIGS. **5** and **6** show relationships between a safeguard (standoff) and the electronic surface-mount package's foot seating plane and inner terminal posts, respectively.

FIG. **7** shows a close-up of the pin configuration of FIG. **1** and how it is molded inside the wall of the body of the package.

FIG. **8** shows wire wrapped around the pin or post of FIG. **7**.

FIGS. **9A–9D** show end, top, side, and bottom views of electronic surface mount package according to the present invention.

FIG. **10** shows a bottom view of a 40 pin package according to the present invention.

FIG. **11** shows an enlarged sectional view of FIG. **10** illustrating a reinforcement beam.

DETAILED DESCRIPTION OF THE DRAWINGS

Reference will now be made in detail to the preferred embodiments of the invention, examples of which are illustrated in the accompanying drawings, where like numerals indicate like components. While the invention will be described in conjunction with the preferred embodiments, it will be understood that they are not intended to limit the invention to those embodiments. On the contrary, the invention is intended to cover alternatives, modifications and equivalents, which may be included within the spirit and scope of the invention as defined by the appended claims.

As will be described in more detail below, the present invention is directed toward applications for packages mounted on a printed circuit board in an electronic device, which requires very low current and voltages, and is for DC voltages only. The present invention provides for a low power application in which the package includes one or more toroidal transformers which are carried or supported by a soft silicon type material within an open construction package and which utilizes a portion of the case as a standoff to ensure that the pin-posts do not touch a PCB when mounted by a user.

As described above, it is known that when the parts go through an infra-red soldering process, the magnetic components (ferrite toroids) can expand significantly. When using a hard epoxy type material, it has been found that the magnetic component expansion can often cause cracking of the package or case, which is highly undesirable. The present invention solves this problem by providing an open design within which is placed a soft silicon type material which allows for expansion during the soldering process, rather than trying to contain the components within a closed case or package. Hence, with the open construction, the present invention has no bottom at all. In addition, the magnetic components are not mounted on anything but rather are encapsulated or supported ("carried by a soft silicon type material"). The wires from the toroids are wound around and soldered to the pin-posts. This construction solves the cracking and expansion problems described above, as will now be described in conjunction with FIGS. **1–11**.

FIG. **1** shows an electronic surface mount transformer package or case **10** in three-dimensional view. FIG. **1** shows a cut-away of the empty case **10** with pins **14** molded into the case **10**, together a the notched post **12** upon which a wire is wound. Post **12** has an hour-glass shape which facilitates the winding of wire around post **12**, as will be

described. Typically, tin-lead plated copper alloy terminals are molded into the wall of the package **10**. The outer portion of the package **10** is formed to meet specified footing requirements. The inner post **12** serves as a terminal for internal wire termination use. The package material is made of type of thermal plastic which is in compliance with UL V-94 requirement for flammability.

FIG. **2** shows a wound toroid transformer **20** with wire **22** wrapped around the transformer **20**. The toroid core is typically made of ferrite material and the winding of wire **22** is done manually with fine insulated magnet wire.

FIG. **3** shows a cut-away of the molded part with the toroid **20** mounted inside and showing the wire **22** as it is then attached to post **14**. The wires **22** are pulled with minimum tension and wrapped around the terminal post **14** for two to two and a half turns. This operation is done when the case has been placed bottom side up.

FIG. **4** shows a silicon compound **30** poured inside the cavity with wire terminations that have been soldered with high temperature solder (95 Ag/5Sn) **32** and the package has been properly cleaned. The case **10** is then filled with soft silicone material (preferably a soft epoxy type material) to protect the transformer and to meet environmental requirements.

FIGS. **5** and **6** show the relationships between the safe guard (stand off) **34** and package's foot seating plane and inner terminal posts **12***a*. FIG. **5** shows the standoff **34**, in which the parts typically are placed automatically by machine onto a PC board. They are pressed down, as it is desirable to have some limitation of how far they can be pressed. It is also desirable that the post **12** does not touch the PC board, and so the end standoffs **34** do not allow that to happen. In a preferred embodiment, post **12** is oriented substantially perpendicular to, but does not touch, PC board.

FIG. **6** shows the distance in relationship between the end of the post **12** and where the PC board **36** is located and also where the standoff **34** ends. The PC board **36** would be at the base of the foot.

In FIG. **6**, the typical clearance of 0.015 inches from the safe guard **34** to the seating plane is to avoid interference to the coplanarity of the package. There is also a gap between the safe guard **34** and terminal post **12** to prevent the solder joints from touching the circuit board due to an over forced pick and place operation.

Inside the package **10**, there may be two, three, or more individual toroidal transformers. Wires coming off of the transformers are connected to the outside world. For example, the pins may be mounted on a printed circuit board in an electronic device. The leaf frame pins are injection molded into the body and which allows for an exposed notched post upon which the wire is wound from the toroidal transformer. This allows for the wires to be separated from pin to pin, and for soldering to be much more efficient.

FIG. **7** shows a closeup of the hour-glass shaped pin **12** and how pin **12** is molded inside the wall of the body and also the notch effect **40** of the pin **12**. The post **14** is notched so that the wires are kept away from another, post to post, which is very desirable. The separation is desirable so as to avoid arcing.

FIG. **8** shows the wire **22** wrapped around the pin or post **12**.

FIGS. **9A–9D** show end, top, side, and bottom views, respectively, of the electronic surface mount package **10**. The embodiment shown in FIGS. **9A–9D** provide an industrial standard surface mount footprint and package dimensions which are auto pick and placeable. In addition, special design consideration has been applied to thermal expansion of materials to ensure that the package will stand all normal re-flow processes with low cost, easy manufacturing, and high reliability.

In the industry, most manufacturers have used a two-piece construction, a base and a cover, and the case is backfilled with hard epoxy. In some processes, the coefficients of expansion of the epoxy that has been backfilled tends to cause the two pieces to separate. The base separates from the top, and as a result, can end up cracking. The present invention provides a one-piece open construction (an open bottom) only with the soft silicon filling to protect the toroid. The case is open at the bottom, thus allowing the toroids to expand naturally without cracking the body of the part.

FIG. **10** shows a bottom view of a **40** pin package **30** which includes pins **32** which includes a reinforcement beam **36** laterally disposed across the bottom of the case or package **30** reinforcement beam **36** provides extra support for improving the mechanical strength of the package **30**.

FIG. **11** shows an enlarged sectional view of the package **30** of FIG. **10** in which the reinforcement beam **36** is disposed laterally or sidewise across the bottom of the package or case **30**. The **40** pin surface mount package shown in FIGS. **10** and **11** include the reinforcement beam **36** which provides extra support to the mechanical strength of the package **30**. This provides for an improved mechanically stable package **30** which when undergoing an IR (infrared) re-flow process and also maintain the coplanarity of the leads or pins **32** shown in FIG. **11**.

Although FIG. **11** shows one reinforcement beam **36** laterally disposed across the bottom of the case or package **30**, it would be apparent to one of ordinary skill in the art that additional reinforcement beams can be located on the bottom of the case or package **30** as the situation warrants.

It should become apparent that various desirable features of the present invention have been shown and described. In the present invention, the pin termination is not flush mounted but rather extends from the bottom of the package. Further, the termination is wound and soldered to the extended pin-post assembly, as shown in FIGS. **1** and **3–8**. The use of a soft silicon type material (such as soft epoxy) to carry the toroid transformers within the case or package acts to encapsulate or support the toroid transformer within the case or package.

The present invention is directed toward applications for packages mounted on a printed circuit board in an electronic device, which requires very low current and voltages, and is for DC voltages only. The present invention provides for a low power application in which the package includes one or more toroidal transformers which are carried or supported by a soft silicon type material within an open construction package and which utilizes a portion of the-case as a standoff to ensure that the pin-posts do not touch a PCB when mounted by a user.

It is widely known that when the toroidal magnetics are mounted in hard plastic packages, the infra-red soldering processes cause the magnetic components (ferrite) to expand significantly. When using a hard epoxy type material, it has been found that the magnetic component expansion can often cause cracking of the package or case, which is highly undesirable. The present invention solves this problem by providing an open design within which is placed a soft silicon type material which allows for expansion during the soldering process, rather than contain the components within a closed case or package. Hence, with the open construction,

the present invention has no bottom at all. In addition, the magnetic components are not mounted on anything but rather are encapsulated or supported ("carried by a soft silicon type material") such that when the wires are wound around and soldered to the pin-posts, the cracking and expansion problems described above are avoided.

The foregoing descriptions of specific embodiments of the present invention have been presented for purposes of illustration and description. They are not intended to be exhaustive or to limit the invention to the precise forms disclosed, and it should be understood that many modifications and variations are possible in light of the above teaching. The embodiments were chosen and described iu order to best explain the principles of the iuvention and its practical application, to thereby enable others skilled in the art to best utilize the invention and various embodiments with various modifications as are suited to the particular use contemplated. It is intended that the scope of the invention be defined by the Claims appended hereto and their equivalents.

What is claimed is:

1 An electronic surface mount package for mounting onto a printed circuit board comprising:

a one piece construction package having a side wall and an open bottom,

a plurality of toroid transformers within said package, said toroid transformers each having wires wrapped thereon,

a plurality of terminal pins molded within and extending througb and below a bottom of said side wall, one end of each of said pins having a notched solder post upon which said wires from said transformers are wrapped and soldered thereon, respectively,

the other end of each of said terminal pins extending in gull wing fashion outwardly from and below the bottom of the side wall for mounting onto the surface of the printed circuit board, and

at least one reinforcement beam located laterally along the bottom of said package to provide improved mechanical strength of said package.

2. An electronic surface mount package for mounting onto a printed circuit board comprising:

a construction package having a side wall and an open bottom,

a plurality of toroid transformers within said package, said toroid transformers each having wires wrapped thereon,

a plurality of terminal pins molded within and extending through and below a bottom of said side wall, one end of each of said pins having a notched solder post upon which said wires from said transformers are wrapped and soldered thereon, respectively,

the other end of each of said terminal pins extending in gull wing fashion outwardly from and below the bottom of the side wall for mounting onto the surface of the printed circuit board, and

at least one reinforcement beam located laterally along the bottom of said package to provide improved mechanical strength of said package.

3. A package as in claim 2 wherein said construction package is one piece.

4. The package of claim 3 wherein said construction package has an open bottom.

5. The package of claim 4 wherein said posts are separated from one another so as to avoid arcing.

6. An electronic surface mount package for mounting onto a printed circuit board in an electronic device, said electronic surface mount package comprising:

a one piece construction package having a side wall and an open bottom,

a plurality of toroid transformers within said package, said toroid transformers each having wires wrapped thereon,

a plurality of terminal pins molded within and extending through and below a bottom of said side wall, one end of each of said pins having a notched solder post upon which said wires from said transformers are wrapped and soldered thereon, respectively,

the otber end of eacb of said terminal pins extending in gull wing fashion outwardly from and below tbe bottom of tbe side wall for mounting onto the surface of the printed circuit board, and

at least one reinforcement beam located laterally along the bottom of said package to provide improved mechanical strength of said package.

7. The package as in claim 6 further including a standoff for maintaining a distance between said terminal pins and said printed circuit board.

* * * * *

EXHIBIT D

US006320489B1

(12) **United States Patent**
Lu et al.

(10) **Patent No.: US 6,320,489 B1**
(45) **Date of Patent: Nov. 20, 2001**

(54) **ELECTRONIC SURFACE MOUNT PACKAGE WITH EXTENDED SIDE RETAINING WALL**

(75) Inventors: **Peter Lu**, Flower Mound, TX (US); **Jeffrey Heaton**, Cupertino; **James W. Heaton**, Los Altos, both of CA (US); **Peter Loh Hang Pao**, Kowloon (HK); **Robert Loke Hang Lam**, Kowloon (HK); **Tsang Kei Sun**, Kowloon (HK)

(73) Assignee: **Halo Electronics, Inc.**, Redwood City, CA (US)

(*) Notice: Subject to any disclaimer, the term of this patent is extended or adjusted under 35 U.S.C. 154(b) by 0 days.

(21) Appl. No.: **08/977,400**

(22) Filed: **Nov. 24, 1997**

Related U.S. Application Data

(63) Continuation-in-part of application No. 08/773,555, filed on Dec. 27, 1996, which is a continuation-in-part of application No. 08/513,573, filed on Aug. 10, 1995, now Pat. No. 5,656,985.

(51) **Int. Cl.**[7] **H01F 27/02**; H01F 27/29

(52) **U.S. Cl.** **336/96**; 336/192; 336/90; 336/229

(58) **Field of Search** 174/52.4, 50; 361/821, 361/752; 336/192, 229, 65, 96, 90

(56) **References Cited**

U.S. PATENT DOCUMENTS

3,721,747 * 3/1973 Renskers 336/96
5,034,854 * 7/1991 Matsumura et al. 336/192

FOREIGN PATENT DOCUMENTS

0 490 438 A1 6/1992 (EP) .

OTHER PUBLICATIONS

McCormick; Surface Mount Transformers: A New Packaging Approach; Surface Mount Technology; Feb. 1993; pp. 27–31.

Wyns et al.; PSPICE Simulations and 3D–PCB Transformers for ZVS Full Bridge Converters; The European Power Electronics Association; 1993; pp. 208–214.

(List continued on next page.)

Primary Examiner—Anh Mai
(74) *Attorney, Agent, or Firm*—Trial & Technology Law Group

(57) **ABSTRACT**

The electronic surface mount package according to the present invention includes a one piece construction package having end walls, a side wall and an open bottom; a plurality of toroid transformers carried within the package by a soft silicone material wherein the toroid transformers each have wires wrapped thereon; a plurality of terminal pins molded within and extending from the bottom of the package wherein each of the pins extend through a bottom portion of the side wall and have a notched post upon which the wires from said transformers are wrapped and soldered thereon, respectively; and wherein the end walls have a first height H1 to form a standoff or safe guard between the foot seating plane of the package and the terminal pins; and wherein the outer portion of the side wall extends between the end walls such that the side wall has a second height H2 which is less than said first height H1. The extended side retaining wall provides for improved containment of the soft silicone material within the package. The extended side retaining wall also provides for improved coverage of the wire wrapped solder posts. In addition, since the height H2 of the extended side retaining wall is less than the height H1 of the safe guard, the mounting of the package onto a printed circuit board with the extended side retaining wall allows for cleaning of the PCB with wash liquids which can flow freely under the package under the portion of the extended side wall which is less in height than the height of the safeguard (H1<H2).

8 Claims, 9 Drawing Sheets

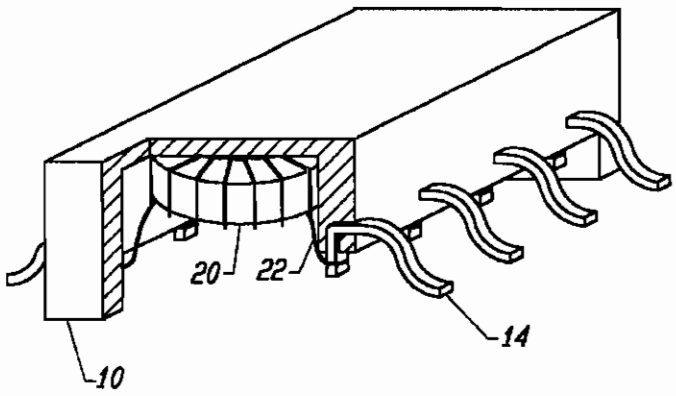

OTHER PUBLICATIONS

EPE'93 Fifth European Conference; Power Electronics and Applications; vol. 3: Electronic Power Supply System; Sep. 13–16, 1993; pp. 215.

Davis; SMT Passive Components Fit Power Electronics Applications; PCIM; Jun. 1993; vol. 19; No. 6; pp. 20–28 and 90.

Osawa; A Superminiaturized Double–Balanced SMT Mixer–Modulator; Microwave Journal; Feb. 1994; pp. 90–97.

Lyons et al.; Printed Circuit Board Magnetics: A New Approach to the Mass Production of Toroidal Transformers; ISHM '95 Proceedings; pp. 53–58.

Derebail et al.; Knowledge Based Adhesive Selection for SMT Assemblies; Proceedings 1995 International Symposium on Microelectronics; Oct. 24–26, 1995; vol. 2649; pp. 1024–1035.

* cited by examiner

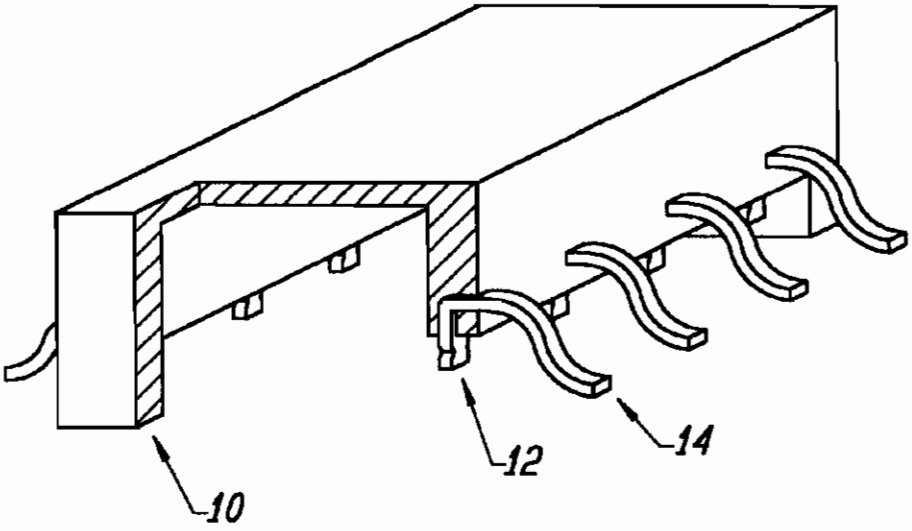

FIG. 1

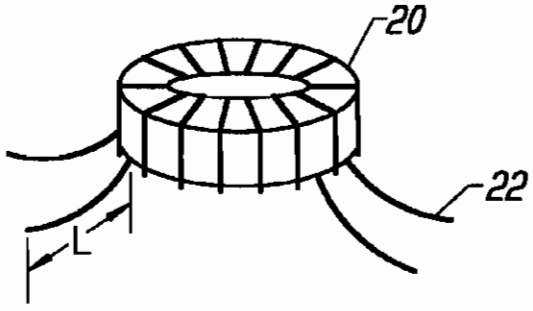

FIG. 2

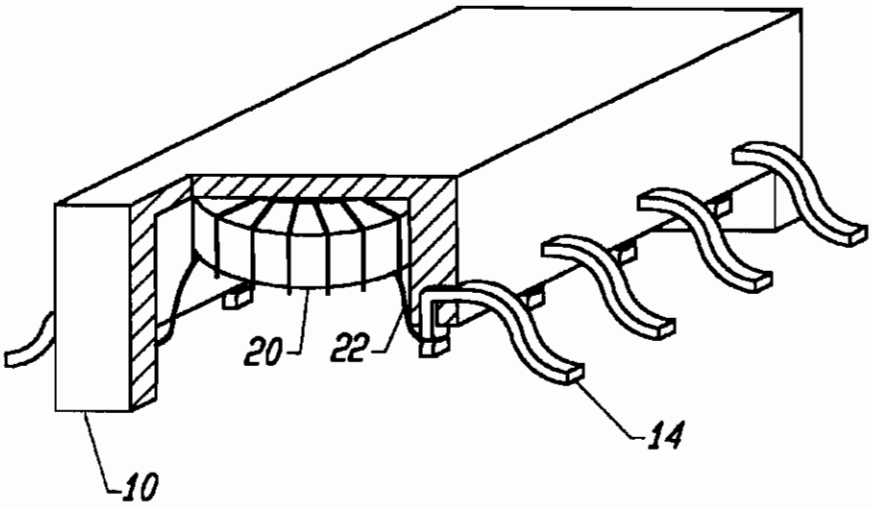

FIG. 3

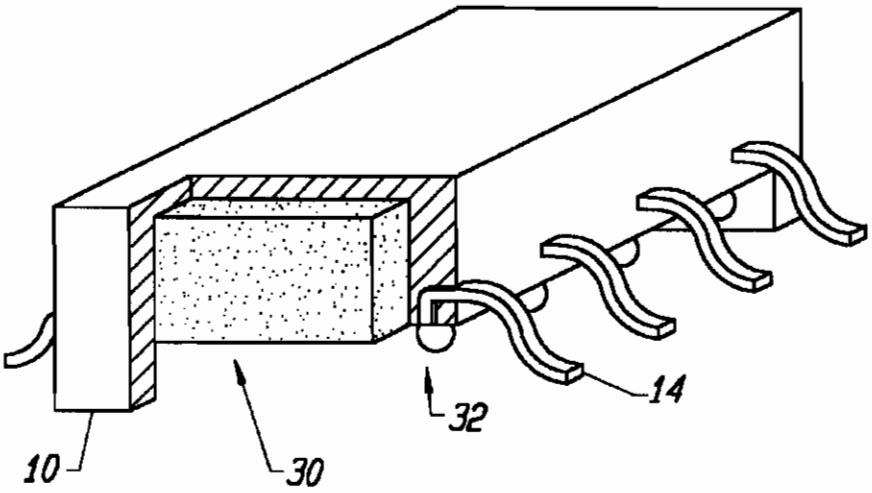

FIG. 4

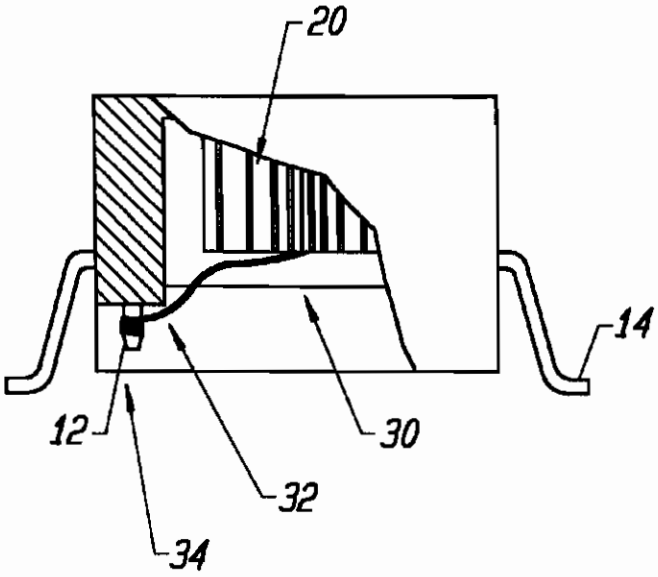

FIG. 5

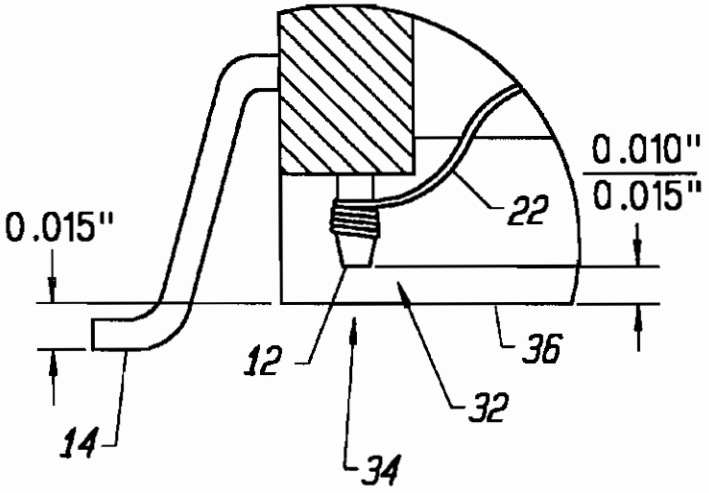

FIG. 6

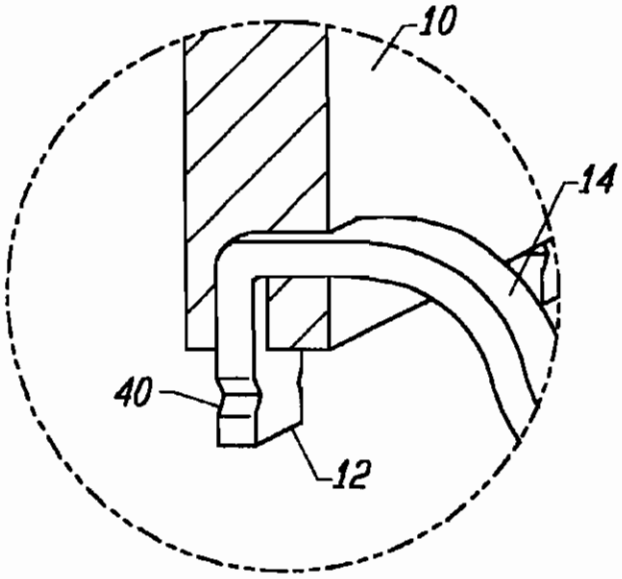

FIG. 7

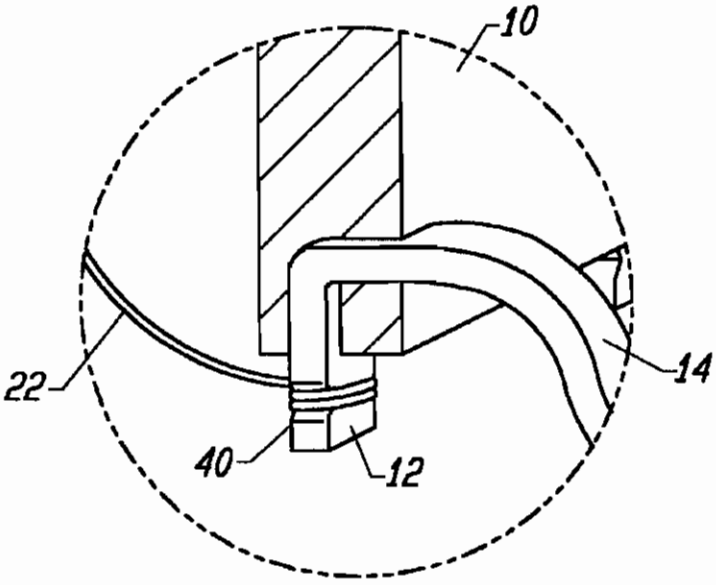

FIG. 8

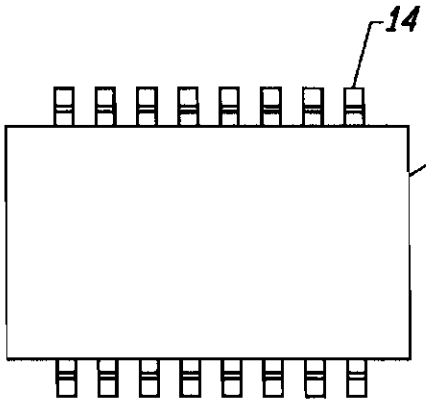

FIG. 9B

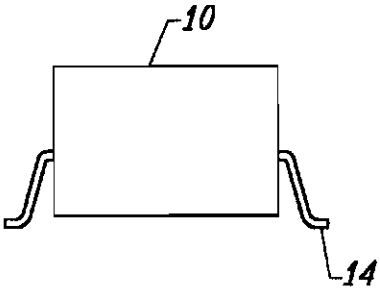

FIG. 9A

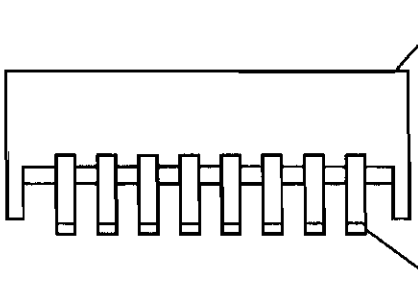

FIG. 9C

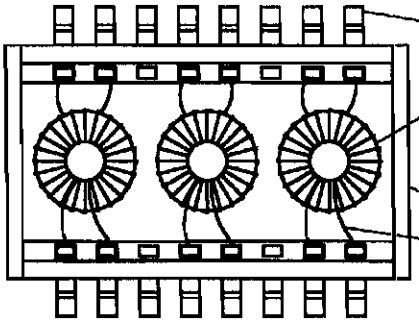

FIG. 9D

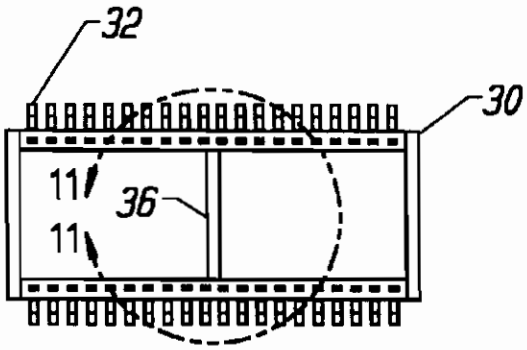

FIG. 10

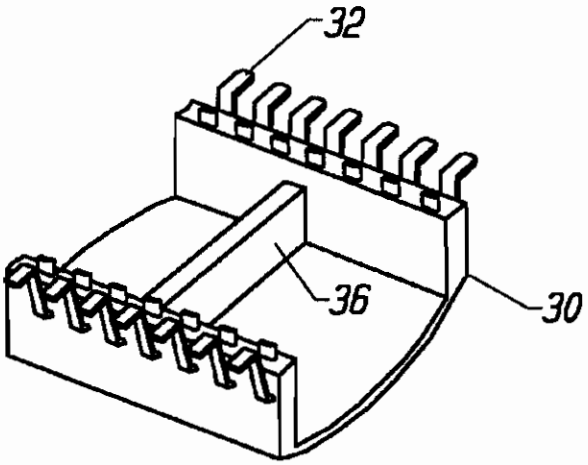

FIG. 11

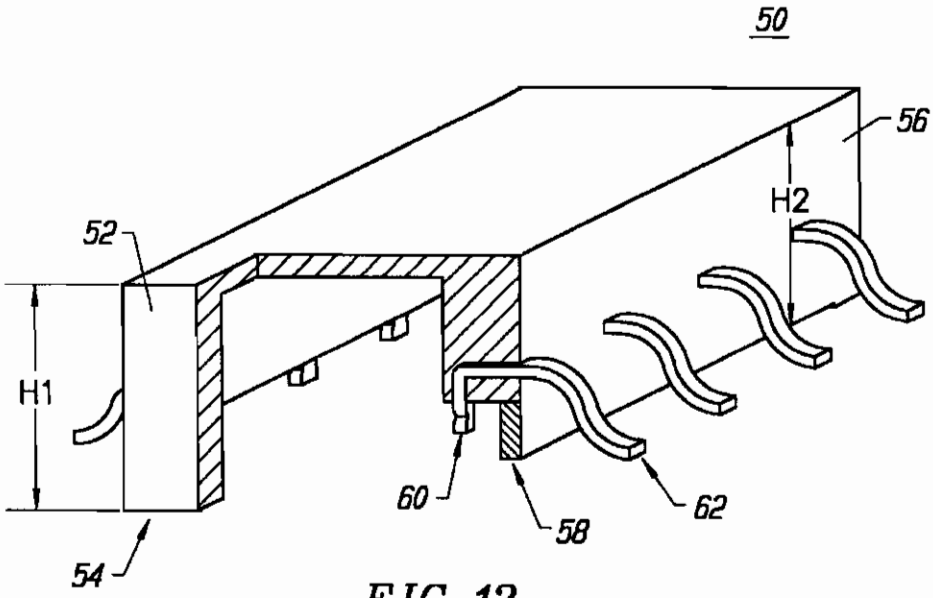

FIG. 12

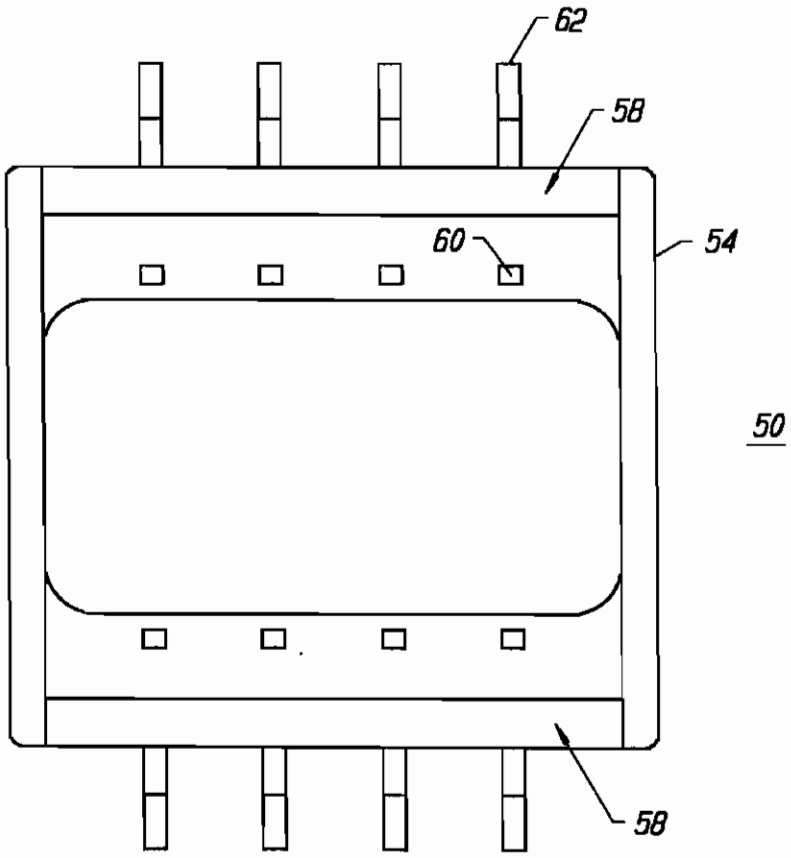

FIG. 13

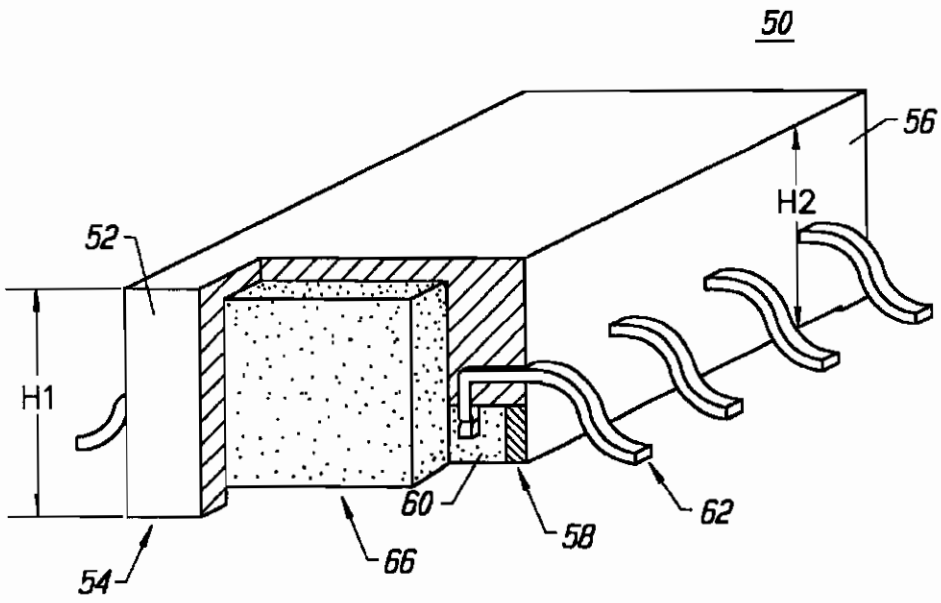

FIG. 14

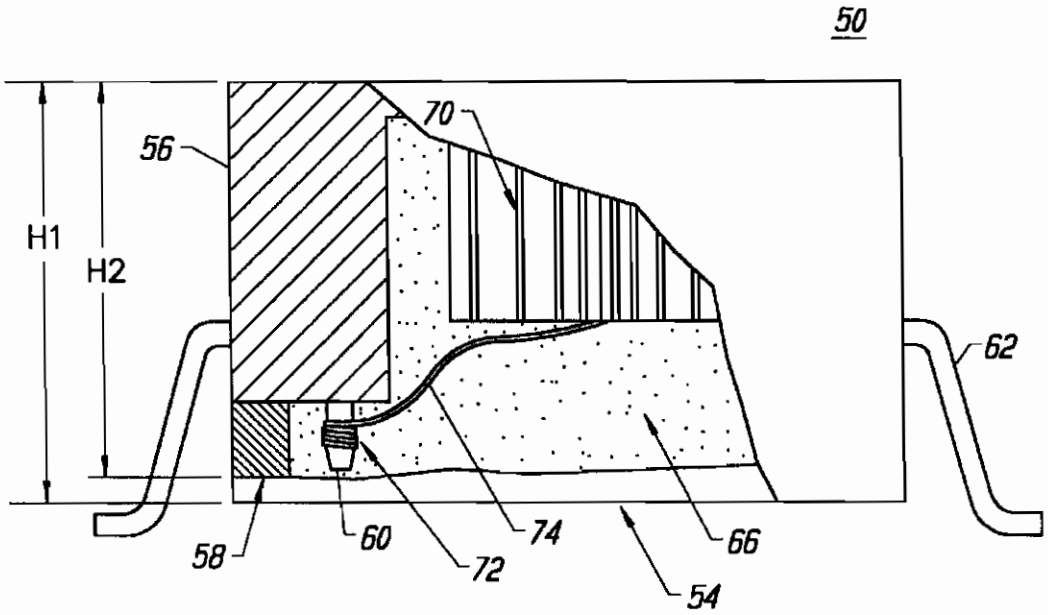

FIG. 15

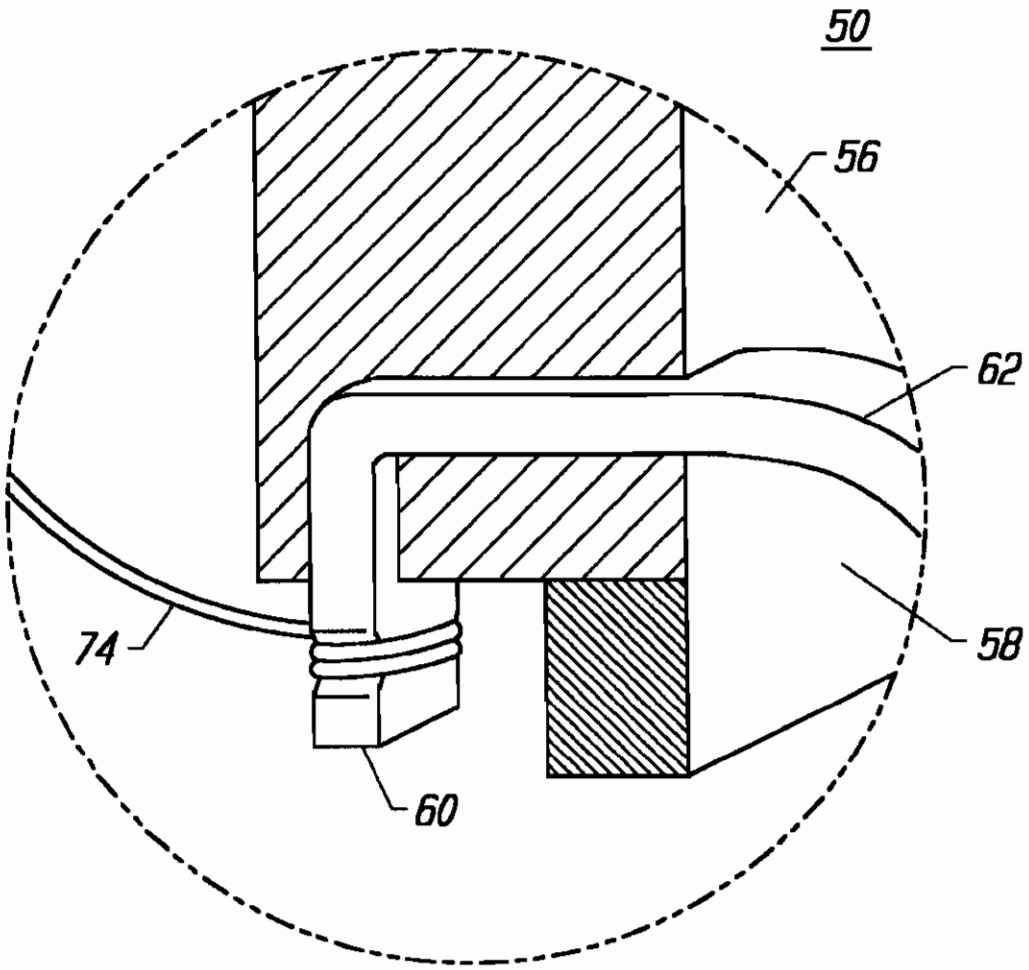

FIG. 16

ELECTRONIC SURFACE MOUNT PACKAGE WITH EXTENDED SIDE RETAINING WALL

CROSS REFERENCE TO RELATED APPLICATIONS

The present application is a continuation-in-part of copending continuation-in-part application entitled ELECTRONIC SURFACE MOUNT PACKAGE, Ser. No. 08/773,555 filed Dec. 27, 1996, which is a continuation-in-part application of Ser. No. 08/513,573, filed Aug. 10, 1995, now U.S Pat. No. 5,656,985, and assigned to the same Assignee as the present application.

BACKGROUND OF THE INVENTION

The present invention relates to an electronic surface mount package or case and more particularly to an electronic surface mount package with an extended side retaining wall. Electronic surface mount packages are utilized in applications in which one or more individual toroid transformers are embodied within the surface mount package.

Wires coming off the transformers are electronically tied to pins or posts on the package for connection to an electronic device. Typically, the electronic surface mount packages are mounted on a printed circuit board for utilization in the electronic device.

It is widely known in the local area magnetic industry that when surface mount toroidal magnetics which are encapsulated in hard plastics go through infra-red soldering processes, the magnetic components (ferrite) can expand significantly. When using a hard epoxy type material, it has been found that the magnetic component expansion can often cause cracking of the package or case, which makes the part unusable. The electronic surface package described in the cross-referenced U.S. Pat. No. 5,656,985 provides a soft silicone type material to encapsulate (carry) a plurality of toroid transformers within the package. The toroid transformers in turn are electrically connected to a plurality of terminal posts molded within the package. In view of the foregoing, it would be highly desirable to provide an improved electronic surface mount package which avoids the cracking and expansion problems described above and in addition provides additional coverage for the terminal pins to which the toroids are electrically connected as well as additional coverage for the soft silicone type material which encapsulates the toroids within the package.

SUMMARY OF THE INVENTION

It is an object of the present invention to provide an improved electronic surface mount package.

According to one preferred embodiment, the present invention provides a one piece construction package (with an open bottom) with one or more terminal pins molded into the package. Each of the pins have a notched post upon which a wire is wound and soldered. The wire which is wound and soldered around each terminal pin/post is from a respective toroid transformer carried within the package. Each of the posts are notched so that the respective wires are separated from one another so as to avoid arcing. The case is open at the bottom which prevents cracking and allows for the toroidal expansion. A soft silicone type material is added to the open package to provide support (to carry) the toroid transformers. In one embodiment, the present invention also includes a reinforcement beam that is disposed laterally or sidewise across the bottom of the package to provide extra support in the mechanical strength of the case. In another

embodiment, the present invention also includes an extended side retaining wall for retaining the soft silicone type material and providing additional coverage of the soft silicone material the end walls have a first height H1 to form a standoff or safe guard between the foot seating plane of the package and the terminal pins; and the outer portion of the side wall extends between the end walls such that the side wall has a second height H2 which is less than said first height H1. The mounting of the package onto a printed circuit board (PCB) with the extended side retaining wall according to the present invention allows for cleaning of the PCB with wash liquids which can flow freely under the package under the portion of the extended side wall, since the height of the extended side retaining wall (H2) is less than the height of the safeguard H1 (H2<H1). The extended side retaining wall provides for improved containment of the soft silicone material within the package. The extended side retaining wall also provides for improved coverage of the wire wrapped solder posts.

Other objects, features, and advantages of the present invention will become apparent from the following detailed description when taken in conjunction with the accompanying drawings.

BRIEF DESCRIPTION OF THE DRAWINGS

The accompanying drawings, which are incorporated in and form a part of this specification, illustrate embodiments of the invention and, together with the description, serve to explain the principles of the invention:

FIG. **1** shows an electronic surface mount package in three-dimensional view according to the present invention.

FIG. **2** shows a wound toroid transformer.

FIG. **3** shows the connection of the toroid transformer of FIG. **2** within the electronic surface mount package of FIG. **1**.

FIG. **4** shows the electronic surface mount package of FIG. **1** after wire terminations have been soldered.

FIGS. **5** and **6** show relationships between a safeguard (standoff) and the electronic surface-mount package's foot seating plane and inner terminal posts, respectively.

FIG. **7** shows a close-up of the pin configuration of FIG. **1** and how it is molded inside the wall of the body of the package.

FIG. **8** shows wire wrapped around the pin or post of FIG. **7**.

FIGS. **9**A–**9**D show end, top, side, and bottom views of electronic surface mount package according to the present invention.

FIG. **10** shows a bottom view of a **40** pin package according to the present invention.

FIG. **11** shows an enlarged sectional view of FIG. **10** illustrating a reinforcement beam.

FIG. **12** shows a three dimensional view of an electronic surface mount package with extended side retaining wall according to the present invention.

FIG. **13** shows a bottom view of the electronic surface mount package with extended side retaining wall according to the present invention.

FIG. **14** shows a more detailed view of the electronic surface mount package with extended side retaining wall according to the present invention.

FIG. **15** shoes a cross sectional end view of the electronic surface mount package with extended side retaining wall according to the present invention.

FIG. **16** shows a close up view of one terminal pin contained within the electronic surface mount package with extended side retaining wall according to the present invention.

DETAILED DESCRIPTION OF THE DRAWINGS

Reference will now be made in detail to the preferred embodiments of the invention, examples of which are illustrated in the accompanying drawings, where like numerals indicate like components. While the invention will be described in conjunction with the preferred embodiments, it will be understood that they are not intended to limit the invention to those embodiments. On the contrary, the invention is intended to cover alternatives, modifications and equivalents, which may be included within the spirit and scope of the invention as defined by the appended claims.

As will be described in more detail below, the present invention is directed toward applications for packages mounted on a printed circuit board in an electronic device, which requires very low current and voltages, and is for DC voltages only. The present invention provides for a low power application in which the package includes one or more toroidal transformers which are carried or supported by a soft silicone material within an open construction package and which utilizes a portion of the case as a standoff to ensure that the pinposts do not touch a PCB when mounted by a user.

As described above, it is known that when the parts go through an infra-red soldering process, the magnetic components (ferrite toroids) can expand significantly. When using a hard epoxy type material, it has been found that the magnetic component expansion can often cause cracking of the package or case, which is highly undesirable. The present invention solves this problem by providing an open design within which is placed a soft silicone material which allows for expansion during the soldering process, rather than trying to contain the components within a closed case or package. Hence, with the open construction, the present invention has no bottom at all. In addition, the magnetic components are not mounted on anything but rather are encapsulated or supported ("carried by a soft silicone material"). The wires from the toroids are wound around and soldered to the pin-posts. This construction solves the cracking and. expansion problems described above, as will now be described in conjunction with FIGS. **1–17**.

FIG. **1** shows an electronic surface mount transformer package or case **10** in three-dimensional view. FIG. **1** shows a cut-away of the empty case **10** with pins **14** molded into the case **10**, together a the notched post **12** upon which a wire is wound. Post **12** has an hour-glass shape which facilitates the winding of wire around post **12**, as will be described. Typically, tin-lead plated copper alloy terminals are molded into the wall of the package **10** with the terminals extending through and below the bottom of the wall. The outer portion of the package **10** is formed to meet specified footing requirements. The inner post **12** serves as a terminal for internal wire termination use. The package material is made of type of thermal plastic which is in compliance with UL V-94 requirement for flammability.

FIG. **2** shows a wound toroid transformer **20** with wire **22** wrapped around the transformer **20**. The toroid core is typically made of ferrite material and the winding of wire **22** is done manually with fine insulated magnet wire.

FIG. **3** shows a cut-away of the molded part with the toroid **20** mounted inside and showing the wire **22** as it is then attached to post **14**. The wires **22** are pulled with

minimum tension and wrapped around the terminal post **14** for two to two and a half turns. This operation is done when the case has been placed bottom side up.

FIG. **4** shows a silicone compound **30** poured inside the cavity with wire terminations that have been soldered with high temperature solder (95 Ag/5Sn) **32** and the package has been properly cleaned. The case **10** is then filled with soft silicone material (preferably a soft epoxy type material) to protect the transformer and to meet environmental requirements.

FIGS. **5** and **6** show the relationships between the safe guard (stand off) **34** and package's foot seating plane and inner terminal posts **12***a*. FIG. **5** shows the standoff **34**, in which the parts typically are placed automatically by machine onto a PC board. They are pressed down, as it is desirable to have some limitation of how far they can be pressed. It is also desirable that the post **12** does not touch the PC board, and so the end standoffs **34** do not allow that to happen. In a preferred embodiment, post **12** is oriented substantially perpendicular to, hut does not touch, PC board.

FIG. **6** shows the distance in relationship between the end of the post **12** and where the PC board **36** is located and also where the standoff **34** ends. The PC board **36** would be at the base of the foot.

In FIG. **6**, the typical clearance of 0.015 inches from the safe guard **34** to the seating plane is to avoid interference to the coplanarity of the package. There is also a gap between the safe guard **34** and terminal post **12** to prevent the solder joints from touching the circuit board due to an over forced pick and place operation.

Inside the package **10**, there may be two, three, or more individual toroidal transformers. Wires coming off of the transformers are connected to the outside world. For example, the pins may be mounted on a printed circuit board in an electronic device. The leaf frame pins are injection molded into the body and which allows for an exposed notched post upon which the wire is wound from the toroidal transformer. This allows for the wires to be separated from pin to pin, and for soldering to be much more efficient.

FIG. **7** shows a closeup of the hour-glass shaped pin **12** and how pin **12** is molded inside the wall of the body and also the notch effect **40** of the pin **12**. The post **14** is notched so that the wires are kept away from another, post to post, which is very desirable. The separation is desirable so as to avoid arcing.

FIG. **8** shows the wire **22** wrapped around the pin or post **12**.

FIGS. **9A–9D** show end, top, side, and bottom views, respectively, of the electronic surface mount package **10**. The embodiment shown in FIGS. **9A–9D** provide an industrial standard surface mount footprint and package dimensions which are auto pick and placeable. In addition, special design consideration has been applied to thermal expansion of materials to ensure that the package will stand all normal re-flow processes with low cost, easy manufacturing, and high reliability.

In the industry, most manufacturers have used a two-piece construction, a base and a cover, and the case is backfilled with hard epoxy. In some processes, the coefficients of expansion of the epoxy that has been backfilled tends to cause the two pieces to separate. The base separates from the top, and as a result, can end up cracking. The present invention provides a one-piece open construction (an open bottom) only with the soft silicone filling to protect the toroid. The case is open at the bottom, thus allowing the toroids to expand naturally without cracking the body of the part.

FIG. **10** shows a bottom view of a **40** pin package **30** which includes pins **32** which includes a reinforcement beam **36** laterally disposed across the bottom of the case or package **30** reinforcement beam **36** provides extra support for improving the mechanical strength of the package **30**.

FIG. **11** shows an enlarged sectional view of the package **30** of FIG. **10** in which the reinforcement beam **36** is disposed laterally or sidewise across the bottom of the package or case **30**. The **40** pin surface mount package shown in FIGS. **10** and **11** include the reinforcement beam **36** which provides extra support to the mechanical strength of the package **30**. This provides for an improved mechanically stable package **30** which when undergoing an IR (infrared) re-flow process and also maintain the coplanarity of the leads or pins **32** shown in FIG. **11**.

Although FIG. **11** shows one reinforcement beam **36** laterally disposed across the bottom of the case or package **30**, it would be apparent to one of ordinary skill in the art that additional reinforcement beams can be located on the bottom of the case or package **30** as the situation warrants.

It should become apparent that various desirable features of the present invention have been shown and described. In the present invention, the pin termination is not flush mounted but rather extends from the bottom of the package. Further, the termination is wound and soldered to the extended pin-post package, as shown in FIGS. **1** and **3–8**. The use of a soft silicone material (such as soft epoxy) to carry the toroid transformers within the case or package acts to encapsulate or support the toroid transformer within the case or package.

ELECTRONIC SURFACE MOUNT PACKAGE WITH EXTENDED SIDE RETAINING WALL EMBODIMENT

The features of the electronic surface mount package with extended side retaining wall embodiment will now be described in conjunction with FIGS. **12–16**. The electronic surface mount package according to the present invention includes a one piece construction package having end walls, a side wall and an open bottom; a plurality of toroid transformers carried within the package by a soft silicone material wherein the toroid transformers each have wires wrapped thereon; a plurality of terminal pins molded within and extending from the bottom of the package wherein each of the pins extend through a bottom portion of the side wall and have a notched post upon which the wires from said transformers are wrapped and soldered thereon, respectively; and wherein the end walls have a first height H1 to form a standoff or safe guard between the foot seating plane of the package and the terminal pins; and wherein the outer portion of the side wall extends between the end walls such that the side wall has a second height H2 which is less than said first height H1.

FIG. **12** shows a three dimensional view of an electronic surface mount package **50** with a side wall **56** having an extended side retaining wall portion **58** according to the present invention. The view shown in FIG. **12** is similar to that view shown in FIG. **1**, with the addition of the extended side retaining wall portion **58**. The end wall **52** forms a safeguard **54** shown in FIG. **12**, and which is similar to safeguard **34** shown in FIGS. **5** and **6**. The end wall **52** has a height H1. The solder post **60** and leads **62** shown in FIG. **12** are also similar to posts **12** and leads **14** shown in FIG. **1**. As can be seen in FIG. **12**, the extended side retaining wall portion **58** extends from the remaining portion of side wall **56** so as to form a projection or ledge. Preferably, the height H2 of the side wall **56** including the extended side retaining wall portion **58** is less than the height H1 of the end wall (H2<H1).

As will be understood, the extended side retaining wall outer portion **58** provides for improved containment of the soft silicone material within the package. The extended side retaining wall portion **58** also provides for improved coverage of the wire wrapped solder posts **60**. In addition, since the height H2 of the extended side retaining wall portion **58** is less than the height H1 of the safe guard **54**, the mounting of the package **50** onto a printed circuit board with the extended side retaining wall portion **58** allows for cleaning of the PCB with wash liquids which can flow freely under the package **50** under the portion of the extended side wall portion **58** which is less in height than the height of the safeguard (H2<H1).

FIG. **13** shows a bottom view of the package **50** of FIG. **12**, in which the side retaining wall portion **58** is located between the respective safeguards (end walls) **54**. The bottom of each terminal pin **60** can also be seen, as well as the leads **62**. For clarity purposes, the bottom view of the package shown in FIG. **13** does not include the toroid transformers and silicone material shown in FIGS. **5,6** and **9-D**. However, a complete electronic surface mount package **50** according to the present invention would include the toroid transformers and a soft silicone material.

FIG. **14** shows a more detailed three dimensional view of the electronic surface mount package **50** with extended side retaining wall portion **58** according to the present invention. The package **50** shown in FIG. **14** includes the side wall **56** with the extended side retaining wall portion **58**, terminal posts **60**, leads **62**, end wall **52** which forms safeguard **54**, and soft silicone material **66**. It can be seen in FIG. **14** that the extended side retaining wall portion **66** provides additional coverage of the soft silicone material **66** as well as more coverage of the posts **60**. Also, because the height H2 of the side wall **56** is less than the height H1 of the end wall (safeguard) **52**, the mounting of the package **50** onto a printed circuit board with the extended side retaining wall portion **58** allows for cleaning of the PCB with wash liquids which can flow freely under the package **50** under the portion of the extended side wall portion **58** which is less in height than the height of the safeguard (H2<H1).

FIG. **15** shows a cross sectional end view of the electronic surface mount package **50** with extended side retaining wall portion **58** according to the present invention. The package **50** shown in FIG. **15** includes the toroid transformer **70** carried by the soft silicone material **66**, safeguard **54**, lead **62**, side wall **56** including the extended side retaining wall portion **58** and the terminal post **60** with wire **74** wrapped thereon and soldered by solder joint **72**. It can be seen in FIG. **15** that the side wall **56** including the extended side retaining wall portion **58** has a height H2 which is less than the height Hi of the safe guard (end wall) **54**. As previously described, the end walls **52** have a first height Hi to form a standoff or safe guard **54** between the foot seating plane of the package **50** and the terminal posts **60**, and the outer portion **58** of the side wall **56** extends between the end walls **52** such that the side wall **56** has a second height H2 which is less than said first height Hi. The mounting of the package **50** onto a printed circuit board (PCB) with the extended side retaining wall portion **58** according to the present invention allows for cleaning of the PCB with wash liquids which can flow freely under the package **50** under the portion of the extended side wall **58**, since the height of the extended side retaining wall (H2) is less than the height of the safeguard H1 (H2<H1). As also previously described, the extended

side retaining wall **58** provides for improved containment or coverage of the soft silicone material **66** within the package **50**. The extended side retaining wall portion **58** also provides for improved coverage of the wire wrapped solder posts **60**.

FIG. **16** shows a close up view of one terminal post **60** contained within the electronic surface mount package **50** with extended side retaining wall portion **58** according to the present invention FIG. **16** shows the terminal post **60** with wire **74** wrapped thereon. FIG. **16** clearly shows the improved extended coverage of the soldered terminal posts **60** by the extended side retaining wall portion **58** according to the present invention.

The present invention is directed toward applications for packages mounted on a printed circuit board in an electronic device, which requires very low current and voltages, and is for DC voltages only. The present invention provides for a low power application in which the package includes one or more toroidal transformers which are carried or supported by a soft silicone material within an open construction package and which utilizes a portion of the case as a standoff to ensure that the pin-posts do not touch a PCB when mounted by a user.

It is widely known that when the toroidal magnetics are mounted in hard plastic packages, the infra-red soldering processes cause the magnetic components (ferrite) to expand significantly. When using a hard epoxy type material, it has been found that the magnetic component expansion can often cause cracking of the package or case, which is highly undesirable. The present invention solves this problem by providing an open design within which is placed a soft silicone material which allows for expansion during the soldering process, rather than contain the components within a closed case or package. Hence, with the open construction, the present invention has no bottom at all. In addition, the magnetic components are not mounted on anything but rather are encapsulated or supported ("carried by a soft silicone material") such that when the wires are wound around and soldered to the pin-posts, the cracking and expansion problems described above are avoided.

As has been described, the electronic surface mount package according to the present invention includes a one piece construction package having end walls, a side wall and an open bottom; a plurality of toroid transformers carried within the package by a soft silicone material wherein the toroid transformers each have wires wrapped thereon; a plurality of terminal pins molded within and extending from the bottom of the package wherein each of the pins extend through a bottom portion of the side wall and have a notched post upon which the wires from said transformers are wrapped and soldered thereon, respectively; and wherein the end walls have a first height H1 to form a standoff or safe guard between the foot seating plane of the package and the terminal pins; and wherein the outer portion of the side wall extends between the end walls such that the side wall has a second height H2 which is less than said first height H1.

The extended side retaining wall provides for improved containment of the soft. silicone material within the package. The extended side retaining wall also provides for improved coverage of the wire wrapped solder posts. In addition, since the height H2 of the extended side retaining wall is less than the height H1 of the safe guard, the mounting of the package onto a printed circuit board with the extended side retaining wall allows for cleaning of the PCB with wash liquids which can flow freely under the package under the portion of the extended side wall which is less in height than the height of the safeguard (H2<H1).

The foregoing descriptions of specific embodiments of the present invention have been presented for purposes of illustration and description. They are not intended to be exhaustive or to limit the invention to the precise forms disclosed, and it should be understood that many modifications and variations are possible in light of the above teaching. The embodiments were chosen and described in order to best explain the principles of the invention and its practical application, to thereby enable others skilled in the art to best utilize the invention and various embodiments with various modifications as are suited to the particular use contemplated. It is intended that the scope of the invention be defined by the claims appended hereto and their equivalents.

What is claimed is:

1. An electronic surface mount package for mounting onto the surface of a printed circuit board comprising:

a one piece construction package having end walls, a side wall and an open bottom,

a plurality of toroid transformers within said package by a soft silicone material, said toroid transformers each having wires wrapped thereon;

a plurality of terminal pins molded within and extending from the bottom of said package, each of said pins extending through a bottom portion of said side wall and below the inner portion of said side wall and having a notched solder post upon which said wires from said transformers are wrapped and soldered thereon, respectively;

said end walls having a first height Hi to form a standoff or safe guard between the surface of a printed circuit board and said terminal pins;

the outer portion of said side wall extending between said end walls and having a second height H2 which is less than said first height H1.

2. An electronic surface mount package for mounting onto the surface of a printed circuit board comprising:

a construction package having end walls, a side wall and an open bottom,

a plurality of toroid transformers within said package by a soft silicone material, said toroid transformers each having wires wrapped thereon,

a plurality of terminal pins molded within and extending from the bottom of said package, each of said pins extending through a bottom portion of said side wall and below the inner portion of said side wall and having notched solder posts upon which said wires from said transformers are wrapped and soldered thereon, respectively;

said end walls having a first height H1 to form a standoff or safe guard between the surface of a printed circuit board and said terminal pins;

the outer portion of said side wall extending between said end walls and having a second height H2 which is less than said first height H1.

3. A package as in claim **2** wherein said construction package is one piece.

4. The package of claim **3** wherein said posts are separated from one another so as to avoid arcing.

5. An electronic surface mount package for mounting onto the surface of a printed circuit board in an electronic device, said electronic surface mount package comprising:

a one piece construction package having end walls, a side wall and an open bottom,

a plurality of toroid transformers within said package by a soft silicone material, said toroid transformers each having wires wrapped thereon,

a plurality of terminal pins molded within and extending from the bottom of said package, each of said pins extending through a bottom portion of said side wall and below the inner portion of said side wall and having a notched solder post upon which said wires from said transformers are wrapped and soldered thereon, respectively,

said end walls having a first height H1 to form a standoff or safe guard between the surface of a printed circuit board and said terminal pins;

the outer portion of said side wall extending between said end walls and having a second height H2 which is less than said first height H1.

6. The package as in claim **5** further including a standoff for maintaining a distance between the bottom of said pins and said printed circuit board.

7. An electronic surface mount package for mounting onto the surface of a printed circuit board comprising:

a construction package having end walls, a side wall and an open bottom,

at least one toroid transformer within said package by a soft silicone material, said toroid transformer having a wire wrapped thereon,

at least one terminal pin molded within and extending from the bottom of said package, said pin extending through a bottom portion of said side wall and below the inner portion of said side wall and having a notched solder post upon which said wire from said transformer is wrapped and soldered thereon,

said end walls having a first height H1 to form a standoff or safe guard between the surface of a printed circuit board and said terminal pins;

the outer portion of said side wall extending between said end walls and having a second height H2 which is less than said first height H1.

8. An electronic surface mount package for mounting onto the surface of a printed circuit board in an electronic device, said package comprising:

a one piece open construction package having end walls, side walls and an open bottom,

a plurality of toroid transformers within said package, said toroid transformers each having a side wall and wires wound thereon,

a plurality of terminal pins molded within and extending through a bottom of said side wall and below the inner portion of said side wall, each of said pins having a hour-glass shaped notched solder post upon which said wires from said transformers are wrapped thereon, respectively,

said end walls having a first height Hi to form a standoff or safe guard between the surface of a printed circuit board and said terminal pins;

the outer portion of said side wall extending between said end walls and having a second height H2 which is less than said first height H1.

* * * * *

EXHIBIT E

US006344785B1

(12) **United States Patent**
Lu et al.

(10) **Patent No.: US 6,344,785 B1**
(45) **Date of Patent: *Feb. 5, 2002**

(54) **ELECTRONIC SURFACE MOUNT PACKAGE**

(75) Inventors: **Peter Lu**, Flower Mound, TX (US); **Jeffrey Heaton**, Cupertino; **James W. Heaton**, Los Altos, both of CA (US); **Peter Loh Hang Pao**, Kowloon (HK); **Robert Loke Hang Lam**, Wonderland Villas (HK); **Tsang Kei Sun**, Kowloon (HK)

(73) Assignee: **Halo Electronics, Inc.**, Redwood City, CA (US)

(*) Notice: This patent issued on a continued prosecution application filed under 37 CFR 1.53(d), and is subject to the twenty year patent term provisions of 35 U.S.C. 154(a)(2).

Subject to any disclaimer, the term of this patent is extended or adjusted under 35 U.S.C. 154(b) by 0 days.

This patent is subject to a terminal disclaimer.

(21) Appl. No.: **08/906,952**

(22) Filed: **Aug. 6, 1997**

Related U.S. Application Data

(63) Continuation of application No. 08/513,573, filed on Aug. 10, 1995, now Pat. No. 5,656,985.

(51) **Int. Cl.**[7] **H01F 27/02**
(52) **U.S. Cl.** **336/96**; 336/90; 336/192
(58) **Field of Search** 336/192, 229, 336/65, 96, 90; 174/52.4, 50; 361/821, 752

(56) **References Cited**

U.S. PATENT DOCUMENTS

3,721,747 A 3/1973 Renskers ..... 174/52 PE
5,034,854 A * 7/1991 Matsumura et al. 336/192

FOREIGN PATENT DOCUMENTS

EP 0 490 438 A1 6/1992 ..... H01F/31/00

OTHER PUBLICATIONS

McCormick; Surface Mount Transformers: A New Packaging Approach; Surface Mount Technology; Feb. 1993; pp. 27–31.
Wyns et al.; PSPICE Simulations and 3D–PCB Transformers for ZVS Full Bridge Converters; The European Power Electronics Association; 1993; pp. 208–214.
EPE'93 Fifth European Conference; Power Electronics and Applications; vol. 3: Electronic Power Supply System; Sep. 13–16, 1993; pp. 215.
Davis; SMT Passive Components Fit Power Electronics Applications; PCIM; Jun. 1993; vol. 19; No. 6; pp. 20–28 and 90.
Osawa; A Superminiaturized Double–Balanced SMT Mixer–Modulator; Microwave Journal; Feb. 1994; pp. 90–97.
Lyons et al.; Printed Circuit Board Magnetics: A New Approach to the Mass Production of Toroidal Transformers; ISHM '95 Proceedings; pp. 53–58.
Derebail et al.; Knowledge Based Adhesive Selection for SMT Assemblies; Proceedings 1995 International Symposium on Microelectronics; Oct. 24–26, 1995; vol. 2649; pp. 1024–1035.

* cited by examiner

Primary Examiner—Anh Mai
(74) *Attorney, Agent, or Firm*—Stephen E. Baldwin

(57) **ABSTRACT**

An electronic surface mount package provides a one piece construction package (with an open bottom) with one or more terminal pins molded into the package. Each of the pins have a notched post upon which a wire is wound which is from a toroid transformer carried within the package. Each of the posts are notched so their respective wires are separate from one another so as to prevent arcing. The case is opened at the bottom which prevents harm from expansion or cracking.

34 Claims, 5 Drawing Sheets

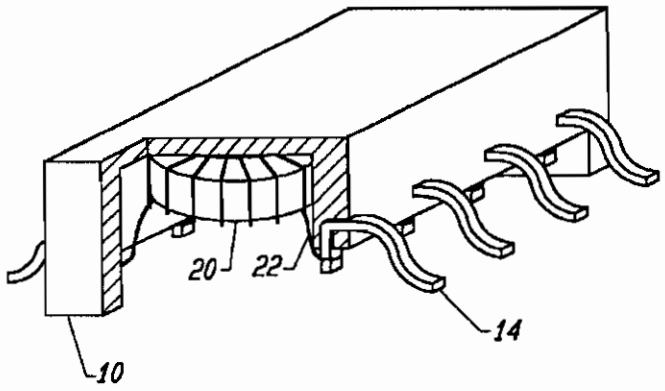

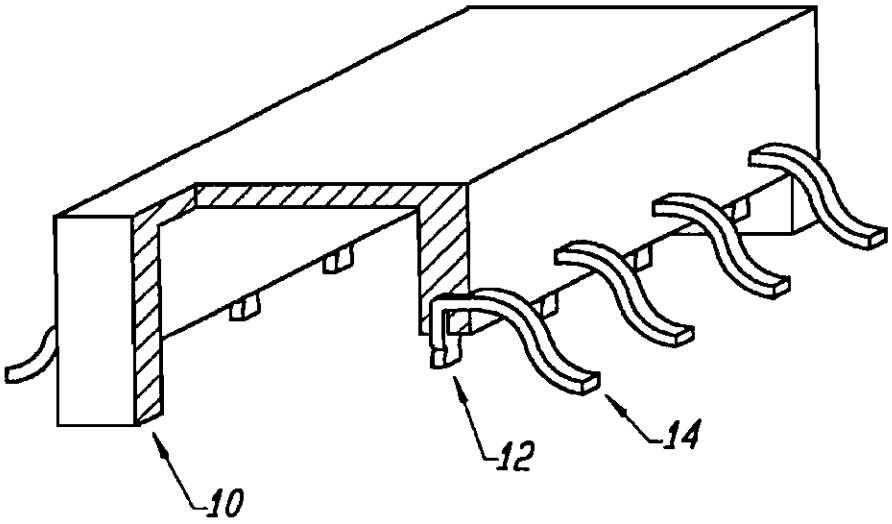

FIG. 1

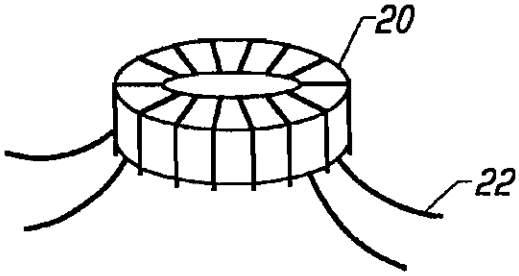

FIG. 2

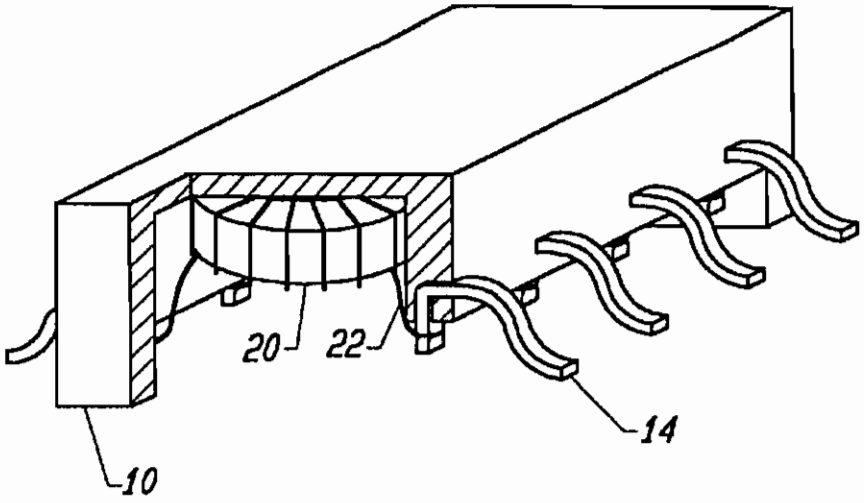

FIG. 3

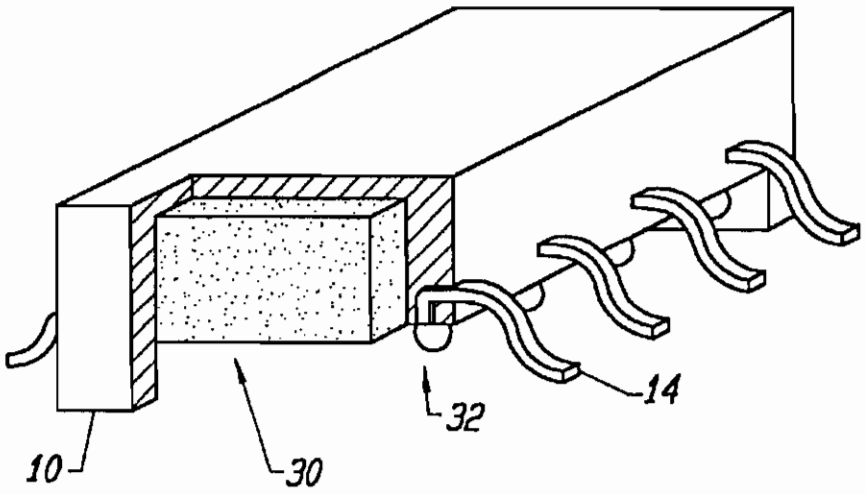

FIG. 4

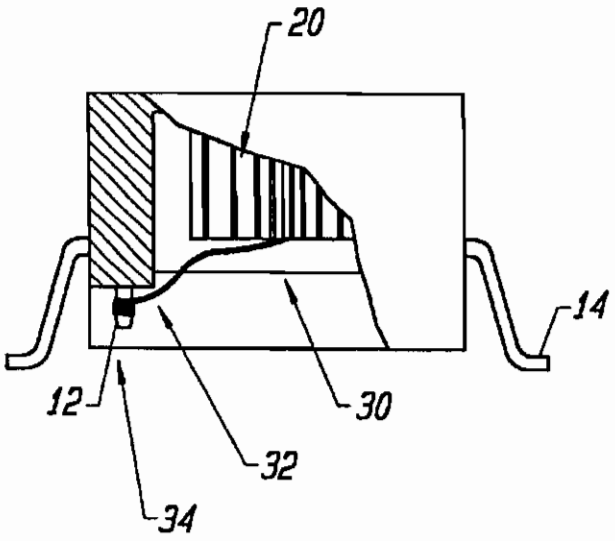

FIG. 5

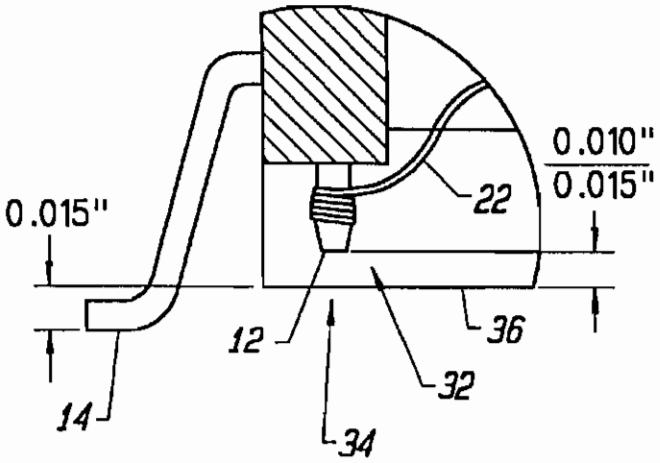

FIG. 6

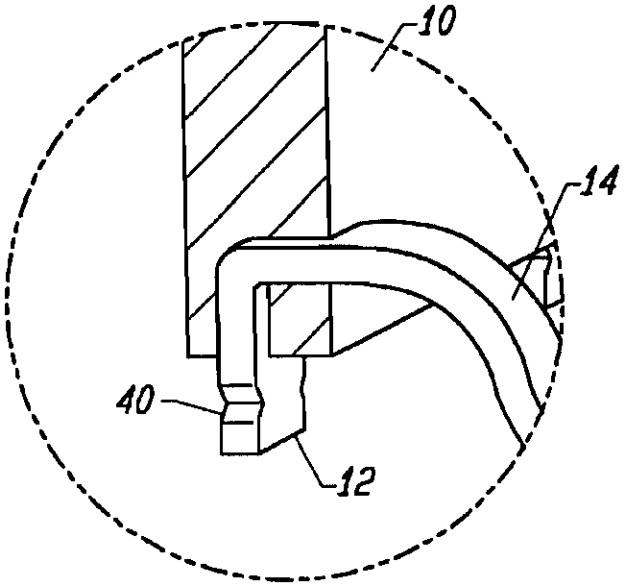

FIG. 7

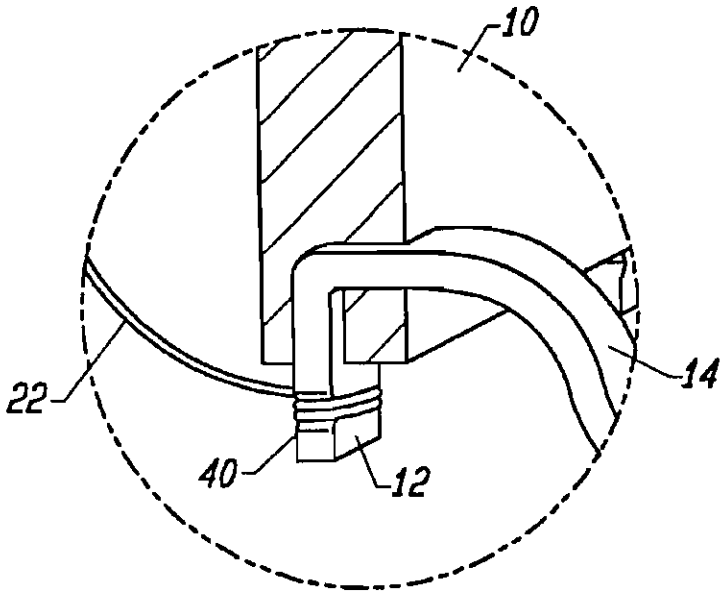

FIG. 8

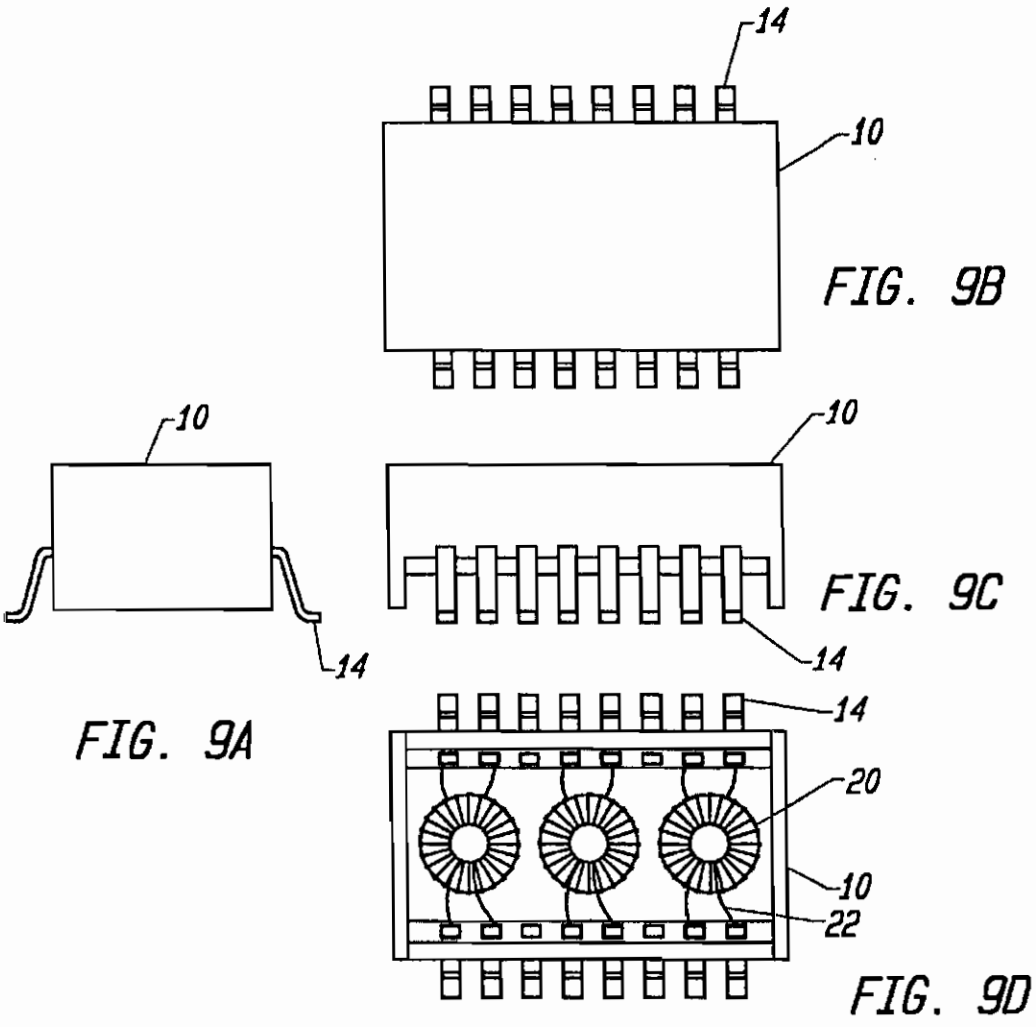

FIG. 9B

FIG. 9C

FIG. 9A

FIG. 9D

ELECTRONIC SURFACE MOUNT PACKAGE

This application is a continuation of Ser. No. 08/513,573 filed on Aug. 10, 1995 U.S. Pat. No. 5,656,985

BACKGROUND OF THE INVENTION

The present invention relates to an electronic surface mount package or case. Electronic surface mount packages are utilized in applications in which one or more individual toroid transformers are embodied within the surface mount package.

Wires coming off the transformers are electronically tied to pins on the package for connection to an electronic device. Typically, the electronic surface mount packages are mounted on a printed circuit board for utilization in the electronic device.

SUMMARY OF THE INVENTION

It is an object of the present invention to provide an improved electronic surface mount package.

Briefly, according to one preferred embodiment, the present invention provides a one piece construction package (with an open bottom) with one or more terminal pins molded into the package. Each of the pins have a notched post upon which a wire is wound which is from a toroid transformer carried within the package. Each of the posts are notched so that the respective wires are separated from one another so as to avoid arcing. The case is open at the bottom which prevents harm from expansion or cracking.

Other objects, features, and advantages of the present invention will become apparent from the following detailed description when taken in conjunction with the accompanying drawings.

BRIEF DESCRIPTION OF THE DRAWINGS

The accompanying drawings, which are incorporated in and form a part of this specification, illustrate embodiments of the invention and, together with the description, serve to explain the principles of the invention:

FIG. **1** shows an electronic surface mount package in three-dimensional view according to the present invention.

FIG. **2** shows a wound toroid transformer.

FIG. **3** shows the connection of the toroid transformer of FIG. **2** within the electronic surface mount package of FIG. **1**.

FIG. **4** shows the electronic surface mount package of FIG. **1** after wire terminations have been soldered.

FIGS. **5** and **6** show relationships between a safeguard (standoff) and the electronic surface-mount package's foot seating plane and inner terminal posts, respectively.

FIG. **7** shows a close-up of the pin configuration of FIG. **1** and how it is molded inside the wall of the body of the package.

FIG. **8** shows wire wrapped around the pin or post of FIG. **7**.

FIGS. **9A–9D** show end, top, side, and bottom views of electronic surface mount package according to the present invention.

DETAILED DESCRIPTION OF THE DRAWINGS

Reference will now be made in detail to the preferred embodiments of the invention, examples of which are illustrated in the accompanying drawings, where like numerals indicate like components. While the invention will be described in conjunction with the preferred embodiments, it will be understood that they are not intended to limit the invention to those embodiments. On the contrary, the invention is intended to cover alternatives, modifications and equivalents, which may be included within the spirit and scope of the invention as defined by the appended claims.

FIG. **1** shows an electronic surface mount transformer package or case **10** in three-dimensional view. FIG. **1** shows a cut-away of the generally rectangular empty case **10** with pins **14** molded into the case **10**, together with notched post **12** upon which a wire is wound. Typically, tin-Lead plated copper alloy terminals are molded into the wall of the package **10**. The outer portion of the package **10** is formed to meet specified footing requirements. The inner post **12** serves as a terminal for internal wire termination use. The package material is made of a type of thermal plastic which is in compliance with UL V-94 requirement for flammability.

FIG. **2** shows a wound toroid transformer **20** with wire **22** wrapped around the transformer **20**. The toroid core is typically made of ferrite or iron material and the winding of wire **22** is done manually with fine insulated magnet wire.

FIG. **3** shows a cut-away of the molded part with the toroid **20** mounted inside and showing the wire **22** as it is then attached to post **14**. The wires **22** are pulled with minimum tension and wrapped around the terminal post **14** for two to two and a half turns. This operation is done when the case has been placed bottom side up.

FIG. **4** shows a silicon compound **30** poured inside the cavity with wire terminations that have been soldered with high temperature solder (95 Ag/5 Sn) **32** and the package has been properly cleaned. The case **10** is then filled with soft silicone material to protect the transformer and to meet environmental requirements.

FIGS. **5** and **6** show the relationships between the safe guard (stand off) **34** and package's foot seating plane and inner terminal posts **12***a*. FIG. **5** shows the standoff **34**, in which the parts typically are placed automatically by machine onto a PC board. They are pressed down, as it is desirable to have some limitation of how far they can be pressed. It is also desirable that the post **12** does not touch the PC board, and so the end standoffs **34** do not allow that to happen.

FIG. **6** shows the distance in relationship between the end of the post **12** and where the PC board **36** is located and also where the standoff **34** ends. The PC board **36** would be at the base of the foot.

In FIG. **6**, the typical clearance of 0.015 inches from the safe guard **34** to the seating plane is to avoid interferenee to the coplanarity of the package. There is also a gap between the safe guard **34** and terminal post **12** to prevent the solder joints from touching the circuit hoard due to an over forced pick and place operation.

Inside the package **10**, there may be two, three, or more individual toroidal transformers. Wires coming off of the transformers are connected to the outside world. For example, the pins may be mounted on a printed circuit board in an electronic device. The lead frame pins are injection molded and the shape of the post upon which the wire is wound from the toroidal transformer is notcbed. This allows for the wires to be separated from pin to pin, and for soldering to be much more efficient.

FIG. **7** shows a closeup of the pin **12** and how pin **12** is molded inside the wall of the body and also the notch effect **40** of the pin **12**. The post **14** is notched so that the wires are kept away from one another (post to post) which is very desirable. The separation is desirable so as to avoid arcing.

FIG. **8** shows the wire **22** wrapped around the pin or post **12**.

FIGS. **9A–9D** show end, top, side, and bottom views, respectively, of the electronic surface mount package **10**. The embodiment shown in FIGS. **9A–9D** provide an industrial standard surface mount footprint and package dimensions which are auto pick and placeable. In addition, special design consideration has been applied to thermal expansion of materials to ensure that the package will stand all normal reflow processes with low cost, easy manufacturing, and high reliability.

In the industry, many manufacturers have used a two-piece construction, a base and a cover, and the case is backfilled with epoxy. In some processes, the coefficients of expansion of the epoxy that has been backfilled, plus the toroid itself, tend to cause the two pieces to separate. The base separates from the top, and as a result, it can end up cracking. The present invention provides a one-piece construction (an open bottom) only with the silicon filling to protect the toroid. The case is open at the bottom, thus allowing for nothing to expand or crack.

The foregoing descriptions of specific embodiments of the present invention have been presented for purposes of illustration and description. They are not intended to be exhaustive or to limit the invention to the precise forms disclosed, and it should be understood that many modifications and variations are possible in light of the above teaching. The embodiments were chosen and described in order to best explain the principles of the invention and its practical application, to thereby enable others skilled in the art to best utilize the invention and various embodiments with various modifications as are suited to the particular use contemplated. It is intended that the scope of the invention be defined by the Claims appended hereto and their equivalents.

What is claimed is:

1. An electronic surface mount package for mounting onto the surface of a printed circuit board comprising:

a side wall with a bottom end,

a plurality of toroid transformers within the package, the toroid transformers each having wires wrapped thereon,

a plurality of terminal pins molded within the side wall, each of the pins extending through the side wall and having a solder post with an end upon which the wires from the transformers are respectively wrapped and soldered thereon, each of the post ends extending beyond the bottom end of the side wall.

2. The package of claim **1** wherein the plurality of toroid transformers are carried within the package by a soft silicone material.

3. The package of claim **1** wherein the side wall has an exterior surface which defines the periphery of the package and each of the solder post ends extends from within the periphery of the package and beyond the bottom of the side wall.

4. The package of claim **1** wherein the side wall defines an interior space within the package and each of the post ends extends from the interior space and beyond the bottom of the side wall.

5. The package of claim **4** wherein each of the solder post ends extends from within the periphery in a direction parallel to the side wall.

6. The package of claim **1** wherein the construction package is one piece.

7. The package of claim **1** wherein each of the pins has a notch near the post end upon which the wires from the transformers are wrapped.

8. The package of claim **1** wherein the posts are separated from one another so as to avoid arcing.

9. An electronic surface mount package for mounting onto the surface of a printed circuit board comprising:

a side wall and a standoff, the standoff defining a foot seating plane for the surface mount of the package, the side wall having a bottom end with an elevation higher than the standoff so as to be above and beyond the foot seating plane;

a plurality of toroid transformers within the package, the toroid transformers each having wires wrapped thereon,

a plurality of terminal pins molded within the package, each of the pins having a solder post with an end upon which the wires from the transformers are respectively wrapped and soldered thereon, the solder post ends extending beyond the bottom end of the side wall to a position above the foot seating plane.

10. The package of claim **9** wherein each of the pins has a notch near the post end upon which the wires from the transformers are wrapped.

11. The package of claim **9** wherein the construction package is one piece.

12. The package of claim **9** wherein the construction package has an open bottom.

13. The package of claim **9** wherein the posts are separated from one another so as to avoid arcing.

14. The package of claim **9** wherein the side wall defines an interior space within the package and each of the post ends extends from the interior space and beyond the bottom of the side wall.

15. The package of claim **14** wherein each of the post ends extends from within the periphery in a direction parallel to the side wall.

16. The package of claim **9** wherein the plurality of toroid transformers are within the package and secured by a soft silicone material.

17. The package of claim **9** wherein the standoff is a pair of end walls with the side wall extending on opposing sides therebetween.

18. An electronic surface mount package for mounting onto the surface of a circuit board, the package comprising:

a side wall having a bottom end;

a standoff for surface mounting the package to the circuit board;

a gap between the bottom end of the side wall and the standoff;

a plurality of toroid transformers within the package, the toroid transformers each having wire wrapped thereon,

a plurality of terminal pins molded within the package, each of the pins having a solder post with an end upon which the wires from the transformers are respectively wrapped and soldered thereon, each of the solder post ends extending into and terminating within the gap.

19. The package of claim **18** wherein the standoff is a pair of end walls with the side wall extending on opposing sides therebetween.

20. The package of claim **18** wherein the construction package is one piece.

21. The package of claim **18** wherein the construction package has an open bottom.

22. The package of claim **18** wherein the posts are separated from one another so as to avoid arcing.

23. The package of claim **18** wherein the side wall defines an interior space within the package and each of the post ends extends from the interior space and beyond the bottom of the side wall.

24. The package of claim 23 wherein each of the post ends extends from within the periphery in a direction parallel to the side wall.

25. The package of claim 18 wherein the plurality of toroid transformers are within the package and secured by a soft silicone material.

26. An electronic surface mount package for mounting onto the surface of a printed circuit board comprising:

a one piece package having an open bottom and a side wall with a bottom end;

a plurality of toroid transformers each having wires wrapped thereon;

means for encapsulating the plurality of toroid transformers within the package;

a plurality of terminal pins molded within and extending from the bottom of the package, each of the pins extending through the side wall and having a solder post with an end upon which the wires from the transformers are respectively wrapped and soldered thereon.

27. The package of claim 26 wherein the standoff is a pair of end walls with tbe side wall extending on opposing sides therebetween.

28. The package of claim 26 wherein each of the post ends extends beyond the bottom end of the side wall.

29. The package of claim 26 wherein the carrying means includes encapsulating the plurality of toroid transformers within the package by a soft silicone material.

30. The package of claim 26 wherein the construction package is one piece.

31. The package of claim 26 wherein the posts are separated from one another so as to avoid arcing.

32. The package of claim 26 wherein the side wall defines an interior space within the package and each of the post ends extends from the interior space and beyond the hottom of the side wall.

33. The package of claim 32 wherein each of the post ends extends from within the peripbery in a direction parallel to the side wall.

34. The package of claim 26 wherein the package includes a standoff defining a foot seating plane for the surface mount of the package, the side wall having a bottom end with an elevation higher than the standoff so as to be above and beyond the foot seating plane, the post ends extending beyond the bottom end of the side wall to a position above the foot seating plane.

* * * * *

EXHIBIT F

US006662431B1

(12) **United States Patent**
Lu et al.

(10) **Patent No.: US 6,662,431 B1**
(45) **Date of Patent: Dec. 16, 2003**

(54) **ELECTRONIC SURFACE MOUNT PACKAGE**

(75) Inventors: **Peter Lu**, Flower Mound, TX (US); **Jeffrey Heaton**, Cupertino, CA (US); **James W. Heaton**, Los Altos, CA (US); **Peter Loh Hang Pao**, Kowloon (HK); **Robert Loke Hang Lam**, Kowloon (HK); **Tsang Kei Sun**, Kowloon (HK)

(73) Assignee: **Halo Electronics, Inc.**, Mt. View, CA (US)

(*) Notice: Subject to any disclaimer, the term of this patent is extended or adjusted under 35 U.S.C. 154(b) by 0 days.

(21) Appl. No.: **10/072,309**

(22) Filed: **Feb. 5, 2002**

Related U.S. Application Data

(63) Continuation of application No. 08/906,952, filed on Aug. 6, 1997, now Pat. No. 6,344,785.

(51) **Int. Cl.**[7] **H01F 7/06**

(52) **U.S. Cl.** **29/602.1**; 29/606; 336/192

(58) **Field of Search** 336/192, 229, 336/65, 96; 29/602.1, 605, 606

(56) **References Cited**

U.S. PATENT DOCUMENTS

3,721,747 A		3/1973	Renskers	
4,687,898 A	*	8/1987	Riordan et al.	219/56.22
4,800,346 A	*	1/1989	Muramatsu et al.	333/140
5,034,854 A		7/1991	Matsumura et al.	

FOREIGN PATENT DOCUMENTS

EP	0 490 438 A1	6/1992

OTHER PUBLICATIONS

McCormick, Surface Mount Transformers: A New Packing Approach, Feb. 1993, pp. 27, 30–31.*

Mc Cormick; Surface Mount Transformers; A New Packaging Approach; Surface Mount Technology; Feb. 1993; pp. 27–31.

Wyns et al.; PSPICE Simulations and 3D–PCB Transformers for ZVS Full Bridge Converters; The European Power Electronics Association; 1993: pp. 208–214.

EPE'93 Fifth European conference; Power Electronics and Applications; vol. 3: Electronic Power Supply System; Sep. 13–16, 1993; p. 215.

Davis; SMT Passive Components Fit Power Electronics Applications; PCIM; Jun., 1993; vol. 19; No. 6; pp. 20–28 and 90.

Osawa; A Superminiaturized Double–Balanced SMT Mixer–Modulator; Microwave Journal; Feb. 1994; pp. 90–97.

Lyons et al. ; Printed Circuit Board Magnetics; A New Approach to the Mass Production of Toroidal Transformers; ISHM '95 Proceedings; pp. 53–58.

Derebail et al.; Knowledge Based Adhesive Selection for SMT Assemblies; Proceedings 1995 International Symposium on Microelectronics; Oct. 14–26, 1995; vol. 2649; pp. 1024–1035.

* cited by examiner

Primary Examiner—Anh Mai
(74) *Attorney, Agent, or Firm*—Stephen E. Baldwin

(57) **ABSTRACT**

An electronic surface mouut package provides a one piece construction package (with an open bottom) with one or more terminal pins molded into the package. Each of the pins have a notched post upon which a wire is wound which is from a toroid transformer carried within the package. Each of the posts are notched so their respective wires are separate from one another so as to prevent arcing. The case is opened at the bottom which prevents harm from expansion or cracking.

5 Claims, 5 Drawing Sheets

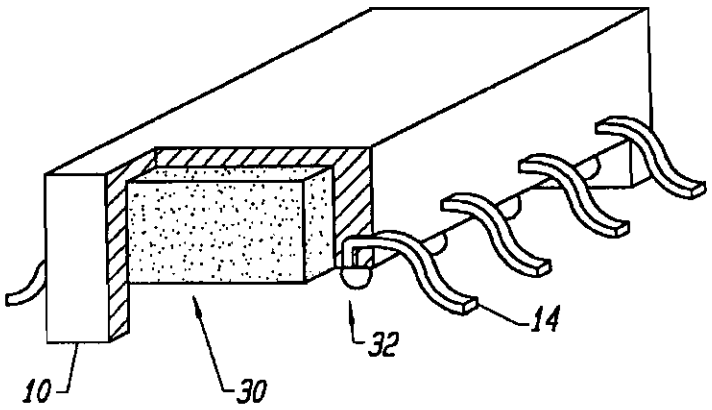

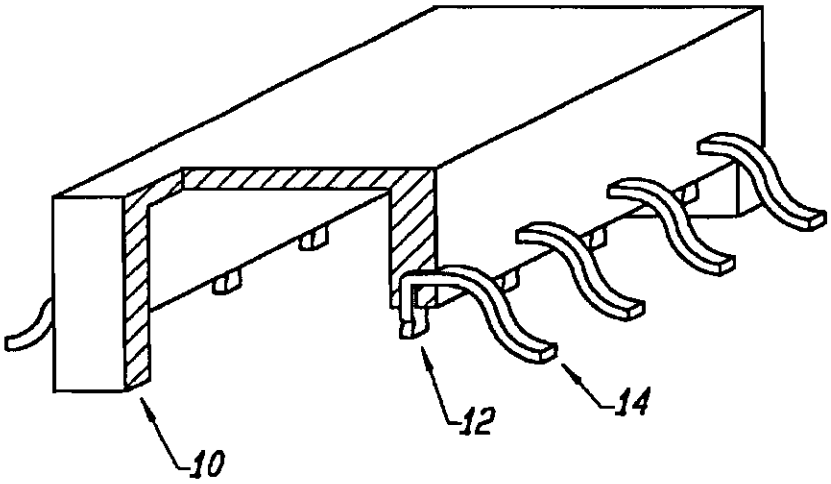

FIG. 1

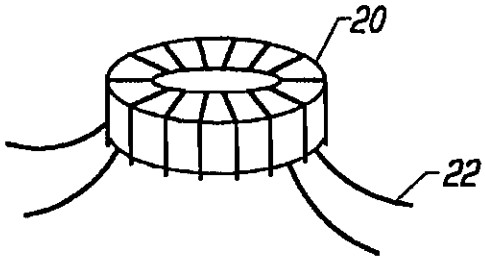

FIG. 2

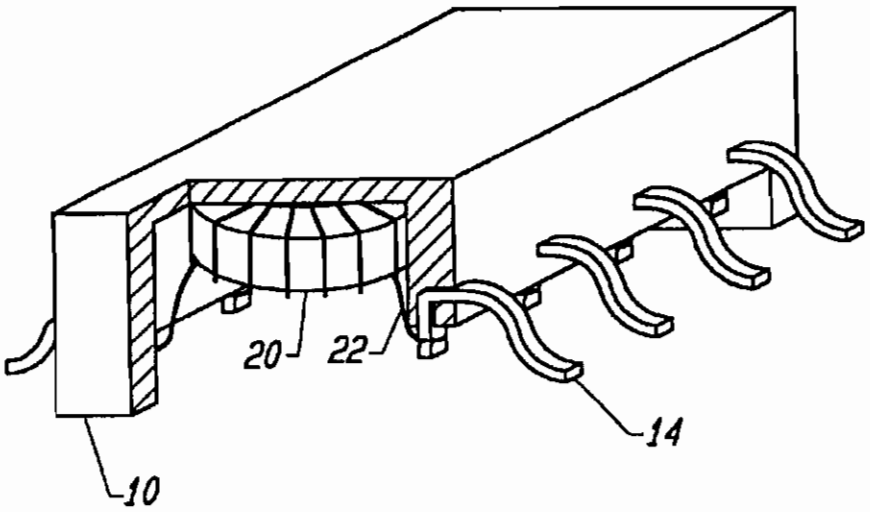

FIG. 3

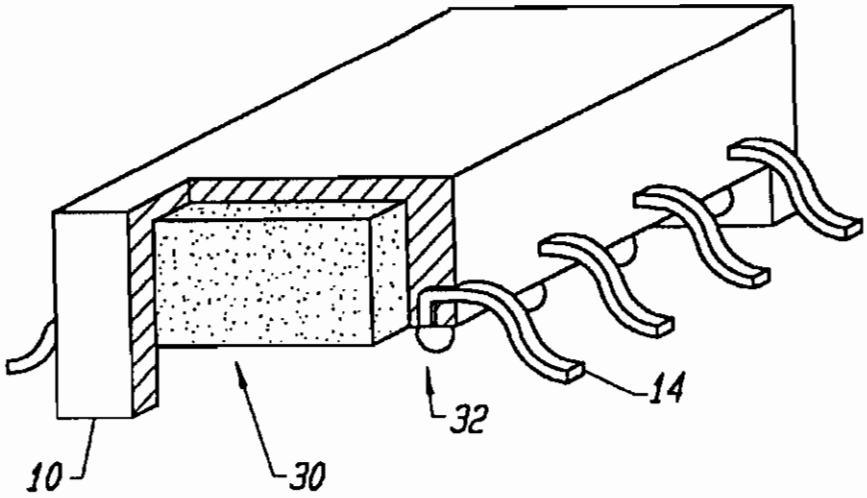

FIG. 4

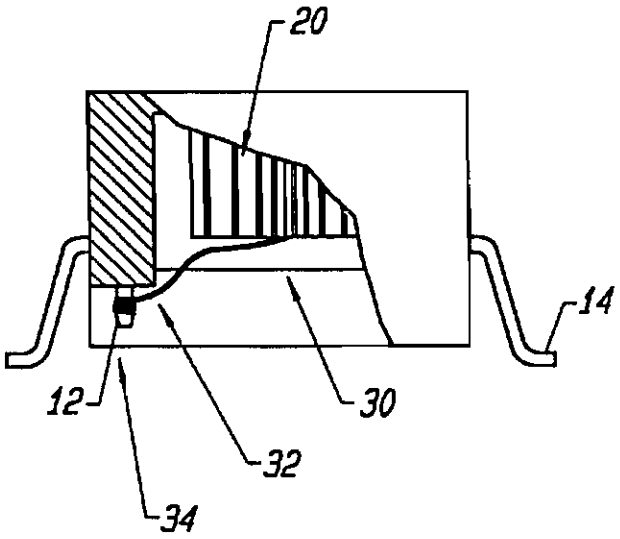

FIG. 5

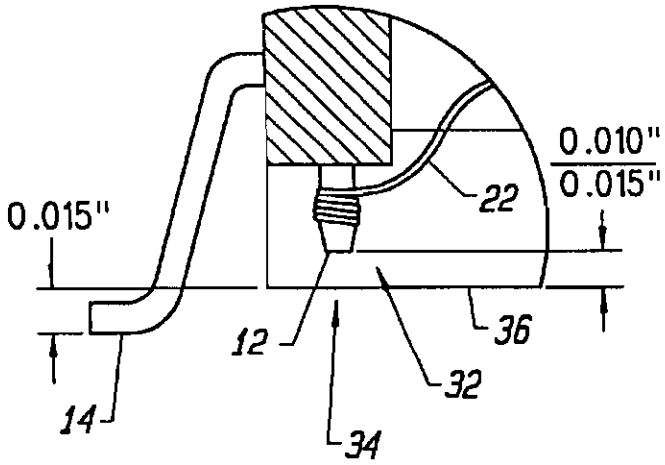

FIG. 6

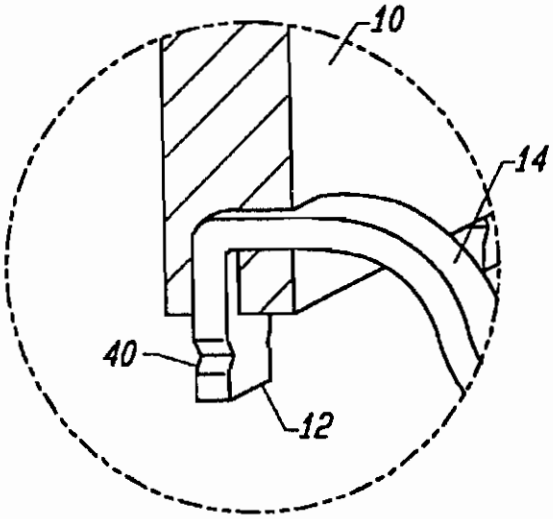

FIG. 7

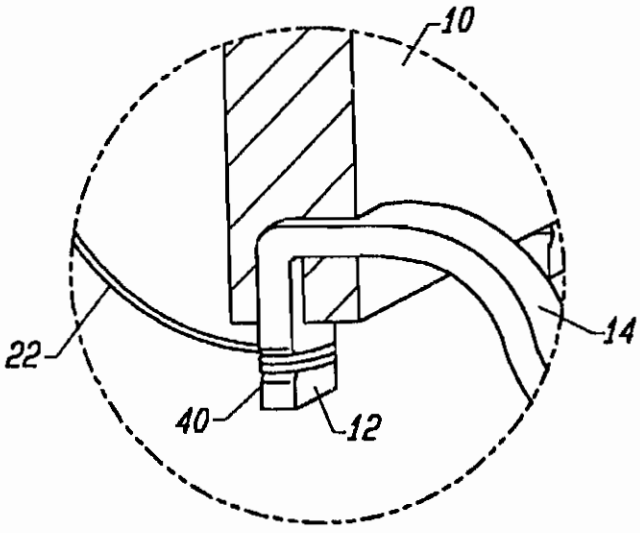

FIG. 8

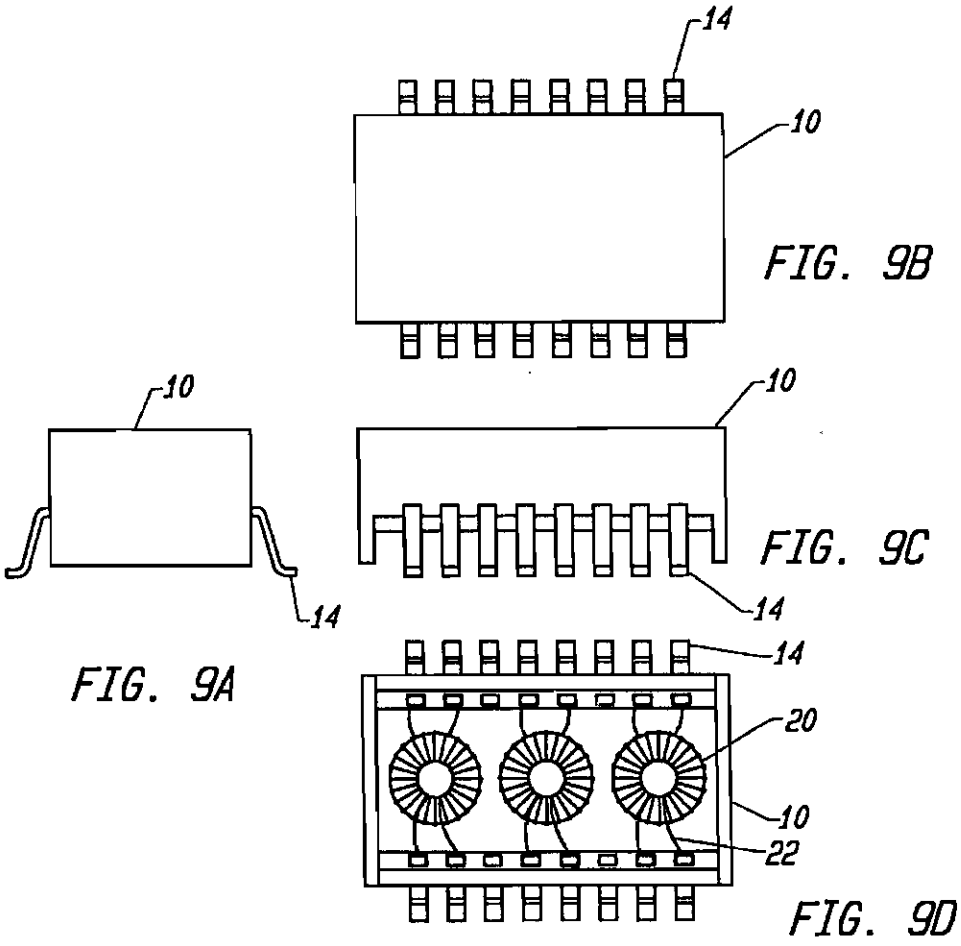

FIG. 9B

FIG. 9C

FIG. 9A

FIG. 9D

ELECTRONIC SURFACE MOUNT PACKAGE

This is a continuation of Ser. No. 08/906,952, filed Aug. 6, 1997 now U.S. Pat. No. 6,344,785.

BACKGROUND OF THE INVENTION

The present invention relates to an electronic surface mount package or case. Electronic surface mount packages are utilized in applications in which one or more individual toroid transformers are embodied within the surface mount package.

Wires coming off the transformers are electronically tied to pins on the package for connection to an electronic device. Typically, the electronic surface mount packages are mounted on a printed circuit board for utilization in the electronic device.

SUMMARY OF THE INVENTION

It is an object of the present invention to provide an improved electronic surface mount package.

Briefly, according to one preferred embodiment, the present invention provides a one piece construction package (with an open bottom) with one or more terminal pins molded into the package. Each of the pins have a notched post upon which a wire is wound which is from a toroid transformer carried within the package. Each of the posts are notched so that the respective wires are separated from one another so as to avoid arcing. The case is open at the bottom which prevents harm from expansion or cracking.

Other objects, features, and advantages of the present invention will become apparent from the following detailed description when taken in conjunction with the accompanying drawings.

BRIEF DESCRIPTION OF THE DRAWINGS

The accompanying drawings, which are incorporated in and form a part of this specification, illustrate embodiments of the invention and, together with the description, serve to explain the principles of the invention:

FIG. **1** shows an electronic surface mount package in three-dimensional view according to the present invention.

FIG. **2** shows a wound toroid transformer.

FIG. **3** shows the connection of the toroid transformer of FIG. **2** within the electronic surface mount package of FIG. **1**.

FIG. **4** shows the electronic surface mount package of FIG. **1** after wire terminations have been soldered.

FIG. **5** and **6** show relationships between a safeguard (standoff) and the electronic surface-mount package's foot seating plane and inner terminal posts, respectively.

FIG. **7** shows a close-up of the pin configuration of FIG. **1** and how it is molded inside the wall of the body of the package.

FIG. **8** shows wire wrapped around the pin or post of FIG. **7**.

FIGS. 9A–9D show end, top, side, and bottom views of electronic surface mount package according to the present invention.

DETAILED DESCRIPTION OF THE DRAWINGS

Reference will now be made in detail to the preferred embodiments of the invention, examples of which are illustrated in the accompanying drawings, where like numerals indicate like components. While the invention will be described in conjunction with the preferred embodiments, it will be understood that they are not intended to limit the invention to those embodiments. On the contrary, the invention is intended to cover alternatives, modifications and equivalents, which may be included within the spirit and scope of the invention as defined by the appended claims.

FIG. **1** shows an electronic surface mount transformer package or case **10** in three-dimensional view. FIG. **1** shows a cut-away of the generally rectangular empty case **10** with pins **14** molded into the case **10**, together with notched post **12** upon which a wire is wound. Typically, tin-Lead plated copper alloy terminals are molded into the wall of the package **10**. The outer portion of the package **10** is formed to meet specified footing requirements. The inner post **12** serves as a terminal for internal wire termination use. The package material is made of a type of thermal plastic which is in compliance with UL V-94 requirement for flammability.

FIG. **2** shows a wound toroid transformer **20** with wire **22** wrapped around the transformer **20**. The toroid core is typically made of ferrite or iron material and the winding of wire **22** is done manually with fine insulated magnet wire.

FIG. **3** shows a cut-away of the molded part with the toroid **20** mounted inside and showing the wire **22** as it is then attached to post **14**. The wires **22** are pulled with minimum tension and wrapped around the terminal post **14** for two to two and a half turns. This operation is done when the case has been placed bottom side up.

FIG. **4** shows a silicon compound **30** poured inside the cavity with wire terminations that have been soldered with high temperature solder (95 Ag/5Sn) **32** and the package has been properly cleaned. The case **10** is then filled with soft silicone material to protect the transformer and to meet environmental requirements.

FIGS. **5** and **6** show the relationships between the safe guard (stand off) **34** and package's foot seating plane and inner terminal posts **12***a*. FIG. **5** shows the standoff **34**, in which the parts typically are placed automatically by machine onto a PC board. They are pressed down, as,it is desirable to have some limitation of how far they can be pressed. It is also desirable that the post **12** does not touch the PC board, and so the end standoffs **34** do not allow that to happen.

FIG. **6** shows the distance in relationship between the end of the post **12** and where the PC board **36** is located and also where the standoff **34** ends. The PC board **36** would be at the base of the foot.

In FIG. **6**, the typical clearance of 0.015 inches from the safe guard **34** to the seating plane is to avoid interference to the coplanarity of the package. There is also a gap between the safe guard **34** and terminal post **12** to prevent the solder joints from touching the circuit board due to an over forced pick and place operation.

Inside the package **10**, there may be two, three, or more individual toroidal transformers. Wires coming off of the transformers are connected to the outside world. For example, the pins may be mounted on a printed circuit board in an electronic device. The lead frame pins are injection molded and the shape of the post upon which the wire is wound from the toroidal transformer is notched. This allows for the wires to be separated from pin to pin, and for soldering to be much more efficient.

FIG. **7** shows a closeup of the pin **12** and how pin **12** is molded inside the wall of the body and also the notch effect **40** of the pin **12**. The post **14** is notched so that the wires are kept away from one another (post to post) which is very desirable. The separation is desirable so as to avoid arcing.

FIG. 8 shows the wire 22 wrapped around the pin or post 12.

FIGS. 9A–9D show end, top, side, and bottom views, respectively, of the electronic surface mount package 10. The embodiment shown in FIGS. 9A–9D provide an industrial standard surface mount footprint and package: dimensions which are auto pick and placcable. In addition, special design consideration has been applied to thermal expansion of materials to ensure that the package will stand all normal reflow processes witb low cost, easy manufacturing, and high reliability.

In the industry, many manufacturers have used a two-piece construction, a base and a cover, and the case is backfilled with epoxy. In some processes, the coeffieients of expansion of the epoxy that has been backfilled, plus the toroid itself, tend to cause the two pieces to separate. The base separates from the top, and as a result, it can end up cracking. The present invention provides a one-piece construction (an open bottom) only with the silicon filling to protect the toroid. The case is open at the bottom, thus allowing for nothing to expand or crack.

The foregoing descriptions of specific embodiments of the present invention have heen presented for purposes of illustration and description. They are not intended to be exhaustive or to limit the invention to the precise forms disclosed, and it should be understood that many modifications and variations are possible in light of the above teaching. The embodiments were chosen and described in order to best explain the principles of the invention and its practical application, to thereby enahle others skilled in the art to best utilize the invention and various embodiments with various modifications as are suited to the particular use contemplated. It is intended that the scope of the invention be defined by the claims appended hereto and their equivalents.

What is claimed is:

1. A method of making an electronic surface mount package, the method comprising the steps for:

forming a package having a side wall with a bottom end;

encapsulating a plurality of toroid transformers within the package with a resilient material;

molding a plurality of terminal pins within the side wall, each of the pins extending through the side wall and having a solder post end, each of the post ends extending beyond the bottom end of tbe side wall; and

wrapping and soldering the wires from the transformers to the solder post ends for each of the pins.

2. The method of claim 1 wherein tbe resilient material is a soft silicone material.

3. A method of making an electronic surface mount package, the method comprising the steps for:

molding a one piece construction package having a side wall with a bottom end and a plurality of terminal pins within and extending from the bottom of the package;

encapsulating and carrying a plurality of toroid transformers within the package; and

wrapping and soldering the wires from the transformers to an end of a solder post for each of the pins.

4. The metbod of claim 3 wherein the step for encapsulating and carrying the plurality of toroid transformers pours a resilient material into the package and subsequently sets the resilient material.

5. The method of claim 3 wherein the resilient material is a soft silicone material.

* * * * *

EXHIBIT B

Gary L. Koenigsberg
WOLF, BLOCK, SCHORR AND SOLIS-COHEN LLP
A Pennsylvania Limited Liability Partnership
101 Eisenhower Parkway
Roseland, NJ 07068
(973) 228-5700
Attorneys for Plaintiff,
Bel Fuse, Inc.

Joshua L. Raskin
WOLF, BLOCK, SCHORR AND SOLIS-COHEN LLP
A Pennsylvania Limited Liability Partnership
250 Park Avenue
New York, NY 10017
(212) 986-1116
Attorneys for Plaintiff,
Bel Fuse, Inc.

UNITED STATES DISTRICT COURT
FOR THE DISTRICT OF NEW JERSEY

BEL FUSE, INC. Plaintiff, v. HALO ELECTRONICS, INC. Defendant.	CIVIL ACTION NO. **COMPLAINT**

Plaintiff, Bel Fuse, Inc., by and through its undersigned counsel, for its Complaint against defendant, Halo Electronics Inc., alleges the following upon information and belief, except as to those allegations concerning Bel Fuse, Inc., which are alleged upon knowledge.

THE PARTIES

1. Plaintiff Bel Fuse, Inc. ("plaintiff" or "Bel Fuse") is a corporation organized and existing under the laws of the State of New Jersey with its principal place of business at 206 Van Vorst Street, Jersey City, New Jersey.

2. Defendant Halo Electronics, Inc. ("defendant" or "Halo") is a corporation organized and existing under the laws of the state of Nevada with its principal place of business at 1861 Landings Drive, Mountain View, California.

JURISDICTION AND VENUE

3. This is an action for patent infringement arising under the patent laws of the United States, 35 U.S.C. §§ 100 *et seq.* This Court has jurisdiction over the subject matter of the claim asserted herein pursuant to 28 U.S.C. §§ 1331 and 1338.

4. This Court has personal jurisdiction over Halo because Halo is doing business within this State and judicial district, transacts business within this State and judicial district, has sold and is selling allegedly infringing products into this State and judicial district, derives substantial revenue from intra-state commerce and is otherwise within the jurisdiction of this Court.

5. Venue is proper in this judicial district under 28 U.S.C. §§ 1391(b) and (c) because a substantial part of the events giving rise to the claims occurred in this district, Halo may be found in this judicial district, and Halo is subject to personal jurisdiction in this judicial district. Venue is also proper in this judicial district under 28 U.S.C. § 1400(b).

COUNT I
(Patent Infringement)

6. Bel Fuse restates and realleges the preceding paragraphs of this Complaint.

7. This claim arises under the Patent Laws of the United States, 35 U.S.C. § 1 *et. seq.*, including 35 U.S.C. § 271, and is for willful patent infringement.

8. On April 7, 1998, U.S. Patent No. 5,736,910 ("the '910 patent") was duly and legally issued by the United States Patent and Trademark Office. A true and correct copy of the '910 patent is attached hereto as Exhibit A.

9. Bel Fuse is the assignee of all rights, title, and interest in and to the '910 patent and possesses all rights of recovery under the '910 patent.

10. Halo has been and is infringing, actively inducing others to infringe, and/or contributing to the infringement of the '910 patent.

11. As a direct and proximate result of Halo's acts of infringement, Bel Fuse has suffered damages and is entitled to recover an amount adequate to compensate for the infringement under 35 U.S.C. § 284, which amount is to be determined at trial.

12. Halo has had, at all relevant times, actual and constructive notice that its conduct infringed on the claims of the '910 patent but nevertheless continued its infringing conduct. Halo's infringement has been, and continues to be, willful and, therefore, Bel Fuse is entitled to treble damages under 35 U.S.C. § 284.

13. This is an exceptional case under 35 U.S.C. § 285 which entitles Bel Fuse to an award of reasonable attorneys' fees.

14. Halo will continue infringing the '910 patent unless enjoined from further infringement by this Court.

PRAYER FOR RELIEF

WHEREFORE, Bel Fuse prays for judgment and relief as follows:

A. A judgment that Halo has infringed and continues to infringe claims of the '910 patent;

B. An order, pursuant to 35 U.S.C. § 283, permanently enjoining and restraining Halo and its officers, directors, principals, agents, servants, employees, successors and assigns, and all those in active concert or participation with each of the foregoing, from infringing – and from contributing to and/or inducing the infringement of – any claims of the '910 patent;

C. An order, pursuant to 35 U.S.C. § 284, that Halo account to Bel Fuse for an amount adequate to compensate Bel Fuse for damages sustained from Halo's infringing acts, which amount is to be determined, and that said amount be trebled pursuant to 35 U.S.C. § 284;

D. An order, pursuant to 35 U.S.C. § 285, that Halo pay Bel Fuse its reasonable attorneys' fees in connection with this action;

E. A judgment that costs of this action be awarded to Bel Fuse;

F. An order that Halo pay Bel Fuse prejudgment and post-judgment interest at the highest statutory rate on Bel Fuse's damages, costs and attorneys' fees; and

G. An order awarding Bel Fuse such other and further relief as may be deemed by this Court to be just and proper.

JURY DEMAND

Bel Fuse hereby demands trial by jury on all issues so triable.

WOLF BLOCK SCHORR AND
SOLIS-COHEN, LLP

By: _____

Gary L. Koenigsberg
101 Eisenhower Parkway
Roseland, NJ 07068

Joshua L. Raskin
250 Park Avenue
New York, NY 10017

Attorneys for Plaintiff
Bel Fuse, Inc.

Dated: May 8, 2007

EXHIBIT A

US005736910A

United States Patent [19]

Townsend et al.

[11] Patent Number: 5,736,910

[45] Date of Patent: Apr. 7, 1998

[54] **MODULAR JACK CONNECTOR WITH A FLEXIBLE LAMINATE CAPACITOR MOUNTED ON A CIRCUIT BOARD**

[75] Inventors: **Peter K. Townsend**, Camp Hill; **Ted R. Meckley**, Seven Valleys; **David Hatch**, Glen Rock; **Don McClune**; **Robert J. Brennan**, both of York, all of Pa.

[73] Assignee: **Stewart Connector Systems, Inc.**, Glen Rock, Pa.

[21] Appl. No.: **561,931**

[22] Filed: **Nov. 22, 1995**

[51] **Int. Cl.**[6] **H03H 7/09**

[52] **U.S. Cl.** **333/181**; 333/185; 439/620

[58] **Field of Search** 333/172, 181, 333/182, 183, 184, 185; 361/301.1, 301.2, 301.3, 301.4, 301.5; 439/620

[56] **References Cited**

U.S. PATENT DOCUMENTS

3,353,124	11/1967	Dilger	333/172
3,996,537	12/1976	Neuman	333/181
4,263,549	4/1981	Toppeto	336/176 X
4,384,263	5/1983	Neuman et al.	333/181
4,622,526	11/1986	Schneider et al.	333/181
4,695,115	9/1987	Talend	333/184 X
4,726,638	2/1988	Farrar et al.	333/185 X
4,761,623	8/1988	Schneider	333/167
4,772,224	9/1988	Talend	439/607
4,863,401	9/1989	Talend	439/610
4,930,200	6/1990	Brush, Jr. et al.	333/185 X
5,244,412	9/1993	Hatch et al.	439/567
5,277,625	1/1994	Ianella et al.	439/620
5,321,372	6/1994	Smith	333/1
5,337,028	8/1994	White	333/185 X
5,420,553	5/1995	Sakamoto et al.	333/181 X
5,495,213	2/1996	Ikeda	333/185 X

FOREIGN PATENT DOCUMENTS

298282	7/1954	Switzerland	361/301.4
483480	4/1938	United Kingdom	361/301.3

Primary Examiner—Robert Pascal
Assistant Examiner—Justin P. Bettendorf
Attorney, Agent, or Firm—Steinberg, Raskin & Davidson, P.C.

[57] **ABSTRACT**

A modular jack connector mounted on a main printed circuit board and having a receptacle into which a modular plug of an electronic component is inserted. The connector includes a housing, a first set of contacts arranged in the housing each adapted to engage one of the contacts of the plug, a second set of contacts at least partially arranged in the housing and adapted to engaging the main printed circuit board, contact coupling circuit means for electrically coupling the first and second sets of contacts, a capacitor for providing impedance to high frequency noise and interference and a metallic shield at least partially surrounding the housing and connected to a grounding region on the main printed circuit board. In one embodiment, the capacitor is a flexible laminate assembly including first and second conductive sheet members and an intermediate insulative material. Further, the capacitor has a plurality of folded pleats including a first pleat arranged at one end of the laminate assembly and a second pleat arranged at an opposite end of the laminate assembly. The first conductive sheet member is electrically coupled at the first pleat to the contact coupling circuit means, and the second conductive sheet member is electrically coupled at the second pleat to the metallic shield to thereby ground the first set of contacts through the capacitor. The contact coupling circuit means may include toroidal coil pairs which function separately as either a differential mode filter or a common mode filter.

22 Claims, 6 Drawing Sheets

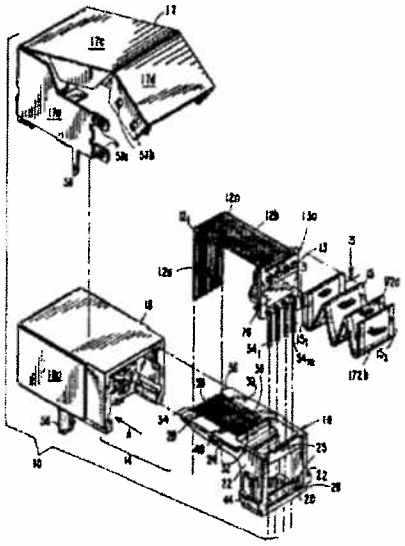

FIG. 1

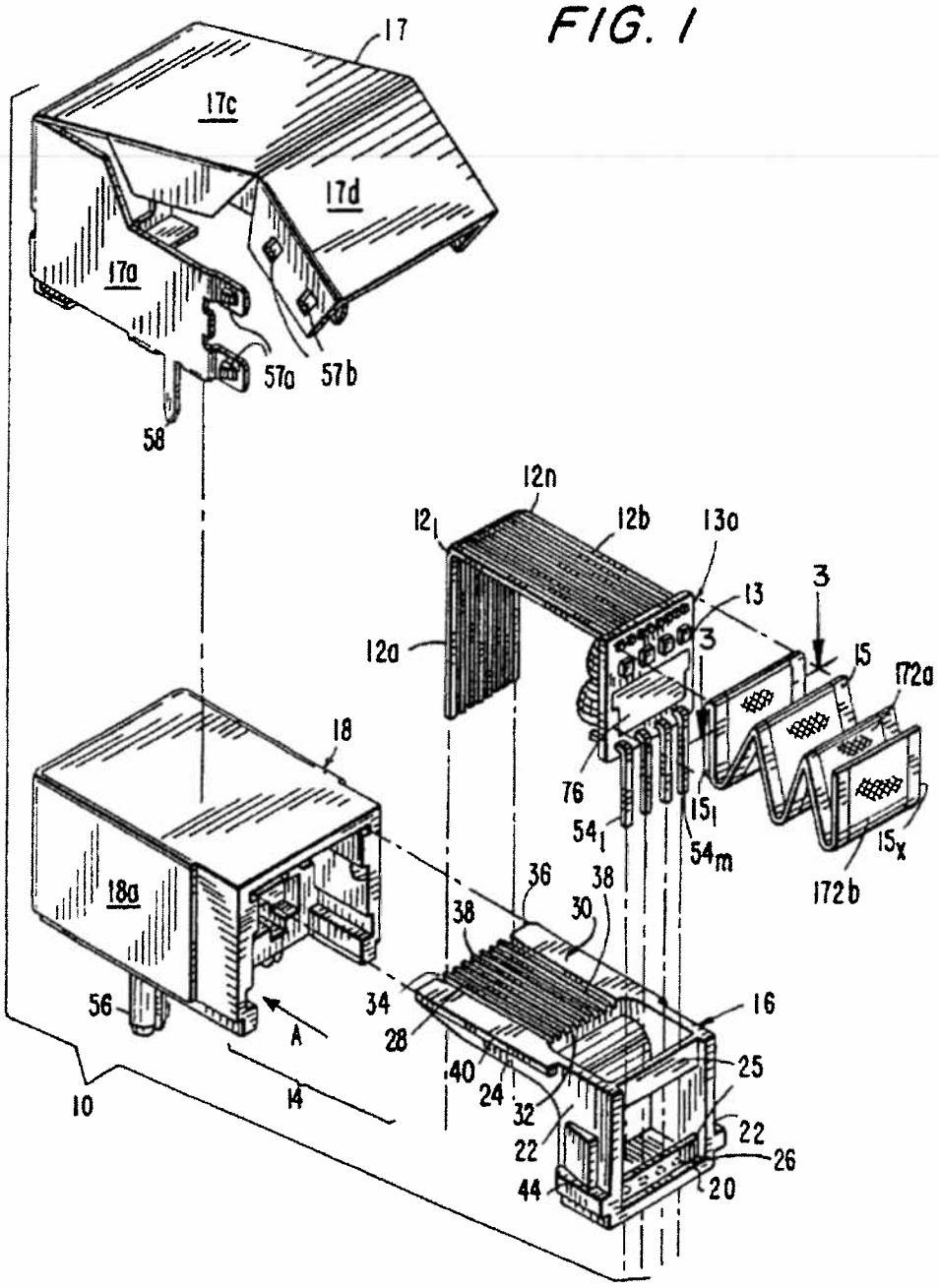
17
17c
17d
17a
57a
57b
58
12n
12l
12b
13a
13
3
12a
15
172a
18
76
54l
15l
54m
15x
172b
18a
36
38
38
30
56
34
16
A
28
25
40
24
32
22
22
26
44
20
10
14

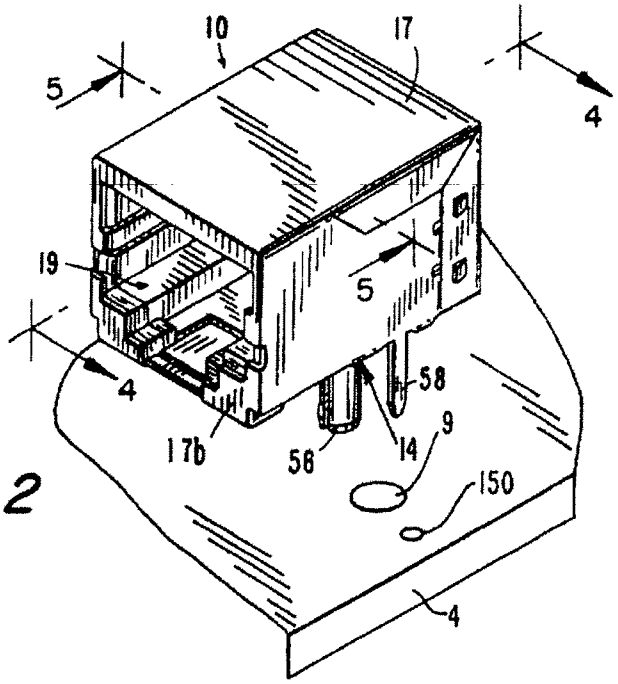

FIG. 2

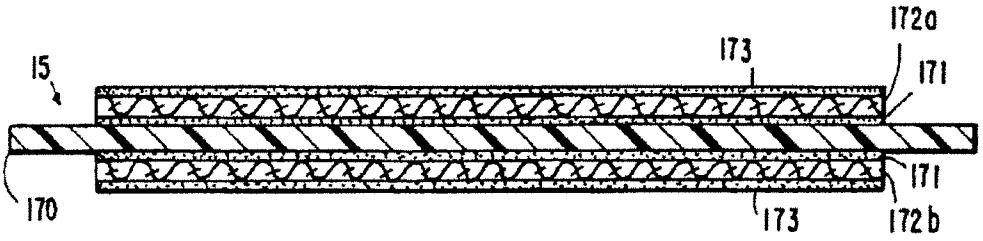

FIG. 3

FIG. 4

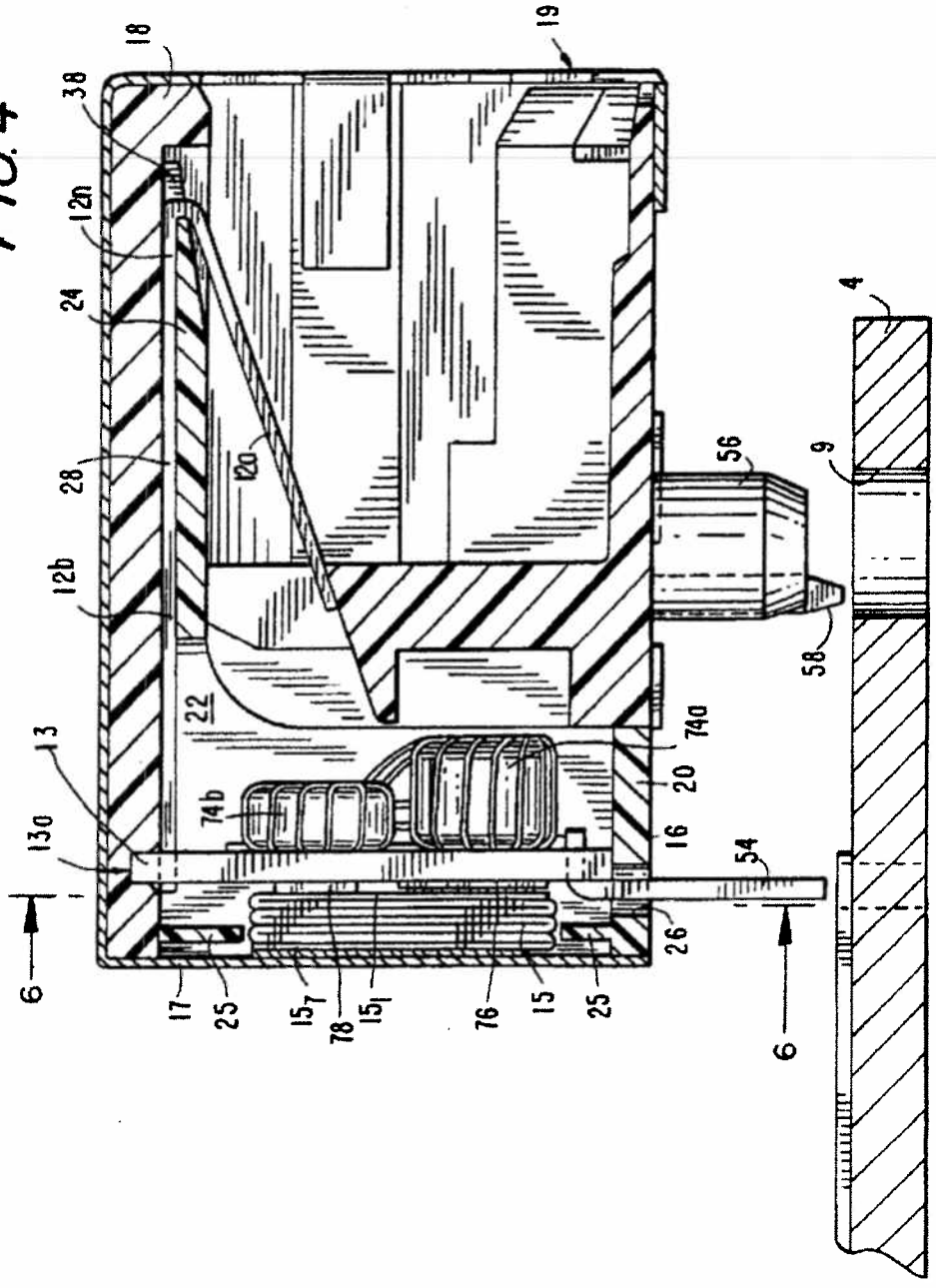
18
19
38
12a
24
28
12b
22
13
13a
74b
74a
20
16
54
56
9
4
58
26
6
6
17
25
15
78
15
76
15
25

FIG. 5

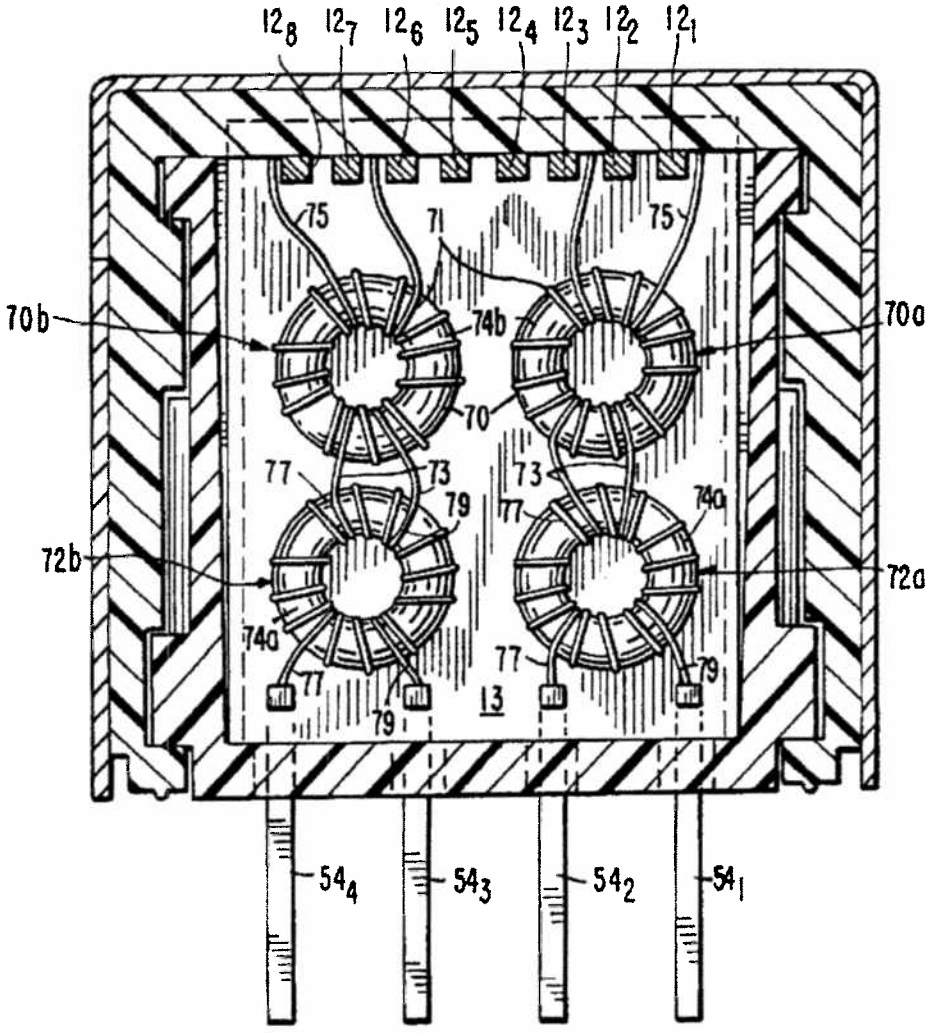
12₈ 12₇ 12₆ 12₅ 12₄ 12₃ 12₂ 12₁
75
71
75
70b
74b
70a
70
77
73
73
79
77
74a
72b
72a
74a
77
77
79
79
13
54₄
54₃
54₂
54₁

FIG. 6

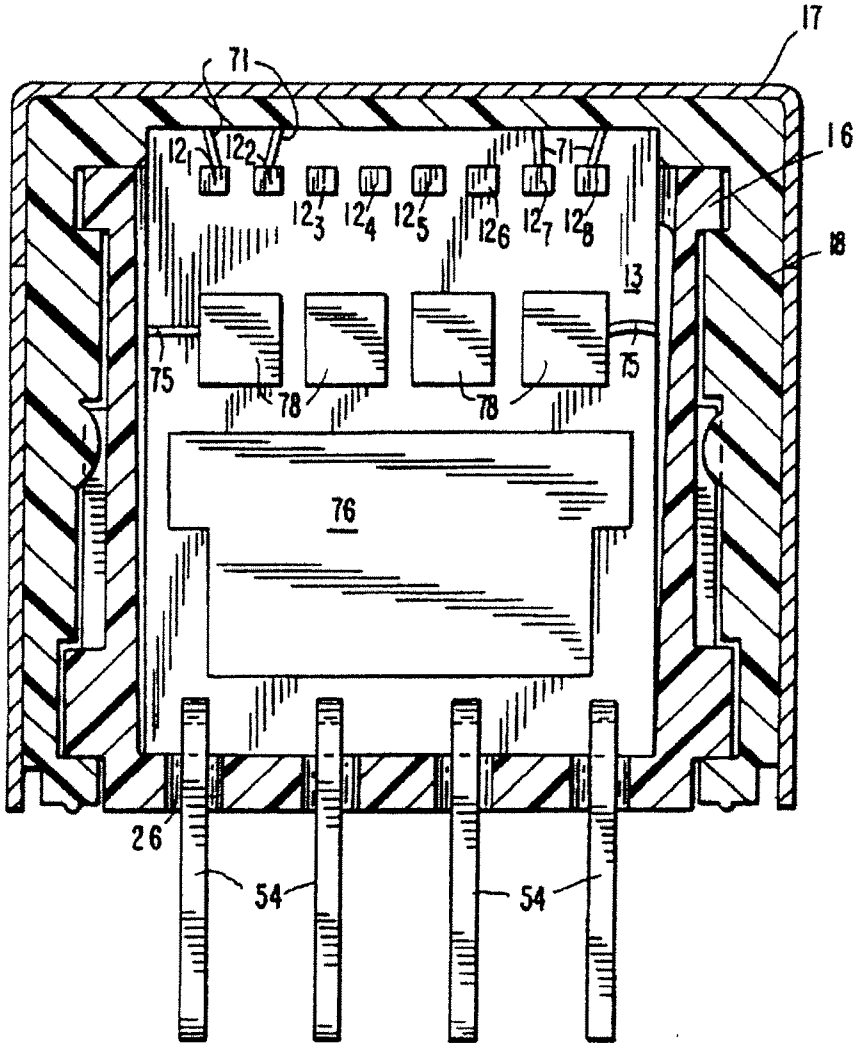

FIG. 7

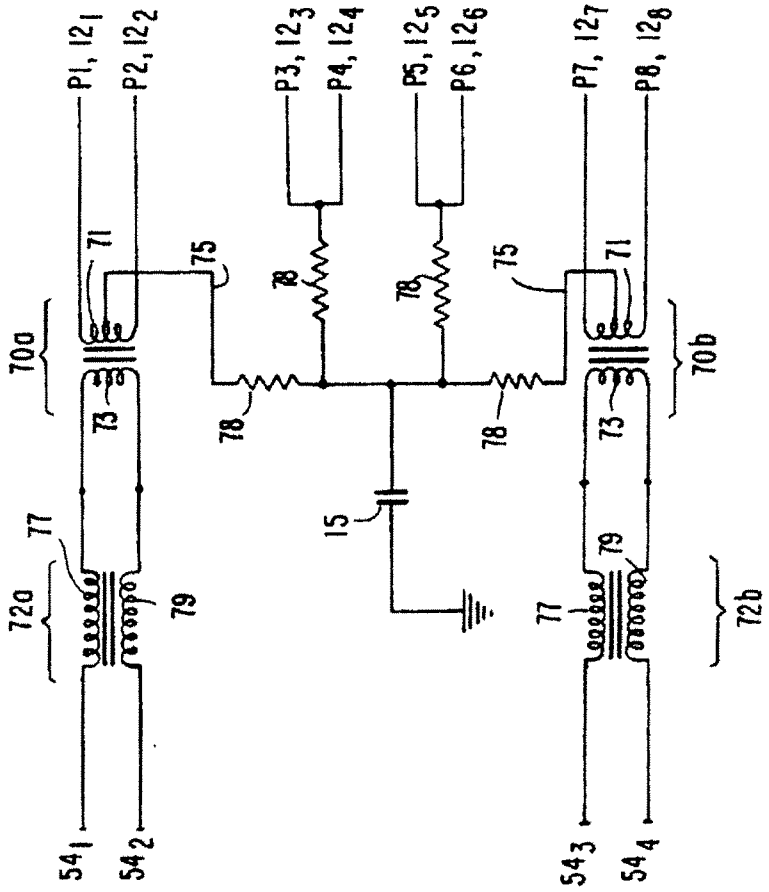
P1, 12 1
P2, 12 2
P3, 12 3
P4, 12 4
P5, 12 5
P6, 12 6
P7, 12 7
P8, 12 8
71
75
78
70a
70b
73
15
77
79
72a
72b
54 1
54 2
54 3
54 4

EXHIBIT A

continued

MODULAR JACK CONNECTOR WITH A FLEXIBLE LAMINATE CAPACITOR MOUNTED ON A CIRCUIT BOARD

FIELD OF THE INVENTION

The present invention relates generally to modular jack connectors designed to be mounted on printed circuit boards and, more particularly, to modular jack connectors including components for filtering common and differential mode interference and for eliminating high frequency noise.

BACKGROUND OF THE INVENTION

Electrical devices are frequently subject to adverse operation in the presence of radio frequency interference in the electrical lines connecting the devices to, e.g., data communication lines. The electrical devices are not only susceptible to such interference, they also function as a source of such interference. Filters must therefore be interposed between connected electrical devices to screen out the interference and minimize its effect on the operation of the electrical devices.

This interference may cause two types of distortion of the power circuit wave form, viz., common mode interference where identical wave forms are impressed on the electrical lines connecting the electrical devices, and differential mode interference which appears as a voltage difference between the connecting electrical lines. Circuitry exists to filter radio frequency interference, but for optimum effectiveness and cost, it has been found to be more efficient to treat the two types of interference independently, i.e., to provide one group of electrical components to serve as a common mode filter and another group of electrical components to serve as a differential mode filter.

Since electrical devices are often coupled by modular jack connectors, it is desirable to construct modular jack connectors with integral filter components to avoid the need for additional, external filter components.

In addition, it is desirable for modular jack connectors mounted on printed circuit boards to eliminate noise and interference present in the electrical connection between the plug received in the jack and the printed circuit on which the jack is mounted. To this end, it has been suggested that line-to-ground capacitors be incorporated in the connector to provide low impedance to high frequencies between the lines and ground.

One such connector is described in U.S. Pat. No. 4,695,115 (Talend). Talend discloses a modular jack in which bypass capacitors engage the contacts in order to pass noise and other high frequency signals to ground. The capacitors are end-mounted ceramic capacitors (tombstone capacitors) and are coupled at one end to contacts in the jack at a location between a terminal mating portion of the contacts and the portion of the contacts that engage a printed circuit board. The capacitors are connected at their other end to a conductive member which in turn is coupled to a grounding region on the printed circuit board so that the capacitors operatively ground the contacts.

It is a disadvantage of the structure of the Talend jack that the capacitance is limited since the size of the ceramic capacitors cannot be increased without correspondingly increasing the size of the jack. Since it is desirable for the jack to have a low profile and to be as small as possible and within industry standards, this prior art jack is not entirely satisfactory. Further, the direct connection between the capacitors and the contacts detrimentally affects the intended signal passing through the contacts.

OBJECTS AND SUMMARY OF THE INVENTION

It is an object of the present invention to provide a new and improved modular jack.

Another object of the present invention is to provide a new and improved modular jack incorporating line filters and bypass capacitors.

Still another object of the present invention is to provide a practical and efficient solution to the connection of a capacitor to electrical current paths through a connector in order to ground the current paths.

It is another object of the present invention to provide a modular jack with capacitance means in which the disadvantages of the prior art modular jacks are substantially eliminated.

It is yet another object of the present invention to provide a modular jack with capacitance means, the capacitance of which is significantly greater than the capacitance of bypass capacitors of prior art jacks, and wherein the size of the modular jack is small and within industry standards.

In accordance with the present invention, these and other objects are attained by providing a modular jack comprising a housing, a first set of contacts for engaging the contacts of a mating plug connector, a second set of contacts for engaging the circuit of the printed circuit board on which the jack is mounted, circuit means for electrically coupling contacts of the first set to contacts of the second set, a capacitor formed of flexible sheet-like materials, preferably formed into a plurality of folded pleats, and a metallic shield at least partially surrounding the housing and electrically coupled to a ground region of the printed circuit board on which the jack is mounted. The capacitor includes two conductive sheet members and an intermediate insulative material. A first one of the conductive sheet members in the capacitor is coupled at one of the extreme capacitor pleats to contacts of the first set and a second one of the conductive sheet members in the capacitor engages the metallic shield at the other extreme capacitor pleat to thereby ground the first set of contacts through the pleated capacitor to eliminate high frequency noise and interference. In a preferred embodiment, the contact coupling circuit means includes a circuit board component arranged within the jack housing. To provide common and differential mode interference filtering, a plurality of toroidal coil pairs are mounted on the circuit board component in the contact coupling circuit means. A first group of the toroidal coil pairs functions as a common mode filter and a second group of the toroidal coil pairs functions as a differential mode filter.

In accordance with another embodiment of the invention, the contacts of the first set of contacts are coupled in pairs to each other and each contact pair is coupled to a capacitor, such as the pleated capacitor described above, through a respective resistor. Only after passing through one of the resistors does the electrical signal from the first set of contacts reach the capacitor. By means of this construction, the capacitor constitutes a center point or center mode or center tap for each pair of contacts of the first set of contacts and establishes a 0-value common mode voltage at the output terminals of the connector. The interposition of a resistor between the capacitor and each pair of contacts of the first set of contacts which engage the contacts of the modular plug provides balanced signal pairs and a balanced circuit without adversely affecting the signal.

It is also significant that only a single capacitor is required in a jack connector according to the invention since each of

the contact pairs is connected to the capacitor via a respective resistor and the contact coupling circuit means. Thus, the need for multiple capacitors is avoided.

The jack housing may be provided with any conventional mounting arrangement for mounting the jack on a printed circuit board, such as the arrangement described in U.S. Pat. No. 5,244,412, the specification of which is hereby incorporated by reference.

In an eight position jack according to the invention, i.e., having eight contacts in the first set, adapted to be coupled to a modular plug having only four signal-carrying contacts, only four contacts of the first set are coupled by the contact coupling circuit means to four contacts of the second set. The four remaining unused contacts of the first set are connected in pairs to each other, and each pair of unused contacts is coupled to the capacitor which functions to ground the unused contacts thereby filtering noise and interference. In this embodiment, a resistor may be used to couple each connected pair of unused contacts to the capacitor, in addition to the use of a resistor between coupled pairs of the used contacts of the first set and the capacitor, to provide a balanced circuit.

BRIEF DESCRIPTION OF THE DRAWINGS

Additional objects of the invention will be apparent from the following description of the preferred embodiment thereof taken in conjunction with the accompanying non-limiting drawings, in which:

FIG. 1 is an exploded perspective view of a connector in accordance with the invention;

FIG. 2 is a perspective view of the connector of FIG. 1;

FIG. 3 is a sectional view of the capacitor component of the connector taken along line 3—3 of FIG. 1;

FIG. 4 is a sectional view of the connector taken along line 4—4 of FIG. 2;

FIG. 5 is a sectional view of the connector taken along line 5—5 of FIG. 2;

FIG. 6 is a sectional view of the connector taken along line 6—6 of FIG. 4; and

FIG. 7 is a circuit diagram of a jack connector in accordance with the invention.

DETAILED DESCRIPTION OF THE PREFERRED EMBODIMENT

Referring now to FIGS. 1-7 of the drawings wherein like reference characters designate identical or corresponding parts throughout the several views, an embodiment of a device in accordance with the present invention is the form of a modular jack connector **10**, adapted to couple an electronic device to the circuit of a printed circuit board through a modular plug connector, comprises a two-part housing **14** formed of an insulative material, such as plastic, a first set of conductive contacts comprising a plurality of contacts $12_1, \ldots, 12_n$, a second set of contacts $54_1, \ldots, 54_m$, a circuit board assembly **13***a* comprising circuit means for electrically coupling the contacts **12** of the first set to the contacts **54** of the second set, a capacitor **15** formed of flexible sheet-like materials formed into a plurality of folded pleats $15_1, \ldots, 15_x$ and a metallic shield **17** which at least partially surrounds the housing **14**. The housing **14** includes a first inner housing part **16** and a second outer housing part **18** which together define a receptacle **19** adapted to receive a modular plug. A leg portion **12***a* of each of the first contacts $12_1, \ldots, 12_n$ engages a respective contact of the modular plug received within the receptacle **19**.

Referring to FIGS. **1**, **4**, **5** and **6**, the inner housing part **16** is formed of an insulative plastic material and has a substantially L-shaped configuration including a framework section comprising a transverse base portion **20** and a pair of side portions **22** projecting upward from both sides of the base portion **20** (FIG. 1), and a guide section **24** extending forwardly from the top of the framework section in a cantilever fashion. The rear side of the framework section of the inner housing part **16** is partially closed by a pair of transverse upper and lower walls **25** extending between the side portions **22**. A significant open space is defined at the rear side of the framework section of the inner housing part **16** between upper and lower walls **25**.

A plurality of substantially parallel guide slots or channels **28** are formed in the top surface **30** of the guide section **24** of the inner housing part **16** and each channel **28** is receivable of a leg portion **12***b* of one of the contacts $12_1, \ldots, 12_n$ (FIG. 1). Each channel **28** opens at its rearward end **32** at the open top of the framework section of inner housing part **16** and terminates at its forward end **34** which is recessed rearwardly of the forward edge **36** of the guide section **24** to form fingers **38**.

As best seen in FIGS. **1** and **4**, each of the first set of contacts $12_1, \ldots, 12_n$ has a first leg portion **12***a* extending through the receptacle **19** (FIG. 4) formed in the interior of the housing **14** for engaging a respective one of the plug contacts. The second leg portion **12***b* of each of the contacts $12_1, \ldots, 12_n$ is positioned in a respective one of the channels **28**. The rear end of the second leg **12***b* of each contact **12** is attached, e.g., by soldering, to a circuit board component **13** of the circuit board assembly **13***a*. The upper end of each contact $54_1, \ldots, 54_m$ of the second set of contacts is connected to the circuit board component **13** and each second contact **54** extends through a respective bore **26** formed in the base portion **20** for connection at its lower end to the printed circuit board **4** (FIG. 4).

The contact coupling circuit means that couple the contacts **12** of the first set to the contacts **54** of the second set are situated within the framework section of the inner housing part **16**. The contact coupling means includes the circuit board component **13** having a printed circuit including a contact element **76** (FIG. 1) and four toroidal coil pairs **70***a*,**70***b*,**72***a*,**72***b* (FIG. 5) mounted on one side of the circuit board componcat **13**. Each of the toroidal coil pairs **70***a*,**70***b* comprises a toroidal core **74***b* and two coils **71**,**73** wound around the core **74***b*. Each of the toroidal coil pairs **72***a*,**72***b* comprises a toroidal core **74***a* and two coils **77**,**79** wound around the core **74***a*.

Referring to FIGS. **5** and **7**, one end of coil **71** of toroidal coil pair **70***a* is connected to the contact 12_1 and the other end of coil **71** is connected to the contact 12_2. Thus, contacts 12_1,12_2 are coupled to each other via coil **71**. Similarly, contacts 12_7,12_8 are coupled to each other via coil **71** of the toroidal coil pair **70***b*. The other coil **73** of each of the toroidal coil pairs **70***a*,**70***b* is connected at one end to a coil **79** of a respective one of the toroidal coil pairs **72***a*,**72***b* and at its other end to the coil **77** of the respective one of the toroidal coil pairs **72***a*,**72***b*. Coils **77**,**79** are connected at their other ends to respective ones of the contacts **54** of the second set of contacts, i.e., coil **79** of toroidal coil pair **72***a* is connected to contact 54_1, coil **77** of toroidal coil pair **72***a* is connected to contact 54_2, coil **79** of toroidal coil pair **72***b* is connected to contact 54_3, coil **77** of toroidal coil pair **72***b* is connected to contact 54_4. Thus, as best seen in the circuit diagram shown in FIG. 7, contacts **54** are coupled in pairs to each other via coils **77** of the toroidal coil pairs **72***a*,**72***b* which are connected to coils **73** of the toroidal coil pairs

70a,70b which in turn are connected to coils 79 of the toroidal coil pairs 72a,72b.

Coils 71,73 are wound around respective toroidal cores 74b in a specific manner and incorporated into the contact coupling circuit means so that their current-induced inductive fluxes are additive. As such, toroidal coil pairs 70a,70b function as differential mode filters. Coils 77,79 of the toroidal coil pairs 72a,72b are wound around toroidal core 74a inductively opposite to each other and are equal in number of turns so that their current-induced fluxes substantially cancel each other. In this case, toroidal coil pairs 72a,72b thus function as common mode filters. Toroidal coil pairs 72a,72b are smaller in size than toroidal coil pairs 70a,70b since while the toroidal coil pairs 70a,70b must comply with ETHERNET specifications and have a minimum inductance value, there is no standard industry specification for toroidal coil pairs 72a,72b which function as common mode filters.

With respect to the arrangement of coils on toroidal cores to form toroidal coil pairs which function as either common mode filters or differential mode filters, reference is made to U.S. Pat. Nos. 3,996,537 and 4,263,549. The specifications of these references are incorporated by reference.

As seen most clearly in FIGS. 1 and 3, the capacitor 15 is a continuous, flexible, elongate laminate assembly formed of a laminate of a sheet 170 of insulative material such as CAPTON™ and a pair of flexible conductive sheet members 172a,172b formed of wire mesh attached to respective sides of the sheet 170 by conductive adhesive means, such as conductive paste 171 (FIG.3). An insulative coating 173, such as non-conductive paste, is applied to the outer surface of both the sheet members 172a,172b with regions of the first and last pleats left exposed. In the illustrated embodiment, the capacitor laminate assembly was folded to form seven substantially equal sections or folded pleats 15_1, . . . , 15_x, where x=7. An exposed region of the conductive sheet member 172a of the first pleat 15_1 is adjacent to and attached to the contact element 76 arranged on the circuit board component 13 and an exposed region of the conductive sheet member 172b of the last pleat 15_7 is attached to an inner surface of the metallic shield 17 (FIG. 4).

Although the capacitor laminate assembly in the illustrated embodiment has six folds defining seven pleats, the number of pleats in the capacitor 15 depends on the capacitance to be obtained and the dimensions of the conductive sheet members 172a,172b and the sheet 170 of insulative material. Thus, the capacitor 15 may even be an unfolded flexible laminate assembly provided the capacitance provided thereby is sufficient to enable effective operation of the connector.

The capacitor 15 must have an odd number of pleats, e.g., seven as shown, in order to maintain the proper polarity to ground, i.e., the sheet member 172a must be electrically coupled to the circuit means coupled to contacts 12 and the sheet member 172b must be electrically coupled to the metallic shield 17.

The construction of the capacitor 15 in this manner, that is as a flexible laminate assembly formed in a plurality of folded pleats, provides significant advantages in the construction and operation of the connector 10. In particular, it enables a significant increase in the capacitance which can be provided in the small space occupied by the capacitor and existing in the interior of the connector. In an experimental embodiment, over 100 Pf of capacitance was obtained by making a five-pleated capacitor from 0.340×2.0 inches of copper sheet mesh with 0.4×2.0 inches of CAPTON™ film. The thickness of the capacitor was about 0.124 inches, the sheet members 172a,172b having a thickness of about 0.0016 inches, the CAPTON™ sheet 170 having a thickness of about 0.005 inches, the layer of conductive paste 171 between the sheet members 172a,172b and the CAPTON™ sheet 170 having a thickness of about 0.0014 inches and the layer of non-conductive paste 173 on the outer surface of at least one of the sheet members 172a,172b having a thickness of about 0.0014 inches.

Referring now to FIG. 6, the circuit board component assembly 13a also includes four resistors 78 mounted on an opposite side of the circuit board component 13 from the side on which the toroidal coil pairs 70a,70b,72a,72b are mounted. The contact element 76, to which the capacitor 15 is connected via conductive adhesion means, is also arranged on the same side of the circuit board component 13 as the resistors 78 and is coupled to resistors 78 by the circuitry of circuit board 13. The circuit of the circuit board component 13 provides an electrical connection from each of the resistors 78 to the capacitor contact element 76 to which the capacitor 15 is mounted.

In one embodiment of the invention, a resistor 78 is provided for each pair of contacts 12 of the first set. Each resistor is coupled between each pair of contacts 12 and the capacitor 15 to provide balanced signal pairs and a balanced circuit without adversely affecting the signal.

FIG. 7 illustrates a circuit diagram of the components of an eight position jack, i.e., a jack having eight contacts 12_1, . . . , 12_8, in accordance with the invention which is adapted to be coupled to a printed circuit board 4 having only four signal-carrying contacts. Therefore, only four contacts 12_1, 12_2,12_7,12_8 of the first set are coupled by the contact coupling circuit means to four contacts of the second set 54_1, . . . , 54_4. The four unused contacts 12_3, . . . , 12_6 of the first set are connected in pairs, 12_3 and 12_4, 12_5 and 12_6, via the appropriate electrical connections on the circuit board component 13 and then each pair is connected to a resistor 78. On the other hand, electrical connections, which may be wires 75, are provided (shown in dotted lines in FIGS. 5 and 6) to couple the resistors 78 which are coupled to the contacts 12_1,12_2,12_7,12_8 to a respective one of the coils 71.

The contacts 12_3,12_4 are thus connected to each other and to a single resistor 78 and similarly, the contacts 12_5,12_6 are connected to each other and to another resistor 78. Contacts 12_7,12_4,12_5,12_6 are unused and filtered. Coil 71 of the first toroidal coil pair 70a connects contacts 12_1 and 12_2 and another coil 71 of the second toroidal coil pair 70b connects contacts 12_7,12_8. Wires 75 connect each of the coils 71 to one of the resistors 78. The circuitry on circuit board component 13 includes connections between each of the resistors 78 and capacitor 15. All of the contacts 12_1, . . . , 12_8 are thus electrically coupled to the capacitor 15 via the resistors 78. In view of this arrangement, the current path from each pair of the contacts 12 is directed to the capacitor 15 only through one of the resistors 78 providing for balanced signal pairs.

Referring again to FIG. 1, the assembly of the jack 10 will now be described. The contacts 12_1, . . . , 12_n are initially pre-formed with the first and second leg portions 12a,12b as shown in FIG. 1. The circuit board component assembly 13a is also pre-assembled with its electrical-circuit-containing circuit board component 13, and the toroidal coil pairs 70a,70b,72a,72b, wires 75, capacitor contact element 76 and resistors 78 mounted on the circuit board component 13 and the pad-engaging contacts 54_1, . . . , 54_m and contacts 12_1, . . . , 12_n connected thereto. Upon insertion of the circuit

board assembly 13*a* into the framework of the inner housing part 16, the pad-engaging contacts 54 are inserted through aligned bores 26 in the base portion 20 of the inner housing part 16 and the legs 12*b* of contacts $12_1, \ldots, 12_n$ are inserted into respective ones of the channels 28 in the guide portion 24 of the inner housing part 16 such that the first leg portions 12*a* thereof extend beyond the forward edge of the channels 28.

The sub-assembly of the inner housing part 16, circuit board assembly 13*a* and contacts $12_1, \ldots, 12_n$ is then inserted into the rearward space within outer housing part 18 in the direction of arrow A as shown in FIG. 1. During insertion, the mating contact portions, i.e., the first leg portions 12*a* of contacts $12_1, \ldots, 12_n$, are aligned with respective guide slots formed in the outer housing part 18 between partitions and engage a surface whereby the first leg portions 12*a* are bent into the shape shown in FIG. 4 as insertion of the inner housing part 16 into the outer housing part 18 continues. Other details of the assembly of the inner housing part 16 into the outer housing part 18 can be found in U.S. Pat. No. 5,244,412 referenced above.

Mesh sheet 172*a* at the first pleat 15_1 of the pleated capacitor 15 is electrically connected to the contact element 76 of the circuit board component 13 by means of a conductive adhesive.

The metallic shield 17 is then applied over the outer housing part 18 of the housing 14 to surround at least a portion of the housing 14 once the capacitor 15, circuit board assembly 13*a* and contacts $12_1, \ldots, 12_n$ are secured in the housing 14. To this end, the metallic shield 17 is constructed with folds corresponding to the edges of the outer housing part 18. To apply the metallic shield 17 about housing 14, first side portions 17*a* (only one of which is shown in FIG. 1) and a front portion 17*b* (FIG. 2) of the metallic shield 17 are positioned abutting corresponding surfaces of the outer housing part 18, i.e., the metallic shield 17 is placed over the outer housing part 18 so that side portions 17*a* engage side portions 18*a* of the housing and the front portion 17*b* of the metallic shield 17 engages with the front, substantially open side of the outer housing part 18 (See FIG. 2). Then, the top surface 17*c* of the metallic shield 17 is brought into engagement with the top surface of the outer housing part 18. Conductive adhesive is applied to connect the parts of the metallic shield 17 to the outer surfaces of the housing 14.

Mesh sheet 172*b* at the last pleat 15_n of the pleated capacitor 15 is electrically connected to the rear surface 17*d* of the metallic shield by means of a conductive adhesive.

The rear surface 17*d* of the metallic shield 17 is bent about the fold between the rear surface 17*d* and the top surface 17*c* to close a rear side of the outer housing part 18, i.e., that side of the outer housing part 18 which is open, through which the inner housing part 16 is inserted into the outer housing part 18 and at which the capacitor 15 is positioned. The rear surface 17*d* of the metallic shield 17 is attached to the side portions 17*a* of the shield 17 by cooperating fastening members 57*a*,57*b* to securely close the shield 17 about the housing 14. In this manner, only a lower portion of the housing 14 and the receptacle 19 for entry of the modular plug are exposed (as shown in FIG. 2) and are not covered by the metallic shield 17. The jack connector 10 is then attached to the printed circuit board 4 by inserting the mounting posts 56 into holes 9 in the printed circuit board 4.

Electrical connection of the metallic shield 17 to the printed circuit board 4 is facilitated by metallic tabs 58 extending from the lower surface of the side portions 17*a* of the metallic shield 17. Tabs 58 are soldered to a grounding region 150 (FIG. 2) on the printed circuit board 4 to operatively ground the metallic shield 17 and thus ground the first set of contacts $12_1, \ldots, 12_n$ coupled thereto through the capacitor 15 and the circuit board component 13.

The examples provided above are not meant to be exclusive. Many other variations of the present invention would be obvious to those skilled in the art, and are contemplated to be within the scope of the appended claims. For example, although in the illustrated embodiment a printed circuit board component is contained within the connector, in a more basic embodiment, it is possible to dispense with the printed circuit board component and toroidal coil pairs attached thereto, and to connect the pleated capacitor via resistors to the contacts themselves or to some electrical coupling means which couple the contacts which engage the contacts of the mating plug and the contacts which engage the printed circuit board. Also, it is possible to dispense with the circuit board component altogether and to mount the toroidal coil pairs, resistors, capacitor and contact coupling circuit means on the housing, e.g., interior walls of the housing.

We claim:

1. A modular connector for mounting on a main printed circuit board and for receiving a plug, comprising

a housing,

a first set of contacts arranged in said housing each adapted to engage one of the contacts of the plug,

a second set of contacts at least partially arranged in said housing and adapted to engage the main printed circuit board,

a contact coupling printed circuit board for electrically coupling said first and second sets of contacts, said contact coupling printed circuit board providing a signal path between respective ones of the first and second sets of contacts,

a capacitor comprising a flexible laminate assembly including first and second flexible conductive sheet members and an intermediate insulative material, said first conductive sheet member being electrically coupled to said contact coupling printed circuit board, and

a metallic shield at least partially surrounding said housing for connecting to a grounding region on the main printed circuit board, said second conductive sheet member being electrically coupled to said metallic shield to thereby ground said first set of contacts through said capacitor.

2. The connector of claim 1, wherein said contact coupling printed circuit board is arranged in said housing, said first and second sets of contacts being connected to said contact coupling printed circuit board, and further including

a plurality of toroidal coil pairs mounted on said contact coupling printed circuit board and coupled to said first and second sets of contacts, a first group of said toroidal coil pairs functioning as a common mode filter and a second group of said toroidal coil pairs functioning as a differential mode filter.

3. The connector of claim 1, wherein said contact coupling printed circuit board includes a plurality of toroidal coil pairs coupled to said first and second sets of contacts, a first group of said toroidal coil pairs functioning as a common mode filter and a second group of said toroidal coil pairs functioning as a differential mode filter.

4. The connector of claim 1, further comprising a plurality of resistors, at least a portion of said resistors being coupled to said contact coupling printed circuit board.

5. The connector of claim 4, wherein said contact coupling circuit printed circuit board couples pairs of said first set of contacts, each pair of contacts of said first set of contacts being coupled to said capacitor through one of said resistors.

6. The connector of claim 4, wherein said housing comprises a receptacle having eight contacts, said first set of contacts comprising four of said eight contacts, said resistors comprising four resistors, said contacts of said first set of contacts being coupled in pairs through one of said resistors to said capacitor and said four contacts not constituting said first set of contacts being coupled in pairs through one of said resistors to said capacitor such that balanced signal pairs are provided.

7. The connector of claim 4, wherein the plurality of resistors are mounted on said contact coupling printed circuit board.

8. The connector of claim 1, wherein said capacitor has a plurality of folded pleats including a first pleat arranged at one end of said laminate assembly and a second pleat arranged at an opposite end of said laminate assembly, said first conductive sheet member being electrically coupled at said first pleat of said capacitor to said contact coupling printed circuit board, and said second conductive sheet member being electrically coupled at said second pleat of said capacitor to said metallic shield to thereby ground said first set of contacts through said capacitor.

9. The connector of claim 8, wherein said capacitor has an odd number of pleats in order to maintain the proper polarity to ground.

10. The connector of claim 1, further comprising a capacitor engaging pad mounted on said contact coupling printed circuit board, said first conductive sheet member being electrically coupled to said capacitor engaging pad.

11. A modular connector for mounting on a main printed circuit board and for receiving a plug, comprising

a housing including a receptacle for receiving a plug having eight contacts;

a first set of eight contacts arranged in said housing, each contact of the first set of eight contacts adapted to engage a respective contact of the plug, the first set of eight contacts forming four first contact pairs;

a second set of four contacts at least partially arranged in said housing for engaging the main printed circuit board, each contact of the second set of contacts being electrically coupled to a respective contact of the first set of contacts;

a set of four resistors, each resistor having a first end and a second end, the first end of each resistor coupled to a respective first contact pair;

a capacitor having a first end and a second end, the first end of the capacitor coupled to ground;

a common node, coupled to the second end of the capacitor and to the second end of each of the resistors, for providing balanced signal pairs and impedance to high frequency noise and interference.

12. A modular connector for mounting on a main printed circuit board and for receiving a ping, comprising

a housing,

a first set of contacts arranged in said housing each adapted to engage a respective contact of the plug,

a second set of contacts at least partially arranged in said housing for engaging the main printed circuit board,

a contact coupling printed circuit board arranged in said housing for electrically coupling said first and second sets of contacts, said contact coupling printed circuit board providing a signal path between respective ones of the first and second sets of contacts,

a capacitor coupled to said contact coupling printed circuit board for providing impedance to high frequency noise and interference, said capacitor including first and second conductive members, said first conductive member being electrically coupled to said contact coupling printed circuit board, and

a metallic shield at least partially surrounding said housing, the metallic shield for connection to a grounding region on the main printed circuit board, said second conductive sheet member being electrically coupled to said metallic shield to thereby ground said first set of contacts through said capacitor.

13. A modular connector for mounting on a main printed circuit board and for receiving a plug, comprising

a housing,

a first set of contact pairs arranged in said housing each of said first contact pairs adapted to engage a respective contact pair of the plug,

a second set of contact pairs at least partially arranged in said housing for engaging the main printed circuit board, each of the second contact pairs being electrically coupled to a respective one of the first contact pairs;

a respective resistor for each first contact pair, each resistor having a first end and a second end, the first end of each resistor coupled to its respective first contact pair;

a capacitor having a first end and a second end, the first end of the capacitor coupled to ground;

a common node, coupled to the second end of the capacitor and to the second end of each of the resistors, for providing balanced signal pairs and impedance to high frequency noise and interference.

14. The connector of claim 13, wherein said capacitor comprises a flexible laminate assembly, said first and second ends of said capacitor being first and second conductive sheet members, respectively, said first conductive sheet member being electrically coupled to said common node and said second conductive sheet member being electrically coupled to ground.

15. The connector of claim 14, wherein said capacitor has a plurality of folded pleats including a first pleat arranged at one end of said laminate assembly and a second pleat arranged at an opposite end of said laminate assembly, said first conductive sheet member being electrically coupled at said first pleat to said contact coupling printed circuit board and said second conductive sheet member being electrically coupled at said second pleat to ground.

16. The connector of claim 15, wherein said capacitor has an odd number of pleats in order to maintain the proper polarity to ground.

17. The connector of claim 13, wherein each first contact pair is coupled to its respective second contact pair via a respective first toroidal coil pair and a respective second toroidal coil pair each first toroidal coil pair functioning as a common mode filter and each second toroidal coil pair functioning as a differential mode filter.

18. The connector of claim 17, further comprising

a printed circuit board connected to the first set of contacts, the second set of contacts, and the capacitor, the printing circuit board having the resistors and the toroidal coil pairs mounted thereon, the printed circuit board including a circuit which electrically couples

each of the second set of contacts to the respective one of the first set of contacts through the toroidal coil pairs, and which electrically couples each resistor to a respective first contact pair, and which electrically couples the capacitor and the resistors to the common node.

19. The connector of claim 13, further comprising

a printed circuit board connected to the first set of contacts, the second set of contacts, and the capacitor, the printing circuit board having the resistors mounted thereon, the printed circuit board including a circuit which electrically couples each of the second set of contacts to the respective one of the first set of contacts, and which electrically couples each resistor to a respective first contact pair, and which electrically couples the capacitor and the resistors to the common node.

20. The connector of claim 19, further comprising a capacitor engaging pad mounted on, and electrically coupled to, said contact coupling printed circuit board, said first end of the capacitor being electrically coupled to said capacitor engaging pad.

21. The connector of claim 13, further comprising

a metallic shield at least partially surrounding said housing, the metallic shield for connecting to a grounding region on the main printed circuit board, said first end of the capacitor being electrically coupled via said metallic shield to ground.

22. The connector of claim 13, wherein the capacitor includes first and second conductive members and an intermediate insulative material, said first conductive member forming the first end of the capacitor, the second conductive member forming the second end of the capacitor.

* * * * *

EXHIBIT C

Gary L. Koenigsberg
WOLF, BLOCK, SCHORR AND SOLIS-COHEN LLP
A Pennsylvania Limited Liability Partnership
101 Eisenhower Parkway
Roseland, NJ 07068
(973) 228-5700
Attorneys for Plaintiff,
Bel Fuse, Inc.

Joshua L. Raskin
WOLF, BLOCK, SCHORR AND SOLIS-COHEN LLP
A Pennsylvania Limited Liability Partnership
250 Park Avenue
New York, NY 10017
(212) 986-1116
Attorneys for Plaintiff,
Bel Fuse, Inc.

UNITED STATES DISTRICT COURT
FOR THE DISTRICT OF NEW JERSEY

BEL FUSE, INC. Plaintiff, v. HALO ELECTRONICS, INC. Defendant.	CIVIL ACTION NO. 2:07-cv-02168-HAA-ES **FIRST AMENDED COMPLAINT**

Plaintiff, Bel Fuse, Inc., by and through its undersigned counsel, for its First Amended Complaint against defendant, Halo Electronics Inc., alleges the following upon information and belief, except as to those allegations concerning Bel Fuse, Inc., which are alleged upon knowledge.

THE PARTIES

1. Plaintiff Bel Fuse, Inc. ("plaintiff" or "Bel Fuse") is a corporation organized and existing under the laws of the State of New Jersey with its principal place of business at 206 Van Vorst Street, Jersey City, New Jersey.

2. Defendant Halo Electronics, Inc. ("defendant" or "Halo") is a corporation organized and existing under the laws of the state of Nevada with its principal place of business at 1861 Landings Drive, Mountain View, California.

JURISDICTION AND VENUE

3. This is an action for patent infringement arising under the patent laws of the United States, 35 U.S.C. §§ 100 *et seq.* This Court has jurisdiction over the subject matter of the claim asserted herein pursuant to 28 U.S.C. §§ 1331 and 1338.

4. This Court has personal jurisdiction over Halo because Halo is doing business within this State and judicial district, transacts business within this State and judicial district, has sold and is selling allegedly infringing products into this State and judicial district, derives substantial revenue from intra-state commerce and is otherwise within the jurisdiction of this Court.

5. Venue is proper in this judicial district under 28 U.S.C. §§ 1391(b) and (c) because a substantial part of the events giving rise to the claims occurred in this district, Halo may be found in this judicial district, and Halo is subject to personal jurisdiction in this judicial district. Venue is also proper in this judicial district under 28 U.S.C. § 1400(b).

COUNT I
(Patent Infringement)

6. Bel Fuse restates and realleges the preceding paragraphs of this Complaint.

7. This claim arises under the Patent Laws of the United States, 35 U.S.C. § 1 *et. seq.*, including 35 U.S.C. § 271, and is for willful patent infringement.

8. On April 7, 1998, U.S. Patent No. 5,736,910 ("the '910 patent") entitled, "Modular Jack Connector With A Flexible Laminate Capacitor Mounted On A Circuit Board," was duly and legally issued by the United States Patent and Trademark Office. A true and correct copy of the '910 patent is attached hereto as Exhibit A.

9. Bel Fuse is the assignee of all rights, title, and interest in and to the '910 patent and possesses all rights of recovery under the '910 patent.

10. Halo has been and is infringing, actively inducing others to infringe, and/or contributing to the infringement of the '910 patent by, directly and/or through intermediaries, making, using, selling, offering for sale and/or importing products in the United States and this judicial district that are covered by one or more claims of the '910 patent, including but not limited to, Halo's FastJacks Integrated RJ-45 Connectors.

11. As a direct and proximate result of Halo's acts of infringement, Bel Fuse has suffered damages and is entitled to recover an amount adequate to compensate for the infringement under 35 U.S.C. § 284, which amount is to be determined at trial.

12. Halo has had, at all relevant times, actual and constructive notice that its conduct infringed on the claims of the '910 patent but nevertheless continued its infringing conduct. Halo's infringement has been, and continues to be, willful and, therefore, Bel Fuse is entitled to treble damages under 35 U.S.C. § 284.

13. This is an exceptional case under 35 U.S.C. § 285 which entitles Bel Fuse to an award of reasonable attorneys' fees.

14. Halo will continue infringing the '910 patent unless enjoined from further infringement by this Court.

PRAYER FOR RELIEF

WHEREFORE, Bel Fuse prays for judgment and relief as follows:

A. A judgment that Halo has infringed and continues to infringe claims of the '910 patent;

B. An order, pursuant to 35 U.S.C. § 283, permanently enjoining and restraining Halo and its officers, directors, principals, agents, servants, employees, successors and assigns, and all those in active concert or participation with each of the foregoing, from infringing, and from contributing to and/or inducing the infringement of, any claims of the '910 patent;

C. An order, pursuant to 35 U.S.C. § 284, that Halo account to Bel Fuse for an amount adequate to compensate Bel Fuse for damages sustained from Halo's infringing acts, which amount is to be determined, and that said amount be trebled pursuant to 35 U.S.C. § 284;

D. An order, pursuant to 35 U.S.C. § 285, that Halo pay Bel Fuse its reasonable attorneys' fees in connection with this action;

E. A judgment that costs of this action be awarded to Bel Fuse;

F. An order that Halo pay Bel Fuse prejudgment and post-judgment interest at the highest statutory rate on Bel Fuse's damages, costs and attorneys' fees; and

G. An order awarding Bel Fuse such other and further relief as may be deemed by this Court to be just and proper.

JURY DEMAND

Bel Fuse hereby demands trial by jury on all issues so triable.

WOLF BLOCK SCHORR AND
SOLIS-COHEN, LLP

By: */s/ Gary Koenigsberg, Esq.*

Gary L. Koenigsberg
101 Eisenhower Parkway
Roseland, NJ 07068

Joshua L. Raskin (JR4613)
250 Park Avenue
New York, NY 10017

Attorneys for Plaintiff
Bel Fuse, Inc.

Dated: June 5, 2007

Exhibit A

US005736910A

United States Patent [19]

Townsend et al.

[11] Patent Number: 5,736,910

[45] Date of Patent: Apr. 7, 1998

[54] **MODULAR JACK CONNECTOR WITH A FLEXIBLE LAMINATE CAPACITOR MOUNTED ON A CIRCUIT BOARD**

[75] Inventors: **Peter K. Townsend**, Camp Hill; **Ted R. Meckley**, Seven Valleys; **David Hatch**, Glen Rock; **Don McClune**; **Robert J. Brennan**, both of York, all of Pa.

[73] Assignee: **Stewart Connector Systems, Inc.**, Glen Rock, Pa.

[21] Appl. No.: **561,931**

[22] Filed: **Nov. 22, 1995**

[51] Int. Cl.[6] **H03H 7/09**

[52] U.S. Cl. 333/181; 333/185; 439/620

[58] Field of Search 333/172, 181, 333/182, 183, 184, 185; 361/301.1, 301.2, 301.3, 301.4, 301.5; 439/620

[56] **References Cited**

U.S. PATENT DOCUMENTS

3,353,124	11/1967	Dilgor	333/172
3,996,537	12/1976	Neuman	333/181
4,263,549	4/1981	Toppeto	336/176 X
4,384,263	5/1983	Neuman et al.	333/181
4,622,526	11/1986	Schneider et al.	333/181
4,695,115	9/1987	Taland	333/184 X
4,726,638	2/1988	Farrar et al.	333/185 X
4,761,623	8/1988	Schneider	333/167
4,772,224	9/1988	Taland	439/607
4,863,401	9/1989	Taland	439/610
4,930,200	6/1990	Brush, Jr. et al.	333/185 X
5,244,412	9/1993	Hatch et al.	439/567
5,277,625	1/1994	Ianella et al.	439/620
5,321,372	6/1994	Smith	333/1
5,337,028	8/1994	White	333/185 X
5,420,553	5/1995	Sakamoto et al.	333/181 X
5,495,213	2/1996	Ikeda	333/185 X

FOREIGN PATENT DOCUMENTS

298282	7/1954	Switzerland	361/301.4
483480	4/1938	United Kingdom	361/301.3

Primary Examiner—Robert Pascal
Assistant Examiner—Justin P. Bettendorf
Attorney, Agent, or Firm—Steinberg, Raskin & Davidson, P.C.

[57] **ABSTRACT**

A modular jack connector mounted on a main printed circuit board and having a receptacle into which a modular plug of an electronic component is inserted. The connector includes a housing, a first set of contacts arranged in the housing each adapted to engage one of the contacts of the plug, a second set of contacts at least partially arranged in the housing and adapted to engaging the main printed circuit board, contact coupling circuit means for electrically coupling the first and second sets of contacts, a capacitor for providing impedance to high frequency noise and interference and a metallic shield at least partially surrounding the housing and connected to a grounding region on the main printed circuit board. In one embodiment, the capacitor is a flexible laminate assembly including first and second conductive sheet members and an intermediate insulative material. Further, the capacitor has a plurality of folded pleats including a first pleat arranged at one end of the laminate assembly and a second pleat arranged at an opposite end of the laminate assembly. The first conductive sheet member is electrically coupled at the first pleat to the contact coupling circuit means, and the second conductive sheet member is electrically coupled at the second pleat to the metallic shield to thereby ground the first set of contacts through the capacitor. The contact coupling circuit means may include toroidal coil pairs which function separately as either a differential mode filter or a common mode filter.

22 Claims, 6 Drawing Sheets

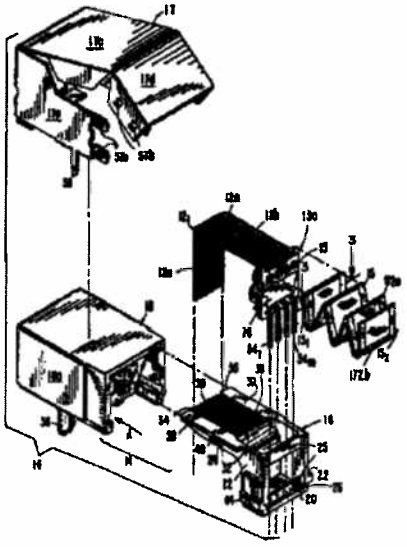

FIG. 1

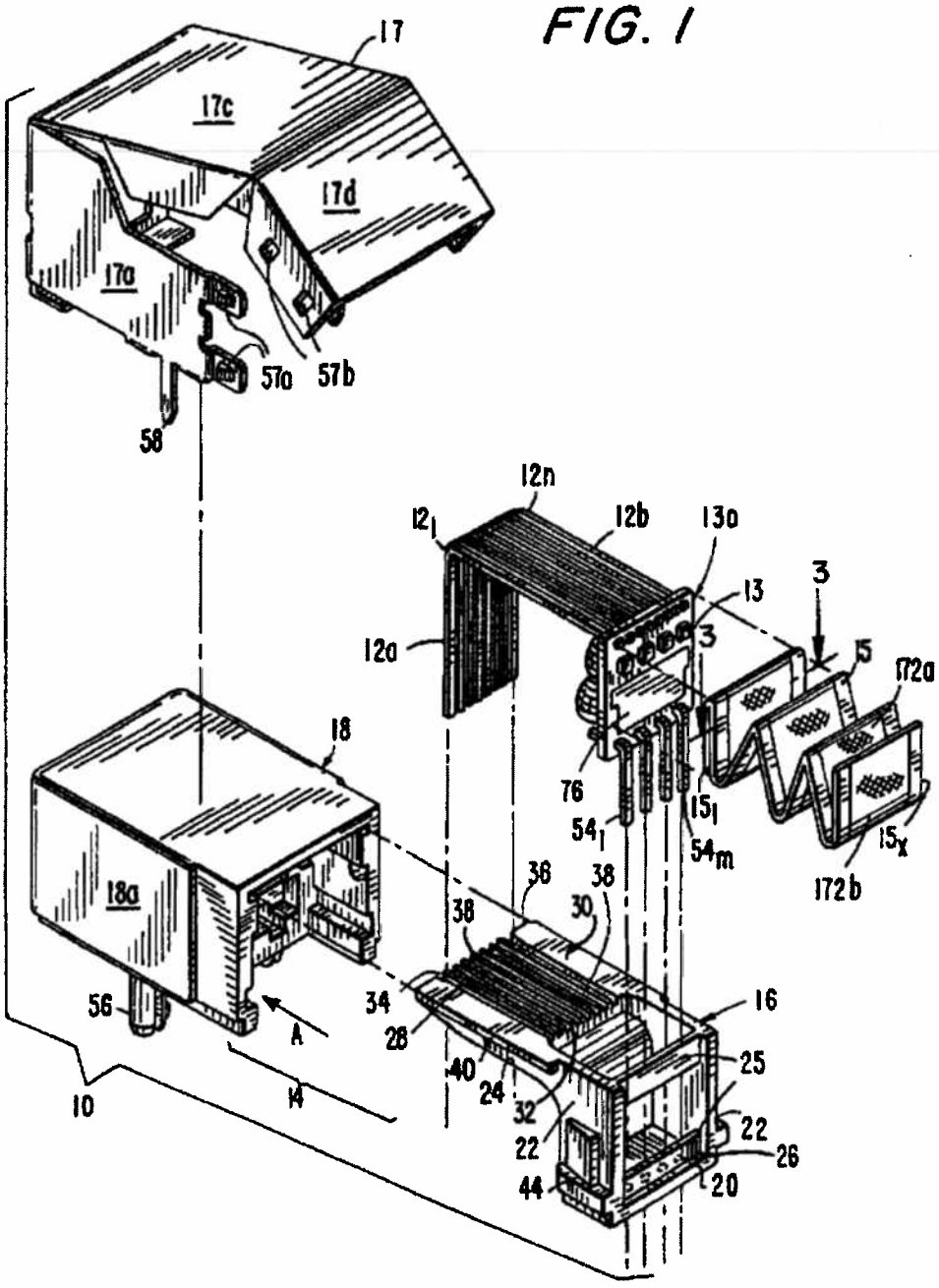
17
17c
17d
17a
57a
57b
58
12n
12₁
12b
13a
13
3
12a
15
172a
18
76
15₁
54₁
54m
15x
172b
18a
36
38
30
38
34
16
56
A
28
25
40
24
32
22
22
26
44
20
10
14

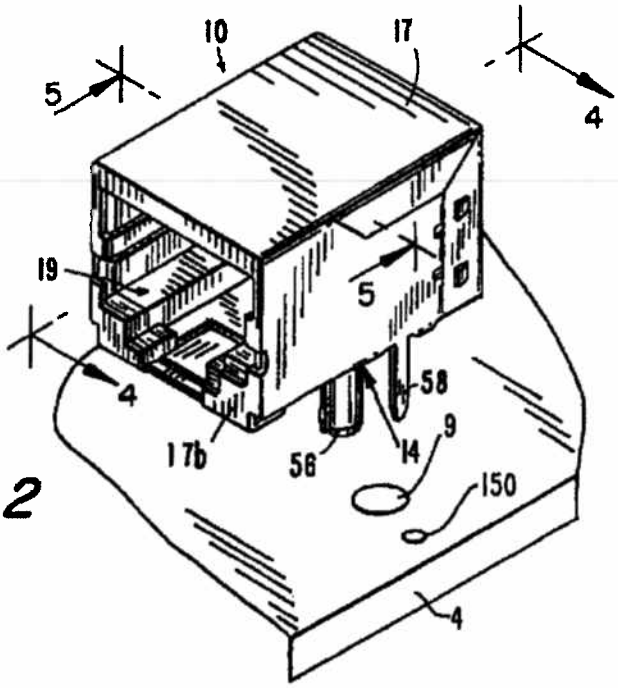

FIG. 2

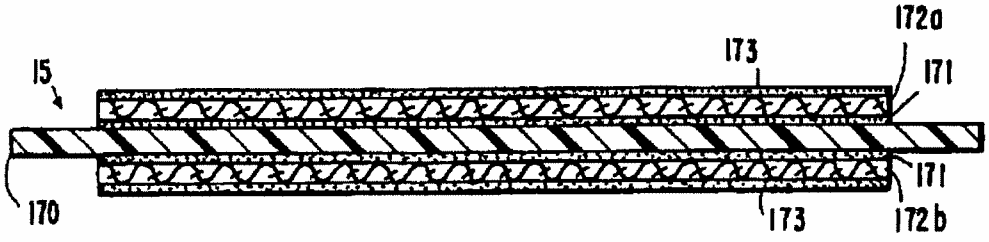

FIG. 3

FIG. 4

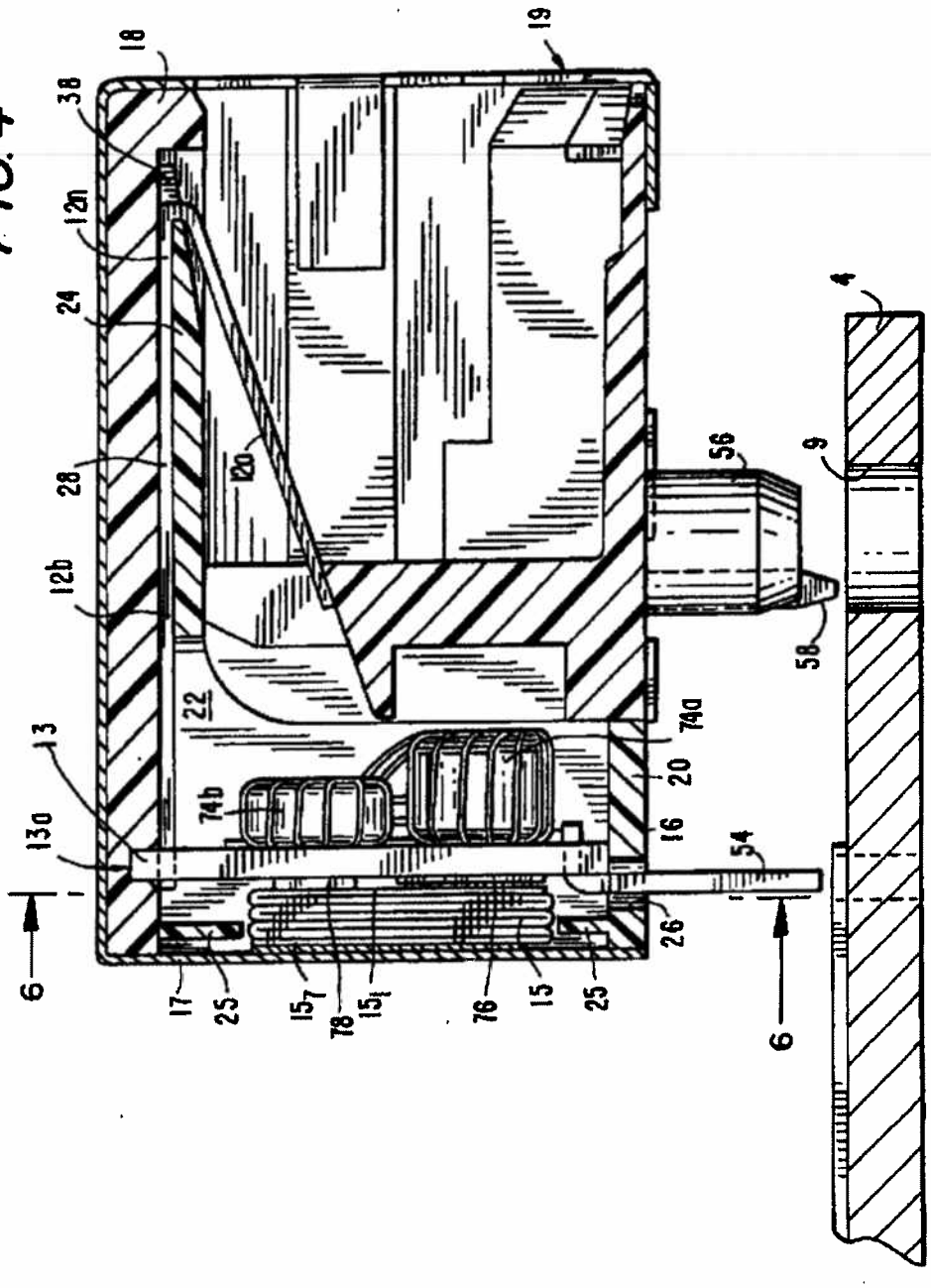
18
19
38
12a
24
28
12b
22
13
13a
74b
74a
20
16
54
56
9
4
58
26
6
6
17
25
15
78
15
76
15
25

FIG. 5

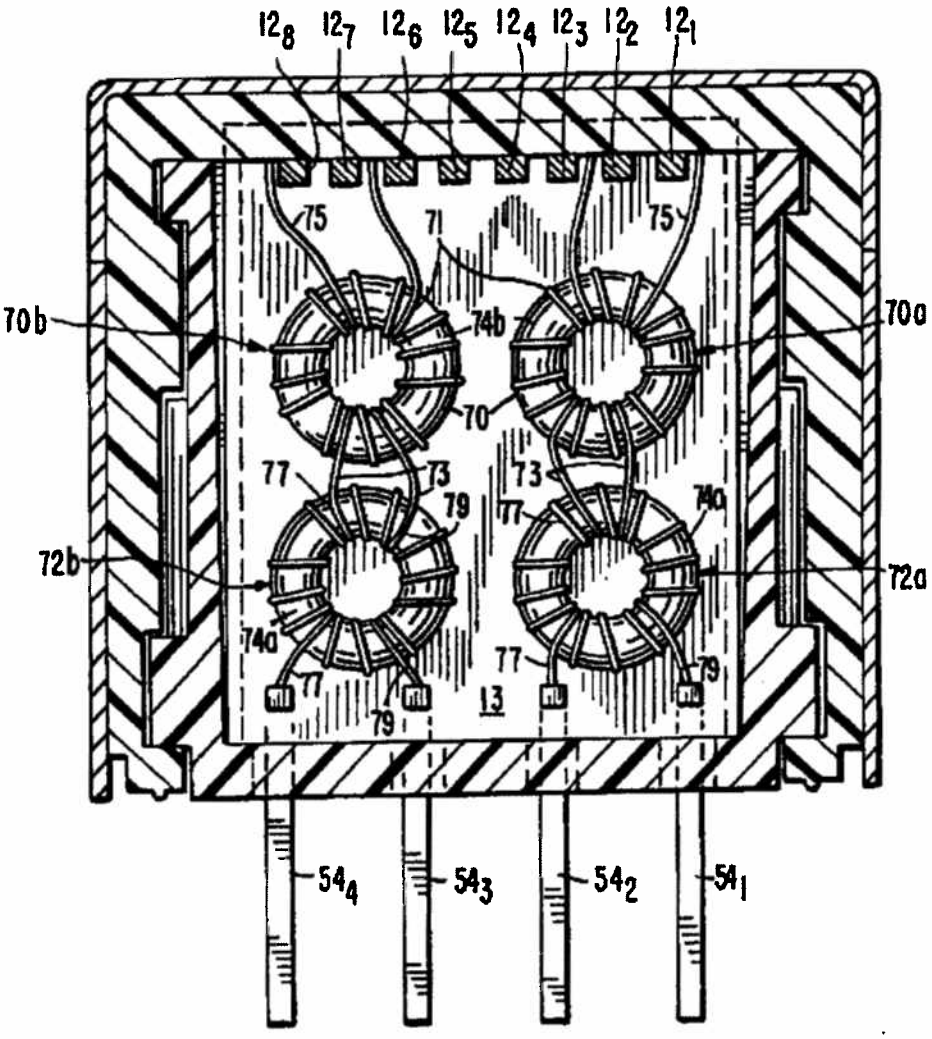
12₈ 12₇ 12₆ 12₅ 12₄ 12₃ 12₂ 12₁
75
71
75
70b
74b
70a
70
77
73
73
79
77
74a
72b
72a
74a
77
77
79
79
13
54₄
54₃
54₂
54₁

FIG. 6

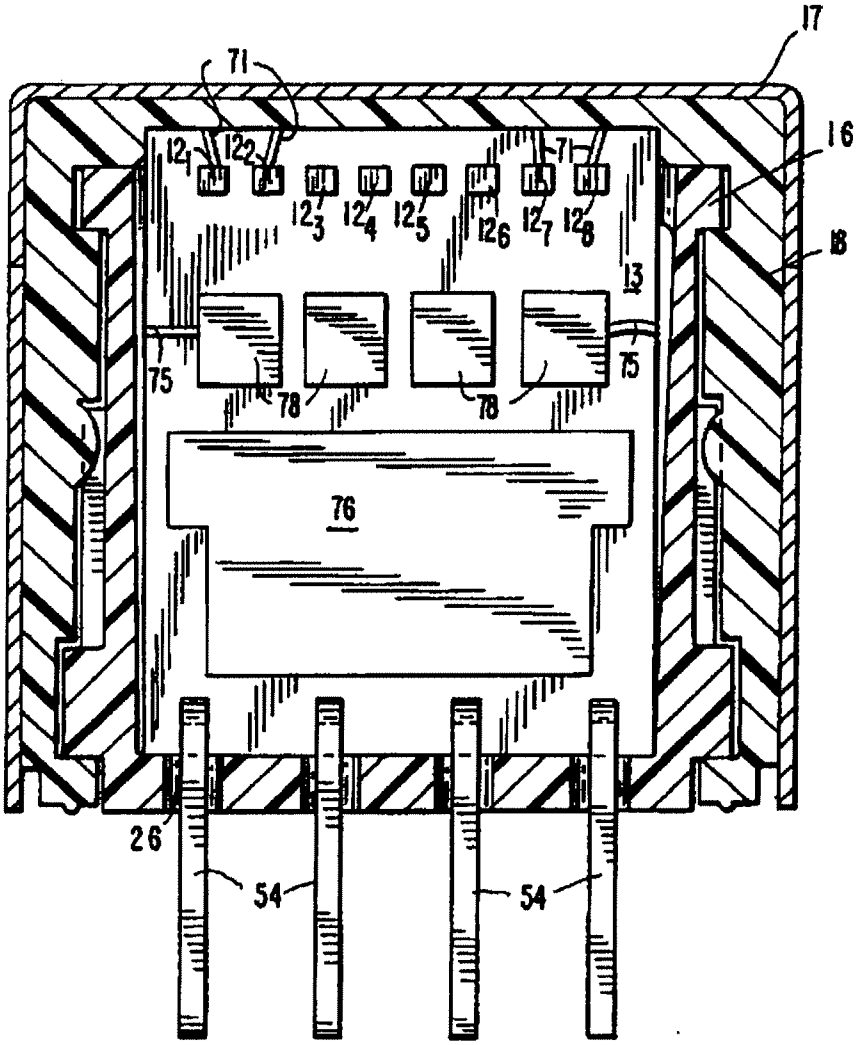

FIG. 7

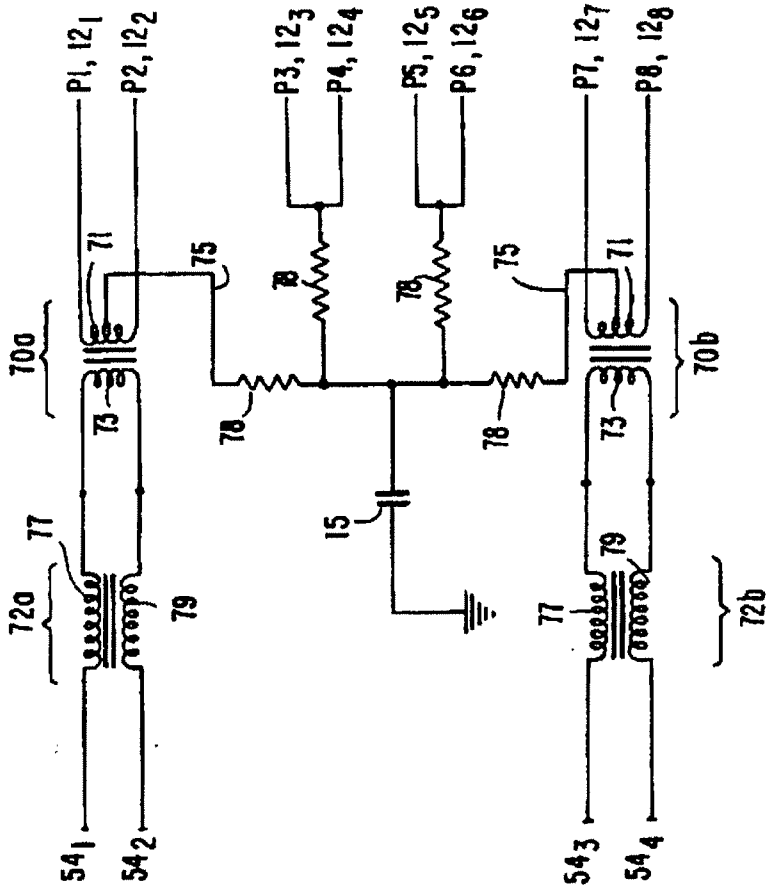
P1, 12 1
P2, 12 2
P3, 12 3
P4, 12 4
P5, 12 5
P6, 12 6
P7, 12 7
P8, 12 8
71
75
78
73
70a
70b
77
79
72a
72b
15
54 1
54 2
54 3
54 4

MODULAR JACK CONNECTOR WITH A FLEXIBLE LAMINATE CAPACITOR MOUNTED ON A CIRCUIT BOARD

FIELD OF THE INVENTION

The present invention relates generally to modular jack connectors designed to be mounted on printed circuit boards and, more particularly, to modular jack connectors including components for filtering common and differential mode interference and for eliminating high frequency noise.

BACKGROUND OF THE INVENTION

Electrical devices are frequently subject to adverse operation in the presence of radio frequency interference in the electrical lines connecting the devices to, e.g., data communication lines. The electrical devices are not only susceptible to such interference, they also function as a source of such interference. Filters must therefore be interposed between connected electrical devices to screen out the interference and minimize its effect on the operation of the electrical devices.

This interference may cause two types of distortion of the power circuit wave form, viz., common mode interference where identical wave forms are impressed on the electrical lines connecting the electrical devices, and differential mode interference which appears as a voltage difference between the connecting electrical lines. Circuitry exists to filter radio frequency interference, but for optimum effectiveness and cost, it has been found to be more efficient to treat the two types of interference independently, i.e., to provide one group of electrical components to serve as a common mode filter and another group of electrical components to serve as a differential mode filter.

Since electrical devices are often coupled by modular jack connectors, it is desirable to construct modular jack connectors with integral filter components to avoid the need for additional, external filter components.

In addition, it is desirable for modular jack connectors mounted on printed circuit boards to eliminate noise and interference present in the electrical connection between the plug received in the jack and the printed circuit on which the jack is mounted. To this end, it has been suggested that line-to-ground capacitors be incorporated in the connector to provide low impedance to high frequencies between the lines and ground.

One such connector is described in U.S. Pat. No. 4,695,115 (Talend). Talend discloses a modular jack in which bypass capacitors engage the contacts in order to pass noise and other high frequency signals to ground. The capacitors are end-mounted ceramic capacitors (tombstone capacitors) and are coupled at one end to contacts in the jack at a location between a terminal mating portion of the contacts and the portion of the contacts that engage a printed circuit board. The capacitors are connected at their other end to a conductive member which in turn is coupled to a grounding region on the printed circuit board so that the capacitors operatively ground the contacts.

It is a disadvantage of the structure of the Talend jack that the capacitance is limited since the size of the ceramic capacitors cannot be increased without correspondingly increasing the size of the jack. Since it is desirable for the jack to have a low profile and to be as small as possible and within industry standards, this prior art jack is not entirely satisfactory. Further, the direct connection between the capacitors and the contacts detrimentally affects the intended signal passing through the contacts.

OBJECTS AND SUMMARY OF THE INVENTION

It is an object of the present invention to provide a new and improved modular jack.

Another object of the present invention is to provide a new and improved modular jack incorporating line filters and bypass capacitors.

Still another object of the present invention is to provide a practical and efficient solution to the connection of a capacitor to electrical current paths through a connector in order to ground the current paths.

It is another object of the present invention to provide a modular jack with capacitance means in which the disadvantages of the prior art modular jacks are substantially eliminated.

It is yet another object of the present invention to provide a modular jack with capacitance means, the capacitance of which is significantly greater than the capacitance of bypass capacitors of prior art jacks, and wherein the size of the modular jack is small and within industry standards.

In accordance with the present invention, these and other objects are attained by providing a modular jack comprising a housing, a first set of contacts for engaging the contacts of a mating plug connector, a second set of contacts for engaging the circuit of the printed circuit board on which the jack is mounted, circuit means for electrically coupling contacts of the first set to contacts of the second set, a capacitor formed of flexible sheet-like materials, preferably formed into a plurality of folded pleats, and a metallic shield at least partially surrounding the housing and electrically coupled to a ground region of the printed circuit board on which the jack is mounted. The capacitor includes two conductive sheet members and an intermediate insulative material. A first one of the conductive sheet members in the capacitor is coupled at one of the extreme capacitor pleats to contacts of the first set and a second one of the conductive sheet members in the capacitor engages the metallic shield at the other extreme capacitor pleat to thereby ground the first set of contacts through the pleated capacitor to eliminate high frequency noise and interference. In a preferred embodiment, the contact coupling circuit means includes a circuit board component arranged within the jack housing. To provide common and differential mode interference filtering, a plurality of toroidal coil pairs are mounted on the circuit board component in the contact coupling circuit means. A first group of the toroidal coil pairs functions as a common mode filter and a second group of the toroidal coil pairs functions as a differential mode filter.

In accordance with another embodiment of the invention, the contacts of the first set of contacts are coupled in pairs to each other and each contact pair is coupled to a capacitor, such as the pleated capacitor described above, through a respective resistor. Only after passing through one of the resistors does the electrical signal from the first set of contacts reach the capacitor. By means of this construction, the capacitor constitutes a center point or center mode or center tap for each pair of contacts of the first set of contacts and establishes a 0-value common mode voltage at the output terminals of the connector. The interposition of a resistor between the capacitor and each pair of contacts of the first set of contacts which engage the contacts of the modular plug provides balanced signal pairs and a balanced circuit without adversely affecting the signal.

It is also significant that only a single capacitor is required in a jack connector according to the invention since each of

the contact pairs is connected to the capacitor via a respective resistor and the contact coupling circuit means. Thus, the need for multiple capacitors is avoided.

The jack housing may be provided with any conventional mounting arrangement for mounting the jack on a printed circuit board, such as the arrangement described in U.S. Pat. No. 5,244,412, the specification of which is hereby incorporated by reference.

In an eight position jack according to the invention, i.e., having eight contacts in the first set, adapted to be coupled to a modular plug having only four signal-carrying contacts, only four contacts of the first set are coupled by the contact coupling circuit means to four contacts of the second set. The four remaining unused contacts of the first set are connected in pairs to each other, and each pair of unused contacts is coupled to the capacitor which functions to ground the unused contacts thereby filtering noise and interference. In this embodiment, a resistor may be used to couple each connected pair of unused contacts to the capacitor, in addition to the use of a resistor between coupled pairs of the used contacts of the first set and the capacitor, to provide a balanced circuit.

BRIEF DESCRIPTION OF THE DRAWINGS

Additional objects of the invention will be apparent from the following description of the preferred embodiment thereof taken in conjunction with the accompanying non-limiting drawings, in which:

FIG. 1 is an exploded perspective view of a connector in accordance with the invention;

FIG. 2 is a perspective view of the connector of FIG. 1;

FIG. 3 is a sectional view of the capacitor component of the connector taken along line 3—3 of FIG. 1;

FIG. 4 is a sectional view of the connector taken along line 4—4 of FIG. 2;

FIG. 5 is a sectional view of the connector taken along line 5—5 of FIG. 2;

FIG. 6 is a sectional view of the connector taken along line 6—6 of FIG. 4; and

FIG. 7 is a circuit diagram of a jack connector in accordance with the invention.

DETAILED DESCRIPTION OF THE PREFERRED EMBODIMENT

Referring now to FIGS. 1–7 of the drawings wherein like reference characters designate identical or corresponding parts throughout the several views, an embodiment of a device in accordance with the present invention in the form of a modular jack connector **10**, adapted to couple an electronic device to the circuit of a printed circuit board through a modular plug connector, comprises a two-part housing **14** formed of an insulative material, such as plastic, a first set of conductive contacts comprising a plurality of contacts $12_1, \ldots, 12_n$, a second set of contacts $54_1, \ldots, 54_m$, a circuit board assembly **13***a* comprising circuit means for electrically coupling the contacts **12** of the first set to the contacts **54** of the second set, a capacitor **15** formed of flexible sheet-like materials formed into a plurality of folded pleats $15_1, \ldots, 15_n$ and a metallic shield **17** which at least partially surrounds the housing **14**. The housing **14** includes a first inner housing part **16** and a second outer housing part **18** which together define a receptacle **19** adapted to receive a modular plug. A leg portion **12***a* of each of the first contacts $12_1, \ldots, 12_n$ engages a respective contact of the modular plug received within the receptacle **19**.

Referring to FIGS. **1, 4, 5** and **6**, the inner housing part **16** is formed of an insulative plastic material and has a substantially L-shaped configuration including a framework section comprising a transverse base portion **20** and a pair of side portions **22** projecting upward from both sides of the base portion **20** (FIG. 1), and a guide section **24** extending forwardly from the top of the framework section in a cantilever fashion. The rear side of the framework section of the inner housing part **16** is partially closed by a pair of transverse upper and lower walls **25** extending between the side portions **22**. A significant open space is defined at the rear side of the framework section of the inner housing part **16** between upper and lower walls **25**.

A plurality of substantially parallel guide slots or channels **28** are formed in the top surface **30** of the guide section **24** of the inner housing part **16** and each channel **28** is receivable of a leg portion **12***b* of one of the contacts $12_1, \ldots, 12_n$ (FIG. 1). Each channel **28** opens at its rearward end **32** at the open top of the framework section of inner housing part **16** and terminates at its forward end **34** which is recessed rearwardly of the forward edge **36** of the guide section **24** to form fingers **38**.

As best seen in FIGS. **1** and **4**, each of the first set of contacts $12_1, \ldots, 12_n$ has a first leg portion **12***a* extending through the receptacle **19** (FIG. 4) formed in the interior of the housing **14** for engaging a respective one of the plug contacts. The second leg portion **12***b* of each of the contacts $12_1, \ldots, 12_n$ is positioned in a respective one of the channels **28**. The rear end of the second leg **12***b* of each contact **12** is attached, e.g., by soldering, to a circuit board component **13** of the circuit board assembly **13***a*. The upper end of each contact $54_1, \ldots, 54_m$ of the second set of contacts is connected to the circuit board component **13** and each second contact **54** extends through a respective bore **26** formed in the base portion **20** for connection at its lower end to the printed circuit board **4** (FIG. 4).

The contact coupling circuit means that couple the contacts **12** of the first set to the contacts **54** of the second set are situated within the framework section of the inner housing part **16**. The contact coupling means includes the circuit board component **13** having a printed circuit including a contact element **76** (FIG. 1) and four toroidal coil pairs **70***a*,**70***b*,**72***a*,**72***b* (FIG. 5) mounted on one side of the circuit board component **13**. Each of the toroidal coil pairs **70***a*,**70***b* comprises a toroidal core **74***b* and two coils **71**,**73** wound around the core **74***b*. Each of the toroidal coil pairs **72***a*,**72***b* comprises a toroidal core **74***a* and two coils **77**,**79** wound around the core **74***a*.

Referring to FIGS. **5** and **7**, one end of coil **71** of toroidal coil pair **70***a* is connected to the contact 12_1 and the other end of coil **71** is connected to the contact 12_2. Thus, contacts 12_1,12_2 are coupled to each other via coil **71**. Similarly, contacts 12_7,12_8 are coupled to each other via coil **71** of the toroidal coil pair **70***b*. The other coil **73** of each of the toroidal coil pairs **70***a*,**70***b* is connected at one end to a coil **79** of a respective one of the toroidal coil pairs **72***a*,**72***b* and at its other end to the coil **77** of the respective one of the toroidal coil pairs **72***a*,**72***b*. Coils **77**,**79** are connected at their other ends to respective ones of the contacts **54** of the second set of contacts, i.e., coil **79** of toroidal coil pair **72***a* is connected to contact 54_1, coil **77** of toroidal coil pair **72***a* is connected to contact 54_2, coil **79** of toroidal coil pair **72***b* is connected to contact 54_3, coil **77** of toroidal coil pair **72***b* is connected to contact 54_4. Thus, as best seen in the circuit diagram shown in FIG. 7, contacts **54** are coupled in pairs to each other via coils **77** of the toroidal coil pairs **72***a*,**72***b* which are connected to coils **73** of the toroidal coil pairs

70a,70b which in turn are connected to coils 79 of the toroidal coil pairs 72a,72b.

Coils 71,73 are wound around respective toroidal cores 74b in a specific manner and incorporated into the contact coupling circuit means so that their current-induced inductive fluxes are additive. As such, toroidal coil pairs 70a,70b function as differential mode filters. Coils 77,79 of the toroidal coil pairs 72a,72b are wound around toroidal core 74a inductively opposite to each other and are equal in number of turns so that their current-induced fluxes substantially cancel each other. In this case, toroidal coil pairs 72a,72b thus function as common mode filters. Toroidal coil pairs 72a,72b are smaller in size than toroidal coil pairs 70a,70b since while the toroidal coil pairs 70a,70b must comply with ETHERNET specifications and have a minimum inductance value, there is no standard industry specification for toroidal coil pairs 72a,72b which function as common mode filters.

With respect to the arrangement of coils on toroidal cores to form toroidal coil pairs which function as either common mode filters or differential mode filters, reference is made to U.S. Pat. Nos. 3,996,537 and 4,263,549. The specifications of these references are incorporated by reference.

As seen most clearly in FIGS. 1 and 3, the capacitor 15 is a continuous, flexible, elongate laminate assembly formed of a laminate of a sheet 170 of insulative material such as CAPTON™ and a pair of flexible conductive sheet members 172a,172b formed of wire mesh attached to respective sides of the sheet 170 by conductive adhesive means, such as conductive paste 171 (FIG.3). An insulative coating 173, such as non-conductive paste, is applied to the outer surface of both the sheet members 172a,172b with regions of the first and last pleats left exposed. In the illustrated embodiment, the capacitor laminate assembly was folded to form seven substantially equal sections or folded pleats 15_1, . . . , 15_x, where x=7. An exposed region of the conductive sheet member 172a of the first pleat 15_1 is adjacent to and attached to the contact element 76 arranged on the circuit board component 13 and an exposed region of the conductive sheet member 172b of the last pleat 15_7 is attached to an inner surface of the metallic shield 17 (FIG. 4).

Although the capacitor laminate assembly in the illustrated embodiment has six folds defining seven pleats, the number of pleats in the capacitor 15 depends on the capacitance to be obtained and the dimensions of the conductive sheet members 172a,172b and the sheet 170 of insulative material. Thus, the capacitor 15 may even be an unfolded flexible laminate assembly provided the capacitance provided thereby is sufficient to enable effective operation of the connector.

The capacitor 15 must have an odd number of pleats, e.g., seven as shown, in order to maintain the proper polarity to ground, i.e., the sheet member 172a must be electrically coupled to the circuit means coupled to contacts 12 and the sheet member 172b must be electrically coupled to the metallic shield 17.

The construction of the capacitor 15 in this manner, that is as a flexible laminate assembly formed in a plurality of folded pleats, provides significant advantages in the construction and operation of the connector 10. In particular, it enables a significant increase in the capacitance which can be provided in the small space occupied by the capacitor and existing in the interior of the connector. In an experimental embodiment, over 100 Pf of capacitance was obtained by making a five-pleated capacitor from 0.340×2.0 inches of copper sheet mesh with 0.4×2.0 inches of CAPTON™ film. The thickness of the capacitor was about 0.124 inches, the sheet members 172a,172b having a thickness of about 0.0016 inches, the CAPTON™ sheet 170 having a thickness of about 0.005 inches, the layer of conductive paste 171 between the sheet members 172a,172b and the CAPTON™ sheet 170 having a thickness of about 0.0014 inches and the layer of non-conductive paste 173 on the outer surface of at least one of the sheet members 172a,172b having a thickness of about 0.0014 inches.

Referring now to FIG. 6, the circuit board component assembly 13a also includes four resistors 78 mounted on an opposite side of the circuit board component 13 from the side on which the toroidal coil pairs 70a,70b,72a,72b are mounted. The contact element 76, to which the capacitor 15 is connected via conductive adhesion means, is also arranged on the same side of the circuit board component 13 as the resistors 78 and is coupled to resistors 78 by the circuitry of circuit board 13. The circuit of the circuit board component 13 provides an electrical connection from each of the resistors 78 to the capacitor contact element 76 to which the capacitor 15 is mounted.

In one embodiment of the invention, a resistor 78 is provided for each pair of contacts 12 of the first set. Each resistor is coupled between each pair of contacts 12 and the capacitor 15 to provide balanced signal pairs and a balanced circuit without adversely affecting the signal.

FIG. 7 illustrates a circuit diagram of the components of an eight position jack, i.e., a jack having eight contacts 12_1, . . . , 12_8, in accordance with the invention which is adapted to be coupled to a printed circuit board 4 having only four signal-carrying contacts. Therefore, only four contacts 12_1, 12_2,12_7,12_8 of the first set are coupled by the contact coupling circuit means to four contacts of the second set 54_1, . . . , 54_4. The four unused contacts 12_3, . . . , 12_6 of the first set are connected in pairs, 12_3 and 12_4, 12_5 and 12_6, via the appropriate electrical connections on the circuit board component 13 and then each pair is connected to a resistor 78. On the other hand, electrical connections, which may be wires 75, are provided (shown in dotted lines in FIGS. 5 and 6) to couple the resistors 78 which are coupled to the contacts 12_1,12_2,12_7,12_8 to a respective one of the coils 71.

The contacts 12_3,12_4 are thus connected to each other and to a single resistor 78 and similarly, the contacts 12_5,12_6 are connected to each other and to another resistor 78. Contacts 12_3,12_4,12_5,12_6 are unused and filtered. Coil 71 of the first toroidal coil pair 70a connects contacts 12_1 and 12_2 and another coil 71 of the second toroidal coil pair 70b connects contacts 12_7,12_8. Wires 75 connect each of the coils 71 to one of the resistors 78. The circuitry on circuit board component 13 includes connections between each of the resistors 78 and capacitor 15. All of the contacts 12_1, . . . , 12_8 are thus electrically coupled to the capacitor 15 via the resistors 78. In view of this arrangement, the current path from each pair of the contacts 12 is directed to the capacitor 15 only through one of the resistors 78 providing for balanced signal pairs.

Referring again to FIG. 1, the assembly of the jack 10 will now be described. The contacts 12_1, . . . , 12_n are initially pre-formed with the first and second leg portions 12a,12b as shown in FIG. 1. The circuit board component assembly 13a is also pre-assembled with its electrical-circuit-containing circuit board component 13, and the toroidal coil pairs 70a,70b,72a,72b, wires 75, capacitor contact element 76 and resistors 78 mounted on the circuit board component 13 and the pad-engaging contacts 54_1, . . . , 54_m and contacts 12_1, . . . , 12_n connected thereto. Upon insertion of the circuit

board assembly 13*a* into the framework of the inner housing part 16, the pad-engaging contacts 54 are inserted through aligned bores 26 in the base portion 20 of the inner housing part 16 and the legs 12*b* of contacts $12_1, \ldots, 12_n$ are inserted into respective ones of the channels 28 in the guide portion 24 of the inner housing part 16 such that the first leg portions 12*a* thereof extend beyond the forward edge of the channels 28.

The sub-assembly of the inner housing part 16, circuit board assembly 13*a* and contacts $12_1, \ldots, 12_n$ is then inserted into the rearward space within outer housing part 18 in the direction of arrow A as shown in FIG. 1. During insertion, the mating contact portions, i.e., the first leg portions 12*a* of contacts $12_1, \ldots, 12_n$, are aligned with respective guide slots formed in the outer housing part 18 between partitions and engage a surface whereby the first leg portions 12*a* are bent into the shape shown in FIG. 4 as insertion of the inner housing part 16 into the outer housing part 18 continues. Other details of the assembly of the inner housing part 16 into the outer housing part 18 can be found in U.S. Pat. No. 5,244,412 referenced above.

Mesh sheet 172*a* at the first pleat 15_1 of the pleated capacitor 15 is electrically connected to the contact element 76 of the circuit board component 13 by means of a conductive adhesive.

The metallic shield 17 is then applied over the outer housing part 18 of the housing 14 to surround at least a portion of the housing 14 once the capacitor 15, circuit board assembly 13*a* and contacts $12_1, \ldots, 12_n$ are secured in the housing 14. To this end, the metallic shield 17 is constructed with folds corresponding to the edges of the outer housing part 18. To apply the metallic shield 17 about housing 14, first side portions 17*a* (only one of which is shown in FIG. 1) and a front portion 17*b* (FIG. 2) of the metallic shield 17 are positioned abutting corresponding surfaces of the outer housing part 18, i.e., the metallic shield 17 is placed over the outer housing part 18 so that side portions 17*a* engage side portions 18*a* of the housing and the front portion 17*b* of the metallic shield 17 engages with the front, substantially open side of the outer housing part 18 (See FIG. 2). Then, the top surface 17*c* of the metallic shield 17 is brought into engagement with the top surface of the outer housing part 18. Conductive adhesive is applied to connect the parts of the metallic shield 17 to the outer surfaces of the housing 14.

Mesh sheet 172*b* at the last pleat 15_7 of the pleated capacitor 15 is electrically connected to the rear surface 17*d* of the metallic shield by means of a conductive adhesive.

The rear surface 17*d* of the metallic shield 17 is bent about the fold between the rear surface 17*d* and the top surface 17*c* to close a rear side of the outer housing part 18, i.e., that side of the outer housing part 18 which is open, through which the inner housing part 16 is inserted into the outer housing part 18 and at which the capacitor 15 is positioned. The rear surface 17*d* of the metallic shield 17 is attached to the side portions 17*a* of the shield 17 by cooperating fastening members 57*a*,57*b* to securely close the shield 17 about the housing 14. In this manner, only a lower portion of the housing 14 and the receptacle 19 for entry of the modular plug are exposed (as shown in FIG. 2) and are not covered by the metallic shield 17. The jack connector 10 is then attached to the printed circuit board 4 by inserting the mounting posts 56 into holes 9 in the printed circuit board 4.

Electrical connection of the metallic shield 17 to the printed circuit board 4 is facilitated by metallic tabs 58 extending from the lower surface of the side portions 17*a* of the metallic shield 17. Tabs 58 are soldered to a grounding region 150 (FIG. 2) on the printed circuit board 4 to operatively ground the metallic shield 17 and thus ground the first set of contacts $12_1, \ldots, 12_n$ coupled thereto through the capacitor 15 and the circuit board component 13.

The examples provided above are not meant to be exclusive. Many other variations of the present invention would be obvious to those skilled in the art, and are contemplated to be within the scope of the appended claims. For example, although in the illustrated embodiment a printed circuit board component is contained within the connector, in a more basic embodiment, it is possible to dispense with the printed circuit board component and toroidal coil pairs attached thereto, and to connect the pleated capacitor via resistors to the contacts themselves or to some electrical coupling means which couple the contacts which engage the contacts of the mating plug and the contacts which engage the printed circuit board. Also, it is possible to dispense with the circuit board component altogether and to mount the toroidal coil pairs, resistors, capacitor and contact coupling circuit means on the housing, e.g., interior walls of the housing.

We claim:

1. A modular connector for mounting on a main printed circuit board and for receiving a plug, comprising

a housing,

a first set of contacts arranged in said housing each adapted to engage one of the contacts of the plug,

a second set of contacts at least partially arranged in said housing and adapted to engage the main printed circuit board,

a contact coupling printed circuit board for electrically coupling said first and second sets of contacts, said contact coupling printed circuit board providing a signal path between respective ones of the first and second sets of contacts,

a capacitor comprising a flexible laminate assembly including first and second flexible conductive sheet members and an intermediate insulative material, said first conductive sheet member being electrically coupled to said contact coupling printed circuit board, and

a metallic shield at least partially surrounding said housing for connecting to a grounding region on the main printed circuit board, said second conductive sheet member being electrically coupled to said metallic shield to thereby ground said first set of contacts through said capacitor.

2. The connector of claim 1, wherein said contact coupling printed circuit board is arranged in said housing, said first and second sets of contacts being connected to said contact coupling printed circuit board, and further including

a plurality of toroidal coil pairs mounted on said contact coupling printed circuit board and coupled to said first and second sets of contacts, a first group of said toroidal coil pairs functioning as a common mode filter and a second group of said toroidal coil pairs functioning as a differential mode filter.

3. The connector of claim 1, wherein said contact coupling printed circuit board includes a plurality of toroidal coil pairs coupled to said first and second sets of contacts, a first group of said toroidal coil pairs functioning as a common mode filter and a second group of said toroidal coil pairs functioning as a differential mode filter.

4. The connector of claim 1, further comprising a plurality of resistors, at least a portion of said resistors being coupled to said contact coupling printed circuit board.

5. The connector of claim 4, wherein said contact coupling circuit printed circuit board couples pairs of said first set of contacts, each pair of contacts of said first set of contacts being coupled to said capacitor through one of said resistors.

6. The connector of claim 4, wherein said housing comprises a receptacle having eight contacts, said first set of contacts comprising four of said eight contacts, said resistors comprising four resistors, said contacts of said first set of contacts being coupled in pairs through one of said resistors to said capacitor and said four contacts not constituting said first set of contacts being coupled in pairs through one of said resistors to said capacitor such that balanced signal pairs are provided.

7. The connector of claim 4, wherein the plurality of resistors are mounted on said contact coupling printed circuit board.

8. The connector of claim 1, wherein said capacitor has a plurality of folded pleats including a first pleat arranged at one end of said laminate assembly and a second pleat arranged at an opposite end of said laminate assembly, said first conductive sheet member being electrically coupled at said first pleat of said capacitor to said contact coupling printed circuit board, and said second conductive sheet member being electrically coupled at said second pleat of said capacitor to said metallic shield to thereby ground said first set of contacts through said capacitor.

9. The connector of claim 8, wherein said capacitor has an odd number of pleats in order to maintain the proper polarity to ground.

10. The connector of claim 1, further comprising a capacitor engaging pad mounted on said contact coupling printed circuit board, said first conductive sheet member being electrically coupled to said capacitor engaging pad.

11. A modular connector for mounting on a main printed circuit board and for receiving a plug, comprising

a housing including a receptacle for receiving a plug having eight contacts;

a first set of eight contacts arranged in said housing, each contact of the first set of eight contacts adapted to engage a respective contact of the plug, the first set of eight contacts forming four first contact pairs;

a second set of four contacts at least partially arranged in said housing for engaging the main printed circuit board, each contact of the second set of contacts being electrically coupled to a respective contact of the first set of contacts;

a set of four resistors, each resistor having a first end and a second end, the first end of each resistor coupled to a respective first contact pair;

a capacitor having a first end and a second end, the first end of the capacitor coupled to ground;

a common node, coupled to the second end of the capacitor and to the second end of each of the resistors, for providing balanced signal pairs and impedance to high frequency noise and interference.

12. A modular connector for mounting on a main printed circuit board and for receiving a plug, comprising

a housing,

a first set of contacts arranged in said housing each adapted to engage a respective contact of the plug,

a second set of contacts at least partially arranged in said housing for engaging the main printed circuit board,

a contact coupling printed circuit board arranged in said housing for electrically coupling said first and second sets of contacts, said contact coupling printed circuit board providing a signal path between respective ones of the first and second sets of contacts,

a capacitor coupled to said contact coupling printed circuit board for providing impedance to high frequency noise and interference, said capacitor including first and second conductive members, said first conductive member being electrically coupled to said contact coupling printed circuit board, and

a metallic shield at least partially surrounding said housing, the metallic shield for connection to a grounding region on the main printed circuit board, said second conductive sheet member being electrically coupled to said metallic shield to thereby ground said first set of contacts through said capacitor.

13. A modular connector for mounting on a main printed circuit board and for receiving a plug, comprising

a housing,

a first set of contact pairs arranged in said housing each of said first contact pairs adapted to engage a respective contact pair of the plug,

a second set of contact pairs at least partially arranged in said housing for engaging the main printed circuit board, each of the second contact pairs being electrically coupled to a respective one of the first contact pairs;

a respective resistor for each first contact pair, each resistor having a first end and a second end, the first end of each resistor coupled to its respective first contact pair;

a capacitor having a first end and a second end, the first end of the capacitor coupled to ground;

a common node, coupled to the second end of the capacitor and to the second end of each of the resistors, for providing balanced signal pairs and impedance to high frequency noise and interference.

14. The connector of claim 13, wherein said capacitor comprises a flexible laminate assembly, said first and second ends of said capacitor being first and second conductive sheet members, respectively, said first conductive sheet member being electrically coupled to said common node and said second conductive sheet member being electrically coupled to ground.

15. The connector of claim 14, wherein said capacitor has a plurality of folded pleats including a first pleat arranged at one end of said laminate assembly and a second pleat arranged at an opposite end of said laminate assembly, said first conductive sheet member being electrically coupled at said first pleat to said contact coupling printed circuit board and said second conductive sheet member being electrically coupled at said second pleat to ground.

16. The connector of claim 15, wherein said capacitor has an odd number of pleats in order to maintain the proper polarity to ground.

17. The connector of claim 13, wherein each first contact pair is coupled to its respective second contact pair via a respective first toroidal coil pair and a respective second toroidal coil pair each first toroidal coil pair functioning as a common mode filter and each second toroidal coil pair functioning as a differential mode filter.

18. The connector of claim 17, further comprising

a printed circuit board connected to the first set of contacts, the second set of contacts, and the capacitor, the printing circuit board having the resistors and the toroidal coil pairs mounted thereon, the printed circuit board including a circuit which electrically couples

each of the second set of contacts to the respective one of the first set of contacts through the toroidal coil pairs, and which electrically couples each resistor to a respective first contact pair, and which electrically couples the capacitor and the resistors to the common node.

19. The connector of claim 13, further comprising

a printed circuit board connected to the first set of contacts, the second set of contacts, and the capacitor, the printing circuit board having the resistors mounted thereon, the printed circuit board including a circuit which electrically couples each of the second set of contacts to the respective one of the first set of contacts, and which electrically couples each resistor to a respective first contact pair, and which electrically couples the capacitor and the resistors to the common node.

20. The connector of claim 19, further comprising a capacitor engaging pad mounted on, and electrically coupled to, said contact coupling printed circuit board, said first end of the capacitor being electrically coupled to said capacitor engaging pad.

21. The connector of claim 13, further comprising

a metallic shield at least partially surrounding said housing, the metallic shield for connecting to a grounding region on the main printed circuit board, said first end of the capacitor being electrically coupled via said metallic shield to ground.

22. The connector of claim 13, wherein the capacitor includes first and second conductive members and an intermediate insulative material, said first conductive member forming the first end of the capacitor, the second conductive member forming the second end of the capacitor.

* * * * *

EXHIBIT D

UNITED STATES DISTRICT COURT

DISTRICT OF NEVADA

* * *

HALO ELECTRONICS, INC., Plaintiff, vs. BEL FUSE, INC., PULSE ENGINEERING, INC., and TECHNITROL, INC., Defendants.	2:07–CV-00331-PMP-PAL **ORDER**

Before the Court for consideration is Defendant Bel Fuse, Inc.'s Motion to Dismiss Halo Electronics' First Amended Complaint for Lack of Personal Jurisdiction (Doc. #54), filed August 13, 2007. On November 30, 2007, the Court conducted a hearing regarding Bel Fuse's fully briefed motion.

Plaintiff Halo's first amended complaint asserts a claim for patent infringement against Defendant Bel Fuse and Co-defendants' Pulse Engineering and Technitrol. Bel Fuse contends that notwithstanding the opportunity to conduct jurisdictional discovery, Halo's amended complaint fails to allege facts sufficient to support personal jurisdiction over Bel Fuse in the State of Nevada. Halo responds that Bel Fuse maintains continuous and systematic contacts with Nevada which make it subject to general personal jurisdiction in this Court. Halo further argues that this Court has specific jurisdiction over Bel Fuse because Bel Fuse has purposefully directed its

activities at Nevada customers, Halo's infringement claim relates to Bel Fuse's Nevada activities, and the exercise of jurisdiction over Bel Fuse is reasonable and fair considering all of Bel Fuse contacts with Nevada.

In assessing Bel Fuse's motion to dismiss for lack of personal jurisdiction, this Court applies the legal standard articulated in Huffy Corp. v. Overlord Indus., 246 F. Supp. 2d 1093, 1095-1096 (D. Nev. 2003). Under the foregoing standard, the Court finds that Halo has failed to meet its burden of demonstrating that general personal jurisdiction exist over Bel Fuse in Nevada or that Halo's infringement claim arises out of or relates to Bel Fuse's activities in Nevada so as to confer specific personal jurisdiction.

IT IS THEREFORE ORDERED that Defendant Bel Fuse, Inc.'s Motion to Dismiss Halo Electronics' First Amended Complaint for Lack of Personal Jurisdiction (Doc. #54) is GRANTED, and that Plaintiff's first amended complaint against Defendant Bel Fuse, Inc., is hereby DISMISSED.

DATED: December 5, 2007.

PHILIP M. PRO
United States District Judge

EXHIBIT E

Gary L. Koenigsberg
WOLF, BLOCK, SCHORR AND SOLIS-COHEN LLP
A Pennsylvania Limited Liability Partnership
101 Eisenhower Parkway
Roseland, NJ 07068
(973) 228-5700
Attorneys for Plaintiff,
Bel Fuse, Inc.

Joshua L. Raskin
WOLF, BLOCK, SCHORR AND SOLIS-COHEN LLP
A Pennsylvania Limited Liability Partnership
250 Park Avenue
New York, NY 10017
(212) 986-1116
Attorneys for Plaintiff,
Bel Fuse, Inc.

UNITED STATES DISTRICT COURT
FOR THE DISTRICT OF NEW JERSEY

BEL FUSE, INC. Plaintiff, v. HALO ELECTRONICS, INC. Defendant.	CIVIL ACTION NO. 2:07-cv-02168-HAA-ES **BRIEF IN SUPPORT OF BEL FUSE'S MOTION FOR LEAVE TO FILE SECOND AMENDED COMPLAINT**

TABLE OF CONTENTS

Page

STATEMENT OF FACTS 3

ARGUMENT 6

CONCLUSION 8

STATEMENT OF FACTS

Plaintiff Bel Fuse, Inc. ("Bel Fuse") filed its Complaint against Defendant Halo Electronics, Inc. ("Halo") in this action on May 8, 2007 ("the New Jersey Action") alleging infringement by Halo of Bel Fuse's U.S. Patent No. 5,736,910. Bel Fuse filed a First Amended Complaint on June 5, 2007 and, on July 27, 2007, Halo filed its Answer to Bel Fuse's First Amended Complaint. The Court has not yet scheduled a Rule 16 conference and the parties have not yet commenced discovery.

Concurrently with the foregoing, an unrelated patent infringement action was pending in the U.S. District Court for the District of Nevada between the same parties concerning different patents ("the Nevada Action"). That action was commenced on March 15, 2007, when Halo filed a Complaint for patent infringement against Bel Fuse and two unrelated parties. On July 27, 2007, Halo filed a First Amended Complaint in the Nevada Action.

On August 13, 2007, Bel Fuse filed a motion to dismiss Halo's First Amended Complaint in the Nevada Action for lack of personal jurisdiction and, on November 30, 2007, the Court in the Nevada Action conducted a hearing on Bel Fuse's motion. During that hearing, the Court intimated that the Nevada Action should be consolidated with the New Jersey Action and counsel for Halo admitted that "no legal barriers" preclude the consolidation of the cases.[1]

On December 7, 2007, the Court in the Nevada action entered an Order dismissing Halo's First Amended Complaint as against Bel Fuse. Exh. 1 to the Declaration of Joshua L. Raskin ("Raskin Decl."). On that same day, in an email dated December 7, 2007, counsel for Bel Fuse informed counsel for Halo that Bel Fuse intended to bring a motion for leave to amend its Complaint in the New Jersey Action to include claims for declaratory judgment that Bel Fuse

[1] Bel Fuse is still in the process of obtaining a transcript of the Nevada Court's November 30, 2007 hearing. Bel Fuse will supplement its submission with relevant portions of the transcript after it is obtained.

does not infringe the patents asserted in the dismissed Nevada Action. Exh. 2 to the Raskin Decl. In that email, counsel for Bel Fuse asked counsel for Halo if Halo would oppose the motion. To date, Bel Fuse has not received a response from Halo to the December 7, 2007 email.

As discussed further below, in light of the liberal standards for granting leave to amend and the fact that Halo will not be prejudiced by such leave to amend, and because there has been no undue delay, bad faith or dilatory motive in moving for leave to amend, it is respectfully submitted that the Court should grant Bel Fuse's motion for leave to amend.

ARGUMENT

According to Rule 15(a), after the time to amend as of right has passed, a party may amend by leave of the Court and such leave "shall be freely given when justice so requires." F.R.C.P. 15(a). The rules regarding the amendment of pleadings should be construed liberally, *C.I.R. v. Finley*, 265 F.2d 885 (1959), and, unless there is some justification for refusal, such as estoppel or prejudice, amendments are generally permitted. *Hess v. Gray*, 85 F.R.D. 15, 20 (1979); *Gambelli v. U.S.*, 904 F. Supp. 494, 497 (1995) (motions to amend are to be granted in absence of declared reasons such as undue delay, bad faith, dilatory motive or futility of amendment).

Denying leave to amend may be appropriate when the opposing party will be prejudiced by the amendment. *Dunham v. Innerst*, 50 F.R.D. 372, 373 (1970). However, if the opposing party receives proper notice and is not prejudiced, then the liberal construction of F.R.C.P. 15(a) should permit amendment of the pleadings. *See id.*

In the present case, there is no justification for refusing Bel Fuse's motion for leave to amend its Complaint to include causes of action relating to the patents asserted against Bel Fuse in the dismissed Nevada Action. Since discovery has not yet commenced in this case (indeed, the Court has not yet scheduled a Rule 16 conference), and since Halo brought the Nevada

Action against Bel Fuse so that any information pertaining to the causes of action Bel Fuse seeks to add to the present action is fully within Halo's possession, Halo cannot be prejudiced by the proposed amendment.

In addition, Bel Fuse has neither unduly delayed in seeking leave to amend its Complaint nor does Bel Fuse seek leave with a dilatory motive. The Nevada Action was dismissed as to Bel Fuse only three days ago and, on the same day that the action was dismissed, Bel Fuse's counsel emailed Halo's counsel indicating Bel Fuse's intention to seek leave to amend and asking for Halo's consent. Nor does Bel Fuse seek leave to amend in bad faith. Now that the Nevada Action has been dismissed as against Bel Fuse, Bel Fuse wishes to remove the cloud hovering over its head caused by Halo's allegations of patent infringement that were included in the Nevada Action. Justice requires that Bel Fuse be permitted to seek declaratory judgments on the patents that were at issue in the Nevada Action and the most logical venue to do that is here, where a patent infringement action in its nascent stages is already pending between the same two parties

CONCLUSION

For the reasons stated above, Plaintiff's motion for leave to amend the Complaint should be granted.

WOLF BLOCK SCHORR AND
SOLIS-COHEN, LLP

By:_____

Joshua L. Raskin (JR4613)
250 Park Avenue
New York, NY 10017

Attorneys for Plaintiff
Bel Fuse, Inc.