# EXHIBIT R

US006259804B1

(12) **United States Patent**
**Setlak et al.**

(10) **Patent No.: US 6,259,804 B1**
(45) **Date of Patent: *Jul. 10, 2001**

(54) **FINGERPRINT SENSOR WITH GAIN CONTROL FEATURES AND ASSOCIATED METHODS**

(75) Inventors: **Dale R. Setlak**, Melbourne; **John Cornett**, Melbourne Beach; **Brian Kilgore**, Melbourne; **Daryl Williams**, Palm Bay; **Dave Gebauer**, West Melbourne, all of FL (US)

(73) Assignee: **Authentic, Inc.**, Melbourne, FL (US)

( * ) Notice: This patent issued on a continued prosecution application filed under 37 CFR 1.53(d), and is subject to the twenty year patent term provisions of 35 U.S.C. 154(a)(2).

Subject to any disclaimer, the term of this patent is extended or adjusted under 35 U.S.C. 154(b) by 0 days.

(21) Appl. No.: **08/858,142**

(22) Filed: **May 16, 1997**

(51) **Int. Cl.**[7] ..... **G06K 9/00**
(52) **U.S. Cl.** ..... **382/124**; 382/126
(58) **Field of Search** ..... 382/124, 125, 382/168, 172, 270, 274, 126, 282, 287; 341/110, 118, 126, 139, 155; 348/294

(56) **References Cited**

U.S. PATENT DOCUMENTS

| | | | | |
|---|---|---|---|---|
| 3,781,672 | * | 12/1973 | Maltby et al. | 324/663 |
| 4,202,120 | | 5/1980 | Engel . | |
| 4,210,899 | | 7/1980 | Swonger et al. . | |
| 4,353,056 | * | 10/1982 | Tsikos | 382/124 |
| 4,557,504 | | 12/1985 | Kuhns . | |
| 4,768,021 | | 8/1988 | Ferraro . | |
| 4,811,414 | | 3/1989 | Fishbine et al. . | |
| 4,827,191 | * | 5/1989 | Chapman | 341/132 |
| 4,983,846 | | 1/1991 | Rios et al. . | |
| 4,993,068 | | 2/1991 | Piosenka et al. . | |
| 5,222,152 | | 6/1993 | Fishbine et al. . | |
| 5,224,173 | | 6/1993 | Kuhns et al. . | |
| 5,245,329 | | 9/1993 | Gokcebay . | |
| 5,280,527 | | 1/1994 | Gullman et al. . | |
| 5,325,442 | | 6/1994 | Knapp . | |
| 5,363,453 | | 11/1994 | Gagne et al. . | |
| 5,386,104 | | 1/1995 | Sime . | |

(List continued on next page.)

FOREIGN PATENT DOCUMENTS

| | | | |
|---|---|---|---|
| 37 12089 A1 | 10/1988 | (DE) | G06K/9/60 |
| 0 786 745 | 7/1997 | (EP) | G07C/9/00 |
| 86/06527 | 11/1986 | (WO) | G07C/9/00 |

OTHER PUBLICATIONS

Patent Abstracts of Japan, vol. 013, No. 407 (E–818), Sep. 8, 1989 & JP 01 146464 A (Oki Electric Ind Co).

Patent Abstracts of Japan, vol. 014, No. 185 (P–1036), Apr. 13, 1990 & JP 02 031377 A (Ricoh Co Ltd).

*Primary Examiner*—Phuoc Tran
(74) *Attorney, Agent, or Firm*—Allen, Dyer, Doppelt, Milbrath & Gilchrist, P.A.

(57) **ABSTRACT**

A fingerprint sensor includes an array of fingerprint sensing elements; analog-to-digital (A/D) converters having a controllable range; a scanner to perform sequential A/D conversions of predetermined ones of the array of fingerprint sensing elements; and a range determining and setting circuit for controlling the range of the A/D converters based upon prior A/D conversions to thereby provide enhanced conversion resolution. A plurality of A/D converters are preferably used for simultaneously converting analog signals from a corresponding plurality of fingerprint sensing elements. The A/D converters may include at least one reference voltage input for permitting setting of first and second points of the range. The range scale determining and setting circuit may generate a histogram based upon prior A/D conversions. In addition, the range scale determining and setting circuit may set a default range for initial ones of the fingerprint sensing elements.

**26 Claims, 6 Drawing Sheets**

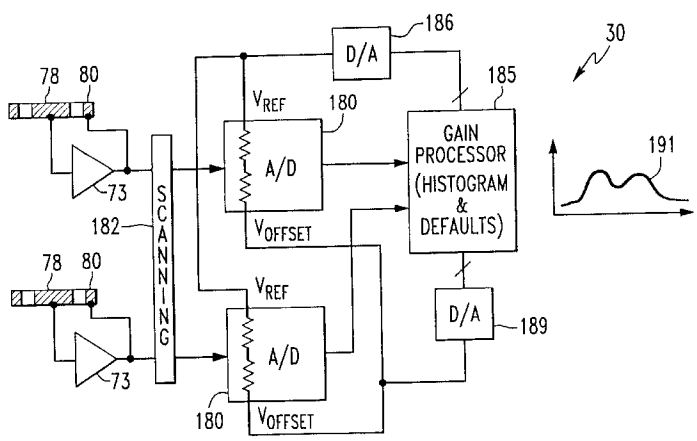

U.S. PATENT DOCUMENTS

| | | | | |
|---|---|---|---|---|
| 5,389,927 | * | 2/1995 | Turney et al. | 341/139 |
| 5,461,425 | * | 10/1995 | Fowler et al. | 348/294 |
| 5,467,403 | | 11/1995 | Fishbine et al. . | |
| 5,509,083 | | 4/1996 | Abtahi et al. . | |
| 5,513,272 | | 4/1996 | Bogosian, Jr. . | |
| 5,541,994 | | 7/1996 | Tomko et al. . | |
| 5,546,471 | | 8/1996 | Merjanian . | |
| 5,598,474 | | 1/1997 | Johnson . | |
| 5,603,179 | | 2/1997 | Adams . | |
| 5,613,712 | | 3/1997 | Jeffers . | |
| 5,623,552 | | 4/1997 | Lane . | |
| 5,778,089 | * | 7/1998 | Borza | 382/124 |
| 5,828,773 | * | 10/1998 | Setlak et al. | 382/126 |
| 6,023,522 | * | 2/2000 | Draganoff et al. | 382/124 |

* cited by examiner

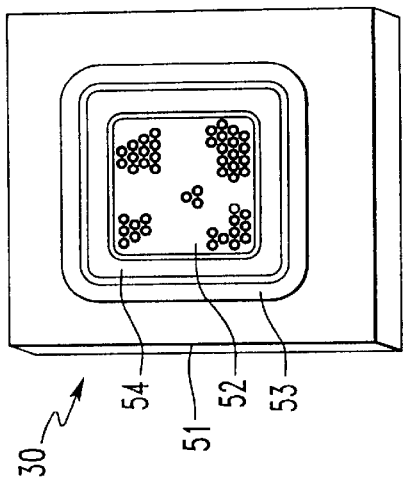
30
54
51
52
53

FIG. 1

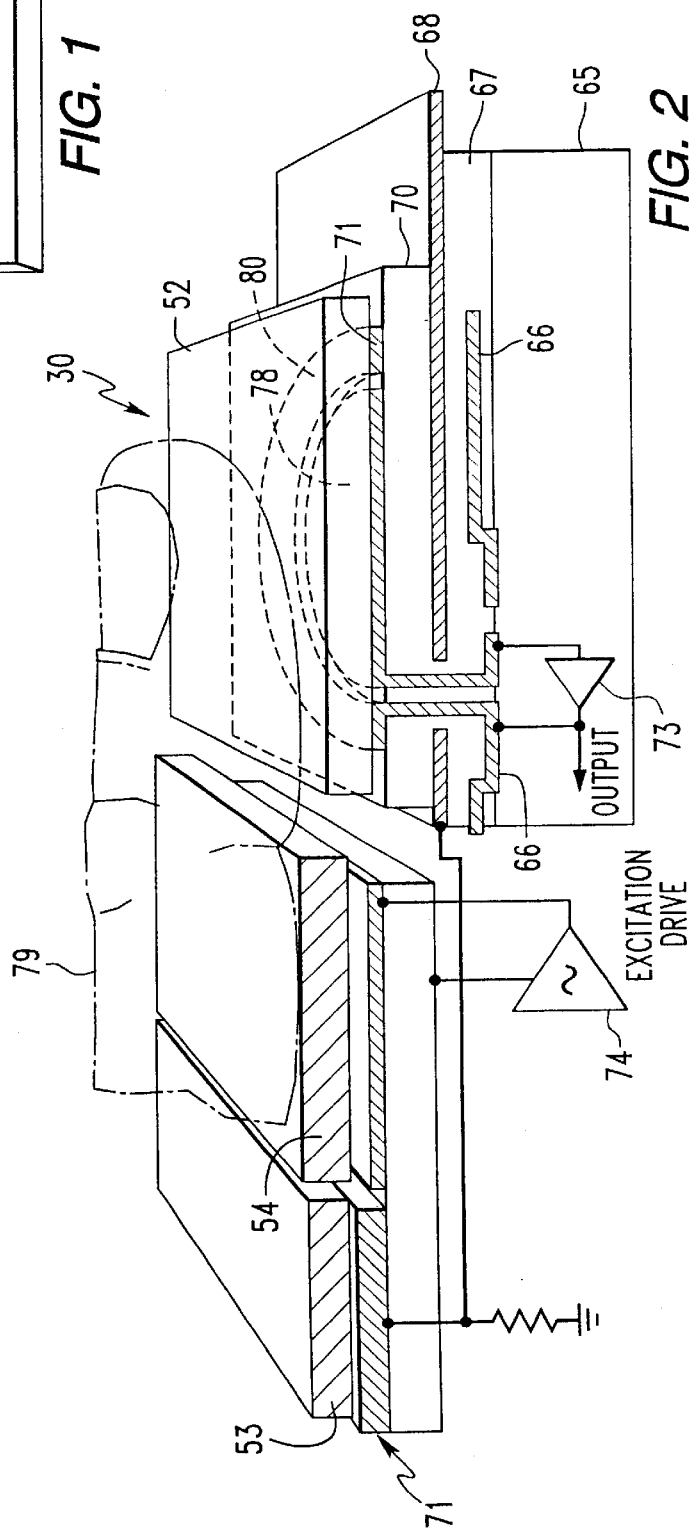
68
67
65
70
71
80
52
30
78
66
73
OUTPUT
66
EXCITATION
DRIVE
74
79
54
53
71

FIG. 2

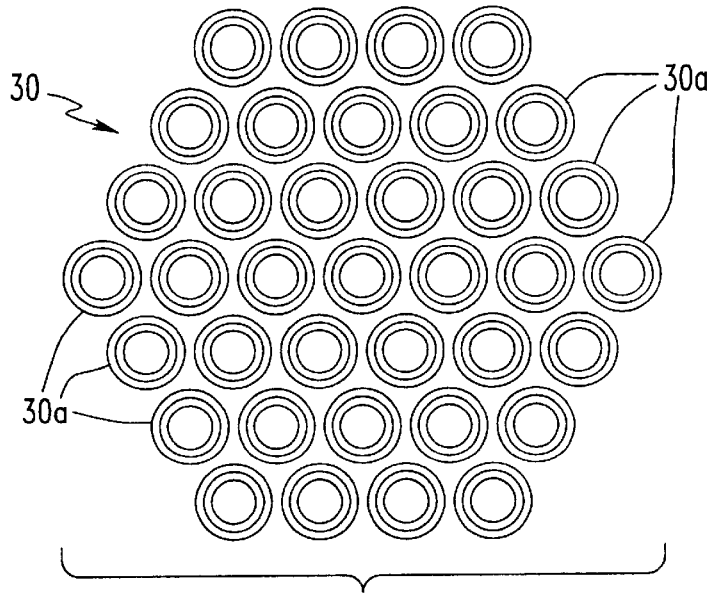
30
30a
30a

FIG.3

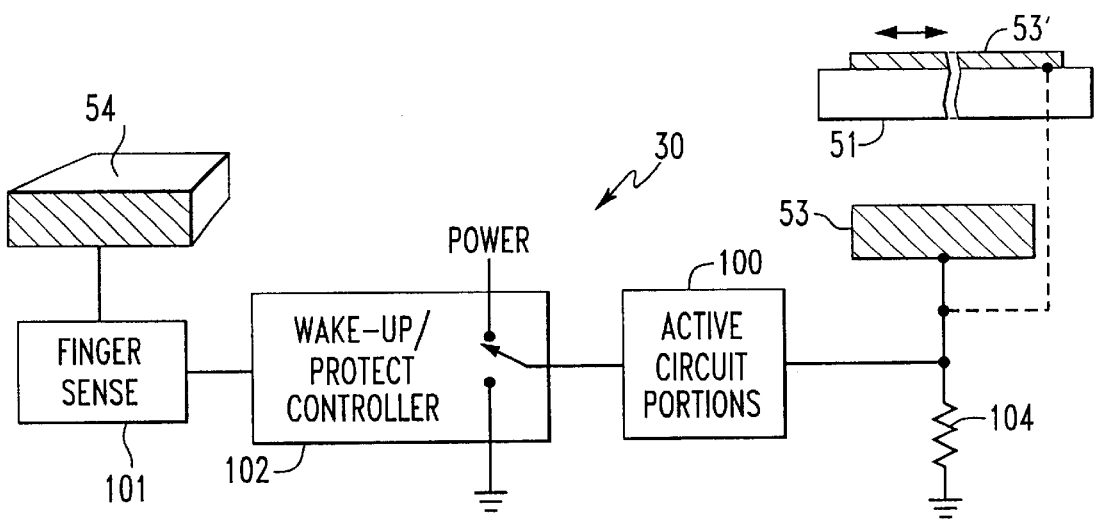
54
53'
51
30
53
POWER
100
FINGER SENSE
WAKE-UP/ PROTECT CONTROLLER
ACTIVE CIRCUIT PORTIONS
104
101
102

FIG.4

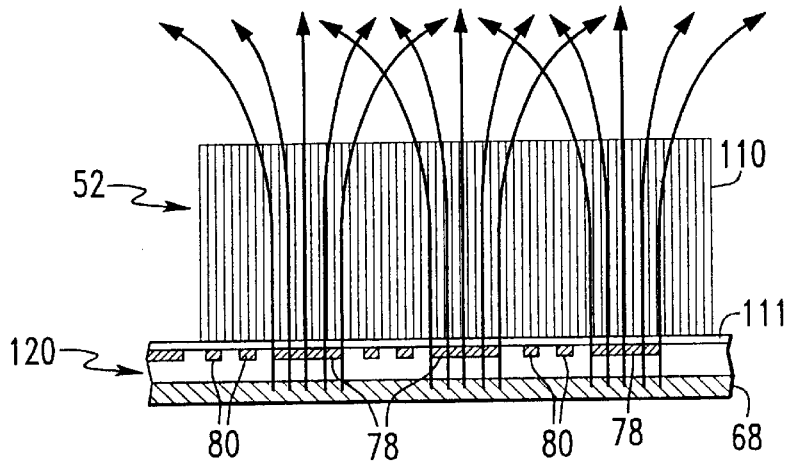


FIG. 5

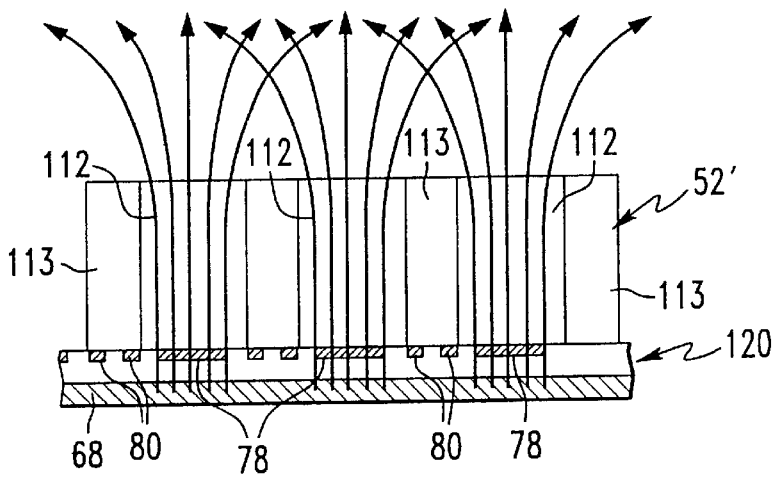


FIG. 6

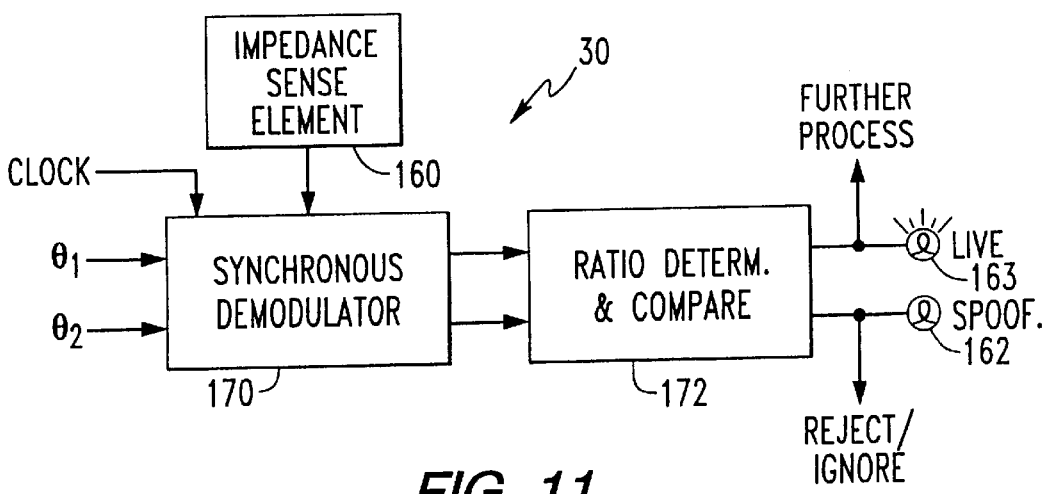


FIG. 11

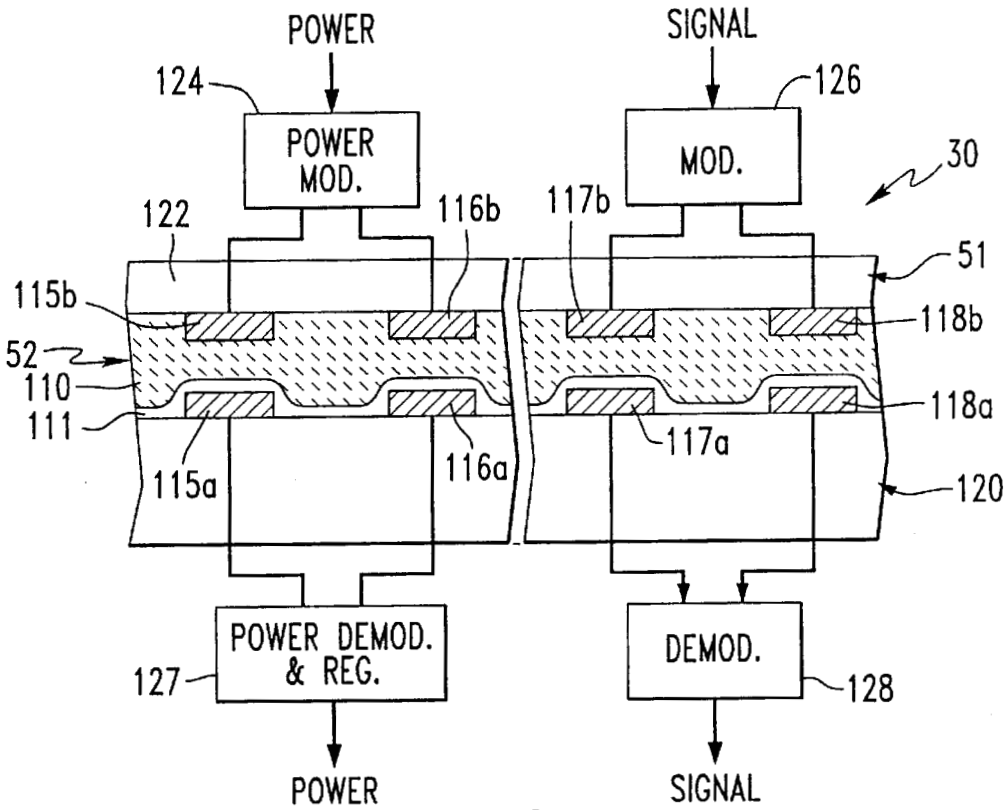
POWER
SIGNAL
124
126
POWER MOD.
MOD.
30
122
116b
117b
51
115b
118b
52
110
118a
111
117a
115a
116a
120
POWER DEMOD. & REG.
DEMOD.
127
128
POWER
SIGNAL

FIG. 7

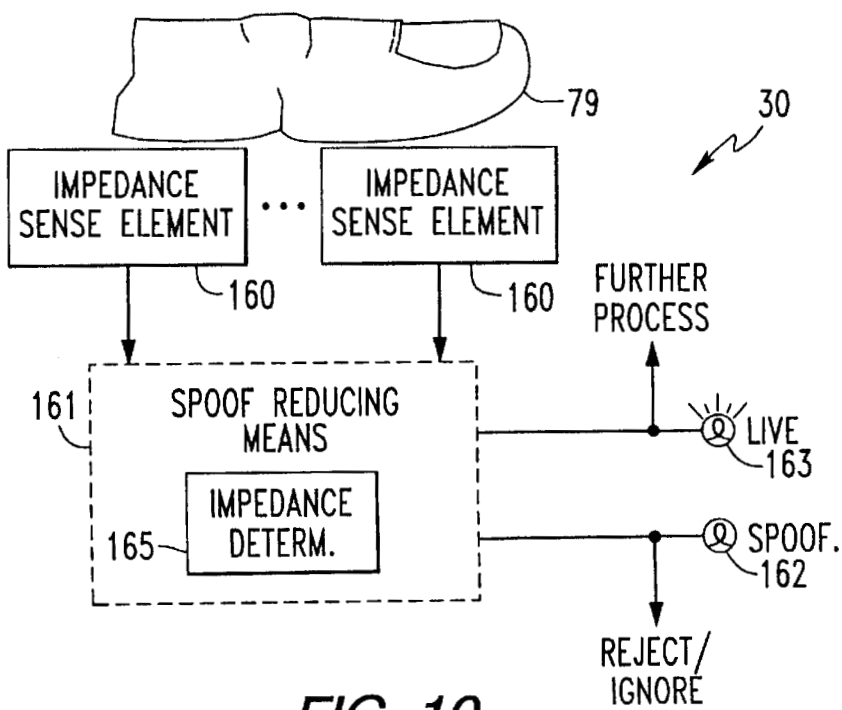
79
30
IMPEDANCE SENSE ELEMENT
IMPEDANCE SENSE ELEMENT
160
160
FURTHER PROCESS
161
SPOOF REDUCING MEANS
LIVE
163
IMPEDANCE DETERM.
165
SPOOF.
162
REJECT/ IGNORE

FIG. 10

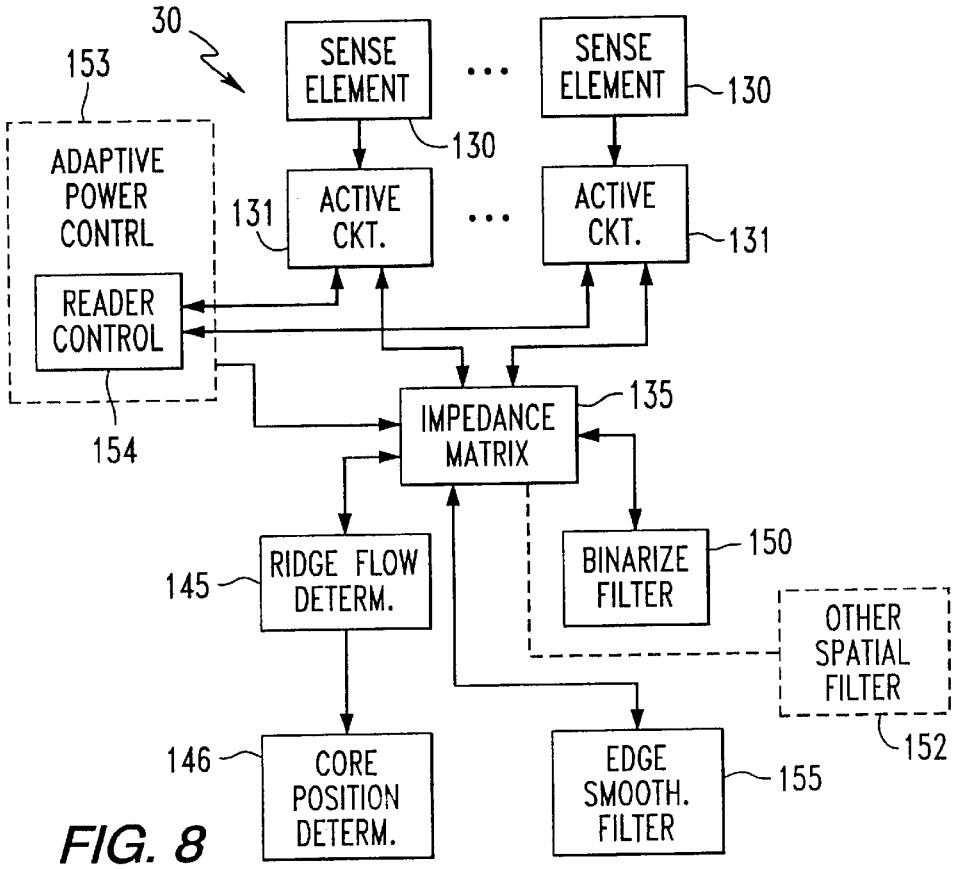
30
153
SENSE ELEMENT
SENSE ELEMENT
130
130
ADAPTIVE POWER CONTRL
131
ACTIVE CKT.
ACTIVE CKT.
131
READER CONTROL
154
IMPEDANCE MATRIX
135
145
RIDGE FLOW DETERM.
BINARIZE FILTER
150
OTHER SPATIAL FILTER
152
146
CORE POSITION DETERM.
EDGE SMOOTH. FILTER
155

FIG. 8

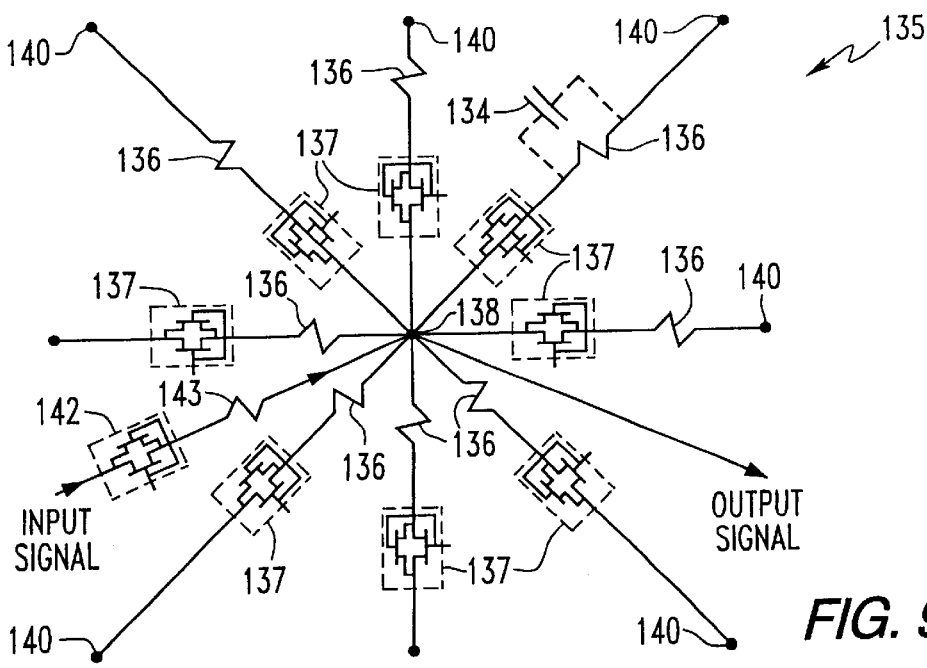
140
136
140
140
135
134
136
137
136
137
137
136
140
138
142
143
136
136
INPUT SIGNAL
137
137
OUTPUT SIGNAL
140
140

FIG. 9

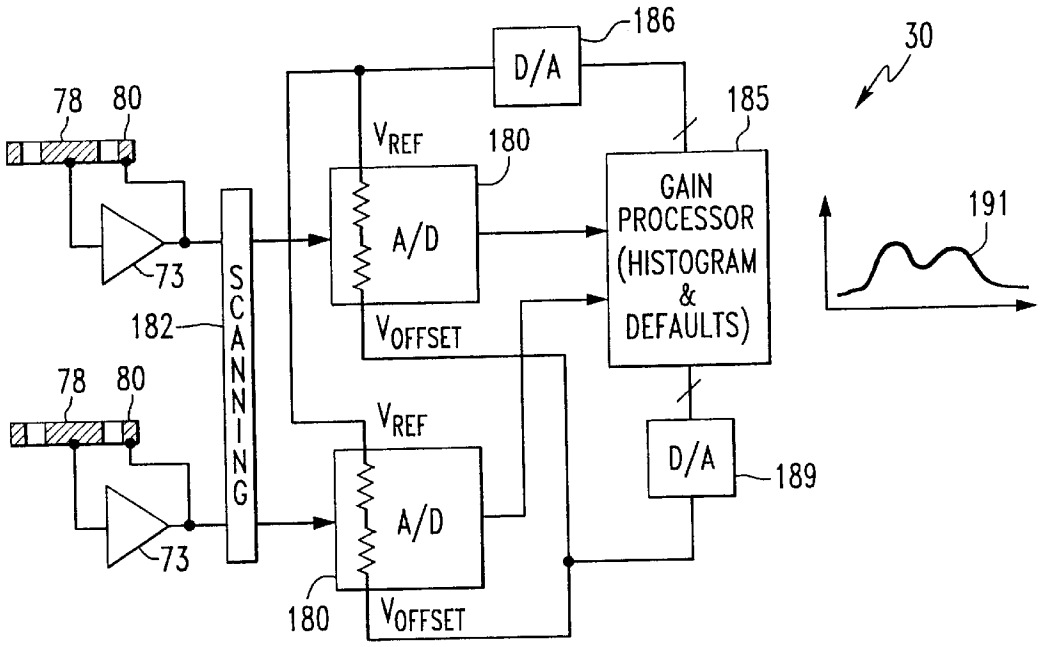
186
D/A
30
78
80
185
VREF
180
A/D
GAIN
PROCESSOR
(HISTOGRAM
&
DEFAULTS)
191
73
182
SCANNING
VOFFSET
78
80
VREF
D/A
189
A/D
73
180
VOFFSET

FIG. 12

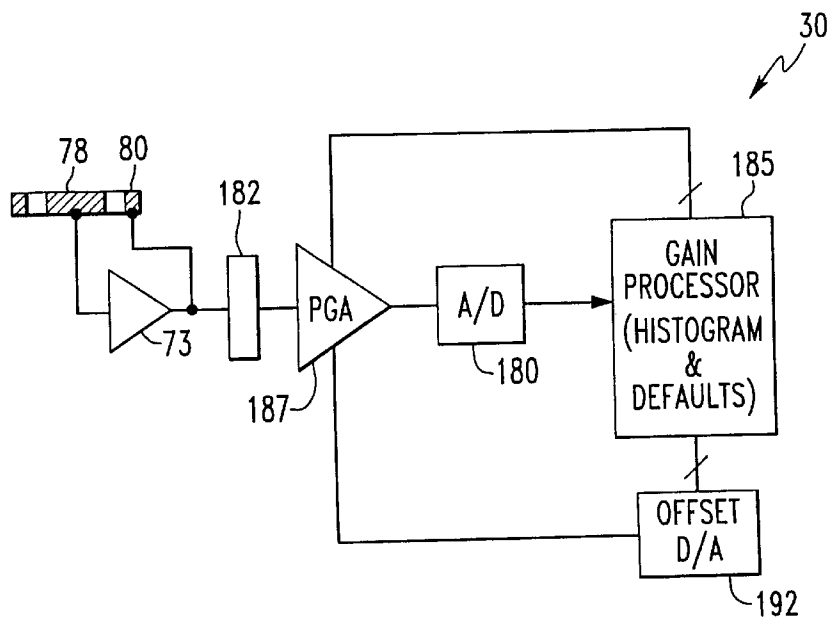
30
78
80
182
185
GAIN
PROCESSOR
(HISTOGRAM
&
DEFAULTS)
PGA
A/D
73
180
187
OFFSET
D/A
192

FIG. 13

# FINGERPRINT SENSOR WITH GAIN CONTROL FEATURES AND ASSOCIATED METHODS

## FIELD OF THE INVENTION

The present invention relates to the field of personal identification and verification, and, more particularly, to the field of fingerprint sensing and processing.

## BACKGROUND OF THE INVENTION

Fingerprint sensing and matching is a reliable and widely used technique for personal identification or verification. In particular, a common approach to fingerprint identification involves scanning a sample fingerprint or an image thereof and storing the image and/or unique characteristics of the fingerprint image. The characteristics of a sample fingerprint may be compared to information for reference fingerprints already in a database to determine proper identification of a person, such as for verification purposes.

A typical electronic fingerprint sensor is based upon illuminating the finger surface using visible light, infrared light, or ultrasonic radiation. The reflected energy is captured with some form of camera, for example, and the resulting image is framed, digitized and stored as a static digital image. For example, U.S. Pat. No. 4,210,899 to Swonger et al. discloses an optical scanning fingerprint reader cooperating with a central processing station for a secure access application, such as admitting a person to a location or providing access to a computer terminal. U.S. Pat. No. 4,525,859 to Bowles similarly discloses a video camera for capturing a fingerprint image and uses the minutiae of the fingerprints, that is, the branches and endings of the fingerprint ridges, to determine a match with a database of reference fingerprints.

Unfortunately, optical sensing may be affected by stained fingers or an optical sensor may be deceived by presentation of a photograph or printed image of a fingerprint rather than a true live fingerprint. In addition, optical schemes may require relatively large spacings between the finger contact surface and associated imaging components. Moreover, such sensors typically require precise alignment and complex scanning of optical beams. Accordingly, optical sensors may thus be bulky and be susceptible to shock, vibration and surface contamination. Accordingly, an optical fingerprint sensor may be unreliable in service in addition to being bulky and relatively expensive due to optics and moving parts.

U.S. Pat. No. 4,353,056 to Tsikos discloses another approach to sensing a live fingerprint. In particular, the patent discloses an array of extremely small capacitors located in a plane parallel to the sensing surface of the device. When a finger touches the sensing surface and deforms the surface, a voltage distribution in a series connection of the capacitors may change. The voltages on each of the capacitors is determined by multiplexor techniques. Unfortunately, the resilient materials required for the sensor may suffer from long term reliability problems. In addition, multiplexing techniques for driving and scanning each of the individual capacitors may be relatively slow and cumbersome. Moreover, noise and stray capacitances may adversely affect the plurality of relatively small and closely spaced capacitors.

U.S. Pat. No. 5,325,442 to Knapp discloses a fingerprint sensor including a plurality of sensing electrodes. Active addressing of the sensing electrodes is made possible by the provision of a switching device associated with each sensing



electrode. A capacitor is effectively formed by each sensing electrode in combination with the respective overlying portion of the finger surface which, in turn, is at ground potential. The sensor may be fabricated using semiconductor wafer and integrated circuit technology. The dielectric material upon which the finger is placed may be provided by silicon nitride or a polyimide which may be provided as a continuous layer over an array of sensing electrodes. Further conductors may be provided on the surface of the dielectric material remote from the sensing electrodes and extending over regions between the sensing electrodes, for example, as lines or in grid form, which conductors are grounded in order to improve the electrical contact to the finger surface.

Unfortunately, driving the array of closely spaced sensing electrodes as disclosed in the Knapp et al. patent may be difficult since adjacent electrodes may affect one another. Another difficulty with such a sensor may be its ability to distinguish ridges and valleys of a fingerprint when the conductivity of the skin and any contaminants may vary widely from person-to-person and even over a single fingerprint. Yet another difficulty with such a sensor, as with many optical sensors, is that different portions of the fingerprint may require relatively complicated post image collection processing to provide for usable signal levels and contrast to thereby permit accurate determination of the ridges and valleys of the fingerprint. For example, U.S. Pat. No. 4,811,414 to Fishbine et al. discloses methods for noise averaging, illumination equalizing, directional filtering, curvature correcting, and scale correcting for an optically generated fingerprint image. Unfortunately, the various processing steps are complex and require considerable computational power in a downstream processor. Signal processing of other fingerprint circuits may also be relatively complicated and therefore expensive and/or slow.

Greater advances in fingerprint sensing and matching for identification and verification are desirable for many applications. Unfortunately, current sensors and their associated circuitry may be too bulky, expensive and unreliable for a great many applications which would otherwise benefit from fingerprint identification and verification technology. In addition, fingerprint images generated by conventional sensors may vary considerably from individual-to-individual and for different sensing conditions. In addition, process variations in manufacturing may cause sensors to vary considerably from one to another. Accordingly, consistent results may be very difficult when using a conventional fingerprint sensor.

## SUMMARY OF THE INVENTION

In view of the foregoing background, it is therefore an object of the present invention to provide a fingerprint sensor and related methods so that the fingerprint sensor may accommodate variations in image signal intensities, such as between different fingers, for different sensing conditions, or based on manufacturing process variations, for example.

This and other objects, features and advantages in accordance with the present invention are provided by a fingerprint sensor including an array of fingerprint sensing elements; analog-to-digital (A/D) conversion means having a controllable range; scanning means to perform sequential A/D conversions of predetermined ones of the array of fingerprint sensing elements; and range determining and setting means for controlling the range of the A/D conversion means based upon prior A/D conversions to thereby provide enhanced conversion resolution. The conversion

resolution is enhanced despite variations in sensed fingers, conditions, or despite process variations resulting from manufacturing.

In one embodiment, the A/D conversion means preferably comprises a plurality or bank of A/D converters for simultaneously converting analog signals from a corresponding plurality of fingerprint sensing elements. By enabling dynamic exploitation of the full resolution range of the A/D converters, the accuracy of the sensing can be significantly improved.

The A/D conversion means may comprise at least one reference voltage input for permitting setting of the range. Accordingly, the range determining and setting means may comprise a processor, and at least one digital-to-analog converter connected between the processor and the at least one reference voltage input. In particular, the A/D converters may typically include a first reference voltage input and a second reference voltage input for setting corresponding first and second range points thereby defining the range. Alternately, or in addition thereto, the A/D conversion means may include at least one amplifier having a controllable gain for permitting setting of the range.

The range determining and setting means may comprise histogram generating means for generating a histogram based upon prior A/D conversions. In addition, the range determining and setting means may comprise default setting means for setting a default range for initial ones of the fingerprint sensing elements.

Each of the fingerprint sensing elements may be provided by an electric field sensing electrode and an amplifier associated therewith. A shield electrode amy also be associated with each electric field sensing electrode and be connected to a respective amplifier.

A method aspect of the invention is for operating a fingerprint sensor of a type comprising an array of fingerprint sensing elements. The method preferably comprises the steps of: converting analog signals from the array of fingerprint sensing elements to digital signals using A/D converters having a controllable range; performing sequential A/D conversions of predetermined ones of the array of fingerprint sensing elements; and controlling the range of the A/D converters based upon prior A/D conversions to thereby provide enhanced conversion resolution.

## BRIEF DESCRIPTION OF THE DRAWINGS

FIG. **1** is a top plan view of a fingerprint sensor in accordance with the present invention.

FIG. **2** is a schematic view of a circuit portion of the fingerprint sensor as shown in FIG. **1**.

FIG. **3** is a greatly enlarged top plan view of the sensing portion of the fingerprint sensor as shown in FIG. **1**.

FIG. **4** is a schematic diagram of another circuit portion of the fingerprint sensor as shown in FIG. **1**.

FIG. **5** is a greatly enlarged side cross-sectional view of a portion of the fingerprint sensor as shown in FIG. **1**.

FIG. **6** is a greatly enlarged side cross-sectional view of a portion of an alternate embodiment of the fingerprint sensor in accordance with the invention.

FIG. **7** is a greatly enlarged side cross-sectional view of another portion of the fingerprint sensor as shown in FIG. **1**.

FIG. **8** is a schematic block diagram of yet another circuit portion of the fingerprint sensor as shown in FIG. **1**.

FIG. **9** is a schematic circuit diagram of a portion of the circuit as shown in FIG. **8**.



FIG. **10** is a schematic block diagram of still another circuit portion of the fingerprint sensor as shown in FIG. **1**.

FIG. **11** is a schematic block diagram of an alternate embodiment of the circuit portion shown in FIG. **10**.

FIG. **12** is a schematic block diagram of an additional circuit portion of the fingerprint sensor as shown in FIG. **1**.

FIG. **13** is a schematic block diagram of an alternate embodiment of the circuit portion shown in FIG. **12**.

## DETAILED DESCRIPTION OF THE PREFERRED EMBODIMENTS

The present invention will now be described more fully hereinafter with reference to the accompanying drawings, in which preferred embodiments of the invention are shown. This invention may, however, be embodied in many different forms and should not be construed as limited to the embodiments set forth herein. Rather, these embodiments are provided so that this disclosure will be thorough and complete, and will fully convey the scope of the invention to those skilled in the art. Like numbers refer to like elements throughout. The scaling of various features, particularly layers in the drawing figures, have been exaggerated for clarity of explanation.

Referring to FIGS. **1–3**, the fingerprint sensor **30** in accordance with the invention is initially described. The illustrated sensor **30** includes a housing or package **51**, a dielectric layer **52** exposed on an upper surface of the package which provides a placement surface for the finger, and a plurality of output pins, not shown. A first conductive strip or external electrode **54** around the periphery of the dielectric layer **52**, and a second external electrode **53** provide contact electrodes for the finger **79** as described in greater detail below. The sensor **30** may provide output signals in a range of sophistication levels depending on the level of processing incorporated in the package as would be readily understood by those skilled in the art.

The sensor **30** includes a plurality of individual pixels or sensing elements **30***a* arranged in array pattern as perhaps best shown in FIG. **3**. As would be readily understood by those skilled in the art, these sensing elements are relatively small so as to be capable of sensing the ridges **59** and intervening valleys **60** of a typical fingerprint. As will also be readily appreciated by those skilled in the art, live fingerprint readings as from the electric field sensor **30** in accordance with the present invention may be more reliable than optical sensing, because the impedance of the skin of a finger in a pattern of ridges and valleys is extremely difficult to simulate. In contrast, an optical sensor may be deceived by a photograph or other similar image of a fingerprint, for example.

The sensor **30** includes a substrate **65**, and one or more active semiconductor devices formed thereon, such as the schematically illustrated amplifier **73**. A first metal layer **66** interconnects the active semiconductor devices. A second or ground plane electrode layer **68** is above the first metal layer **66** and separated therefrom by an insulating layer **67**. A third metal layer **71** is positioned over another dielectric layer **70**. In the illustrated embodiment, the first external electrode **54** is connected to an excitation drive amplifier **74** which, in turn, drives the finger **79** with a signal may be typically in the range of about 1 KHz to 1 MHz. Accordingly, the drive or excitation electronics are thus relatively uncomplicated and the overall cost of the sensor **30** may be relatively low, while the reliability is great.

An illustratively circularly shaped electric field sensing electrode **78** is on the insulating layer **70**. The sensing

electrode **78** may be connected to sensing integrated electronics, such as the illustrated amplifier **73** formed adjacent the substrate **65** as schematically illustrated, and as would be readily appreciated by those skilled in the art.

An annularly shaped shield electrode **80** surrounds the sensing electrode **78** in spaced relation therefrom. As would be readily appreciated by those skilled in the art, the sensing electrode **78** and its surrounding shield electrode **80** may have other shapes, such as hexagonal, for example, to facilitate a close packed arrangement or array of pixels or sensing elements **30***a*. The shield electrode **80** is an active shield which is driven by a portion of the output of the amplifier **73** to help focus the electric field energy and, moreover, to thereby reduce the need to drive adjacent electric field sensing electrodes **78**.

The sensor **30** includes only three metal or electrically conductive layers **66**, **68** and **71**. The sensor **30** can be made without requiring additional metal layers which would otherwise increase the manufacturing cost, and, perhaps, reduce yields. Accordingly, the sensor **30** is less expensive and may be more rugged and reliable than a sensor including four or more metal layers as would be appreciated by those skilled in the art.

Another important aspect of the present invention is that the amplifier **73** may be operated at a gain of greater than about one to drive the shield electrode **80**. Stability problems do not adversely affect the operation of the amplifier **73**. Moreover, the common mode and general noise rejection are greatly enhanced according to this feature of the invention. In addition, the gain greater than one tends to focus the electric field with resect to the sensing electrode **78** as will be readily appreciated by those skilled in the art.

In general, the sensing elements **30***a* operate at very low currents and at very high impedances. For example, the output signal from each sensing electrode **78** is desirably about 5 to 10 millivolts to reduce the effects of noise and permit further processing of the signals. The approximate diameter of each sensing element **30***a*, as defined by the outer dimensions of the shield electrode **80**, may be about 0.002 to 0.005 inches in diameter. The ground plane electrode **68** protects the active electronic devices from unwanted excitation. The various signal feedthrough conductors for the electrodes **78**, **80** to the active electronic circuitry may be readily formed as would be understood by those skilled in the art.

The overall contact or sensing surface for the sensor **30** may desirably be about 0.5 by 0.5 inches—a size which may be readily manufactured and still provide a sufficiently large surface for accurate fingerprint sensing and identification. The sensor **30** in accordance with the invention is also fairly tolerant of dead pixels or sensing elements **30***a*. A typical sensor **30** includes an array of about 256 by 256 pixels or sensor elements, although other array sizes are also contemplated by the present invention. The sensor **30** may also be fabricated at one time using primarily conventional semiconductor manufacturing techniques to thereby significantly reduce the manufacturing costs.

Turning now additionally to FIG. **4**, another aspect of the sensor **30** of the invention is described. The sensor may include power control means for controlling operation of active circuit portions **100** based upon sensing finger contact with the first external electrode **54** as determined by the illustrated finger sense block or circuit **101**. For example, the finger sense circuit **101** may operate based upon a change in impedance to an oscillator to thereby determine finger contact. Of course, other approaches for sensing contact with the finger are also contemplated by the invention. The power control means may include wake-up means for only powering active circuit portions upon sensing finger contact with the first external electrode to thereby conserve power. Alternately or additionally, the power control means may further comprise protection means for grounding active circuit portions upon not sensing finger contact with the first external electrode. In the illustrated embodiment, a combination of wake-up and protection controller circuits **101** are illustrated.

Moreover, the fingerprint sensor **30** may further comprise finger charge bleed means for bleeding a charge from a finger or other object upon contact therewith. The finger charge bleed means may be provided by the second external electrode **53** carried by the package **51** for contact by a finger, and a charge bleed resistor **104** connected between the second external electrode and an earth ground. As schematically illustrated in the upper right hand portion of FIG. **4**, the second electrode may alternately be provided by a movable electrically conductive cover **53**' slidably connected to the package **51** for covering the opening to the exposed upper dielectric layer **52**. A pivotally connected cover is also contemplated by the present invention. Accordingly, under normal conditions, the charge would be bled from the finger as the cover **53**' is moved to expose the sensing portion of the sensor **30**.

In addition, the finger charge bleed means and power control means may be such that the active portions remain grounded until the charge bleed means can remove the charge on the finger before powering the active circuit portions, such as by providing a brief delay during wake-up sufficient to permit the charge to be discharged through the resistor **104** as would be readily understood by those skilled in the art. Accordingly, power may be conserved in the sensor **30** and ESD protection provided by the sensor so that the sensor is relatively inexpensive, yet robust and conserves power.

Referring now additionally to FIG. **5** yet another significant feature of the sensor **30** is described. The dielectric covering **52** may preferably comprise a z-axis anisotropic dielectric layer **110** for focussing an electric field, shown by the illustrated field lines, at each of the electric field sensing electrodes **78**. In other words, the dielectric layer **110** may be relatively thick, but not result in defocussing of the electric fields propagating therethrough because of the z-axis anisotropy of the material. Typically there would be a trade-off between field focus and mechanical protection. Unfortunately, a thin film which is desirable for focussing, may permit the underlying circuit to be more easily subject to damage.

The z-axis anisotropic dielectric layer **110** of the present invention, for example, may have a thickness in range of about 0.0001 to 0.004 inches. Of course, the z-axis anisotropic dielectric layer **110** is also preferably chemically resistant and mechanically strong to withstand contact with fingers, and to permit periodic cleanings with solvents. The z-axis anisotropic dielectric layer **110** may preferably define an outermost protective surface for the integrated circuit die **120**. Accordingly, the overall dielectric covering **52** may further include at least one relatively thin oxide, nitride, carbide, or diamond layer **111** on the integrated circuit die **120** and beneath the z-axis anisotropic dielectric layer **110**. The thin layer **111** will typically be relatively hard, and the z-axis anisotropic dielectric layer **110** is desirably softer to thereby absorb more mechanical activity.

The z-axis anisotropic dielectric layer **110** may be provided by a plurality of oriented dielectric particles in a cured

matrix. For example, the z-axis anisotropic dielectric layer **110** may comprise barium titanate in a polyimide matrix. Those of skill in the art will appreciate other materials exhibiting z-axis anisotropy suitable for the present invention. For example, certain ceramics exhibit dielectric anisotropy as would also be appreciated by those skilled in the art.

Turning to FIG. **6**, another variation of a z-axis dielectric covering **52'** is schematically shown by a plurality of high dielectric portions **112** aligned with corresponding electric field sensing electrodes **78**, and a surrounding matrix of lower dielectric portions **113**. This embodiment of the dielectric covering **52'** may be formed in a number of ways, such as by forming a layer of either the high dielectric or low dielectric portions, selectively etching same, and filling the openings with the opposite material. Another approach may be to use polarizable microcapsules and subjecting same to an electric field during curing of a matrix material. A material may be compressed to cause the z-axis anisotropy. Laser and other selective processing techniques may also be used as would be readily understood by those skilled in the art.

Another aspect of the invention relates to being able to completely cover and protect the entire upper surface of the integrated circuit die **120**, and still permit connection and communication with the external devices and circuits as now further explained with reference to FIG. **7**. The third metal layer **71** (FIG. **2**) preferably further includes a plurality of capacitive coupling pads **116***a*–**118***a* for permitting capacitive coupling of the integrated circuit die **120**. Accordingly, the dielectric covering **52** is preferably continuous over the capacitive coupling pads **116***a*–**118***a* and the array of electric field sensing electrodes **78** of the pixels **30***a* (FIG. **1**). In sharp contrast to this feature of the present invention, it is conventional to create openings through an outer coating to electrically connect to the bond pads. Unfortunately, these openings would provide pathways for water and/or other contaminants to come in contact with and damage the die.

A portion of the package **51** includes a printed circuit board **122** which carries corresponding pads **115***b*–**118***b*. A power modulation circuit **124** is coupled to pads **115***b*–**116***b*, while a signal modulation circuit **126** is illustrative coupled to pads **117***b*–**118***b*. As would be readily understood by those skilled in the art, both power and signals may be readily coupled between the printed circuit board **122** and the integrated circuit die **120**, further using the illustrated power demodulation/regulator circuit **127**, and the signal demodulation circuit **128**. The z-axis anisotropic dielectric layer **110** also advantageously reduces cross-talk between adjacent capacitive coupling pads. This embodiment of the invention **30** presents no penetrations through the dielectric covering **52** for moisture to enter and damage the integrated circuit die **120**. In addition, another level of insulation is provided between the integrated circuit and the external environment.

For the illustrated fingerprint sensor **30**, the package **51** preferably has an opening aligned with the array of electric field sensing electrodes **78** (FIGS. **1–3**). The capacitive coupling and z-axis anisotropic layer **110** may be advantageously used in a number of applications in addition to the illustrated fingerprint sensor **30**, and particularly where it is desired to have a continuous film covering the upper surface of the integrated circuit die **120** and pads **116***a*–**118***a*.

Further aspects of the manufacturing of the sensor **30** including the z-axis anisotropic dielectric material are explained in U.S. patent application, Ser. No. 08/857,525, filed May 16, 1997, entitled "Direct Chip Attachment Method and Devices Produced Thereby". This patent application has attorney work docket no. 18763, is assigned to the present assignee, and the entire disclosure of which is incorporated herein by reference.

Referring additionally to FIGS. **8** and **9**, impedance matrix filtering aspects of the invention are now described. As shown in FIG. **8**, the fingerprint sensor **30** may be considered as comprising an array of fingerprint sensing elements **130** and associated active circuits **131** for generating signals relating to the fingerprint image. The illustrated sensor **30** also includes an impedance matrix **135** connected to the active circuits for filtering the signals therefrom.

As shown with more particular reference to FIG. **9**, the impedance matrix **135** includes a plurality of impedance elements **136** with a respective impedance element connectable between each active circuit of a respective fingerprint sensing element as indicated by the central node **138**, and the other active circuits (outer nodes **140**). The impedance matrix **135** also includes a plurality of switches **137** with a respective switch connected in series with each impedance element **136**. An input signal may be supplied to the central node **138** via the illustrated switch **142** and its associated impedance element **143**. The impedance element may one or more of a resistor as illustrated, and a capacitor **134** as would be readily appreciated by those skilled in the art.

Filter control means may operate the switches **137** to perform processing of the signals generated by the active circuits **131**. In one embodiment, the fingerprint sensing elements **130** may be electric field sensing electrodes **78**, and the active circuits **131** may be amplifiers **73** (FIG. **2**). Of course other sensing elements and active circuits may also benefit from the impedance matrix filtering of the present invention as would be readily understood by those skilled in the art.

Ridge flow determining means **145** may be provided for selectively operating the switches **137** of the matrix **135** to determine ridge flow directions of the fingerprint image. More particularly, the ridge flow determining means **145** may selectively operate the switches **137** for determining signal strength vectors relating to ridge flow directions of the fingerprint image. As would be readily understood by those skilled in the art, the ridge flow directions may be determined based upon well known rotating slit principles.

The sensor **30** may include core location determining means **146** cooperating with the ridge flow determining means **145** for determining a core location of the fingerprint image. The position of the core is helpful, for example, in extracting and processing minutiae from the fingerprint image as would also be readily understood by those skilled in the art.

As also schematically illustrated in FIG. **8**, a binarizing filter **150** may be provided for selectively operating the switches **137** to convert a gray scale fingerprint image to a binarized fingerprint image. Considered another way, the impedance matrix **135** may be used to provide dynamic image contrast enhancement. In addition, an edge smoothing filter **155** may be readily implemented to improve the image. As also schematically illustrated other spatial filters **152** may also be implemented using the impedance matrix **135** for selectively operating the switches **137** to spatially filter the fingerprint image as would be readily appreciated by those of skill in the art. Accordingly, processing of the fingerprint image may be carried out at the sensor **30** and thereby reduce additional downstream computational requirements.

As shown in the illustrated embodiment of FIG. **9**, the impedance matrix **135** may comprise a plurality of impedance elements with a respective impedance element **136**

connectable between each active circuit for a given fingerprint sensing element **130** and eight other active circuits for respective adjacent fingerprint sensing elements.

Yet another aspect of the invention is the provision of control means **153** for sequentially powering sets of active circuits **131** to thereby conserve power. Of course, the respective impedance elements **136** are desirably also sequentially connected to perform the filtering function. The powered active circuits **131** may be considered as defining a cloud or kernel as would be readily appreciated by those skilled in the art. The power control means **153** may be operated in an adaptive fashion whereby the size of the area used for filtering is dynamically changed for preferred image characteristics as would also be readily understood by those skilled in the art. In addition, the power control means **153** may also power only certain ones of the active circuits corresponding to a predetermined area of the array of sensing elements **130**. For example, every other active circuit **131** could be powered to thereby provide a larger area, but reduced power consumption as would also be understood by those skilled in the art.

Reader control means **154** may be provided to read only predetermined subsets of each set of active circuits **131** so that a contribution from adjacent active circuits is used for filtering. In other words, only a subset of active circuits **131** are typically simultaneously read although adjacent active circuits **131** and associated impedance elements **136** are also powered and connected, respectively. For example, 16 impedance elements **136** could define a subset and be readily simultaneously read. The subset size could be optimized for different sized features to be determined as would be readily appreciated by those skilled in the art.

Accordingly, the array of sense elements **130** can be quickly read, and power consumption substantially reduced since all of the active circuits **131** need not be powered for reading a given set of active circuits. For a typical sensor, the combination of the power control and impedance matrix features described herein may permit power savings by a factor of about 10 as compared to powering the full array.

It is another important advantage of the fingerprint sensor **30** according to present invention to guard against spoofing or deception of the sensor into incorrectly treating a simulated image as a live fingerprint image. For example, optical sensors may be deceived or spoofed by using a paper with a fingerprint image thereon. The unique electric field sensing of the fingerprint sensor **30** of the present invention provides an effective approach to avoiding spoofing based upon the complex impedance of a finger.

As shown in FIG. **10**, the fingerprint sensor **30** may be considered as including an array of impedance sensing elements **160** for generating signals related to a finger **79** or other object positioned adjacent thereto. In the embodiment described herein, the impedance sensing elements **160** are provided by electric field sensing electrodes **78** and amplifiers **73** (FIG. **2**) associated therewith. In addition, a guard shield **80** may be associated with each electric field sensing electrode **78** and connected to a respective amplifier **73**. Spoof reducing means **161** is provided for determining whether or not an impedance of the object positioned adjacent the array of impedance sensing elements **160** corresponds to a live finger **79** to thereby reduce spoofing of the fingerprint sensor by an object other than a live finger. A spoofing may be indicated, such as by the schematically illustrated lamp **163** and/or used to block further processing. Alternately, a live fingerprint determination may also be indicated by a lamp **164** and/or used to permit further processing of the fingerprint image as will be readily appreciated by those skilled in the art. Many other options for indicating a live fingerprint or an attempted spoofing will be readily appreciated by those skilled in the art.

In one embodiment, the spoof reducing means **161** may include impedance determining means **165** to detect a complex impedance having a phase angle in a range of about 10 to 60 degrees corresponding to a live finger **79**. Alternately, the spoof reducing means **161** may detect an impedance having a phase angle of about 0 degrees corresponding to some objects other than a live finger, such as a sheet of paper having an image thereon, for example. In addition, the spoof reducing means **161** may detect an impedance of 90 degrees corresponding to other objects.

Turning now to FIG. **11**, another embodiment of spoof reducing means is explained. The fingerprint sensor **30** may preferably includes drive means for driving the array of impedance sensing elements **160**, such as the illustrated excitation amplifier **74** (FIG. **2**). The sensor also includes synchronous demodulator means **170** for synchronously demodulating signals from the array of impedance sensing elements **160**. Accordingly, in one particularly advantageous embodiment of the invention, the spoof reducing means comprises means for operating the synchronous demodulator means **170** at at least one predetermined phase rotation angle. For example, the synchronous demodulator means **170** could be operated in a range of about 10 to 60 degrees, and the magnitude compared to a predetermined threshold indicative of a live fingerprint. A live fingerprint typically has a complex impedance within the range of 10 to 60 degrees.

Alternately, ratio generating and comparing means **172** may be provided for cooperating with the synchronous demodulator means **170** for synchronously demodulating signals at first and second phase angles $\theta_1$, $\theta_2$, generating an amplitude ratio thereof, and comparing the amplitude ratio to a predetermined threshold to determine whether the object is a live fingerprint or other object. Accordingly, the synchronous demodulator **170** may be readily used to generate the impedance information desired for reducing spoofing of the sensor **30** by an object other than a live finger. The first angle $\theta_1$ and the second $\theta_2$ may have a difference in a range of about 45 to 90 degrees, for example. Other angles are also contemplated by the invention as would be readily appreciated by those skilled in the art.

The fingerprint sensor **30** also includes an automatic gain control feature to account for a difference in intensity of the image signals generated by different fingers or under different conditions, and also to account for differences in sensor caused by process variations. It is important for accurately producing a fingerprint image, that the sensor can discriminate between the ridges and valleys of the fingerprint. Accordingly, the sensor **30** includes a gain control feature, a first embodiment of which is understood with reference to FIG. **12**.

As shown in FIG. **12**, the illustrated portion of the fingerprint sensor **30** includes an array of fingerprint sensing elements in the form of the electric field sensing electrodes **78** and surrounding shield electrodes **80** connected to the amplifiers **73**. Other fingerprint sensing elements may also benefit from the following automatic gain control implementations as will be appreciated by those skilled in the art.

The signal processing circuitry of the sensor **30** preferably includes a plurality of analog-to-digital (A/D) converters **180** as illustrated. Moreover, each of these A/D converters **180** may have a controllable scale. Scanning means **182**

sequentially connects different elements to the bank of A/D converters **180**. The illustrated gain processor **185** provides range determining and setting means for controlling the range of the A/D converters **180** based upon prior A/D conversions to thereby provide enhanced conversion resolution. The A/D converters **180** may comprise the illustrated reference voltage input $V_{ref}$ and offset voltage input $V_{offset}$ for permitting setting of the range as would be readily appreciated by those skilled in the at. Accordingly, the range determining and setting means may also comprise a first digital-to-analog D/A converter **186** connected between the gain processor **185** and the reference voltage $V_{ref}$ inputs of the A/D converters **180** as would also be readily understood by those skilled in the art. In addition, a second D/A converter **189** is also illustratively connected to the offset voltage inputs $V_{offset}$ from the gain processor **185**.

The gain processor **185** may comprise histogram generating means for generating a histogram, as described above, and based upon prior A/D conversions. The graph adjacent the gain processor **185** in FIG. **12** illustrates a typical histogram plot **191**. The histogram plot **191** includes two peaks corresponding to the sensed ridges and valleys of the fingerprint as would be readily appreciated by those skilled in the art. By setting the range for the A/D converters **180**, the peaks can be readily positioned as desired to thereby account for the variations discussed above and use the full resolution of the A/D converters **180**.

Turning additionally to FIG. **13**, the A/D converters **180** may include an associated input amplifier for permitting setting of the range. In this variation, the range determining and setting means may also comprise the illustrated gain processor **185**, and wherein the amplifier is a programmable gain amplifier (PGA) **187** connected to the processor. A digital word output from the gain processor **185** sets the gain of the PGA **187** so that full use of the resolution of the A/D converters **180** is obtained for best accuracy. A second digital word output from the gain processor **185** and coupled to the amplifier **187** through the illustrated D/A converter **192** may also control the offset of the amplifier as would also be readily appreciated by those skilled in the art.

The range determining and setting means of the gain processor **185** may comprise default setting means for setting a default range for initial ones of the fingerprint sensing elements. The automatic gain control feature of the present invention allows the D/A converters **180** to operate over their full resolution range to thereby increase the accuracy of the image signal processing.

Other aspects, advantages, and features relating to sensing of fingerprints are disclosed in copending U.S. patent application Ser. No. 08/592,469 entitled "Electric Field Fingerprint Sensor and Related Methods", and U.S. patent application Ser. No. 08/671,430 entitled "Integrated Circuit Device Having an Opening Exposing the Integrated Circuit Die and Related Methods", both assigned to the assignee of the present invention, and the entire disclosures of which are incorporated herein by reference. In addition, many modifications and other embodiments of the invention will come to the mind of one skilled in the art having the benefit of the teachings presented in the foregoing descriptions and the associated drawings. Therefore, it is to be understood that the invention is not to be limited to the specific embodiments disclosed, and that modifications and embodiments are intended to be included within the scope of the appended claims.

That which is claimed is:

**1**. A fingerprint sensor to enhance conversion resolution of ridges and valleys of sensed fingerprints, the fingerprint sensor comprising:

an array of fingerprint sensing elements, each element comprising an electric field sensing electrode and an amplifier associated therewith;

analog-to-digital (A/D) conversion means having a controllable range and for converting analog signals from said array of fingerprint sensing elements to digital signals based upon the range;

scanning means responsive to said array of fingerprint sensing elements and positioned in communication with said A/D conversion means for operating said A/D conversion means and said array of fingerprint sensing elements to perform sequential A/D conversions of predetermined ones of said array of fingerprint sensing elements; and

range determining and setting means responsive to each said A/D conversion means for controlling the range of said A/D conversion means based upon a plurality of the sequential A/D conversions performed by said A/D conversion means to thereby provide enhanced conversion resolution of ridges and valleys of sensed fingerprints.

**2**. A fingerprint sensor according to claim **1** wherein said A/D conversion means comprises a plurality of A/D converters for simultaneously converting analog signals from a corresponding plurality of fingerprint sensing elements.

**3**. A fingerprint sensor according to claim **1** wherein said A/D conversion means comprises at least one range input for permitting setting of at least one range point; and wherein said range determining and setting means comprises a processor, and at least one digital-to-analog converter connected between said processor and said at least one range input.

**4**. A fingerprint sensor according to claim **1** wherein said A/D conversion means comprises a first reference voltage input for permitting setting of a first range point.

**5**. A fingerprint sensor according to claim **4** wherein said A/D conversion means further comprises a second reference voltage input for permitting setting of a second range point.

**6**. A fingerprint sensor according to claim **1** wherein said A/D conversion means comprises at least one amplifier for permitting setting of the range.

**7**. A fingerprint sensor according to claim **1** wherein said range determining and setting means comprises histogram generating means for generating a histogram based upon the plurality of sequential A/D conversions.

**8**. A fingerprint sensor according to claim **1** wherein said range determining and setting means comprises default setting means for setting a default range for initial ones of said fingerprint sensing elements.

**9**. A fingerprint sensor according to claim **1** further comprising a shield electrode associated with each electric field sensing electrode and connected to a respective amplifier.

**10**. A fingerprint sensor to enhance conversion resolution of ridges and valleys of sensed fingerprints, the fingerprint sensor comprising:

an array of fingerprint sensing elements, each element comprising an electric field sensing electrode and an amplifier associated therewith;

at least one analog-to-digital (A/D) converter having at least one reference voltage input and for converting an analog signal from at least one fingerprint sensing element to a digital signal based upon the at least one reference voltage;

scanning means responsive to said array of fingerprint sensing elements and positioned in communication

with said at least one A/D converter for operating said at least one A/D converter and said array of fingerprint sensing elements to perform sequential A/D conversions of predetermined ones of said array of fingerprint sensing elements; and

reference voltage determining and setting means responsive to said at least one A/D converter for controlling the at least one reference voltage of said at least one A/D converter based upon a plurality of the sequential A/D conversions performed by said A/D conversion means to thereby provide enhanced conversion resolution of ridges and valleys of sensed fingerprints.

**11**. A fingerprint sensor according to claim **10** wherein said at least one A/D converter comprises a plurality of A/D converters for simultaneously converting analog signals from a corresponding plurality of fingerprint sensing elements.

**12**. A fingerprint sensor according to claim **10** wherein said reference voltage determining and setting means comprises a processor, and at least one digital-to-analog converter connected between said processor and said at least one reference voltage input.

**13**. A fingerprint sensor according to claim **10** further comprising at least one amplifier cooperating with said at least one A/D converter for permitting setting of the range thereof.

**14**. A fingerprint sensor according to claim **10** wherein said reference voltage determining and setting means comprises histogram generating means for generating a histogram based upon the plurality of sequential A/D conversions.

**15**. A fingerprint sensor according to claim **10** wherein said reference voltage determining and setting means comprises default setting means for setting at least one default reference voltage for initial ones of said fingerprint sensing elements.

**16**. A fingerprint sensor according to claim **10** further comprising a shield electrode associated with each electric field sensing electrode and connected to a respective amplifier.

**17**. A fingerprint sensor to enhance conversion resolution of ridges and valleys of sensed fingerprints, the fingerprint sensor comprising:

an array of fingerprint sensing elements, each element comprising an electric field sensing electrode and an amplifier associated therewith;

a plurality of analog-to-digital (A/D) converters each having at least one reference voltage input and for converting an analog signal from at least one fingerprint sensing element to a digital signal based upon the at least one reference voltage;

scanning means responsive to said array of fingerprint sensing elements and in communication with said plurality of A/D converters for operating said plurality of A/D converters and said array of fingerprint sensing elements to perform sequential A/D conversions of predetermined ones of said array of fingerprint sensing elements; and

reference voltage determining and setting means responsive to said plurality of A/D converters for controlling the at least one reference voltage of each of said plurality of A/D converters based upon a plurality of the sequential A/D conversions performed by said plurality of A/D converters to thereby provide enhanced conversion resolution of ridges and valleys of sensed fingerprints, said reference voltage determining and setting means comprising histogram generating means for generating a histogram based upon the plurality of the sequential A/D conversions.

**18**. A fingerprint sensor according to claim **17** wherein said reference voltage determining and setting means comprises a processor, and at least one digital-to-analog converter connected between said processor and said at least one reference voltage input.

**19**. A fingerprint sensor according to claim **17** further comprising a respective amplifier cooperating with each A/D converter for permitting setting of the range thereof.

**20**. A fingerprint sensor according to claim **17** wherein said reference voltage determining and setting means comprises default setting means for setting at least one default reference voltage for initial ones of said fingerprint sensing elements.

**21**. A fingerprint sensor according to claim **17** further comprising a shield electrode associated with each electric field sensing electrode and connected to a respective amplifier.

**22**. A method for sensing fingerprints using an array of fingerprint sensing elements, each element comprising an electric field sensing electrode and an amplifier associated therewith, to enhance conversion resolution of ridges and valleys of the sensed fingerprints, the method comprising the steps of:

sequentially converting analog signals from predetermined ones of the array of fingerprint sensing elements to digital signals using at least one A/D converter having a controllable range; and

determining and controlling the range of the at least one A/D converter based upon a plurality of the performed sequential A/D conversions performed by the at least one A/D converter to thereby provide enhanced conversion resolution of ridges and valleys of sensed fingerprints.

**23**. A method according to claim **22** wherein the range of the at least one A/D converter is controllable based upon at least one reference voltage; and wherein the step of determining and controlling the range comprises controlling the at least one reference voltage.

**24**. A method according to claim **22** wherein the step of converting analog signals comprises converting same using at least one amplifier having a controllable gain for permitting setting of the range; and wherein the step of determining and controlling the range comprises controlling the range using the amplifier.

**25**. A method according to claim **22** wherein the step of determining and controlling the range comprises generating a histogram based upon the plurality of sequential A/D conversions.

**26**. A method according to claim **22** wherein the step of determining and controlling the range comprises setting a default range for initial ones of the fingerprint sensing elements.

* * * * *