JAYE G. HEYBL (CA Bar No. 167,110)
BRIAN M. FITZGERALD (CA Bar No. 267,279)
KOPPEL PATRICK HEYBL & PHILPOTT
2815 Townsgate Road, Suite 215
Westlake Village, California 91361
Telephone: (805) 373-0060
Facsimile: (805) 373-0051
jheybl@koppelpatent.com
bfitzgerald@koppelpatent.com

Attorneys for Plaintiff
HOUWELING NURSERIES OXNARD, INC.

UNITED STATES DISTRICT COURT

CENTRAL DISTRICT OF CALIFORNIA – WESTERN DIVISION

HOUWELING NURSERIES OXNARD, INC.,

Plaintiff,

vs.

LITTLE LEAF FARMS, LLC., and DOES 1-10 inclusive,

Defendant.

CASE NO. 2:16-cv-04291

COMPLAINT FOR DAMAGES AND INJUNCTIVE RELIEF FOR:

PATENT INFRINGEMENT [35 U.S.C. § 271]

DEMAND FOR JURY TRIAL

Plaintiff Houweling Nurseries Oxnard, Inc. ("Houweling" or "Plaintiff") is world-recognized producer of produce and developer of greenhouse-related technologies. Houweling brings this action seeking injunctive relief and damages on account of patent infringement by Defendants Little Leaf Farms, LLC. ("Little Leaf"), and DOES 1 through 10, inclusive. Plaintiff alleges as follows:

JURISDICTION AND VENUE

1. This is an action for patent infringement arising under the patent laws of the United States, Title 35, United States Code, including 35 U.S.C. § 1, et seq.

2. This Court has subject matter jurisdiction over this action pursuant to 28 U.S.C. §§ 1331 and 1338.

3. On information and belief, Defendants do regular business in California and in this district. This Court has personal jurisdiction over Defendants at least because, among other things, on information and belief, Defendants conduct business in the State of California and in this judicial district and thus enjoy the privileges and protections of California law.

4. Venue in this Court is proper at least under the provisions of 28 U.S.C. § 1400(b) and 28 USC § 1391(c), at least because Defendants are subject to this Court's personal jurisdiction with respect to the action in question.

PARTIES

5. Houweling is an active California corporation with its principal place of business at 645 Laguna Road, Camarillo, CA 93012. Houweling does business in the Central District of California.

6. On information and belief, Little Leaf is a Delaware corporation with its principal place of business 84 Shady Brook Lane, Carlisle, Massachusetts. On information and belief, Little Leaf does business in the Central District of California.

7. Plaintiff does not know the true names and capacities, whether individual, corporate, associate, or otherwise, of the defendants named herein as DOES 1 through 10, inclusive. Plaintiff therefore sues them by use of fictitious names. Plaintiff is informed and

believes that Little Leaf, and Doe Defendants 1 through 10 are affiliated in some manner, and have direct, contributory, or vicarious responsibility for the wrongful acts as alleged herein. Plaintiff will amend this Complaint appropriately once the true names and capacities of Doe Defendants 1 through 10 are learned. As used below, the term "Defendants" shall collectively refer to the named defendant, Little Leaf, together with the defendants identified as DOES 1 through 10.

8. On information and belief, at all times herein mentioned, each of the Defendants was the agent of each of the remaining Defendants, and in doing the things alleged herein, was acting within the scope of such agency. On information and belief, the conduct of each of the Defendants as alleged herein was ratified by each of the other Defendants, and the benefits thereof were accepted by each of the other Defendants.

9. On information and belief, each of the Defendants induced the other Defendants to infringe upon Plaintiff's rights, participated in, and enabled the other Defendants to engage in the unlawful conduct herein alleged, or supervised that conduct, with knowledge that the conduct of other Defendants would infringe upon Plaintiff's rights, and constitute unfair competition and false and deceptive actions. Therefore each of the Defendants is jointly and severally liable as a contributory or vicarious infringer of Plaintiff's rights.

FACTUAL BACKGROUND

10. Houweling is a world-recognized leader in the development of greenhouse technologies and in the production of produce, for example, Houweling's world-famous tomatoes. One of Houweling's flagship developments is the patented Ultra Clima greenhouse system.

11. Casey Houweling invented the Ultra Clima greenhouse, an original and innovative greenhouse, and applied for patent protection with the United States Patent and Trademark Office ("USPTO"). The USPTO granted the patent as US Patent No. 8,707,617 ("the '617 patent"), which issued on April 29, 2014. Mr. Houweling assigned the rights to his patent to Houweling Nurseries Oxnard, Inc., which continues to be the owner by

assignment of the entire right, title and interest in the '617 patent. A true and correct copy of the '617 patent is attached to this complaint as Exhibit 1.

12. On information and belief, Defendants built and are using various greenhouse products, including a greenhouse located at or near 105 Walker Road, Devens, Massachusetts 01464 ("product in question").

13. The structural features of the product in question are the same as the structural features as set forth in the claims of '617 patent. By way of example and to enhance the clarity of this fact, images of the two greenhouse systems are shown side by side below:

FIG. 7 of the '617 Patent	The Product in Question
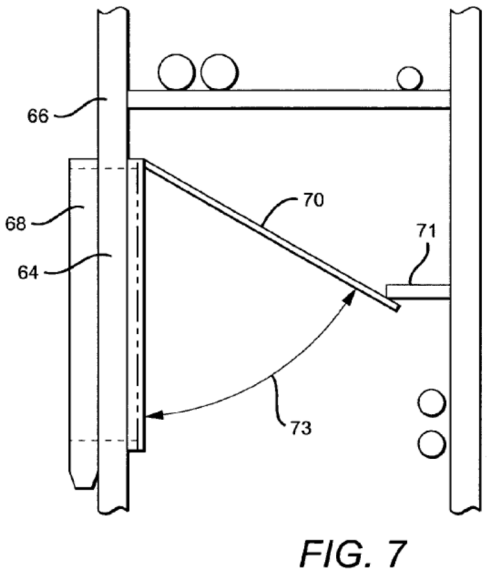 FIG. 7	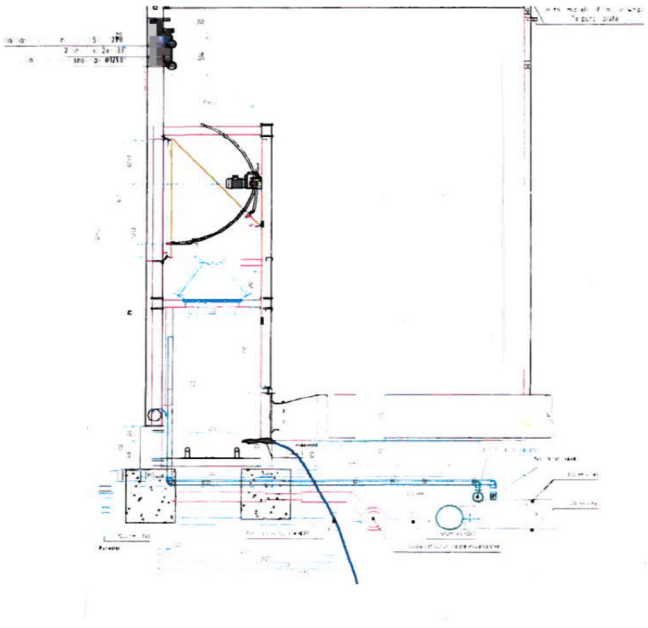

FIRST CAUSE OF ACTION

(INFRINGEMENT OF THE '617 PATENT; Against all Defendants; 35 U.S.C. § 271)

14. Plaintiff realleges and incorporates by reference the full text of all of the foregoing numbered paragraphs, photographs, figures, and tables as though each such paragraph, photograph, figure, and table has been fully set forth herein.

15. Houweling is the assignee and owner of all rights, title, and interest to the '617 patent, entitled "*Greenhouse and Forced Greenhouse Climate Control System and Method*," which was duly and legally issued by the United States Patent and Trademark Office on April 29, 2014, and which has been dully and legally assigned to Houweling. The assignment of the '617 patent is recorded at the United States Patent and Trademark Office as Reel/Frame 019648/0654. A true and correct copy of the '617 patent is attached as Exhibit 1 and is incorporated herein by reference. The '617 patent is valid and enforceable.

16. On information and belief, Defendants infringe the '617 patent by making, using, selling, offering for sale or importing greenhouse products covered by the '617 patent, including without limitation the product in question, as well as Defendants' other products and services incorporating greenhouse products, and various versions thereof. By way of example only, and without limitation, Defendants infringe, literally and/or under the doctrine of equivalents, at least the claims 1, 2, 4, 5, 7, 9, 17, 18, 19, 21, 22, and 29 (collectively "the asserted claims") of the '617 patent under 35 U.S.C. § 271(a-c), including but not limited to by making, using, offering for sale, importing and/or selling the patented product without the authority of Houweling, and/or by contributing to and/or inducing such infringement of the '617 patent.

17. On information and belief, and by way of example, the product in question incorporates a greenhouse with a climate control section, the product in question comprising a configuration of vents, louvers and tubes allowing for the utilization of

ambient air, recirculated air or a combination thereof, such that the product in question satisfies the limitations of at least one of the asserted claims of the '617 patent.

18. Defendants do not have a license or permission to use the '617 patent.

19. On information and belief, before their first acts of infringement, Defendants knew of Houweling's Ultra Clima greenhouse, knew the Ultra Clima greenhouse was patent-protected, knew their infringing greenhouse product was substantially similar in such manner as would infringe on the '617 patent, and knew Defendants' use of that design was unauthorized. Defendants nevertheless deliberately of in willful blindness carried out the acts of infringement described herein.

20. As a result of Defendants' infringement of the '617 patent, Houweling has been irreparably injured. Unless such infringing acts are enjoined by this Court, Houweling will continue to suffer irreparable injury.

21. On information and belief, Defendants' conduct as alleged above has damaged and will continue to damage Plaintiff, or is likely to damage Plaintiff.

22. On information and belief, as a result of their conduct as alleged above, Defendants have been unjustly enriched and have wrongfully profited.

23. On information and belief, despite knowledge of the '617 patent, Defendants will continue to infringe this patent with reckless disregard of the '617 patent, by continuing to infringe the patent when they knew or should have known that their actions constituted infringement of the claimed design of the '617 patent. Upon information and belief, Defendants have acted and/or are continuing to act despite an objectively high likelihood that their actions constitute direct and/or indirect infringement of a valid patent.

///

///

PRAYER FOR RELIEF

WHEREFORE, Plaintiff Houweling Nurseries Oxnard, Inc. prays for relief as follows:

A. Entry of judgment against Defendants, and for Houweling, for infringement of the '617 patent;

B. Entry of judgment holding Defendants jointly and severally liable for infringement of the '617 patent;

C. A post-judgment accounting of damages for the period of infringement of the '617 patent following the period of damages established by Houweling at trial;

D. An order preliminarily and then permanently enjoining Defendants and their respective officers, directors, agents, servants, affiliates, employees, divisions, branches, subsidiaries, parents, and all others acting in active concert or participation with them, from continued acts of infringement of the '617 patent;

E. If a permanent injunction is not granted, a judicial determination of the conditions of future infringement such as a royalty bearing compulsory license or such other relief as the Court deems appropriate;

F. An order that Defendants be ordered to surrender for destruction of all products, containers, labels, advertisements, promotional materials, and other materials constituting an infringement of Houweling's patent or the means by which such infringement is facilitated;

G. That Plaintiff be awarded its damages according to proof;

H. That Plaintiff be awarded the profits acquired by Defendants through Defendants' unlawful acts;

I. That the Court increase and enhance by three times any award of damages and/or profits based on Defendants' willfulness;

J. An order declaring that this is an exceptional case within the meaning of 35 U.S.C. §285;

K. An award of prejudgment interest, post-judgment interest, costs and disbursements, and attorney's fees; and

L. Such other and further relief as the Court deems proper in law or equity.

Respectfully submitted,

DATED: June 15, 2016 By: /s/ Jaye G. Heybl

JAYE G. HEYBL (CA Bar No. 167,110)
BRIAN M. FITZGERALD (CA Bar No. 267,279)
KOPPEL PATRICK HEYBL & PHILPOTT
2815 Townsgate Road, Suite 215
Westlake Village, California 91361
Telephone: (805) 373-0060
Facsimile: (805) 373-0051
jheybl@koppelpatent.com
bfitzgerald@koppelpatent.com

Attorneys for Plaintiff
Houweling Nurseries Oxnard, Inc.

DEMAND FOR JURY TRIAL

Pursuant to Rule 38(b) of the Federal Rules of Civil Procedure and Local Rule 38-1, Plaintiff Houweling Nurseries Oxnard, Inc. hereby demands a trial by jury of any and all issues triable of right by a jury pursuant to the Seventh Amendment to the United States Constitution or as given by a statute of the United States.

DATED: June 15, 2016 By: /s/ Jaye G. Heybl

JAYE G. HEYBL (CA Bar No. 167,110)
BRIAN M. FITZGERALD (CA Bar No. 267,279)
KOPPEL PATRICK HEYBL & PHILPOTT
2815 Townsgate Road, Suite 215
Westlake Village, California 91361
Telephone: (805) 373-0060
Facsimile: (805) 373-0051
jheybl@koppelpatent.com
bfitzgerald@koppelpatent.com

Attorneys for Plaintiff
Houweling Nurseries Oxnard, Inc.