CCT

Larry D. Thompson, Jr. (Pro Hac Vice Pending)
Matthew Antonelli (Pro Hac Vice Pending)
Antonelli, Harrington & Thompson LLP
4200 Montrose Blvd., Suite 430
Houston, Texas 77006
(713) 581-3006/FAX (713) 581-3020
larry@ahtlawfirm.com

Daniel S. Agle, Bar No. 251090
Frank C. Olah, Bar No. 247843
KLINEDINST PC
777 S. Figueroa St., Suite 2800
Los Angeles, California 90017
(213) 406-1100/FAX (213) 406-1101
dagle@klinedinstlaw.com

Attorneys for Plaintiff
GUARDIAN MEDIA
TECHNOLOGIES, LTD

FILED
CLERK U.S. DISTRICT COURT
JAN 31 2014
CENTRAL DISTRICT OF CALIFORNIA

UNITED STATES DISTRICT COURT

CENTRAL DISTRICT OF CALIFORNIA

GUARDIAN MEDIA TECHNOLOGIES, LTD,

Plaintiff,

v.

OVERSTOCK.COM, INC.

Defendant.

Case No. CV14-0757 DDP-RZx

ORIGINAL COMPLAINT FOR PATENT INFRINGEMENT

Courtroom:
Judge:
Magistrate Judge:
Complaint Filed:
Trial Date:

Plaintiff GUARDIAN MEDIA TECHNOLOGIES, LTD. files this Complaint against the above-named Defendant, based on its own knowledge as to itself and its own actions, and based on information and belief as to all other matters, as follows:

PARTIES

1. Guardian Media Technologies, Ltd. ("Guardian") is a Texas limited partnership. Guardian has its principal place of business in Longview, TX.

///

2. Upon information and belief, Defendant Overstock.com, Inc. ("Overstock") is a corporation organized and existing under the laws of the State of Delaware with its principal place of business located at 6350 South 3000 East, Salt Lake City, UT.

JURISDICTION AND VENUE

3. This is an action for infringement of a United States patent arising under 35 U.S.C. §§ 271, 281, and 284-285, among others. This Court has subject matter jurisdiction of the action under 28 U.S.C. §1331 and §1338(a).

4. Venue is proper in this district pursuant to 28 U.S.C. §§ 1391 and 1400(b). Upon information and belief, Defendant has transacted business in this district, and has committed and/or induced acts of patent infringement in this district.

5. Upon information and belief, Defendant is subject to this Court's specific and general personal jurisdiction pursuant to due process and/or the California Long Arm Statute, due at least to Defendant's substantial business in this forum, including: (i) at least a portion of the infringements alleged herein; and (ii) regularly doing or soliciting business, engaging in other persistent courses of conduct, and/or deriving substantial revenue from goods and services provided to individuals in California and in this district.

COUNT I

INFRINGEMENT OF U.S. PATENT NO. 4,930,160

6. On May 29, 1990, United States Patent No. 4,930,160 ("the '160 patent") was duly and legally issued by the United States Patent and Trademark Office for an invention entitled "Automatic Censorship of Video Programs." A true and correct copy of the '160 patent is attached hereto as Exhibit A.

7. On April 7, 2009, the United States Patent and Trademark Office issued a Reexamination Certificate for the '160 patent, which confirmed the

///

patentability of Claims 3, 6, 7, 16, 19, and 20 of the '160 Patent. A true and correct copy of this Reexamination Certificate is attached hereto as Exhibit B.

8. Guardian is the owner of the '160 patent with all substantive rights in and to that patent, including the sole and exclusive right to prosecute this action and enforce the '160 patent against infringers, and to collect damages for all relevant times. The '160 patent is expired.

9. As it pertains to this lawsuit, the '160 patent generally relates to parental control features contained in DVD players and televisions offered for sale by Defendant that allow owners of such devices to restrict viewing of certain movies and other video content based on the particular program's rating. See 47 C.F.R. 15.120.

10. Upon information and belief, prior to the expiration of the '160 patent, Defendant directly or through intermediaries, made, had made, installed, used, imported, provided, supplied, distributed, sold, and/or offered for sale televisions, DVD players, and/or other products that infringed or, when used, infringed one or more claims of the '160 patent.

11. The aforementioned accused products were made by or for one or more of the following companies, or were sold under one or more of the following brands, as applicable: Accurian; Akai; Apex Digital; Averatec; Axess; Axion; Curtis; Cyberhome; Dual; Durabrand; Dynex; Envision; GPX/Digital Products International; Hannspree; Insignia; Konka Group Co., Ltd.; Loewe; Mintek; Naxa; Sceptre; Soyo; Sungale; Supersonic; Sylvania; The Rotel Co., Ltd.; Trutech; Venturer; Zenith; Ziamen Overseas Chinese Electronic Company ("Xoceco").

12. Guardian has been damaged as a result of the infringing conduct by Defendant alleged above and, thus, Defendant is liable to Guardian in an amount that adequately compensates it for their infringements, which, by law, cannot be less than a reasonable royalty, together with interest and costs as fixed by this Court under 35 U.S.C. § 284.

13. Guardian and/or its predecessors-in-interest have satisfied all obligations set forth in 35 U.S.C. § 287 required to collect damages for the full period allowed by law according to 35 U.S.C. § 286.

TOLLING AGREEMENT

14. On July 14, 2009, Defendant and Guardian entered into a Tolling Agreement that postponed the resolution of Guardian's claims against Defendant.

15. The Tolling Agreement provides that the relevant period for damages in a subsequent suit would be calculated based on the original suit's filing date (i.e., December 22, 2008).

JURY DEMAND

Guardian hereby requests a trial by jury pursuant to Rule 38 of the Federal Rules of Civil Procedure of any issues so triable by right.

PRAYER FOR RELIEF

Guardian requests that the Court find in its favor and against Defendant, and that the Court grant Guardian the following relief:

a. Judgment that one or more claims of United States Patent No. 4,930,160 has been infringed, either literally and/or under the doctrine of equivalents, by Defendant;

b. Judgment that Defendant account for and pay to Guardian all damages to and costs incurred by Guardian because of Defendant's infringing activities and other conduct complained of herein;

c. That Guardian be granted pre-judgment and post-judgment interest on the damages caused by Defendant's infringing activities and other conduct complained of herein;

d. That this Court declare this an exceptional case and award Guardian its reasonable attorney's fees and costs in accordance with 35 U.S.C. § 285; and

///

///

e. That Guardian be granted such other and further relief as the Court may deem just and proper under the circumstances.

KLINEDINST PC

DATED: January 30, 2014

By:
Daniel S. Agle
Attorneys for Plaintiff
GUARDIAN MEDIA
TECHNOLOGIES, LTD

EXHIBIT A

United States Patent [19]

Vogel

[11] **Patent Number: 4,930,160**

[45] **Date of Patent: May 29, 1990**

[54] **AUTOMATIC CENSORSHIP OF VIDEO PROGRAMS**

[76] Inventor: **Peter S. Vogel**, 28 Adeline Street, Faulconbridge NSW 2776, Australia

[21] Appl. No.: **237,176**

[22] Filed: **Aug. 29, 1988**

[30] **Foreign Application Priority Data**

Sep. 2, 1987 [AU] Australia PI4107

[51] **Int. Cl.**[5] **H04K 1/00**

[52] **U.S. Cl.** **380/23**; 358/84; 358/349; 455/2; 455/4; 380/20; 340/825.34

[58] **Field of Search** ..... 380/3-5, 380/23, 20; 364/200, 900, DIG. 545; 358/84, 86, 139, 908, 349; 455/2, 4-6, 67-70; 340/825.31, 825.34

[56] **References Cited**

U.S. PATENT DOCUMENTS

3,859,457	1/1975	Kirk, Jr.	358/86 X
3,919,479	11/1975	Moon et al.	358/84 X
4,331,974	5/1982	Cogswell et al.	358/86
4,520,404	5/1985	Von Kohorn	358/84 X
4,530,008	7/1985	McVoy	380/23
4,605,973	8/1986	Von Kohorn	455/4 X
4,620,229	10/1986	Amano et al.	358/349
4,685,131	8/1987	Horne	358/86 X
4,718,107	1/1988	Hayes	455/4
4,750,213	6/1988	Novak	455/67
4,814,883	3/1989	Perine et al.	358/84 X

Primary Examiner—Stephen C. Buczinski
Assistant Examiner—Bernarr Earl Gregory

[57] **ABSTRACT**

A video program is received from a broadcast or video recording and displayed for viewing. On receipt of a prescribed classification code or group of codes display is switched to an alternative source. The classification code can be encoded into the broadcast or tape being viewed, or can originate from a separate source. The alternative material displayed can be another broadcast, a local recording, a locally-generated pattern, or other material. The codes which cause the display to be switched to the alternative source can be set by the user after entering a personal identity number.

26 Claims, 5 Drawing Sheets

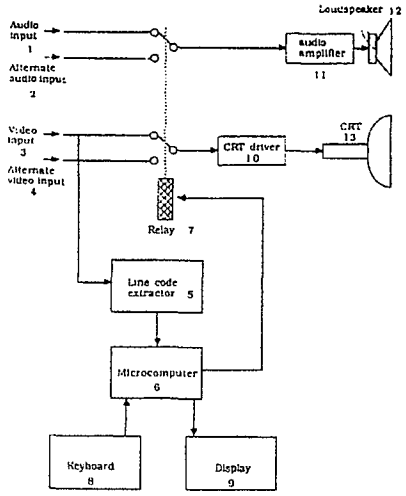

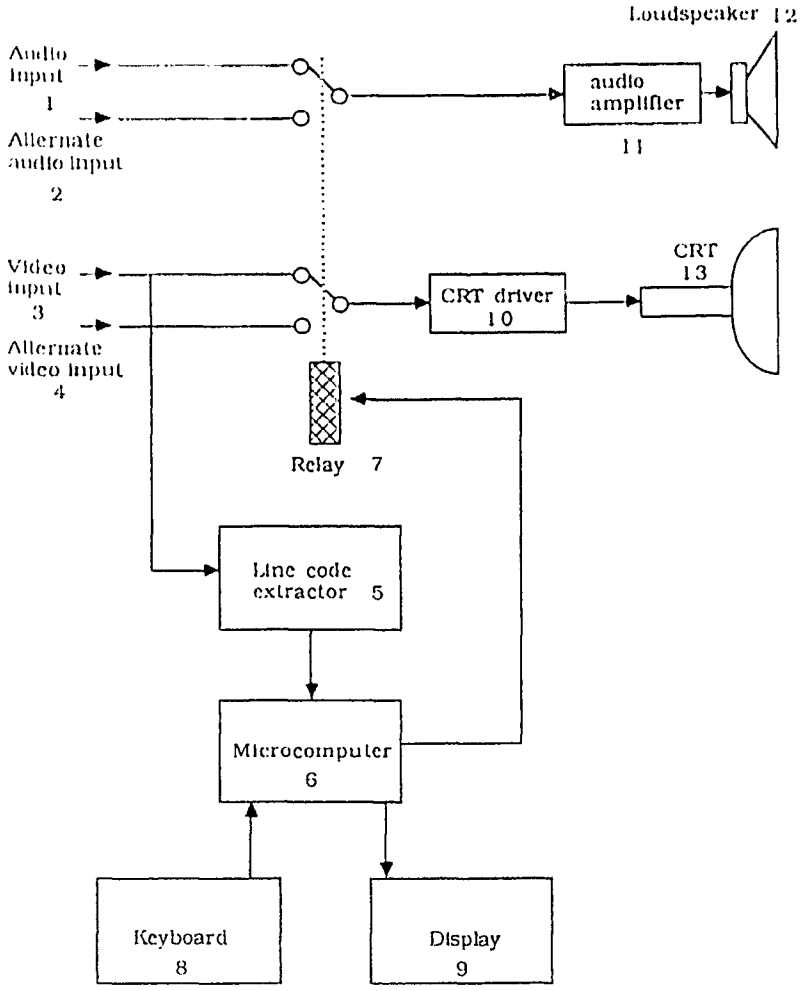
Loudspeaker 12
Audio Input 1
Alternate audio input 2
audio amplifier 11
Video input 3
Alternate video input 4
CRT driver 10
CRT 13
Relay 7
Line code extractor 5
Microcomputer 6
Keyboard 8
Display 9

Fig. 1

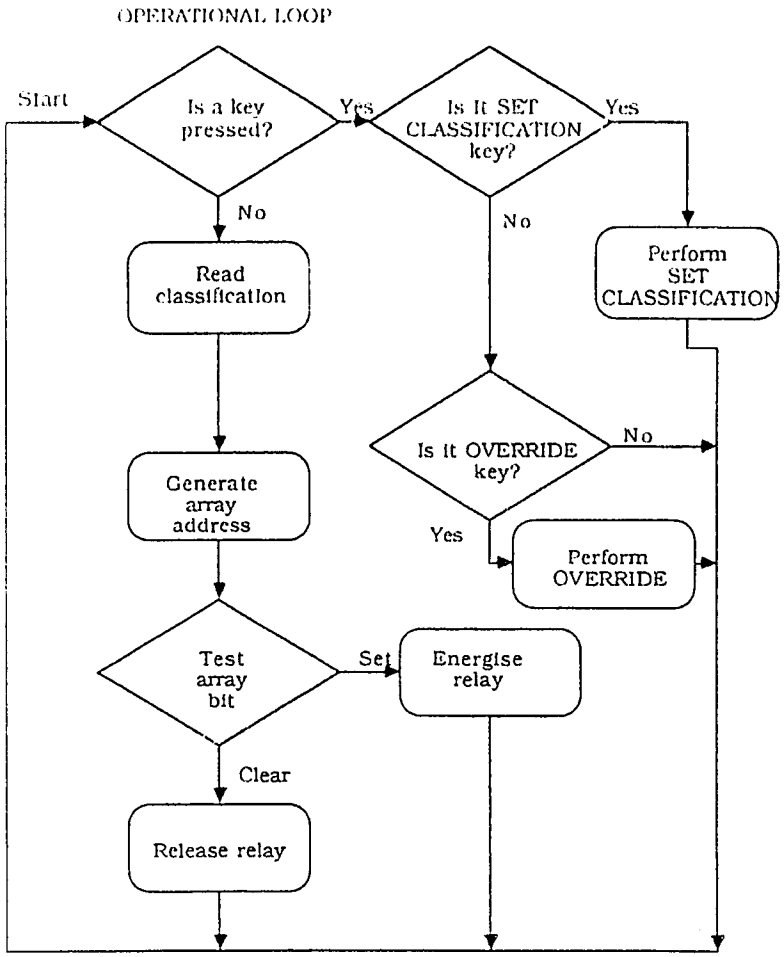
OPERATIONAL LOOP
Start
Is a key pressed?
Yes
Is It SET CLASSIFICATION key?
Yes
No
No
Read classification
Perform SET CLASSIFICATION
Is It OVERRIDE key?
No
Generate array address
Yes
Perform OVERRIDE
Test array bit
Set
Energise relay
Clear
Release relay

Fig. 2

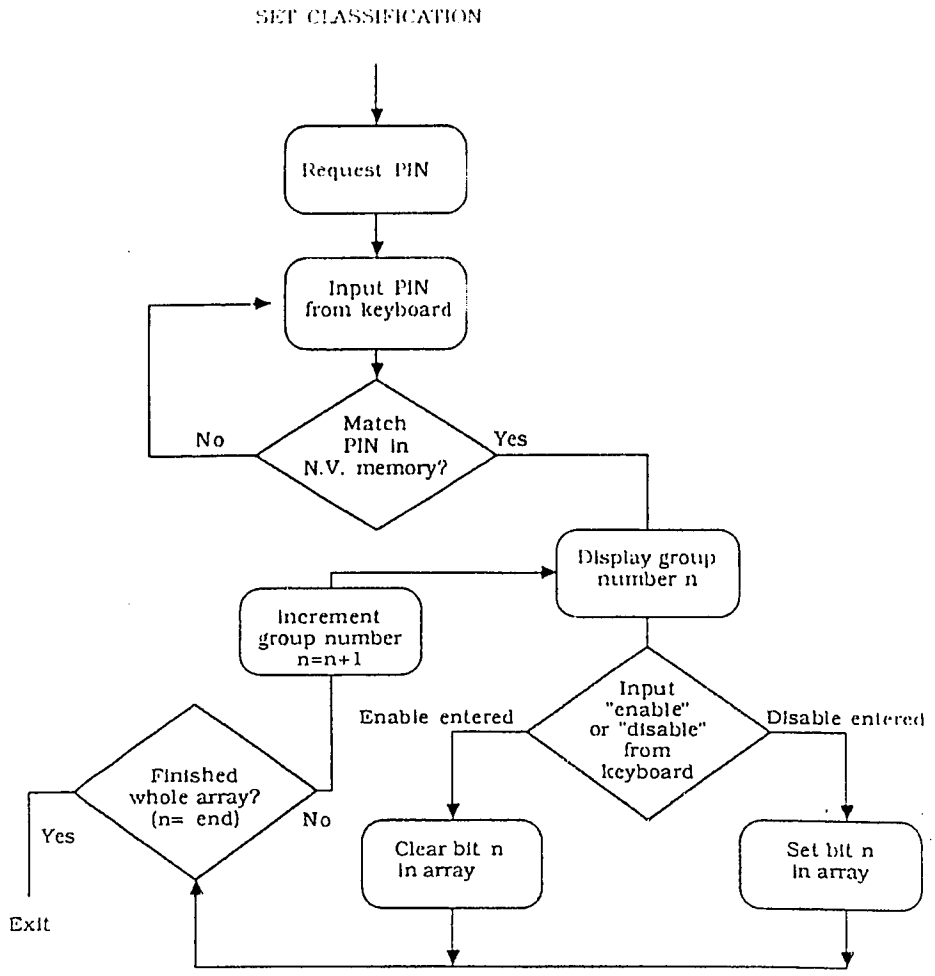
SET CLASSIFICATION
Request PIN
Input PIN from keyboard
Match PIN in N.V. memory?
No
Yes
Display group number n
Increment group number n=n+1
Input "enable" or "disable" from keyboard
Enable entered
Disable entered
Finished whole array? (n= end)
Yes
No
Exit
Clear bit n in array
Set bit n in array

Fig. 3

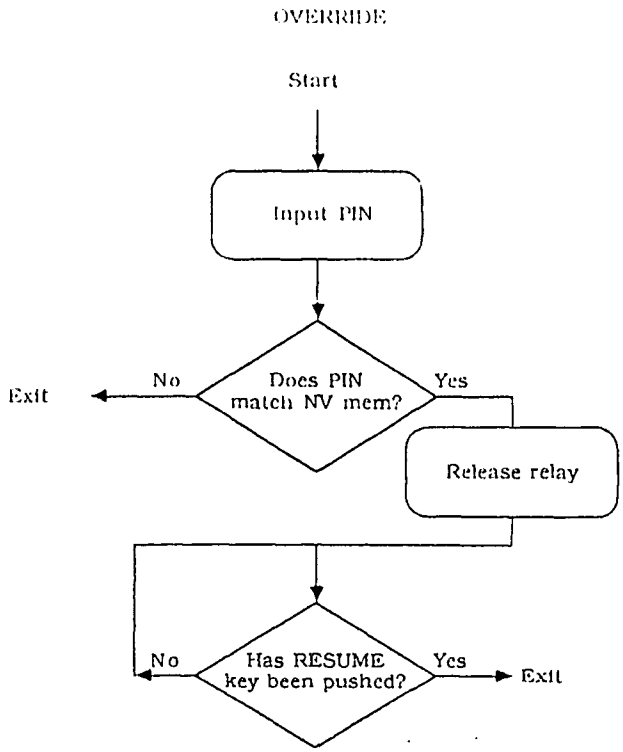
OVERRIDE
Start
Input PIN
Does PIN match NV mem?
No
Exit
Yes
Release relay
Has RESUME key been pushed?
No
Yes
Exit

Fig. 4

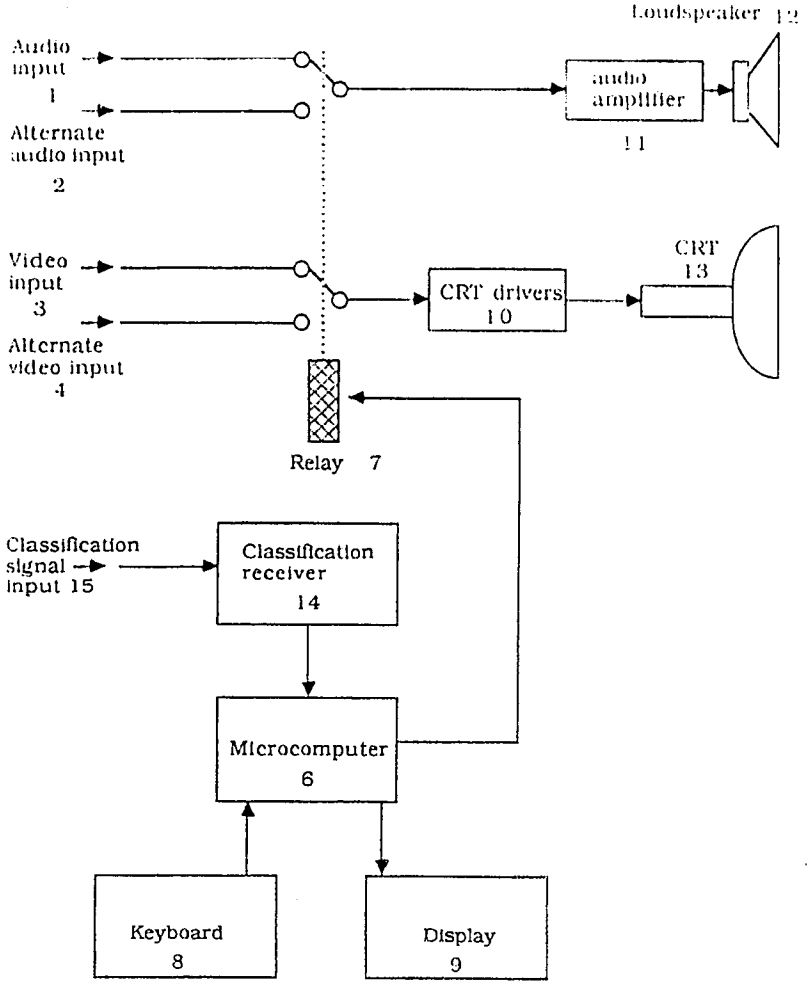
Loudspeaker 12
Audio input 1
Alternate audio input 2
audio amplifier 11
Video input 3
Alternate video input 4
CRT drivers 10
CRT 13
Relay 7
Classification signal input 15
Classification receiver 14
Microcomputer 6
Keyboard 8
Display 9

Fig. 5

AUTOMATIC CENSORSHIP OF VIDEO PROGRAMS

FIELD OF THE INVENTION

The present invention relates to methods of, and apparatus for, automatic censorship of video programs. The term video program used hereinafter refers to television programs broadcast free-to-air or by cable or by satellite, and other forms of mass distribution of video programs, including distribution by video tape or other media. The term also includes an accompanying audio signal if any.

BACKGROUND OF THE INVENTION

The need for censorship of video material is generally accepted by most societies, for the purposes of preventing the viewing of material by persons other than the target audience. Usually, such censorship takes the form of limiting access of a certain group of people, for example children, to a certain class of material, for example pornographic or violent movies. Other uses of censorship include voluntary self-censorship in cases where a recipient of a program does not wish to be exposed to certain types of program, for example scenes of great violence, advertisements which may be considered offensive, or non-program material which interrupts movies, drama or sports broadcasts.

Being the most widely accessible form of broadcasting, television is the medium with which the problem of censorship is experienced most. Traditionally, censorship of television takes the form of either preventing possibly offensive material from being broadcast in the first place, or voluntary self-censorship, that is, switching off the receiver when material which the viewer does not wish to experience is being broadcast. Another form of self-censorship, which has gained popularity since the introduction of remote controls for television sets is the phenomenon known as "zapping". Zapping involves eliminating unwanted material by muting the receiver or changing channels for the duration of the unwanted segment. While such self-censorship offers the benefit that all classes of material remain available to those who do not find them objectionable, it suffers from the inconvenience of having to anticipate the nature of broadcasts and operate the receiver appropriately. This process is tedious and error-prone, especially where the viewer wishes to suppress program material which changes rapidly in nature, for example when the viewer desires to suppress commercial messages within an otherwise unobjectionable program. Manual censorship is therefore not an entirely satisfactory solution.

It is therefore desirable to provide means whereby display of preselected classifications of program material can be automatically suppressed.

Arrangements for automatic censorship have been previously published, but suffer from a number of serious shortcomings. The main difficulty is that automatic means for discrimination of different program classifications, for example detection of television commercials, have been complex and unreliable. One technique has been to detect television commercials by the short period of black picture and silence separating them from other program material. A typical commercial-deleter of this type is described in U.S. Pat. No. 4,319,286. This system and others like it suffer from the problem that erroneous operation occurs if there is a brief period of black and silence in a broadcast at a time other than at the beginning of a commercial break, or if there is no separation between commercials and other program material. Furthermore, such systems are unable to distinguish between resumption of desired program and further commercials at the conclusion of a commercial. Resumption of viewing or recording must therefore be controlled by some form of timing device, based on assumptions regarding the length of commercial breaks. If these assumptions are not correct, the system will fail in its function.

A much improved censorship means is described in U.S. Pat. No. 4,520,404. This system relies on a human operator to classify broadcasts, based on observation at a monitoring station. A suitably coded message is distributed from the monitoring station to the viewer's home, at which point a suitably-equipped decoder controls the television receiver or video recorder in accordance with the classification data generated by the human operator at the monitoring station. Although this invention significantly improves upon the reliability of previous methods, it nevertheless suffers significant limitations. One limitation is the difficulty of accurately predicting at the monitoring station when a change of program is going to occur, making the system somewhat error prone. Another limitation is that when the system is used under the control of one party to control the viewing of another party, for example used by parents to limit viewing by children, it is necessary to provide control means by which the class of program to be censored can be selected, and it is therefore possible for the other party to use these controls to disable the censorship, thereby defeating the function of the system. Yet another limitation is that during the period that unwanted material is being censored, the receiver is simply disabled. The viewer is therefore periodically presented with a blank screen and/or silence, which may have the undesirable effect of causing alarm when program suddenly resumes, or may be mistaken for a receiver malfunction.

The prior art methods are also deficient in that they do not provide means whereby an authorized person can selectively disable viewing of certain classifications of pre-recorded video programs.

SUMMARY OF THE INVENTION

The present invention is directed to providing novel and improved means and method of receiving video programs whereby the censorship function is provided automatically, substantially resolving the abovementioned shortcomings of the prior art as well as providing other benefits.

According to a first aspect of the present invention, there is provided a video program receiving method capable of automatically censoring video programs comprising the steps of receiving a video program, with accompanying audio if any, receiving a classification signal indicative of the content of the program being received, decoding the classification signal and, according to functions selected by the user, causing the receiver to direct to its output alternative program material for the duration of program of selected classification.

According to a second aspect of this inventive concept, apparatus for receiving and automatically censoring video program is also provided, and comprises a video program receiver, a classification signal receiver, a controller equipped to decode said received signal and

to control switching means which, according to functions selected by the user at the receiving station, cause the receiver to direct to its output alternative program material for the duration of program of selected classification.

The term "receiver" used herein is defined in the broad sense of apparatus for converting television signals (and their associated sound signals) into visual and audible signals, or apparatus for converting modulated carrier signals into video and/or audio signals suitable for display by video monitors or audition via amplifiers and loudspeakers. For example, the term receiver includes off-air domestic television sets, as well as apparatus known commonly as a "video monitor". The term "receive" is used in the broad sense of accepting signal from any signal conveyance means, for example, from an antenna, cable, optical fiber, magnetic tape, or optical disk.

Some embodiments of this invention also include an arrangement for enabling access to selection of classifications to be censored only upon entering of a security code, or personal identification number (PIN), by the user.

BRIEF DESCRIPTION OF THE DRAWINGS

Some embodiments of the present invention will now be described, by way of example only, with reference to the drawings in which:

FIG. 1 is a schematic block diagram of a first embodiment of the invention in which the program classification is encoded into the vertical interval of the video signal;

FIG. 2 is a schematic diagram of the operational loop of the program executed by the microcomputer of the first embodiment;

FIG. 3 is a schematic diagram of the software used in either embodiment for setting classifications;

FIG. 4 is a schematic diagram of the software used in either embodiment for overriding the censorship function; and

FIG. 5 is a schematic block diagram of a second embodiment of the invention in which the program classification is received by the invention from a transmission source other than the program to be censored.

DETAILED DESCRIPTION

As seen in FIG. 1 this embodiment of the invention comprises the conventional components of a television receiver or monitor, including audio amplifier 11, loudspeaker 12, CRT driver 10 and CRT 13. Under normal conditions, the sources of video and audio are selected from video input 3 and audio input 1 respectively. However when the selector means, relay 7 is energized, alternate audio input 2 and alternate video input 4 are selected instead. Both sets of audio and video inputs may derive from any source, for example a television tuner or video tape player.

The operation of this embodiment relies on the presence of a program classification code within the video signal. This can be provided in a number of well known ways which ensure that the presence of such codes do not interfere with the normal operation of television receivers. The method used in this embodiment is encoding of a digital word in the form of black and white transitions located on line 16 of the video signal. This position is chosen so as to be invisible on the CRT display. The technology for this form of signalling is well known, being commonly used for data broadcasting services such as Teletext. The classification may be pre-recorded on tapes being broadcast or played locally, or inserted in a video signal prior to transmission at the broadcasting station at the time of broadcast. The means for inserting such signals is well known.

Upon arrival at video input 3 of the invention, as well as being fed to the display system, the video portion of the program is fed to line code extractor 5, which comprises means for isolating the desired line (in this embodiment line 16), extracting the digital word from that line, and presenting it as an output readable by microcomputer 6.

Microcomputer 6 is a self-contained "single chip computer" including RAM, ROM, IO ports, CPU and NV (non-volatile) memory. Of course, microcomputer 6 may also perform many other functions required by the receiver, as well as those of this invention. One of the output ports of microcomputer 6 controls relay 7. Other ports read data from keyboard 8 and send data to display 9.

Keyboard 8 is a press-button key array, which contains keys for control of all the usual television functions, as well as special keys used by this invention. The special keys include a SET CLASSIFICATION key, used for entering the classifications to be censored, an OVERRIDE key, used to disable the censorship function, and a RESUME key, used to resume censorship after OVERRIDE. The usual channel selection keys of the receiver of this embodiment serve the double purpose of allowing the user to enter a PIN (personal identity number). Similarly, the other keys can serve double functions if desired.

Display 9 is used to signal the user as required. In this embodiment it comprises an eight character liquid crystal display. In other embodiments other forms of display can be used, including single LEDs, or a video character generator which causes characters to be superimposed on the CRT display.

The censorship function of the invention is performed by the arrangement of FIG. 1 executing the program described schematically in FIG. 2.

Referring now to FIG. 2, the program starts by scanning the keyboard to test for a key depression. If no key is pressed, the classification code, arriving from line code extractor 5, is read, and an address is generated as a function of the code. A table is stored in the RAM of microcomputer 6, the address of each data bit of the table corresponding to a unique classification code, and the state of each bit so addressed indicating the classification status, namely ENABLED or DISABLED. A set bit indicates DISABLED, while a clear bit indicates ENABLED. Having generated an address from the received code, microcomputer 6 then applies this address to the table, and tests the corresponding data bit. If the bit is set, relay 7 is energized, causing the video and audio signals to be switched to the alternate sources. If the bit is clear, relay 7 is released, with the opposite effect. This procedure is repeated as a loop at high speed, so that the operation of relay 7 follows instantaneous changes in classification codes arriving at the video input of the invention.

In order to allow authorized users to select whether a given classification code is to be enabled or disabled, the program of FIG. 2 also continually scans the keyboard, testing for depression of the SET CLASSIFICATION key. If this key is pressed, the SET CLASSIFICATION routine is performed, according to FIG. 3.

Referring now to FIG. 3, when the SET CLASSIFICATION key has been pressed, microcomputer 6 first requests, via display 9, that the user enter the PIN. A number is then input, in this embodiment three digits being used for security, and compared to the PIN stored in the NV memory of microcomputer 6. If the number does not match, the request is repeated. If the number does match, the first classification group number is displayed, and the user is requested to enter enable or disable, using two designated keys of keyboard 8. If enable is entered, the first bit of the code array is cleared. If disable is entered, the bit is set. A test is then performed to see whether the last element of the array has been programmed. If it has, control is returned to the operational loop, if not, the next array element is addressed, and the input cycle repeated for the next classification code.

In this embodiment the array comprises three bits, corresponding to the classifications:

1. Advertisement (commercial product or service promotion)
2. Non-program material (includes advertisements, station identification, community service announcements, commentary during movies etc.)
3. Restricted. Programs deemed by the government censors to be unsuitable for viewing by children.

The coding scheme of this embodiment uses an eight bit word, so that up to 256 classifications can be supported. The 253 unused bits of the array are cleared, so that all classifications other than the three listed above are always enable. If desired, this range of classifications can be extended greatly, by increasing the size of the memory array.

When an authorized person, for example a parent, desires to watch a program of disabled classification, it may be inconvenient to re-define the classifications enabled. For convenience, this embodiment provides an override function, which is invoked by pressing the OVERRIDE key of keyboard 8. Depression of this key is detected by the test in the operational loop of FIG. 2, and results in the execution of the override routine of FIG. 4.

Referring to FIG. 4, on entry to the override routine, the PIN is requested from the user. If the PIN does not match the number stored in NV memory, the routine terminates. If the correct PIN has been entered, relay 7 is released, and the program continues looping until the RESUME key is pressed, with the result that no censoring action occurs until the RESUME key is pressed.

A second embodiment of the invention is shown in FIG. 5. This embodiment is similar to the first embodiment, except that classification codes are received from a source separate from the source of video program. In this case, classification receiver 14 is provided to receive classification signal input 15, which can arrive from any source, for example a radio transmitter distinct from the transmitter broadcasting the video program. This embodiment of the invention is not suited to operation with prerecorded tapes as program source. Operation of this embodiment is the same as the first embodiment, except that classification codes are read from classification receiver 14, rather than line code extractor 5, by microcomputer 6. The software executed by microcomputer 6 is also the same. The capabilities of both embodiments could easily be combined.

The foregoing describes only some embodiments of the present invention and modifications, obvious to those skilled in the art, can be made without departing from the scope of the present invention.

For example, in cases where a broadcast program is being viewed, more than one channel of broadcast is available, and the classification signal is being received from a source other than the broadcast being received, it is desirable that each classification code received be identified as relating to a particular channel, so that censorship can be based on which channel is being viewed or recorded. This feature is easily added to the embodiments described, especially in cases where the keyboard and microcomputer of the invention are also used to control the channel selection functions of the television receiver.

For the purpose of implementing the invention without needing to modify the television receiver, the invention can comprise a standard television receiver in combination with a special controller which controls operation of the receiver by means of the remote control interface of the television receiver, if the receiver is equipped with remote control. That is, the censorship controller is equipped with interface means compatible with the remote control communication standard, for example an infra-red transmitter, so muting, blanking, channel-changing, or other censorship actions can be effected using unmodified receiving equipment. The channel-change function can provide the facility of displaying alternative material during periods of censorship. For example, a suitable pattern generator tuned to an unused television channel could be used to provide "electronic wallpaper" during commercial breaks. In some applications it may be desirable to implement some functions of the invention, such as PIN entry, in the remote controller, and other functions, such as the censorship function, in the receiver.

Whereas the switching means of the embodiments described herein is a relay, any form of suitable switch, such as a solidstate arrangement, can be used.

The alternative material selected during censorship periods can originate from a remote source, for example another television broadcast, or locally, for example from a video disk or tape player. The local source may also be simply a black signal generator. Furthermore, the invention is not limited to providing only one alternative program source.

Whereas one embodiment of the invention described above relies upon signals encoded into the video portion of the received program, the invention can also be effectively implemented using signals embedded into the audio portion of the program, using any of the available well-known techniques which do not interfere with normal sound reception.

What I claim is:

1. A video program reception method comprising the steps of:
   - storing in memory means a set of codes descriptive of video program classifications,
   - receiving a video signal and associated audio signal if present,
   - receiving a program classification code descriptive of said video signal,
   - accessing said memory means and comparing the contents thereof with said code, and,
   - if the result of said comparison indicates that the received program is to be displayed, causing the received video signal to be selected for display,
   - if the result of said comparison indicates that an alternative video signal is to be displayed, causing an

alternative source of video signal to be selected for display; and

displaying the selected video signal on a video display means.

2. A video program reception method according to claim 1, wherein the alternative source of video signal originates from a remote transmitter.

3. A video program reception method according to claim 1, wherein the alternative source of video signal is local to the receiving station.

4. A video program reception method according to claim 1, comprising the further steps of:

inputting from the user a personal identity number,

comparing said number to a stored number, and if said numbers are equal,

permitting the user to alter the codes stored within said memory means.

5. A video program reception method according to claim 4, wherein the alternative source of video signal originates from a source remote to the receiver.

6. A video program reception method according to claim 4, wherein the alternative source of video signal is local to the receiving station.

7. A video program reception method according to claim 6, wherein the alternative source of video signal is a local video pattern generator equipped to generate at least a black pattern.

8. A video program reception method according to claim 4, wherein the program classification code is encoded into the video component of the program.

9. A video program reception method according to claim 4, wherein the program classification code is encoded into the audio component of the program.

10. A video program reception method according to claim 4, wherein the program classification code is not encoded into the program being received but is received from a separate source.

11. A video program reception method according to claim 1, wherein the program classification code is encoded into the video component of the program.

12. A video program reception method according to claim 1, wherein the program classification code is encoded into the audio component of the program.

13. A video program reception method according to claim 1, wherein the program classification code is not encoded into the program being received but is received from a separate source.

14. A video program receiver comprising:

a video signal receiver,

a program classification code receiver,

a program classification code memory,

means for accessing said memory and comparing the contents thereof with received codes,

selector means equipped to cause a received video signal to be selected for display if the result of said comparison indicates that the received program is to be displayed and to cause an alternative source of video signal to be selected for display if the result of said comparison indicates that an alternative video signal is to be displayed, and

means for displaying the selected video signal.

15. A video program receiver according to claim 14, wherein the alternative source of video signal originates from a remote transmitter.

16. A video program receiver according to claim 14, wherein the alternative source of video signal is local to the receiving station.

17. A video program receiver according to claim 14, further comprising:

means for inputting from the user a personal identity number,

means for comparing said number to a stored number, and control means permitting the user to alter the contents of said memory only if the compared numbers are equal.

18. A video program receiver according to claim 17, wherein the alternative source of video signal originates from a source remote to the receiver.

19. A video program receiver according to claim 17, wherein the alternative source of video signal is local to the receiving station.

20. A video program receiver according to claim 19, wherein the alternative source of video signal is a local video pattern generator equipped to generate at least a black pattern.

21. A video program receiver according to claim 17, including means for deriving the program classification code from the video component of the program.

22. A video program receiver according to claim 17, including means for deriving the program classification code from the audio component of the program.

23. A video program receiver according to claim 17, including means for receiving program classification code from a source other than the program being received.

24. A video program receiver according to claim 14, including means for deriving the program classification code from the video component of the program.

25. A video program receiver according to claim 14, including means for deriving the program classification code from the audio component of the program.

26. A video program receiver according to claim 14, including means for receiving program classification code from a source other than the program being received.

* * * * *

EXHIBIT B

US004930160C1

(12) EX PARTE REEXAMINATION CERTIFICATE (6744th)

United States Patent

Vogel

(10) Number: US 4,930,160 C1

(45) Certificate Issued: Apr. 7, 2009

(54) **AUTOMATIC CENSORSHIP OF VIDEO PROGRAMS**

(75) Inventor: **Peter S. Vogel**, Faulconbridge (AU)

(73) Assignee: **Guardian Media Technologies Ltd.**, La Jolla, CA (US)

Reexamination Request:
No. 90/007,733, Sep. 26, 2005
No. 90/008,243, Sep. 29, 2006

Reexamination Certificate for:
Patent No.: 4,930,160
Issued: May 29, 1990
Appl. No.: 07/237,176
Filed: Aug. 29, 1988

(30) **Foreign Application Priority Data**

Sep. 2, 1987 (AU) PI4107

(51) **Int. Cl.**
G11B 27/10 (2006.01)
H04N 7/16 (2006.01)

(52) **U.S. Cl.** 725/30; 340/5.74; 348/E7.06; 380/241; 725/142; 725/20; 725/28; 725/34

(58) **Field of Classification Search** 348/632 634
See application file for complete search history.

(56) **References Cited**

U.S. PATENT DOCUMENTS

3,673,318	A		6/1972	Olsen	178/5.8 R
3,859,457	A		1/1975	Kirk	178/5.1
3,919,462	A		11/1975	Hartong	178/5.1
3,919,479	A		11/1975	Moon	179/1
4,068,264	A	*	1/1978	Pires	380/233
4,114,139	A		9/1978	Boyd	340/147
4,215,366	A		7/1980	Davidson	358/124
4,225,884	A		9/1980	Block	358/122
4,229,765	A		10/1980	Sanger	358/188
4,245,245	A		1/1981	Matsumoto	358/122
4,266,098	A		5/1981	Novak	179/5.5
4,280,139	A		7/1981	Mogi	358/165
4,325,078	A		4/1982	Seaton	358/117
4,331,974	A		5/1982	Cogswell	358/86
4,333,110	A		6/1982	Laeiber	358/165
4,338,628	A		7/1982	Payne	358/120
4,348,696	A		9/1982	Beier	358/188
4,354,201	A		10/1982	Sechet	358/122
4,375,651	A		3/1983	Templin	358/191.1
4,386,436	A		5/1983	Kocher	455/154
4,398,193	A		8/1983	Kamyoshi	340/825.76
4,425,579	A		1/1984	Merrell	358/86
4,484,217	A	*	11/1984	Block et al.	725/1
4,488,179	A		12/1984	Krüger	358/181

(Continued)

FOREIGN PATENT DOCUMENTS

AU	536261	B	5/1982
AU	80145/82		10/1982
AU	56757/86		11/1986
EP	A-0053885		6/1982
EP	0112575	A1	12/1983
EP	0112575	B1	3/1986
GB	1424739	A	2/1976
GB	8138341		6/1983
GB	2206759	A	1/1989
GB	2206759	B	1/1992
JP	59-120782		11/1984

OTHER PUBLICATIONS

Rae Atkey, "How You Can Censor Your Child's TV Viewing," The News Editorial (Adelaide) Aug. 25, 1986.

Primary Examiner- Ovidio Escalante

(57) **ABSTRACT**

A video program is received from a broadcast or video recording and displayed for viewing. On receipt of a prescribed classification code or group of codes display is switched to an alternative source. The classification code can be encoded into the broadcast or tape being viewed, or can originate from a separate source. The alternative material displayed can be another broadcast, a local recording, a locally-generated pattern, or other material. The codes which cause the display to be switched to the alternative source can be set by the user after entering a personal identity number.

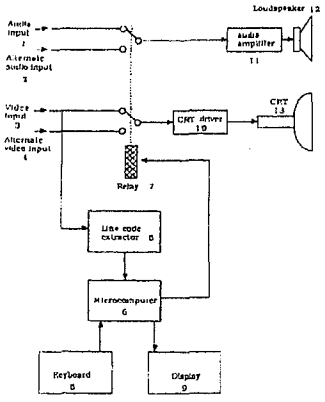

U.S. PATENT DOCUMENTS

4,540,624	A		4 1985	Bonneau	455 181
4,570,404	A		5 1985	Von Kohorn	358 355
4,528,588	A		7 1985	Loffberg	358 122
4,528,589	A	*	7 1985	Block et al.	380 241
4,530,008	A		7 1985	McVoy	358 123
4,536,791	A		8 1985	Campbell	358 122
4,554,584	A		11 1985	Elum et al.	358 165
4,588,857	A		5 1986	Arsem	179 6.06
4,591,664	A		5 1986	Freeman	179 6.06
4,595,950	A		6 1986	Loffberg	358 122
4,598,288	A		7 1986	Yarbrough	340 825.34
4,599,647	A		7 1986	George	358 122
4,600,921	A		7 1986	Thomas	340 825.31
4,602,297	A		7 1986	Reese	360 14.1
4,608,964	A		8 1986	Chard	358 147
4,605,973	A		8 1986	Von Kohorn	358 335
4,620,229	A		10 1986	Amano	380 23
4,633,297	A		12 1986	Skerlos et al.	
4,670,857	A		6 1987	Rackman	380 4
4,685,131	A		8 1987	Horne	380 20
4,695,904	A		9 1987	Shinyagaito	358 342
4,696,034	A		9 1987	Wiedemer	380 16
4,718,107	A		1 1988	Hayes	455 4
4,729,044	A		3 1988	Kiesel	360 14.3
4,750,213	A		6 1988	Novak	455 67
4,768,229	A		8 1988	Benjamin et al.	
4,787,063	A		11 1988	Muguet	364 900
4,814,883	A		3 1989	Perine	358 181
4,837,623	A	*	6 1989	Motoyama	348 633
4,888,796	A		12 1989	Olivo, Jr.	379 101
4,896,354	A		1 1990	Inagaki et al.	
4,939,596	A		7 1990	Takayama	360 27

* cited by examiner

EX PARTE
REEXAMINATION CERTIFICATE
ISSUED UNDER 35 U.S.C. 307

THE PATENT IS HEREBY AMENDED AS INDICATED BELOW.

AS A RESULT OF REEXAMINATION, IT HAS BEEN DETERMINED THAT:

The patentability of claims 3, 6, 7, 16, 19 and 20 is confirmed.

Claims 1, 2, 4, 5, 8, 15, 17, 18 and 21-26 are cancelled.

* * * * *

UNITED STATES DISTRICT COURT
CENTRAL DISTRICT OF CALIFORNIA

NOTICE OF ASSIGNMENT TO UNITED STATES JUDGES

This case has been assigned to District Judge Dean D. Pregerson and the assigned Magistrate Judge is Ralph Zarefsky .

The case number on all documents filed with the Court should read as follows:

14-CV-00757 DDP-RZx

Pursuant to General Order 05-07 of the United States District Court for the Central District of California, the Magistrate Judge has been designated to hear discovery related motions.

All discovery related motions should be noticed on the calendar of the Magistrate Judge.

Clerk, U. S. District Court

January 31, 2014
Date

By SBOURGEOIS
Deputy Clerk

NOTICE TO COUNSEL

A copy of this notice must be served with the summons and complaint on all defendants (if a removal action is filed, a copy of this notice must be served on all plaintiffs).

Subsequent documents must be filed at the following location:

☒ Western Division
312 N. Spring Street, G-8
Los Angeles, CA 90012

☐ Southern Division
411 West Fourth St., Ste 1053
Santa Ana, CA 92701

☐ Eastern Division
3470 Twelfth Street, Room 134
Riverside, CA 92501

Failure to file at the proper location will result in your documents being returned to you.

ORIGINAL

AO 440 (Rev. 06/12) Summons in a Civil Action

UNITED STATES DISTRICT COURT

for the

Central District of California

Guardian Media Technologies, Ltd.

Plaintiff(s)

v.

Overstock.com, Inc

Defendant(s)

Civil Action No. CV14-0757 DDP-RZx

SUMMONS IN A CIVIL ACTION

To: *(Defendant's name and address)* Overstock.com, Inc , 6350 South 3000 East; Salt Lake City, UT

A lawsuit has been filed against you.

Within 21 days after service of this summons on you (not counting the day you received it) — or 60 days if you are the United States or a United States agency, or an officer or employee of the United States described in Fed. R. Civ. P. 12 (a)(2) or (3) — you must serve on the plaintiff an answer to the attached complaint or a motion under Rule 12 of the Federal Rules of Civil Procedure. The answer or motion must be served on the plaintiff or plaintiff's attorney, whose name and address are:

Daniel S. Agle, Esq.;
Klinedinst PC
777 S. Fugueroa St., Suite 2800
Los Angeles, CA 90017
213-406-1100

If you fail to respond, judgment by default will be entered against you for the relief demanded in the complaint. You also must file your answer or motion with the court.

CLERK OF COURT

Date: JAN 31 2014

Signature of Clerk or Deputy Clerk

1184

Civil Action No.

PROOF OF SERVICE

(This section should not be filed with the court unless required by Fed. R. Civ. P. 4 (l))

This summons for *(name of individual and title, if any)*

was received by me on *(date)* .

☐ I personally served the summons on the individual at *(place)*

on *(date)* ; or

☐ I left the summons at the individual's residence or usual place of abode with *(name)*

, a person of suitable age and discretion who resides there,

on *(date)* , and mailed a copy to the individual's last known address; or

☐ I served the summons on *(name of individual)* , who is

designated by law to accept service of process on behalf of *(name of organization)*

on *(date)* ; or

☐ I returned the summons unexecuted because ; or

☐ Other *(specify)*

My fees are $ for travel and $ for services, for a total of $ 0.00 .

I declare under penalty of perjury that this information is true.

Date:

Server's signature

Printed name and title

Server's address

Additional information regarding attempted service, etc:

COPY

UNITED STATES DISTRICT COURT, CENTRAL DISTRICT OF CALIFORNIA
CIVIL COVER SHEET

I. (a) PLAINTIFFS (Check box if you are representing yourself [ ])

Guardian Media Technologies, Ltd.

DEFENDANTS (Check box if you are representing yourself [ ])

Overstock.com, Inc.

(b) County of Residence of First Listed Plaintiff Longview, TX
(EXCEPT IN U.S. PLAINTIFF CASES)

County of Residence of First Listed Defendant Salt Lake City, UT
(IN U.S. PLAINTIFF CASES ONLY)

(c) Attorneys (Firm Name, Address and Telephone Number) If you are representing yourself, provide the same information.

Daniel S. Agle, Esq., Kinedinst PC, 777 S. Figueroa St., Ste. 2800, Los Angeles, CA 90017, 213 406 1100

Attorneys (Firm Name, Address and Telephone Number) If you are representing yourself, provide the same information.

II. BASIS OF JURISDICTION (Place an X in one box only.)

- [ ] 1. U.S. Government Plaintiff
- [x] 3. Federal Question (U.S. Government Not a Party)
- [ ] 2. U.S. Government Defendant
- [ ] 4. Diversity (Indicate Citizenship of Parties in Item III)

III. CITIZENSHIP OF PRINCIPAL PARTIES - For Diversity Cases Only
(Place an X in one box for plaintiff and one for defendant)

	PTF	DEF		PTF	DEF
Citizen of This State	[ ] 1	[ ] 1	Incorporated or Principal Place of Business in this State	[ ] 4	[ ] 4
Citizen of Another State	[ ] 2	[ ] 2	Incorporated and Principal Place of Business in Another State	[ ] 5	[ ] 5
Citizen or Subject of a Foreign Country	[ ] 3	[ ] 3	Foreign Nation	[ ] 6	[ ] 6

IV. ORIGIN (Place an X in one box only.)

[x] 1. Original Proceeding [ ] 2. Removed from State Court [ ] 3. Remanded from Appellate Court [ ] 4. Reinstated or Reopened [ ] 5. Transferred from Another District (Specify) [ ] 6. Multi District Litigation

V. REQUESTED IN COMPLAINT: JURY DEMAND: [x] Yes [ ] No (Check "Yes" only if demanded in complaint.)

CLASS ACTION under F.R.Cv.P. 23: [ ] Yes [x] No [ ] **MONEY DEMANDED IN COMPLAINT:** $

VI. CAUSE OF ACTION (Cite the U.S. Civil Statute under which you are filing and write a brief statement of cause. Do not cite jurisdictional statutes unless diversity.)

35 U.S.C. §§271, 281 and 284-285 - Patent Infringement

VII. NATURE OF SUIT (Place an X in one box only).

OTHER STATUTES
- [ ] 375 False Claims Act
- [ ] 400 State Reapportionment
- [ ] 410 Antitrust
- [ ] 430 Banks and Banking
- [ ] 450 Commerce/ICC Rates/Etc.
- [ ] 460 Deportation
- [ ] 470 Racketeer Influenced & Corrupt Org.
- [ ] 480 Consumer Credit
- [ ] 490 Cable/Sat TV
- [ ] 850 Securities/Commodities/Exchange
- [ ] 890 Other Statutory Actions
- [ ] 891 Agricultural Acts
- [ ] 893 Environmental Matters
- [ ] 895 Freedom of Info. Act
- [ ] 896 Arbitration
- [ ] 899 Admin. Procedures Act/Review of Appeal of Agency Decision
- [ ] 950 Constitutionality of State Statutes

CONTRACT
- [ ] 110 Insurance
- [ ] 120 Marine
- [ ] 130 Miller Act
- [ ] 140 Negotiable Instrument
- [ ] 150 Recovery of Overpayment & Enforcement of Judgment
- [ ] 151 Medicare Act
- [ ] 152 Recovery of Defaulted Student Loan (Excl. Vet.)
- [ ] 153 Recovery of Overpayment of Vet. Benefits
- [ ] 160 Stockholders' Suits
- [ ] 190 Other Contract
- [ ] 195 Contract Product Liability
- [ ] 196 Franchise

REAL PROPERTY
- [ ] 210 Land Condemnation
- [ ] 220 Foreclosure
- [ ] 230 Rent Lease & Ejectment

REAL PROPERTY CONT.
- [ ] 240 Torts to Land
- [ ] 245 Tort Product Liability
- [ ] 290 All Other Real Property

TORTS PERSONAL INJURY
- [ ] 310 Airplane
- [ ] 315 Airplane Product Liability
- [ ] 320 Assault, Libel & Slander
- [ ] 330 Fed. Employers' Liability
- [ ] 340 Marine
- [ ] 345 Marine Product Liability
- [ ] 350 Motor Vehicle
- [ ] 355 Motor Vehicle Product Liability
- [ ] 360 Other Personal Injury
- [ ] 362 Personal Injury-Med Malpratice
- [ ] 365 Personal Injury-Product Liability
- [ ] 367 Health Care/ Pharmaceutical Personal Injury Product Liability
- [ ] 368 Asbestos Personal Injury Product Liability

IMMIGRATION
- [ ] 462 Naturalization Application
- [ ] 465 Other Immigration Actions

TORTS PERSONAL PROPERTY
- [ ] 370 Other Fraud
- [ ] 371 Truth in Lending
- [ ] 380 Other Personal Property Damage
- [ ] 385 Property Damage Product Liability

BANKRUPTCY
- [ ] 422 Appeal 28 USC 158
- [ ] 423 Withdrawal 28 USC 157

CIVIL RIGHTS
- [ ] 440 Other Civil Rights
- [ ] 441 Voting
- [ ] 442 Employment
- [ ] 443 Housing/ Accommodations
- [ ] 445 American with Disabilities-Employment
- [ ] 446 American with Disabilities-Other
- [ ] 448 Education

PRISONER PETITIONS

Habeas Corpus:
- [ ] 463 Alien Detainee
- [ ] 510 Motions to Vacate Sentence
- [ ] 530 General
- [ ] 535 Death Penalty

Other:
- [ ] 540 Mandamus/Other
- [ ] 550 Civil Rights
- [ ] 555 Prison Condition
- [ ] 560 Civil Detainee Conditions of Confinement

FORFEITURE/PENALTY
- [ ] 625 Drug Related Seizure of Property 21 USC 881
- [ ] 690 Other

LABOR
- [ ] 710 Fair Labor Standards Act
- [ ] 720 Labor/Mgmt. Relations
- [ ] 740 Railway Labor Act
- [ ] 751 Family and Medical Leave Act
- [ ] 790 Other Labor Litigation
- [ ] 791 Employee Ret. Inc. Security Act

PROPERTY RIGHTS
- [ ] 820 Copyrights
- [x] 830 Patent
- [ ] 840 Trademark

SOCIAL SECURITY
- [ ] 861 HIA (1395ff)
- [ ] 862 Black Lung (923)
- [ ] 863 DIWC/DIWW (405 (g))
- [ ] 864 SSID Title XVI
- [ ] 865 RSI (405 (g))

FEDERAL TAX SUITS
- [ ] 870 Taxes (U.S. Plaintiff or Defendant)
- [ ] 871 IRS-Third Party 26 USC 7609

FOR OFFICE USE ONLY: Case Number: CV14-0757

UNITED STATES DISTRICT COURT, CENTRAL DISTRICT OF CALIFORNIA
CIVIL COVER SHEET

VIII. VENUE: Your answers to the questions below will determine the division of the Court to which this case will most likely be initially assigned. This initial assignment is subject to change, in accordance with the Court's General Orders, upon review by the Court of your Complaint or Notice of Removal.

Question A: Was this case removed from state court?	STATE CASE WAS PENDING IN THE COUNTY OF:	INITIAL DIVISION IN CACD IS:
[ ] Yes [x] No	[ ] Los Angeles	Western
If "no," go to Question B. If "yes," check the box to the right that applies, enter the corresponding division in response to Question D, below, and skip to Section IX.	[ ] Ventura, Santa Barbara, or San Luis Obispo	Western
	[ ] Orange	Southern
	[ ] Riverside or San Bernardino	Eastern

Question B: Is the United States, or one of its agencies or employees, a party to this action?	If the United States, or one of its agencies or employees, is a party, is it:		INITIAL DIVISION IN CACD IS:
	A PLAINTIFF? Then check the box below for the county in which the majority of DEFENDANTS reside.	A DEFENDANT? Then check the box below for the county in which the majority of PLAINTIFFS reside.	
[ ] Yes [x] No			
If "no," go to Question C. If "yes," check the box to the right that applies, enter the corresponding division in response to Question D, below, and skip to Section IX.	[ ] Los Angeles	[ ] Los Angeles	Western
	[ ] Ventura, Santa Barbara, or San Luis Obispo	[ ] Ventura, Santa Barbara, or San Luis Obispo	Western
	[ ] Orange	[ ] Orange	Southern
	[ ] Riverside or San Bernardino	[ ] Riverside or San Bernardino	Eastern
	[ ] Other	[ ] Other	Western

Question C: Location of plaintiffs, defendants, and claims? (Make only one selection per row)	A. Los Angeles County	B. Ventura, Santa Barbara, or San Luis Obispo Counties	C. Orange County	D. Riverside or San Bernardino Counties	E. Outside the Central District of California	F. Other
Indicate the location in which a majority of plaintiffs reside:	[ ]	[ ]	[ ]	[ ]	[x]	[ ]
Indicate the location in which a majority of defendants reside:	[ ]	[ ]	[ ]	[ ]	[x]	[ ]
Indicate the location in which a majority of claims arose:	[x]	[ ]	[ ]	[ ]	[ ]	[ ]

C.1. Is either of the following true? If so, check the one that applies:

[ ] 2 or more answers in Column C

[ ] only 1 answer in Column C and no answers in Column D

Your case will initially be assigned to the SOUTHERN DIVISION.
Enter "Southern" in response to Question D, below.

If none applies, answer question C2 to the right. →

C.2. Is either of the following true? If so, check the one that applies:

[ ] 2 or more answers in Column D

[ ] only 1 answer in Column D and no answers in Column C

Your case will initially be assigned to the EASTERN DIVISION.
Enter "Eastern" in response to Question D, below.

If none applies, go to the box below. ↓

Your case will initially be assigned to the WESTERN DIVISION.
Enter "Western" in response to Question D below.

Question D: Initial Division?	INITIAL DIVISION IN CACD
Enter the initial division determined by Question A, B, or C above: →	Western

UNITED STATES DISTRICT COURT, CENTRAL DISTRICT OF CALIFORNIA
CIVIL COVER SHEET

IX(a). IDENTICAL CASES: Has this action been previously filed **in this court** and dismissed, remanded or closed? NO [x] YES

If yes, list case number(s): 2:13-CV-08369 PSG (PLAx)

IX(b). RELATED CASES: Have any cases been previously filed **in this court** that are related to the present case? NO [x] YES

If yes, list case number(s): 2:13-CV-08369 as well as the cases listed in the notice of related cases filed in that action

Civil cases are deemed related if a previously filed case and the present case:

(Check all boxes that apply)

[x] A. Arise from the same or closely related transactions, happenings, or events; or

[x] B. Call for determination of the same or substantially related or similar questions of law and fact; or

[x] C. For other reasons would entail substantial duplication of labor if heard by different judges; or

[x] D. Involve the same patent, trademark or copyright, and one of the factors identified above in a, b or c also is present.

X. SIGNATURE OF ATTORNEY (OR SELF-REPRESENTED LITIGANT): DATE: January 30, 2014

Notice to Counsel/Parties: The CV-71 (JS-44) Civil Cover Sheet and the information contained herein neither replace nor supplement the filing and service of pleadings or other papers as required by law. This form, approved by the Judicial Conference of the United States in September 1974, is required pursuant to Local Rule 3-1 is not filed but is used by the Clerk of the Court for the purpose of statistics, venue and initiating the civil docket sheet. (For more detailed instructions, see separate instructions sheet).

Key to Statistical codes relating to Social Security Cases:

Nature of Suit Code	Abbreviation	Substantive Statement of Cause of Action
861	HIA	All claims for health insurance benefits (Medicare) under Title 18, Part A, of the Social Security Act, as amended. Also, include claims by hospitals, skilled nursing facilities, etc., for certification as providers of services under the program. (42 U.S.C. 1935FF(b))
862	BL	All claims for "Black Lung" benefits under Title 4, Part B, of the Federal Coal Mine Health and Safety Act of 1969. (30 U.S.C. 923)
863	DIWC	All claims filed by insured workers for disability insurance benefits under Title 2 of the Social Security Act, as amended; plus all claims filed for child's insurance benefits based on disability. (42 U.S.C. 405 (g))
863	DIWW	All claims filed for widows or widowers insurance benefits based on disability under Title 2 of the Social Security Act, as amended. (42 U.S.C. 405 (g))
864	SSID	All claims for supplemental security income payments based upon disability filed under Title 16 of the Social Security Act, as amended.
865	RSI	All claims for retirement (old age) and survivors benefits under Title 2 of the Social Security Act, as amended. (42 U.S.C. 405 (g))