ATTACHMENT 4

Trials@uspto.gov
571-272-7822

Paper 18
Entered: April 27, 2015

UNITED STATES PATENT AND TRADEMARK OFFICE

BEFORE THE PATENT TRIAL AND APPEAL BOARD

HUGHES NETWORK SYSTEMS, LLC and
HUGHES COMMUNICATIONS, INC.,
Petitioner,

v.

CALIFORNIA INSTITUTE OF TECHNOLOGY,
Patent Owner.

Case IPR2015-00067
Patent 7,116,710 B1

Before KALYAN K. DESHPANDE, GLENN J. PERRY, and TREVOR M. JEFFERSON, *Administrative Patent Judges*.

JEFFERSON, *Administrative Patent Judge*.

DECISION
Denying Institution of *Inter Partes* Review
37 C.F.R. § 42.108

I. INTRODUCTION

Hughes Network Systems, LLC and Hughes Communications, Inc. (collectively, "Petitioner") filed a Corrected Petition requesting an *inter partes* review of claims 1, 3, 4, 5, 6, 15, 16, 20, 21, and 22 of U.S. Patent No. 7,116,710 B1 (Ex. 1001, "the '710 patent"). Paper 4 ("Pet."). California Institute of Technology ("Patent Owner") timely filed a Preliminary Response. Paper 13 ("Prelim. Resp."). We have jurisdiction under 35 U.S.C. § 314(a), which provides that an *inter partes* review may not be instituted "unless . . . there is a reasonable likelihood that the petitioner would prevail with respect to at least 1 of the claims challenged in the petition." After considering the Petition, the Preliminary Response, and associated evidence, we conclude that Petitioner has not demonstrated a reasonable likelihood that it would prevail in showing unpatentability of all the challenged claims. Thus, we deny institution of an *inter partes* review of claims 1, 3, 4, 5, 6, 15, 16, 20, 21, and 22 of the '710 patent.

A. Related Proceedings

Petitioner indicates that the '710 patent is the subject of the proceedings in *California Institute of Technology v. Hughes Communications, Inc.*, No. 13-cv-07245 (C.D. Cal.). Pet. 1–2.

The '710 patent is also the subject of IPR2015-00068. Additionally, Petitioner indicates that the '710 patent is related to U.S. Patent No. 7,421,032, U.S. Patent No. 7,916,781, and U.S. Patent No. 8,284,833, which are the subject of IPR2015-00059, IPR2015-00060, IPR2015-00061, and IPR2015-00081. Paper 7, 1–2.

B. The '710 Patent

The '710 patent describes the serial concatenation of interleaved convolutional codes forming turbo-like codes. Ex. 1001, Title. It explains some of the prior art with reference to its Fig. 1, reproduced below.

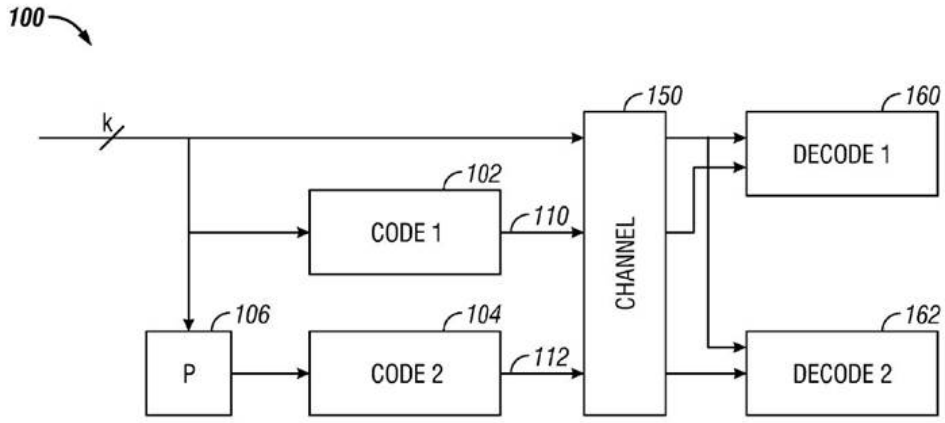

FIG. 1
(Prior Art)

Figure 1 is a schematic diagram of a prior "turbo code" system. *Id.* at 2:14–15. The '710 patent specification describes Figure 1 as follows:

> A standard turbo coder 100 is shown in FIG. 1. A block of k information bits is input directly to a first coder 102. A k bit interleaver 106 also receives the k bits and interleaves them prior to applying them to a second coder 104. The second coder produces an output that has more bits than its input, that is, it is a coder with rate that is less than 1. The coders 102,104 are typically recursive convolutional coders.
>
> Three different items are sent over the channel 150: the original k bits, first encoded bits 110, and second encoded bits 112. At the decoding end, two decoders are used: a first constituent decoder 160 and a second constituent decoder 162. Each receives both the original k bits, and one of the encoded portions 110, 112. Each decoder sends likelihood estimates of the decoded bits to the other decoders. The estimates are used to decode the uncoded information bits as corrupted by the noisy channel.

Id. at 1:38–53(emphasis omitted).

A coder 200, according to a first embodiment of the invention, is described with respect to Figure 2, reproduced below.

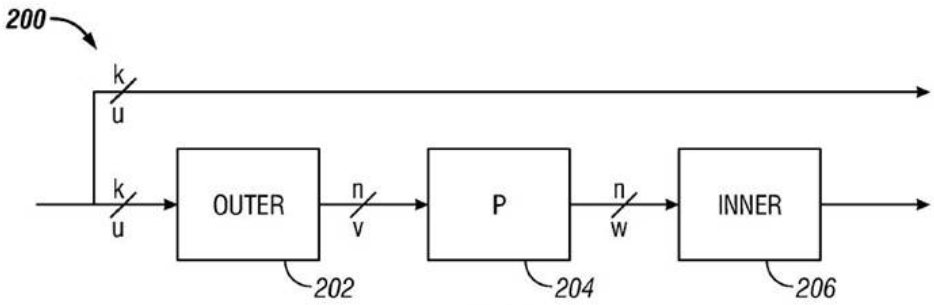

FIG. 2

Figure 2 of the '710 patent is a schematic diagram of coder 200. *Id*. at2:16–17.

The specification states that "coder 200 may include an outer coder 202, an interleaver 204, and inner coder 206." *Id*. at 2:34–35. It further states as follows.

> The outer coder 202 receives uncoded data. The data may be partitioned into blocks of fixed size, say k bits. The outer coder may be an (n,k) binary linear block coder, where n>k. The coder accepts as input a block u of k data bits and produces an output block v of n data bits. The mathematical relationship between u and v is $v=T_0u$, where T_0 is an n x k matrix, and the rate[1] of the coder is k/n.
>
> The rate of the coder may be irregular, that is, the value of T_0 is not constant, and may differ for sub-blocks of bits in the data block. In an embodiment, the outer coder 202 is a repeater that repeats the k bits in a block a number of times q to produce a block with n bits, where n=qk. Since the repeater has an irregular output, different bits in the block may be repeated a

[1] The "rate" of an encoder refers to the ratio of the number of input bits to the number of resulting encoded output bits related to those input bits. *See* Ex. 1010 ¶ 19.

> different number of times. For example, a fraction of the bits in the block may be repeated two times, a fraction of bits may be repeated three times, and the remainder of bits may be repeated four times. These fractions define a degree sequence, or degree profile, of the code.
>
> The inner coder 206 may be a linear rate-1 coder, which means that then-bit output block x can be written as $x=T_I w$, where T_I is a nonsingular n x n matrix. The inner coder 210 can have a rate that is close to 1, e.g., within 50%, more preferably 10% and perhaps even more preferably within 1% of 1.

Id. at 2:41–64 (emphasis omitted and footnote added). Codes characterized by a regular repeat of message bits into a resulting codeword are referred to as "regular repeat," whereas codes characterized by irregular repeat of message bits into a resulting codeword are referred to as "irregular repeat." The second ("inner") encoder 206 performs an "accumulate" function. Thus, the two step encoding process illustrated in Fig. 2, including a first encoding ("outer encoding") followed by a second encoding ("inner encoding"), results in either a "regular repeat accumulate" ("RRA") code or an "irregular repeat accumulate ("IRA") code, depending upon whether the repetition in the first encoding is regular or irregular.

Figure 4 of the '710 patent, reproduced below, shows an alternative embodiment in which the first encoding is carried out by a low density generator matrix.

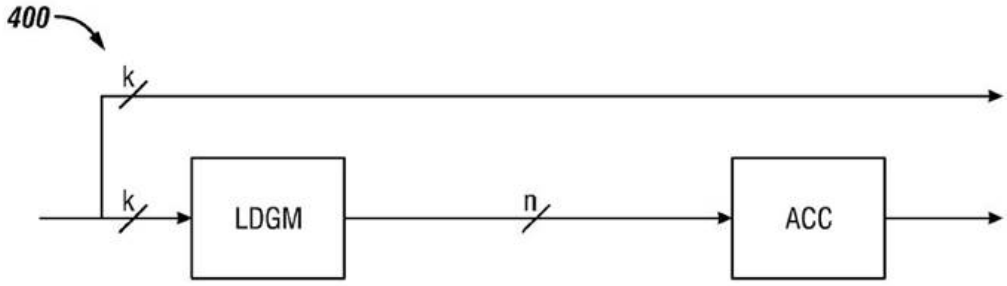

FIG. 4

Figure 4 of the '710 patent is a schematic of an irregular repeat and accumulate coder using a Low density generator matrix (LDGM)[2] coder. *Id*. at 2:20–21, 3:25. The LDGM coder "performs an irregular repeat of the k bits in the block, as shown in FIG. 4." *Id*. at 3:52–54. LDGM codes are a special class of low density parity check codes that allow for less encoding and decoding complexity. LDGM codes are systematic linear codes generated by a "sparse" generator matrix. No interleaver (as in the Figure 2 embodiment) is required in the Figure 4 embodiment because the LDGM provides scrambling otherwise provided by the interleaver.

C. Illustrative Claim

Petitioner challenges claims 1, 3, 4, 5, 6, 15, 16, 20, 21, and 22 of the '710 patent. Pet. 3–4. Claim 1 is illustrative of the claims at issue and is reproduced below:

> 1. A method of encoding a signal, comprising:
> obtaining a block of data in the signal to be encoded;

[2] A "generator" matrix (typically referred to by "G") is used to create (generate) codewords. A parity check matrix (typically referred to by "H") is used to decode a received message.

partitioning said data block into a plurality of sub-blocks, each sub-block including a plurality of data elements;

first encoding the data block to from a first encoded data block, said first encoding including repeating the data elements in different sub-blocks a different number of times;

interleaving the repeated data elements in the first encoded data block; and

second encoding said first encoded data block using an encoder that has a rate close to one.

D. The Alleged Grounds of Unpatentability

The information presented in the Petition sets forth proposed grounds of unpatentability of claims 1, 2, 4, 6, 8, 9, 10, 11, and 13 of the '710 patent as follows (*see* Pet. 15–50):

Reference(s)	Basis	Claim(s) Challenged
Frey[3]	§ 102(a)	1
Frey and Divsalar[4]	§ 103(a)	1, 3, 4, 5, 6, 15, 16, 21, and 22
Frey, Divsalar, and Hall[5]	§ 103(a)	15, 16, 21, and 22
Frey, Divsalar, and Ping[6]	§ 103(a)	20
Frey, Divsalar, Ping, and Hall	§ 103(a)	20

[3] Brendan J. Frey and David J.C. MacKay, *Irregular Turbocodes*, PROCEEDINGS OF THE 37TH ALLERTON CONFERENCE ON COMMUNICATION, CONTROL, AND COMPUTING (1999) at 1–7 (Ex.1012, "Frey).

[4] Dariush Divsalar, et al., *Coding Theorems for "Turbo-Like" Codes*, THIRTY-SIXTH ANNUAL ALLERTON CONFERENCE ON COMMUNICATION, CONTROL, AND COMPUTING, Sept. 23–25, 1998, at 201–209 (Ex. 1011, "Divsalar").

[5] Eric K. Hall, et al., *Stream-Oriented Turbo Codes*, 48TH IEEE VEHICULAR TECHNOLOGY CONFERENCE 1998 at 71-75 (Ex. 1013, "Hall").

[6] L. Ping, et al., *Low Density Parity Check Codes with Semi-Random Parity Check Matrix*, 35 ELECTRONIC LETTERS 38–39, 1999 (Ex. 1014, "Ping").

II. ANALYSIS[7]

A. Grounds based, in part, on Frey

Petitioner contends that claim 1 is unpatentable under 35 U.S.C. § 102(a) over Frey (Pet. 15–21) and that each of the challenged claims 1, 3, 4, 5, 6, 15, 16, 20, 21, and 22 are unpatentable under 35 U.S.C. § 103(a) as obvious over Frey in combination with other asserted prior art (Pet. 21–50). Thus, whether Frey is a prior art printed publication is a dispositive issue in this proceeding.

1. Frey (Ex. 1014)

Petitioner describes Frey as disclosing "a generalized two-step irregular code involving (1) a permutation and (2) a convolution." Pet. 10 (citing Ex. 1014 at 3–4; Figs. 1 and 2). Petitioner states that Frey was published at least by May 11, 2000 without direct citation, citing only the Declaration of David J.C. Mackay, Ex. 1060 ¶¶ 40–49 for indirect support. Pet. 2. Petitioner's list of Exhibits parenthetically notes that Frey was also "published no later than October 8, 1999 at the website of D.J.C. MacKay." Pet. iii.

Patent Owner challenges the availability of Frey as a printed publication as of the asserted date of May 11, 2000. Prelim. Resp. 21–24. Patent Owner argues that Petitioner makes no attempt to explain or support the contention that Frey was "published at least by May 11, 2000" other than the reference to the declaration of D.J.C. MacKay. *Id*. at 22. Patent Owner

[7] Patent Owner argues that, as a threshold matter, the Petition should be dismissed because Petitioner fails to identify all real parties in interest. Prelim. Resp. 3. Because we have determined that Petitioner has not demonstrated a reasonable likelihood of prevailing, we need not address the real parties in interest issue in this Decision.

contends that Petitioner has also failed to show that Frey was publicly accessible as of the asserted date. *Id*. (citing *In re Wyer*, 655 F.2d 221, 227 (CCPA 1981)).

Patent Owner states that the petition lacks any "discussion of the dissemination of Frey, such that a person of ordinary skill exercising reasonable diligence would have located this document as of the date alleged. Nor does the petition discuss whether Frey was sufficiently accessible to members of the public interested and ordinarily skilled in the art before the critical date. *In re Cronyn*, 890 F.2d 1158, 1160 (Fed. Cir. 1989)." Prelim. Resp. 23.

"Whether an anticipatory document qualifies as a 'printed publication' under § 102 is a legal conclusion based on underlying factual determinations." *SRI Int'l, Inc. v. Internet Sec. Sys., Inc*., 511 F.3d 1186, 1192 (Fed .Cir. 2008) (citation omitted); *see In re Klopfenstein*, 380 F.3d 1345, 1347 (Fed. Cir. 2004) ("Where no facts are in dispute, the question of whether a reference represents a 'printed publication' is a question of law.") In the present case, Petitioner has provided insufficient evidence and supporting argument that Frey, Ex. 1012, is a printed publication that was disseminated and sufficiently accessible to members of the public.[8]

[8] "Because there are many ways in which a reference may be disseminated to the interested public, 'public accessibility' has been called the *touchstone* in determining whether a reference constitutes a 'printed publication' bar under 35 U.S.C.§ 102(b)." *SRI Int'l, Inc*., 511 F.3d at 1194 (quoting *In re Hall*, 781 F.2d 897, 898–99 (Fed. Cir. 1986)). "A given reference is 'publicly accessible' upon a satisfactory showing that such document has been disseminated or otherwise made available to the extent that persons interested and ordinarily skilled in the subject matter or art exercising reasonable diligence, can locate it." *Id*. (quoting *Bruckelmyer v. Ground*

Although Petitioner's asserted date for publication of Frey appears to rely on the Allerton Conference, the Declaration of Dr. David J.C. MacKay—a co-author (with Frey) of the paper—discusses only publication of Frey via the MacKay website (Ex. 1060 ¶ 44). Indeed, the paragraphs of MacKay's testimony cited by Petitioner do not state that the Frey reference was published as part of the Allerton Conference, but merely indicates that it was submitted for publication. Ex. 1060 ¶ 43. We also note that although the first page of the Frey reference indicates that it was prepared for the 37th Allerton Conference in 1999 (Ex. 1012, 1), the pages of Exhibit 1012 do not indicate that it was taken from an Allerton Conference published proceeding as apparent from Divsalar (Ex. 1011). *Compare* Frey, Ex. 1012 *with* Divsalar, Ex 1011.

The silence of the Petition on whether the paper was published as part of the Allerton Conference proceedings and whether such a publication was received or shelved by a library is telling. Petitioner's sole reference to the MacKay declaration (Pet. 2, citing Ex. 1060 ¶¶ 40–49) does not provide sufficient support for the contention that Frey was published to the interested public as of May 11, 2000. Furthermore, the Petition provides insufficient testimony, evidence or argument with respect to the public accessibility of the MacKay website.

Heaters, Inc., 445 F.3d 1374, 1378 (Fed. Cir. 2006)); *see In re Cronyn*, 890 F.2d at 1160 ("[D]issemination and public accessibility are the keys to the legal determination whether a prior art reference was 'published.'" (quoting *Constant v. Advanced Micro-Devices, Inc*., 848 F.2d 1560, 1568 (Fed. Cir. 1988), *cert. denied*, 488 U.S. 892 (1988))).

Based on the record before us, Petitioner provides insufficient evidence by declaration or document to establish the public accessibility of Frey. *Cf. In re Hall*, 781 F.2d at 899 (examining affidavit in support of public availability of thesis). Petitioner's naked assertion that Frey was published (Pet. 2) is not supported sufficiently by the record.

Because each of Petitioner's asserted grounds of unpatentability is based, in part, on Frey (Pet. 3–4), and Petitioner has not met its burden of establishing that Frey is a "printed publication" and, thus, satisfies the statutory requirement of 35 U.S.C. § 311(b), Petitioner has not shown a reasonable likelihood of prevailing on the asserted grounds.

III. CONCLUSION

For the foregoing reasons, we determine that the information presented in the Petition does not establish a reasonable likelihood that Petitioner would prevail in establishing the unpatentability of: (1) claim 1 as anticipated by Frey; (2) claims 1, 3, 4, 5, 6, 15, 16, 20, 21, and 22 as obvious over Frey, Divsalar and Hall; (3) claims 15, 16, 211, and 22 as obvious over Frey, Divsalar and Hall; (4) claim 20 as obvious over Frey, Divsalar, and Ping; and (5) claim 20 as obvious over Frey, Divsalar, Ping, and Hall.

IV. ORDER

Accordingly, it is

ORDERED that pursuant to 35 U.S.C. § 314, an *inter partes* review is hereby denied as to all grounds raised in the Petition for the reasons stated above and no trial is instituted.

Case IPR2015-00067
Patent 7,116,710 B1

For PETITIONER:

Eliot Williams
eliot.williams@bakerbotts.com

G. Hopkins Guy III
hop.guy@bakerbotts.com

For PATENT OWNER:

Michael Rosato
mrosato@wsgr.com

Matthew Argenti
margenti@wsgr.com