Kathryn P. Hoek (219247)
Oleg Elkhunovich (269238)
SUSMAN GODFREY L.L.P.
1901 Avenue of the Stars, Suite 950
Los Angeles, California 90067-6029
Telephone: (310) 789-3100
Facsimile: (310) 789-3150
khoek@susmangodfrey.com
oelkhunovich@susmangodfrey.com

Joseph S. Grinstein (TX 24002188 *pro hac vice* to be filed)
SUSMAN GODFREY L.L.P.
1000 Louisiana, Suite 5100
Houston, Texas 77002-5096
Telephone: (713) 651-9366
Facsimile: (713) 654-6666
jgrinstein@susmangodfrey.com

Attorneys for Plaintiff Diamond Coating Technologies LLC

FILED
2013 SEP 23 PM 1:03
CLERK U.S. DISTRICT COURT
CENTRAL DIST. OF CALIF.
SANTA ANA
BY

UNITED STATES DISTRICT COURT

CENTRAL DISTRICT OF CALIFORNIA

SOUTHERN DIVISION

DIAMOND COATING TECHNOLOGIES, LLC, Plaintiff, vs. NISSAN NORTH AMERICA, INC. AND NISSAN MOTOR CO., LTD. Defendants.	Case No. **SACV13-01481 JVS (JPRx)** COMPLAINT FOR PATENT INFRINGEMENT JURY TRIAL DEMANDED

COMPLAINT FOR PATENT INFRINGEMENT

Plaintiff Diamond Coating Technologies LLC files this Complaint for patent infringement against Nissan Motor Co., Ltd. and Nissan North America, Inc. (collectively, "Defendants"). Plaintiff Diamond Coating Technologies LLC alleges:

THE PARTIES

1. Plaintiff Diamond Coating Technologies LLC ("DCT") is a limited liability company duly organized and existing under the laws of Delaware with its principal place of business in 3945 Freedom Circle, Suite 900, Santa Clara, CA 95054-1226.

2. DCT is the assignee and owner of four patents at issue in this action, U.S. Patent Nos. 5,629,086; 6,066,399; 6,071,103; and 6,354,008.

3. DCT is informed and believes, and on that basis alleges, that Defendant Nissan Motor Co., Ltd. ("NMC") is a Japanese corporation having a registered head office at 2, Takara-cho, Kanagawa-ku, Yokohama-shi, Kanagawa 220-8623, Japan, and global headquarters at 1-1, Takashima 1-chome, Nishi-ku, Yokohama-shi, Kanagawa 220-8686, Japan. NMC is the parent corporation of Nissan North America, Inc. NMC, through its various entities, designs, manufactures, markets, distributes and sells Nissan and Infinity automobiles in California and multiple other locations in the United States and worldwide.

4. DCT is informed and believes, and on that basis alleges, that Nissan North America, Inc. ("NNA") is a corporation duly organized under the laws of the State of California and having its principal place of business at One Nissan Way, Franklin, TN 37067. NNA is NMC's headquarters for management of North American operations and manufacturing. NNA manufactures and distributes Nissan and Infinity vehicles and sells these vehicles through its network of dealers.

JURISDICTION AND VENUE

5. This Court has subject matter jurisdiction pursuant to 28 U.S.C. §§ 1331 and 1338(a) because this action arises under the patent laws of the United States, 35 U.S.C. §§ 1 et seq.

6. Venue is proper in this federal district pursuant to 28 U.S.C. §§ 1391(b)-(c) and 1400(b).

7. Defendants have done business in this District, have sold infringing products in this District, and continue to sell infringing products in this District, entitling DCT to relief.

INFRINGEMENT OF U.S. PATENT NO. 5,629,086

8. On May 13, 1997, United States Patent No. 5,629,086 (the "'086 patent") was duly and legally issued for an invention entitled "Hard-Carbon-Film-Coated Substrate and Apparatus for Forming the Same." DCT was later assigned the '086 patent and continues to hold all rights and interest in the '086 patent. A true and correct copy of the '086 patent is attached hereto as Exhibit A.

9. Defendants have infringed and continue to infringe the '086 patent. Defendants manufacture, sell, import and/or offer for sale Nissan and Infinity vehicles utilizing parts coated with infringing hard carbon films. For example, defendants sell vehicles with engines containing parts, including, but not limited to, valve lifters and pistons, with infringing hard carbon film coatings. The use of hard carbon film coatings allows for a reduction of engine friction, wear reduction, and improved engine fuel efficiency. DCT is informed and believes, and on that basis alleges, that Nissan engine models containing parts with infringing hard carbon film coatings include, but are not limited to, HR16DE, MR16DDT, MRA8DE, QR25DE, VQ35DE, VQ37VHR, VR48DETT. DCT expressly also accuses all Nissan engine models not identified above that use the infringing hard carbon film coating. Defendants' vehicles with engines and other components containing parts with hard carbon film coating infringe the '086 patent under 35 U.S.C. § 271.

10. Defendants' acts of infringement have caused damage to DCT, and DCT is entitled to recover from Defendants the damages sustained by DCT as a result of Defendants' wrongful acts in an amount subject to proof at trial. Defendants' infringement of DCT's exclusive rights under the '086 patent will continue to damage DCT, causing irreparable harm for which there is no adequate remedy at law, unless enjoined by this Court.

INFRINGEMENT OF U.S. PATENT NO. 6,066,399

11. On May 23, 2000, United States Patent No. 6,066,399 (the "'399 patent") was duly and legally issued for an invention entitled "Hard Carbon Thin Film and Method of Forming the Same." DCT was later assigned the '399 patent and continues to hold all rights and interest in the '399 patent. A true and correct copy of the '399 patent is attached hereto as Exhibit B.

12. Defendants have infringed and continue to infringe the '399 patent. Defendants manufacture, sell, import and/or offer for sale Nissan and Infinity vehicles utilizing parts coated with infringing hard carbon films. For example, defendants sell vehicles with engines containing parts, including, but not limited to, valve lifters and pistons, with infringing hard carbon film coatings. The use of hard carbon film coatings allows for a reduction of engine friction, wear reduction, and improved engine fuel efficiency. DCT is informed and believes, and on that basis alleges, that Nissan engine models containing parts with infringing hard carbon film coatings include, but are not limited to, HR16DE, MR16DDT, MRA8DE, QR25DE, VQ35DE, VQ37VHR, VR48DETT. DCT expressly also accuses all Nissan engine models not identified above that use the infringing hard carbon film coating. Defendants' vehicles with engines and other components containing parts with hard carbon film coating infringe the '399 patent under 35 U.S.C. § 271.

13. Defendants' acts of infringement have caused damage to DCT, and DCT is entitled to recover from Defendants the damages sustained by DCT as a result of Defendants' wrongful acts in an amount subject to proof at trial.

Defendants' infringement of DCT's exclusive rights under the '399 patent will continue to damage DCT, causing irreparable harm for which there is no adequate remedy at law, unless enjoined by this Court.

INFRINGEMENT OF U.S. PATENT NO. 6,071,103

14. On June 6, 2000, United States Patent No. 6,071,103 (the "'103 patent") was duly and legally issued for an invention entitled "Member Having Sliding Contact Surface, Compressor and Rotary Compressor." DCT was later assigned the '103 patent and continues to hold all rights and interest in the '103 patent. A true and correct copy of the '103 patent is attached hereto as Exhibit C.

15. Defendants have infringed and continue to infringe the '103 patent. Defendants manufacture, sell, import and/or offer for sale Nissan and Infinity vehicles utilizing parts coated with infringing hard carbon films. For example, defendants sell vehicles with engines containing parts, including, but not limited to, valve lifters and pistons, with infringing hard carbon film coatings. The use of hard carbon film coatings allows for a reduction of engine friction, wear reduction, and improved engine fuel efficiency. DCT is informed and believes, and on that basis alleges, that Nissan engine models containing parts with infringing hard carbon film coatings include, but are not limited to, HR16DE, MR16DDT, MRA8DE, QR25DE, VQ35DE, VQ37VHR, VR48DETT. DCT expressly also accuses all Nissan engine models not identified above that use the infringing hard carbon film coating. Defendants' vehicles with engines and other components containing parts with hard carbon film coating infringe the '103 patent under 35 U.S.C. § 271.

16. Defendants' acts of infringement have caused damage to DCT, and DCT is entitled to recover from Defendants the damages sustained by DCT as a result of Defendants' wrongful acts in an amount subject to proof at trial. Defendants' infringement of DCT's exclusive rights under the '103 patent will continue to damage DCT, causing irreparable harm for which there is no adequate remedy at law, unless enjoined by this Court.

INFRINGEMENT OF U.S. PATENT NO. 6,354,008

17. On March 12, 2002, United States Patent No. 6,354,008 (the "'008 patent") was duly and legally issued for an invention entitled "Sliding Member, Inner and Outer Blades of an Electronic Shaver and Film-Forming Method." DCT was assigned the '008 patent and continues to hold all rights and interest in the '008 patent. A true and correct copy of the '008 patent is attached hereto as Exhibit D.

18. Defendants have infringed and continue to infringe the '008 patent. Defendants manufacture, sell, import and/or offer for sale Nissan and Infinity vehicles utilizing parts coated with infringing hard carbon films. For example, defendants sell vehicles with engines containing parts, including, but not limited to, valve lifters and pistons, with infringing hard carbon film coatings. The use of hard carbon film coatings allows for a reduction of engine friction, wear reduction, and improved engine fuel efficiency. DCT is informed and believes, and on that basis alleges, that Nissan engine models containing parts with infringing hard carbon film coatings include, but are not limited to, HR16DE, MR16DDT, MRA8DE, QR25DE, VQ35DE, VQ37VHR, VR48DETT. DCT expressly also accuses all Nissan engine models not identified above that use the infringing hard carbon film coating. Defendants' vehicles with engines and other components containing parts with hard carbon film coating infringe the '008 patent under 35 U.S.C. § 271.

19. Defendants' acts of infringement have caused damage to DCT, and DCT is entitled to recover from Defendants the damages sustained by DCT as a result of Defendants' wrongful acts in an amount subject to proof at trial. Defendants' infringement of DCT's exclusive rights under the '008 patent will continue to damage DCT, causing irreparable harm for which there is no adequate remedy at law, unless enjoined by this Court.

WILLFUL INFRINGEMENT

20. Upon information and belief, the Defendants' infringement of any or all of the above-named patents is willful and deliberate, entitling DCT to increased

damages under 35 U.S.C. § 284 and to attorney's fees and costs incurred in prosecuting this action under 35 U.S.C. § 285.

21. Defendants had prior knowledge of the patented technology because DCT provided notice of the patents to Defendants in 2008 and 2011. Moreover, DCT met with Defendants and attempted unsuccessfully to negotiate a license with them.

JURY DEMAND

22. DCT demands a trial by jury on all issues.

PRAYER FOR RELIEF

WHEREFORE, Plaintiff DCT requests entry of judgment in its favor and against Defendants as follows:

a) Declaration that Defendants have infringed directly, and/or indirectly, U.S. Patent Nos. 5,629,086, 6,066,399, 6,071,103, and 6,354,008;

b) Permanently enjoining Defendants and their respective officers, agents, employees, and those acting in privity with them, from further infringement, contributory infringement and/or inducing infringement of U.S. Patent Nos. 5,629,086, 6,066,399, 6,071,103, and 6,354,008;

c) Awarding the damages arising out of Defendants' infringement of U.S. Patent Nos. 5,629,086, 6,066,399, 6,071,103, and 6,354,008, including enhanced damages pursuant to 35 U.S.C. § 284 together with prejudgment and post-judgment interest, in an amount according to proof;

d) An award of attorney's fees pursuant to 35 U.S.C. § 285 or as otherwise permitted by law; and

For such other costs and further relief as the Court may deem just and proper.

Dated: September 23, 2013

KATHRYN P. HOEK
OLEG ELKHUNOVICH
JOSEPH S. GRINSTEIN
SUSMAN GODFREY L.L.P.

By: Kathryn P. Hoek
Kathryn P. Hoek
Attorneys for Plaintiff DCT

Exhibit A

US005629086A

United States Patent [19]

Hirano et al.

[11] Patent Number: 5,629,086

[45] Date of Patent: May 13, 1997

[54] **HARD-CARBON-FILM-COATED SUBSTRATE AND APPARATUS FOR FORMING THE SAME**

[75] Inventors: **Hitoshi Hirano**; **Keiichi Kuramoto**; **Yoichi Domoto**; **Seiichi Kiyama**, all of Moriguchi, Japan

[73] Assignee: **Sanyo Electric Co., Ltd.**, Moriguchi, Japan

[21] Appl. No.: **464,544**

[22] Filed: **Jun. 5, 1995**

Related U.S. Application Data

[62] Division of Ser. No. 259,480, Jun. 14, 1994.

[30] **Foreign Application Priority Data**

Jul. 7, 1993	[JP]	Japan	5-167866
Jul. 29, 1993	[JP]	Japan	5-188084
Aug. 23, 1993	[JP]	Japan	5-207912

[51] **Int. Cl.**[6] **C04B 41/85**

[52] **U.S. Cl.** **428/336**; 428/408; 428/446; 428/457; 428/469; 428/698; 428/701; 428/702

[58] **Field of Search** 428/408, 446, 428/457, 469, 698, 336, 701, 702

[56] **References Cited**

U.S. PATENT DOCUMENTS

4,647,494	3/1987	Meyerson et al.	428/446
4,707,384	11/1987	Schachner et al.	428/408
5,380,349	1/1995	Taniguchi et al.	65/286

FOREIGN PATENT DOCUMENTS

3047888	7/1982	Germany .

Primary Examiner—Archene Turner
Attorney, Agent, or Firm—W. G. Fasse; W. F. Fasse

[57] **ABSTRACT**

A hard-carbon-film-coated substrate includes in stacked sequence a substrate, an intermediate layer, and a hard carbon film. The substrate consists of a metal or an alloy mainly composed of Ni or Al, or stainless steel. The intermediate layer is mainly composed of Ru, Si, Ge or carbon, or is a mixed layer including Ru, Si, or Ge mixed with at least one of carbon, nitrogen or oxygen, with a composition gradient across its thickness. An apparatus for forming the coated substrate especially includes means for forming the intermediate layer and means for forming the hard carbon film in the same vacuum chamber.

29 Claims, 11 Drawing Sheets

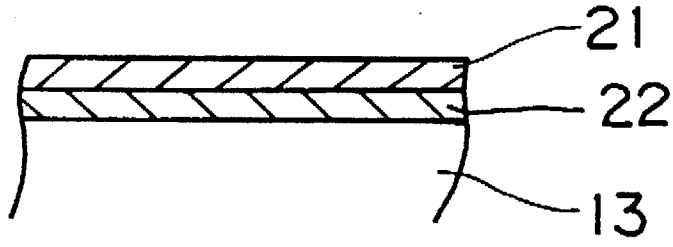

FIG. 1

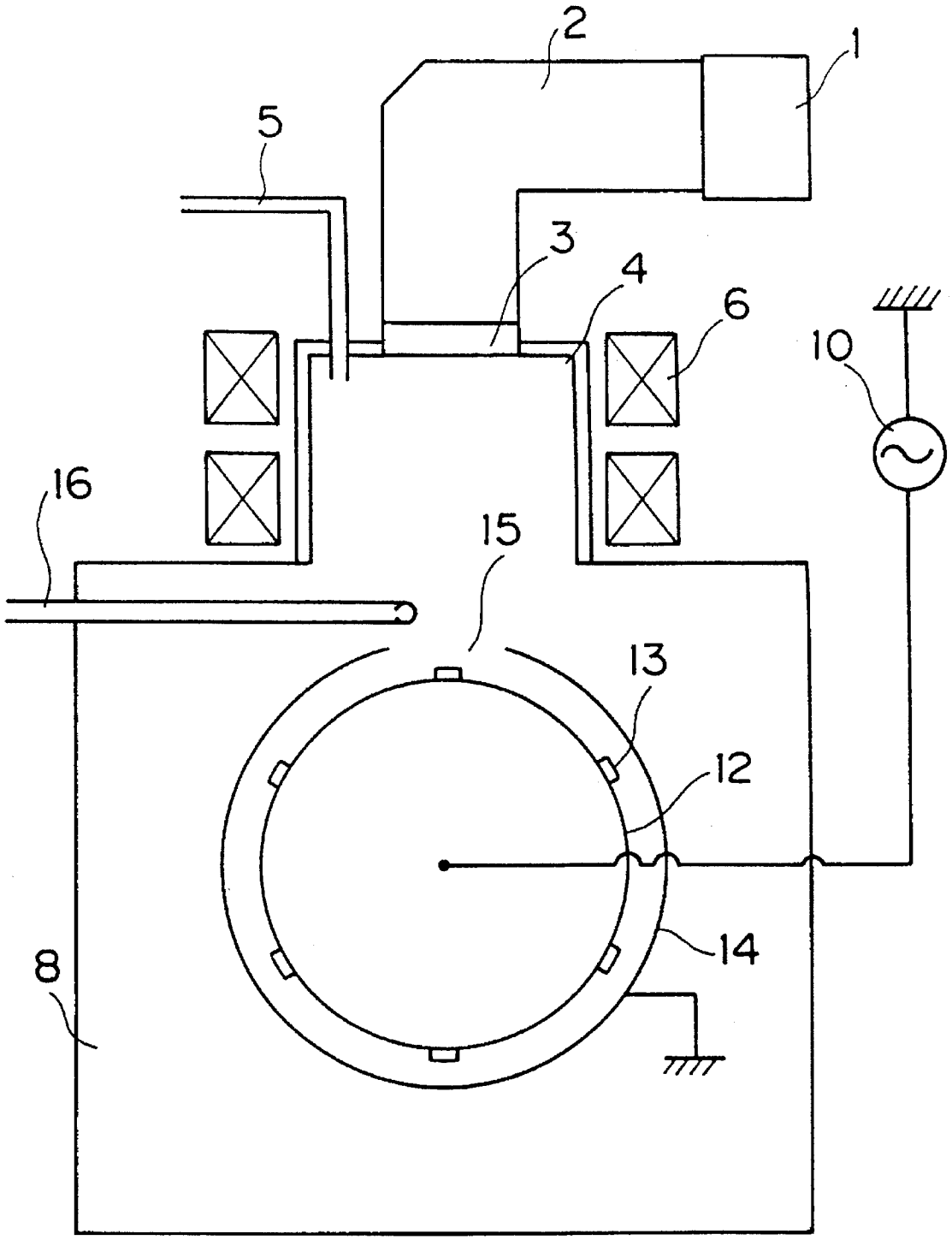

FIG. 2

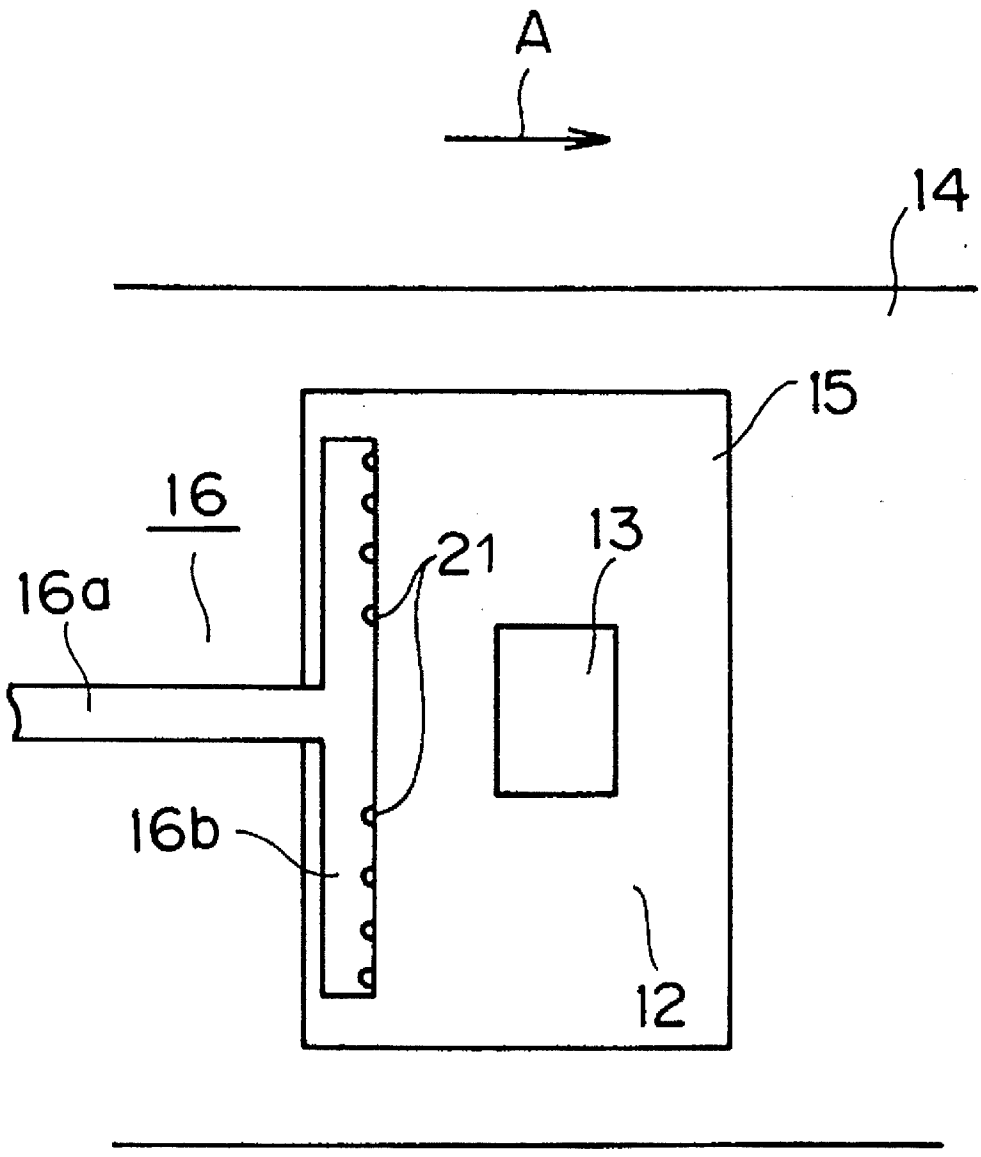

FIG. 3

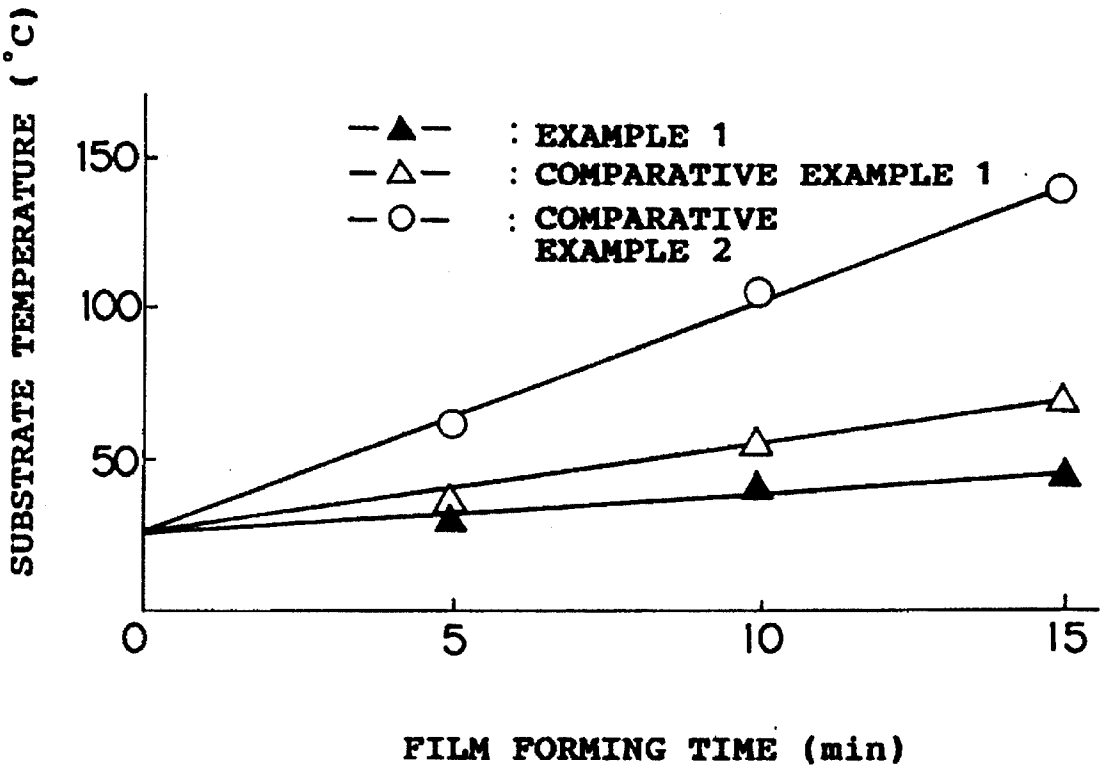
SUBSTRATE TEMPERATURE (°C)
150
100
50
0
5
10
15
—▲— : EXAMPLE 1
—△— : COMPARATIVE EXAMPLE 1
—○— : COMPARATIVE EXAMPLE 2
FILM FORMING TIME (min)

FIG. 4

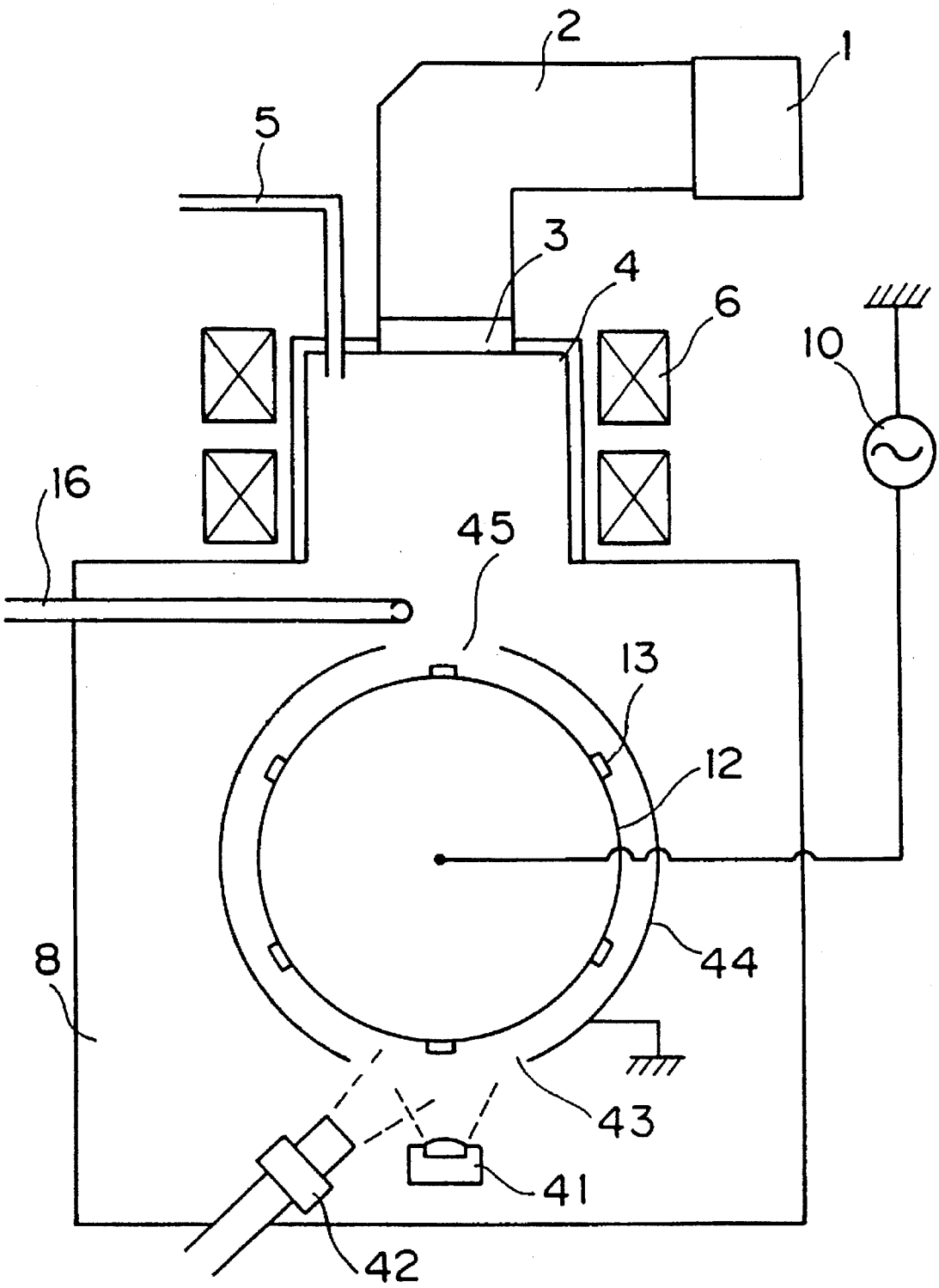

FIG. 5

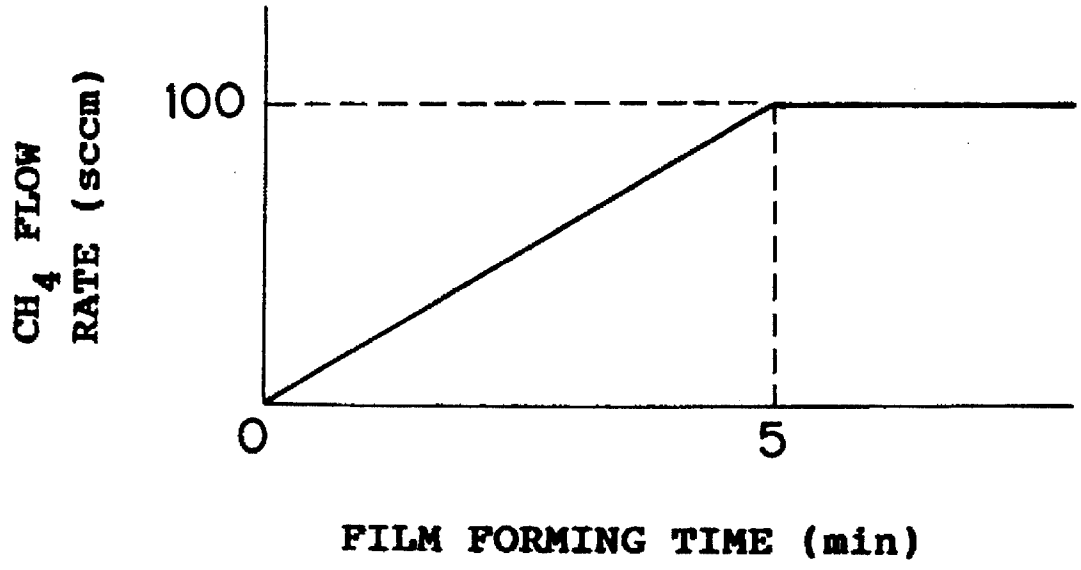
CH_4 FLOW RATE (sccm)
100
0
5
FILM FORMING TIME (min)

FIG. 6

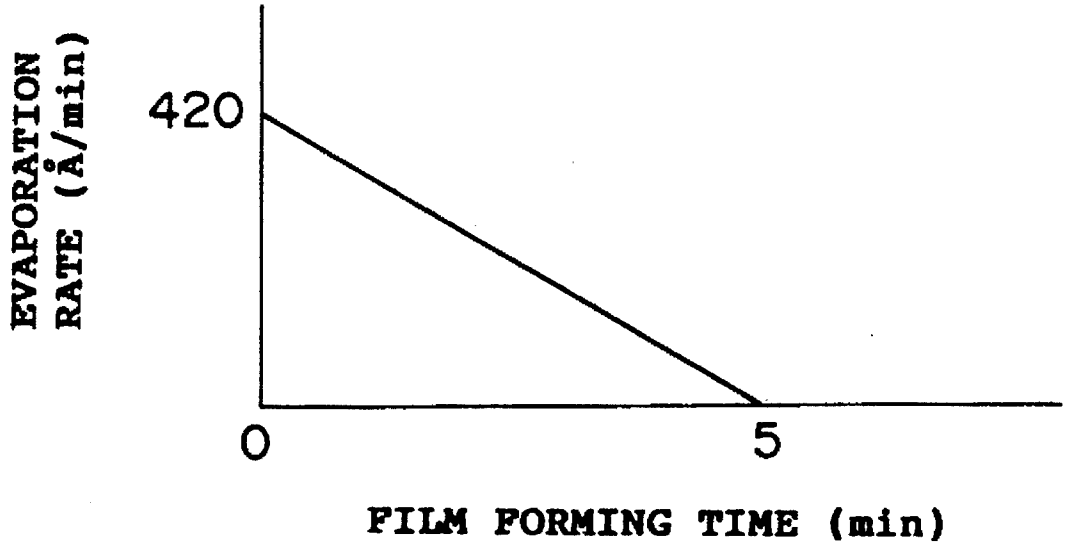
EVAPORATION RATE (Å/min)
420
0
5
FILM FORMING TIME (min)

FIG. 7

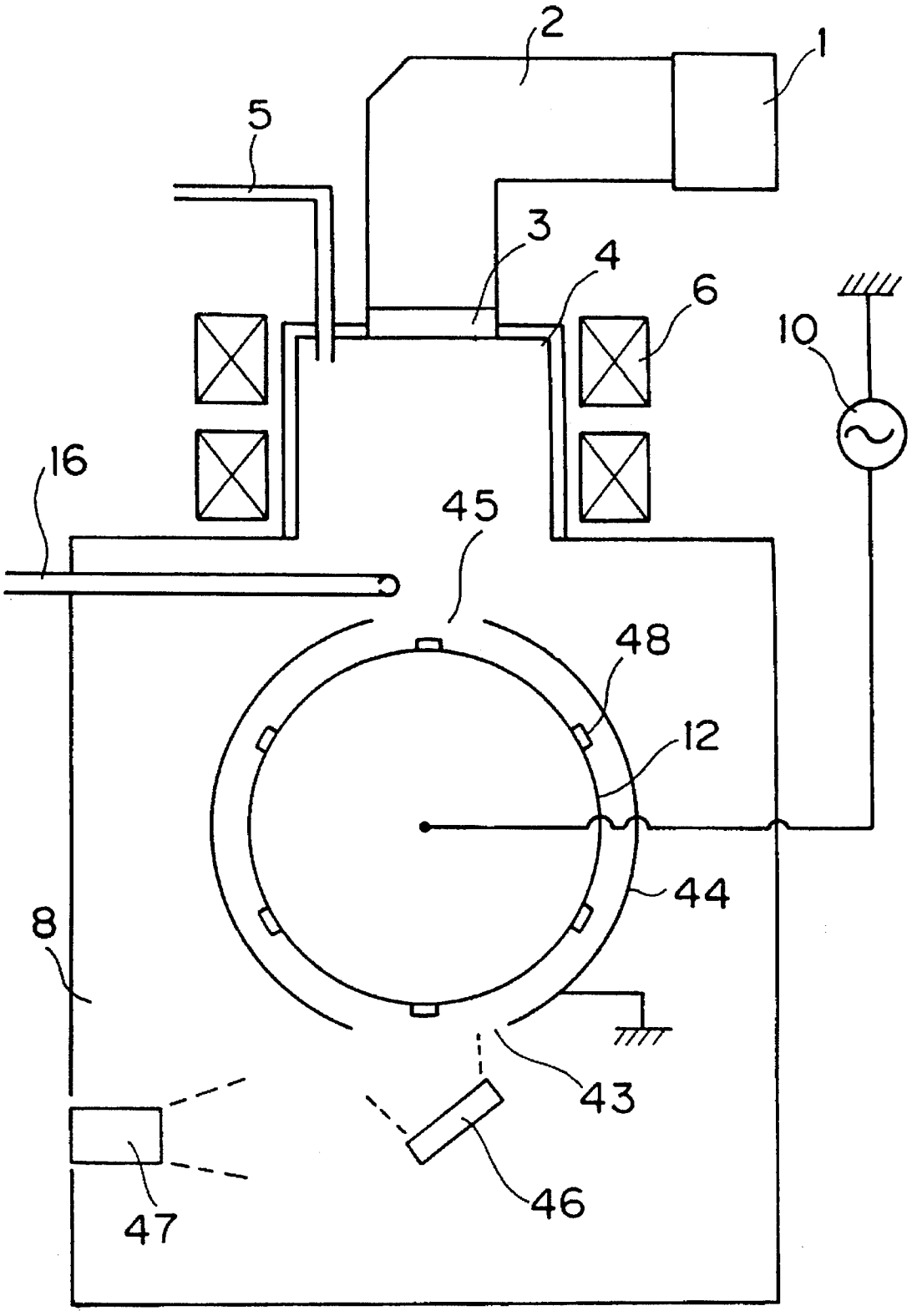

FIG. 8

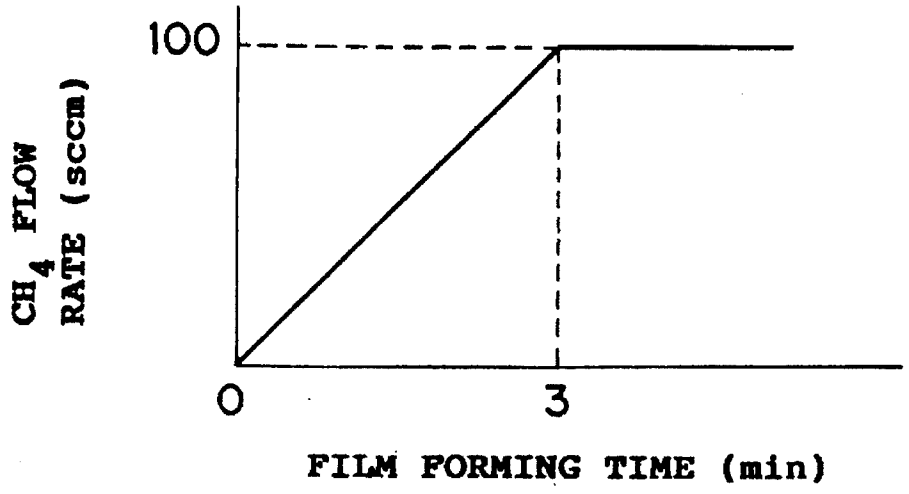
100
CH_4 FLOW RATE (sccm)
0
3
FILM FORMING TIME (min)

FIG. 9

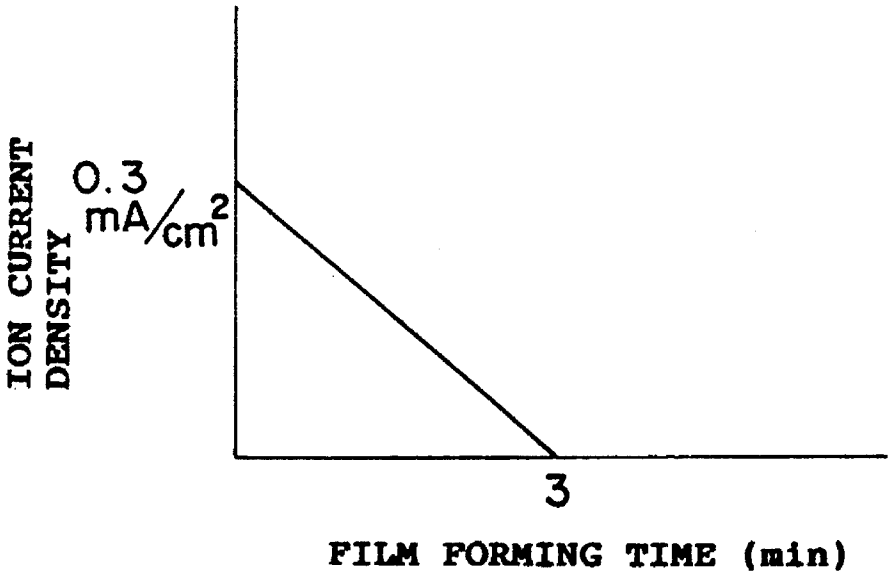
ION CURRENT DENSITY
0.3 mA/cm²
3
FILM FORMING TIME (min)

FIG. 10

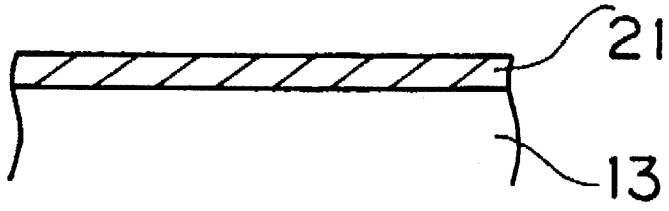

FIG. 11

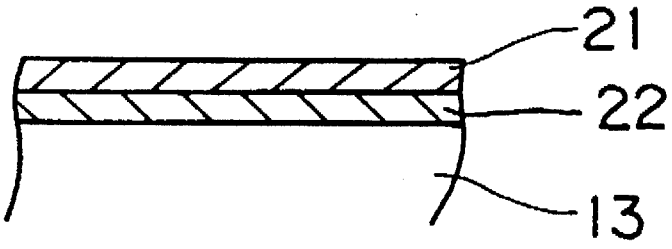

FIG. 12 PRIOR ART

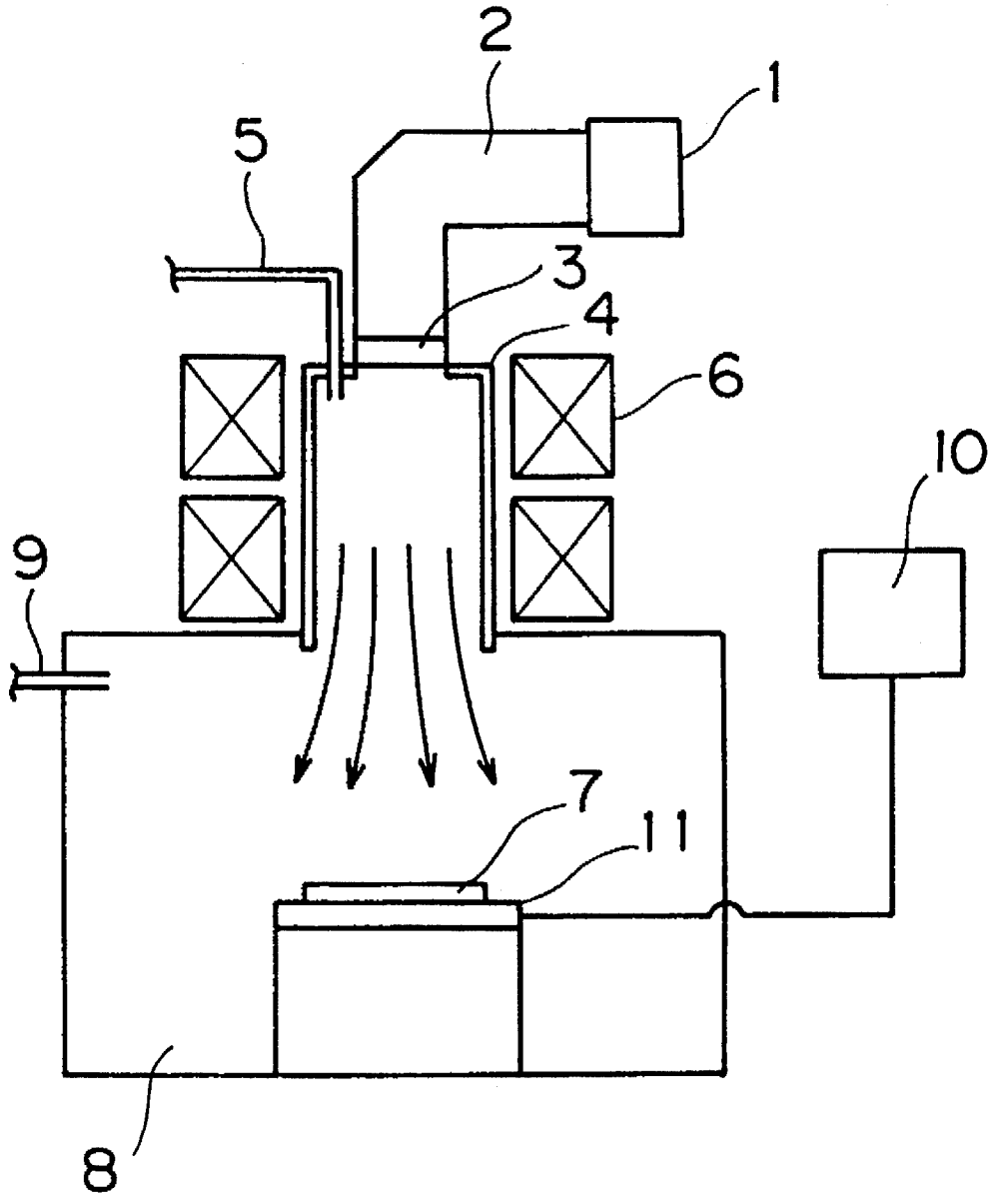

FIG. 13

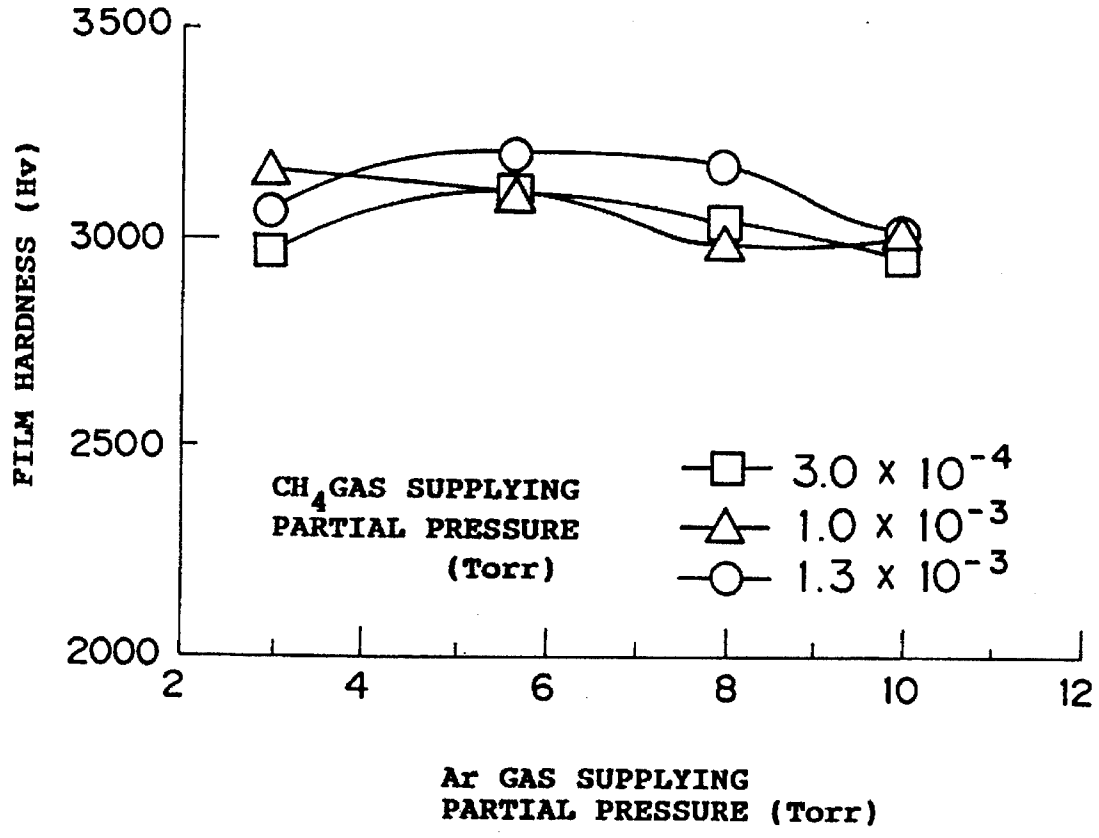
3500
3000
2500
2000
2
4
6
8
10
12
FILM HARDNESS (Hv)
CH4 GAS SUPPLYING PARTIAL PRESSURE (Torr)
3.0 x 10-4
1.0 x 10-3
1.3 x 10-3
Ar GAS SUPPLYING PARTIAL PRESSURE (Torr)

FIG. 14

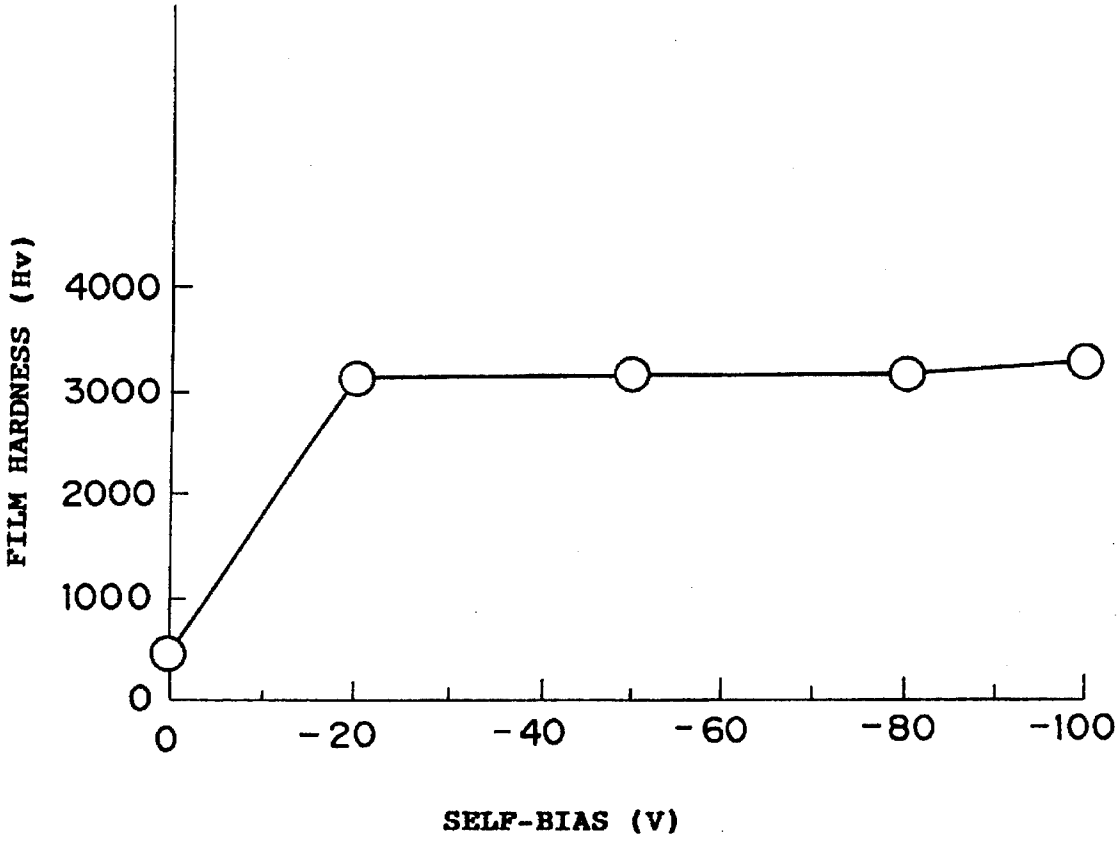
FILM HARDNESS (Hv)
4000
3000
2000
1000
0
0
-20
-40
-60
-80
-100
SELF-BIAS (V)

HARD-CARBON-FILM-COATED SUBSTRATE AND APPARATUS FOR FORMING THE SAME

CROSS-REFERENCE TO RELATED APPLICATION

This is a DIVISIONAL of U.S. patent application Ser. No. 08/259,480, filed Jun. 14, 1994.

BACKGROUND OF THE INVENTION

1. Field of the Invention

The present invention relates to a substrate coated with a hard carbon film which is applicable to a cutter such as an electric shaver or a thin-film head, and a method of and an apparatus for forming the same.

2. Description of the Background Art

In order to improve adhesion between a substrate such as a ceramic substrate or a silicon substrate and a diamond-like carbon film, it has generally been proposed to form an intermediate layer between the substrate and the diamond-like carbon film. Japanese Patent Laying-Open No. 1-317197 (1989) discloses a technique of forming an intermediate layer mainly composed of silicon on a substrate by plasma CVD, and then forming a diamond-like carbon film on the intermediate layer. The intermediate layer improves the adhesion of the diamond-like carbon film to the substrate as compared with the case of directly forming a diamond-like carbon film on a substrate.

However, no studies have been conducted relating to the formation of an intermediate layer between a diamond-like carbon film and a substrate of nickel (Ni), aluminum (Al) or stainless steel for application to a cutter such as an electric shaver cutter.

On the other hand, an apparatus described in Japanese Patent Laying-Open No. 3-175620 (1991) is known for forming a hard carbon film by plasma CVD. This apparatus is adapted to form a diamond-like carbon film, which is a hard carbon film, on a substrate by bias plasma CVD employing an ECR (electron cyclotron resonance) plasma CVD apparatus.

FIG. **12** typically illustrates such a conventional apparatus for forming a diamond-like carbon film. Referring to FIG. **12**, microwave supply means **1** generates a microwave that passes through a waveguide **2** and a microwave inlet window **3** to be guided to a plasma generation chamber **4**. This plasma generation chamber **4** is provided with a discharge gas inlet pipe **5** for introducing a discharge gas such as argon (Ar) gas. Further, a plasma magnetic field generator **6** is provided around the plasma generation chamber **4**. Due to the action of a high-frequency magnetic field which is formed by the microwave and a magnetic field generated by the plasma magnetic field generator **6**, a plasma of high density is formed in the plasma generation chamber **4**. This plasma is guided to a vacuum chamber **8** in which a substrate **7** is arranged, along the magnetic field diverged by the plasma magnetic field generator **6**.

The vacuum chamber **8** is provided therein with a reaction gas inlet pipe **9** for introducing methane (CH_4) gas serving as a raw material gas. The methane gas which is introduced into the vacuum chamber **8** by the reaction gas inlet pipe **9** is decomposed by action of the plasma, to form a carbon film. A high-frequency power source **10**, with a frequency of 13.56 MHz, for example, is provided externally of the vacuum chamber **8** for applying a prescribed high-frequency voltage (RF voltage) to a substrate holder **11**, thereby

developing a negative self-bias in the substrate **7**. Ions travel in the plasma at a lower speed than electrons, and hence, unlike the electrons, the ions cannot follow the potential deflection during application of the RF voltage. Thus, a large quantity of electrons are emitted toward the substrate **7** due to application of the RF voltage, whereby a negative self-bias is developed in the substrate **7**. Thus, positive ions contained in the plasma are drawn to form a diamond-like carbon film on the substrate **7**.

In such a conventional apparatus, the substrate **7** is mounted on the substrate holder **11** which is provided in the vacuum chamber **8**, and thereafter the vacuum chamber **8** is evacuated for forming a film. Thus, this apparatus can treat only one substrate, or two substrates at the most, in a single film forming operation.

In the conventional apparatus, further, discharge is also caused in the vicinity of a portion of the substrate that is mounted on the substrate holder, i.e. a portion of the substrate that is not to be provided with a film. This effect disadvantageously increases the temperature of the substrate.

SUMMARY OF THE INVENTION

An object of the present invention is to provide a hard-carbon-film-coated substrate comprising a substrate of a metal or an alloy which is mainly composed of Ni or Al, or stainless steel, and a hard carbon film provided thereon, with excellent adhesion between the substrate and the hard carbon film.

Another object of the present invention is to provide a hard carbon film forming apparatus that can simultaneously treat a plurality of substrates in a single process while preventing excess temperature increase of the substrates, for effectively forming hard carbon films on the substrates.

The concept of the hard carbon film according to the present invention also includes a crystalline carbon film or amorphous diamond-like carbon film.

A hard-carbon-film-coated substrate according to a first aspect of the present invention comprises a substrate consisting of a metal or an alloy mainly composed of Ni or Al, or stainless steel, an intermediate layer mainly composed of Ru formed on the substrate, and a hard carbon film formed on the intermediate layer.

According to the first aspect of the present invention, the intermediate layer mainly composed of Ru is provided between the substrate and the hard carbon film. Adhesion between the substrate and the hard carbon film is improved by such an intermediate layer.

The intermediate layer is preferably a mixed layer of Ru and at least one element of carbon, nitrogen and oxygen. The composition ratio of such a mixed layer is preferably graded along its thickness. In other words, the mixed layer preferably has a graded composition structure or gradient with a higher Ru content closer to the substrate and a higher content of carbon, nitrogen and/or oxygen closer to the hard carbon film.

A method of forming the diamond-like carbon film coated substrate according to the first aspect of the present invention comprises a step of emitting ions of an inert gas toward a substrate arranged in a vacuum chamber while simultaneously emitting material atoms for forming an intermediate layer from an evaporation source toward the substrate thereby forming an intermediate layer on the substrate, and a step of supplying a reaction gas containing carbon into the vacuum chamber for forming a plasma and emitting the

plasma toward the intermediate layer thereby forming a hard carbon film on the intermediate layer.

A hard-carbon-film-coated substrate comprising an intermediate layer that is a mixed layer of Ru and at least one element of carbon, nitrogen and oxygen can be formed by any of the following methods.

One method according to the first aspect of the present invention comprises a step of supplying a reaction gas containing carbon into a vacuum chamber with a gradually increasing supply quantity for forming a plasma, and emitting the plasma toward a substrate arranged in the vacuum chamber while also emitting ions of an inert gas toward the substrate and simultaneously emitting material atoms for forming an intermediate layer from an evaporation source toward the substrate at a gradually reducing evaporation rate thereby forming an intermediate layer consisting of a mixed layer of the material atoms and carbon, nitrogen and/or oxygen on the substrate. The method further comprises a step of supplying a reaction gas containing carbon, nitrogen and/or oxygen into the vacuum chamber for forming a plasma, and emitting the plasma toward the intermediate layer thereby forming a hard carbon film on the intermediate layer.

A hard-carbon-film-coated substrate according to a second aspect of the present invention comprises a substrate consisting of a metal or an alloy mainly composed of Ni or Al, or stainless steel, an intermediate layer mainly composed of Si or Ge formed on the substrate, and a hard carbon film formed on the intermediate layer.

According to the second aspect of the present invention, an intermediate layer mainly composed of Si or Ge is provided between the substrate and a diamond-like carbon film. Adhesion between the substrate and the diamond-like carbon film is improved by such an intermediate layer.

According to the second aspect of the present invention, the intermediate layer is preferably a mixed layer of Si or Ge and carbon, nitrogen or oxygen whose composition ratio is graded along its thickness. The mixed layer preferably has a higher Si or Ge content closer to the substrate and a higher carbon, nitrogen or oxygen content closer to the hard carbon film.

When the hard-carbon-film-coated substrate according to the second aspect of the present invention is used for an inner blade of an electric shaver, the intermediate layer is preferably in a range of 50 to 8000 Å in thickness.

When the hard-carbon-film-coated substrate according to the second aspect of the present invention is used for an outer blade of an electric shaver, on the other hand, the intermediate layer is preferably within a range of 50 to 4000 Å in thickness.

The effect of improving adhesion is reduced if the intermediate layer is too thin, while no further improvement in the adhesion is achieved if the thickness is increased beyond the aforementioned range.

A method of forming the hard-carbon-film-coated substrate according to the second aspect of the present invention comprises a step of sputtering material atoms for forming an intermediate layer by irradiation with ions of an inert gas, thereby forming an intermediate layer on a substrate arranged in a vacuum chamber. This method further comprises a step of supplying a reaction gas containing carbon into the vacuum chamber for forming a plasma and emitting the plasma toward the intermediate layer, thereby forming a hard carbon film on the intermediate layer.

One method according to the second aspect of the present invention comprises a step of supplying a reaction gas containing carbon, nitrogen or oxygen into a vacuum chamber with a gradually increasing supply quantity for forming a plasma and emitting the plasma toward a substrate arranged in the vacuum chamber while sputtering material atoms for forming an intermediate layer by irradiating the same with ions of an inert gas with a gradually reducing or decreasing amount of irradiation, thereby forming an intermediate layer consisting of a mixed layer of the material atoms and carbon, nitrogen or oxygen. This method further comprises a step of supplying a reaction gas containing carbon into the vacuum chamber for forming a plasma and emitting the plasma toward the intermediate layer, thereby forming a hard carbon film on the intermediate layer.

According to this method, it is possible to form an intermediate layer having a graded structure.

A hard-carbon-film-coated substrate according to a third aspect of the present invention comprises a substrate consisting of a metal or an alloy mainly composed of Ni or Al, or stainless steel, an intermediate layer mainly composed of carbon formed on the substrate, and a hard carbon film formed on the intermediate layer.

According to the third aspect of the present invention, the intermediate layer mainly composed of carbon is provided between the substrate and a diamond-like carbon film. Adhesion between the substrate and the diamond-like carbon film is improved by such an intermediate layer.

When the hard-carbon-film-coated substrate comprising a carbon thin film as the intermediate layer is used for an inner blade of an electric shaver, the carbon thin film is preferably within a range of 50 to 8000 Å in thickness, while it preferably has a thickness of 50 to 4000 Å when the hard-carbon-film-coated substrate is used for an outer blade of an electric shaver.

The effect of improving adhesion is reduced if the intermediate layer is too thin, while no further improvement in adhesion is achieved if the thickness is in excess of the aforementioned range.

A hard-carbon-film-coated substrate according to the third aspect can be formed by the method according to the second aspect of the present invention.

A method according to a fourth aspect of the present invention is adapted to form a hard carbon film on a substrate, and comprises a step of generating a plasma of an inert gas by electron cyclotron resonance, a step of applying a high-frequency voltage to a substrate so that a self-bias developed in the substrate is not more than –20 V, and a step of emitting the plasma of the inert gas toward the substrate through an opening of a shielding cover which is provided above the substrate while supplying a reaction gas containing carbon gas into the plasma for forming a hard carbon film on the substrate.

In the method according to the fourth aspect of the present invention, the inert gas is preferably Ar gas, and the reaction gas containing carbon is preferably CH_4 gas. Such Ar gas and CH_4 gas are preferably supplied at partial pressures of at least 1.0×10^{-4} Torr and not more than 20.0×10^{-4} Torr.

A hard carbon film forming apparatus according to a fifth aspect of the present invention is adapted to form a hard carbon film on a substrate, and comprises a vacuum chamber, a substrate holder which is rotatably provided in the vacuum chamber, a shielding cover having an opening therein, which is provided to enclose a peripheral surface of the substrate holder, plasma generation means for generating a plasma in the vacuum chamber and emitting the plasma toward the substrate through the opening, reaction gas inlet means for supplying a reaction gas containing carbon into

the plasma which is generated from the plasma generation means, and a high-frequency power source for applying a high-frequency voltage to the substrate holder so that a self-bias which is developed in the substrate goes negative.

A hard carbon film forming apparatus according to a sixth aspect of the present invention is adapted to form an intermediate layer on a substrate for further forming a hard carbon film on the intermediate layer, and comprises a vacuum chamber, a substrate holder which is rotatably provided in the vacuum chamber, a shielding cover having first and second openings therein, which is provided to enclose a peripheral surface of the substrate holder, plasma generation means for generating a plasma in the vacuum chamber and emitting the plasma toward the substrate through the first opening, reaction gas inlet means for supplying a reaction gas containing carbon into the plasma which is generated from the plasma generation means, a high-frequency power source for applying a high-frequency voltage to the substrate holder so that a self-bias which is developed in the substrate goes negative, and intermediate layer forming means provided in the vacuum chamber for emitting material atoms for forming an intermediate layer toward the substrate through the second opening.

An apparatus according to a seventh aspect of the present invention is an exemplary apparatus according to the sixth aspect, and is characterized in that the intermediate layer forming means comprises an evaporation source provided in the vacuum chamber for emitting the material atoms for forming an intermediate layer toward the substrate through the second opening, and an ion gun for emitting ions of an inert gas toward the substrate through the second opening simultaneously with emission of the material atoms from the evaporation source.

An apparatus according to an eighth aspect of the present invention is another exemplary apparatus according to the sixth aspect, and is characterized in that the intermediate layer forming means comprises a target consisting of the material atoms for forming an intermediate layer, which target is provided in the vacuum chamber for sputtering the material atoms toward the substrate through the second opening, and an ion gun for emitting ions of an inert gas toward the target for sputtering the same.

In the apparatus according to the present invention, the plasma generation means is preferably an electron cyclotron resonance plasma CVD apparatus.

In the apparatus according to the present invention, the shielding cover is preferably separated from the peripheral surface of the substrate holder at a distance of not more than a mean free path of the gas molecules, and more preferably 1/10 of the mean free path of the gas molecules.

In the apparatus according to the present invention, the shielding cover is preferably maintained at a prescribed potential, and is more preferably grounded.

In the apparatus according to the present invention, the material atoms for forming an intermediate layer are atoms of Si, Ru, carbon or Ge, or a mixture of Si, Ru, carbon or Ge and at least one of carbon, nitrogen and oxygen, for example, and the hard carbon film is formed at least indirectly on a substrate consisting of a metal or an alloy mainly composed of Ni or Al, or stainless steel, for example, through such an intermediate layer.

The apparatus according to the present invention comprises the substrate holder which is rotatably provided in the vacuum chamber. Therefore, it is possible to mount a plurality of substrates on the substrate holder, thereby increasing the number of substrates that can be treated with a single evacuation.

In the apparatus according to the present invention, the shielding cover is provided to enclose the peripheral surface of the substrate, so that the plasma which is generated from the plasma generation means is emitted through the opening of the shielding cover for forming the hard carbon film on the substrate. Due to such a shielding cover, it is possible to prevent the occurrence of discharge at locations other than those where it is intended to form the film, thereby suppressing a temperature increase of the substrate.

A method of forming the hard-carbon-film-coated substrate according to a ninth aspect of the present invention comprises a step of supplying a gas containing material atoms for forming an intermediate layer into a vacuum chamber for forming a plasma and emitting the plasma toward a substrate thereby forming an intermediate layer on the substrate. This method further comprises a step of supplying a reaction gas containing carbon into the vacuum chamber for forming a plasma and emitting the plasma toward the intermediate layer thereby forming a hard carbon film on the intermediate layer.

According to the sixth aspect of the present invention, the intermediate layer forming means is provided for emitting the material atoms for forming an intermediate layer toward the substrate through the second opening of the shielding cover. Therefore, it is possible to form the intermediate layer as well as the hard carbon film with a single evacuation. Further, it is possible to control the formation of the hard carbon film and that of the intermediate layer independently of each other. Thus, it is possible to form the hard carbon film after a desired intermediate layer is formed on the substrate.

Further, it is possible to control the material composition ratio of the intermediate layer as desired by alternately repeating deposition of the carbon film by plasma CVD through the first opening and deposition of the material atoms for forming an intermediate layer through the second opening. Thus, it is possible to bring the material composition ratio of the intermediate layer into a graded structure gradually approaching the composition of the hard carbon film toward the hard carbon film. Due to formation of the intermediate layer having such a graded structure, it is possible to further improve adhesion between the substrate and the hard carbon film.

In the apparatus according to the fifth aspect of the present invention, the substrate holder is provided in the vacuum chamber, so that a number of substrates can be mounted on the substrate holder. Thus, it is possible to increase the number of substrates that can be treated in a single evacuation.

The shielding cover is provided around the substrate holder, whereby it is possible to prevent the occurrence of discharge in the vicinity of a substrate portion other than that which is to be provided with the film. Thus, it is possible to form the film while maintaining the substrate at a low temperature, whereby it is unnecessary to consider the heat resistance of the substrate.

The apparatus according to the sixth aspect of the present invention is further provided with the intermediate layer forming means. Thus, it is possible to form the intermediate layer on the substrate in a single evacuation step.

Further, it is possible to change the material composition ratio of the intermediate layer by alternately forming thin films by the plasma generation means and by the intermediate layer forming means and changing the respective thin film forming conditions. Thus, it is possible to form an intermediate layer having a graded structure, thereby further improving the adhesion between the substrate and the hard carbon film.

The foregoing and other objects, features, aspects and advantages of the present invention will become more apparent from the following detailed description of the present invention when taken in conjunction with the accompanying drawings.

BRIEF DESCRIPTION OF THE DRAWINGS

FIG. **1** is a schematic sectional view showing a hard carbon film forming apparatus in an embodiment according to the fifth aspect of the present invention;

FIG. **2** is a plan view showing a portion around a forward end of a reaction gas inlet pipe provided in the embodiment shown in FIG. **1**;

FIG. **3** illustrates the relations between film forming times and substrate temperatures in an example of the present invention and comparative examples;

FIG. **4** is a schematic sectional view showing a hard carbon film forming apparatus in an embodiment according to the seventh aspect of the present invention;

FIG. **5** illustrates the relation between a film forming time and a CH_4 flow rate in the formation of an intermediate layer having a graded structure with the apparatus of the embodiment according to the seventh aspect of the present invention;

FIG. **6** illustrates the relation between the film forming time and an evaporation rate in the formation of the intermediate layer having a graded structure with the apparatus of the embodiment according to the seventh aspect of the present invention;

FIG. **7** is a schematic sectional view showing a hard carbon film forming apparatus in an embodiment according to the eighth aspect of the present invention;

FIG. **8** illustrates the relation between a film forming time and a CH_4 flow rate in the formation of an intermediate layer having a graded structure with the apparatus of the embodiment according to the eighth aspect of the present invention;

FIG. **9** illustrates the relation between the film forming time and an ion current density in the formation of the intermediate layer having a graded structure with the apparatus of the embodiment according to the eighth aspect of the present invention;

FIG. **10** is a sectional view showing a diamond-like carbon film directly formed on a substrate according to an example of the present invention;

FIG. **11** is a sectional view showing an intermediate layer formed on a substrate and a diamond-like carbon film formed thereon according to another example of the present invention;

FIG. **12** is a schematic sectional view showing a conventional hard carbon film forming apparatus;

FIG. **13** illustrates the relations between partial pressures for supplying Ar gas and values of film hardness in a method of forming a hard carbon film according to the present invention; and

FIG. **14** illustrates the relation between a self-bias developed in a substrate and film hardness in the method of forming a hard carbon film according to the present invention.

DESCRIPTION OF THE PREFERRED EMBODIMENTS

FIG. **1** is a schematic sectional view showing an exemplary apparatus for forming a hard carbon film according to the present invention. Referring to FIG. **1**, a plasma generation chamber **4** is provided in a vacuum chamber **8**. An end of a waveguide **2** is mounted on the plasma generation chamber **4**, while microwave supply means **1** is provided on another end of the waveguide **2**. A microwave that is generated in the microwave supply means **1** passes through the waveguide **2** and a microwave inlet window **3**, to be guided into the plasma generation chamber **4**. The plasma generation chamber **4** is provided with a discharge gas inlet pipe **5** for introducing a discharge gas such as argon (Ar) gas into the plasma generation chamber **4**. Further, a plasma magnetic field generator **6** is provided around the plasma generation chamber **4**. A plasma of high density is formed in the plasma generation chamber **4** by the actions of a high-frequency magnetic field formed by the microwave and a magnetic field generated by the plasma magnetic field generator **6**.

A cylindrical substrate holder **12** is provided in the vacuum chamber **8**. This cylindrical substrate holder **12** is rotatable about a shaft (not shown) which is arranged perpendicularly to wall surfaces of the vacuum chamber **8**. A plurality of substrates **13** are mounted on a peripheral surface of the substrate holder **12** at regular intervals. According to this embodiment, **24** nickel (Ni) substrates **13** are mounted on the peripheral surface of the substrate holder **12**. A high-frequency power source **10** is connected to the substrate holder **12**.

A cylindrical shielding cover **14** of a metal is provided around the substrate holder **12** at a prescribed distance. This shielding cover **14** is connected to a ground electrode. This shielding cover **14** is adapted to prevent discharge across portions of the substrate holder **12** other than those intended for film formation and the vacuum chamber **8** caused by the RF voltage that is applied to the substrate holder **12** in formation of the films. The substrate holder **12** and the shielding cover **14** are so arranged that the distance therebetween is not more than the mean free path of gas molecules. The mean free path of the gas molecules is less than or equal to the mean distance that ions and electrons that are generated by some cause and accelerated by an electric field can travel with no collision. The distance between the substrate holder **12** and the shielding cover **14** is set to be not more than the mean free path of the gas molecules, so as to reduce the probability that ions and electrons will collide with the gas molecules, thereby preventing a chain progression of ionization.

The distance between the substrate holder **12** and the shielding cover **14** is preferably set to be not more than 1/10 of the mean free path of the gas molecules, in particular. According to this embodiment, the distance between the substrate holder and the shielding cover **14** is set at about 5 mm, which is not more than 1/10 of the mean free path of the gas molecules.

The shielding cover **14** has an opening **15**. The plasma is drawn from the plasma generation chamber **4** and passes through the opening **15**, to be emitted toward the respective substrate **13** mounted on the substrate holder **12** at a position at the opening **15**. The vacuum chamber **8** is provided therein with a reaction gas inlet pipe **16**. A forward end of the reaction gas inlet pipe **16** is located above the opening **15**. FIG. **2** is a plan view showing a portion around the forward end of the reaction gas inlet pipe **16**. Referring to FIG. **2**, the reaction gas inlet pipe **16** includes a gas inlet part **16*a*** for introducing CH_4 gas into the vacuum chamber **8** from the exterior, and a gas discharge part **16*b*** perpendicularly connected with the gas inlet part **16*a***. The gas discharge part **16*b*** is arranged perpendicularly to a direction A of rotation of the substrate holder **12**, to be positioned upstream

of the direction of rotation above the opening **15**. The gas discharge part **16***b* is provided with a plurality of holes **21** which are downwardly directed at an angle of about 45°. According to this embodiment, eight holes **21** are provided at spacing intervals that are gradually made narrower from the center toward both sides. Thus, the CH_4 gas which is introduced from the gas inlet part **16***a* is substantially uniformly discharged from the respective holes **21**.

An example for forming diamond-like carbon films serving as hard carbon films on nickel substrates through the apparatus shown in FIG. **1** is now described.

First, 24 Ni substrates **13** were mounted on the peripheral surface of the substrate holder **12** at regular intervals. Then, the vacuum chamber **8** was evacuated to 10^{-5} to 10^{-7} Torr, and the substrate holder **12** was rotated at a speed of about 10 rpm. Then, Ar gas was supplied from the discharge gas inlet pipe **5** of an ECR plasma generator at 5.7×10^{-4} Torr, while a microwave of 2.45 GHz frequency and 100 W power was supplied from the microwave supply means **1**, so that an Ar plasma formed in the plasma generation chamber **4** was emitted onto the surface of each substrate **13**. At the same time, an RF voltage of 13.56 MHz frequency was applied to the substrate holder **12** from the high-frequency power source **10**, so that a self-bias developed in each substrate **13** was −20 V. CH_4 gas was supplied from the reaction gas inlet pipe **16** at 1.3×10^{-3} Torr. The CH_4 gas supplied from the reaction gas inlet pipe **16** was decomposed by an action of the plasma so that carbon entered an ionic or neutral active state having high reactivity to be emitted onto the surface of each substrate **13**.

The aforementioned step was carried out for about 15 minutes, to form a diamond-like carbon film of 1200 Å in thickness on the surface of each substrate **13**. FIG. **10** is a sectional view showing a diamond-like carbon film formed on each substrate **13** in the aforementioned manner. Referring to FIG. **10**, a diamond-like carbon film **21** is formed on the substrate **13**.

FIG. **3** illustrates the relation between a film forming time and a substrate temperature in the aforementioned Example (hereinafter referred to as "Example 1"), in comparison to data of a comparative example 1 in which diamond-like carbon films were formed similarly to Example 1 except that the substrate holder was not rotated, and a comparative example 2 in which diamond-like carbon films were formed in an apparatus without a shielding cover and without rotation of a substrate holder. As understood from FIG. **3**, the substrate temperature was about 45° C. in Example 1 at a time 15 minutes after starting film formation, while the substrate temperatures at that same point in time in comparative examples 1 and 2 were about 60° C. and about 150° C. respectively. The substrate temperature was extremely increased in comparative example 2, conceivably because discharge was caused between the vacuum chamber and portions of the substrate holder other than those for forming the films. The substrate temperature in comparative example 1 was lower than that in comparative example 2, which shows that it is possible to reduce the substrate temperature by providing the shielding cover. The substrate temperature in Example 1 was lower than that in comparative example 1, conceivably because in Example 1, the portions heated by plasma discharge were successively moved as the substrate holder was rotated, to suppress the increase in substrate temperature. According to the present invention, it is possible to select the type of the substrates without consideration of heat resistance, since the increase of the substrate temperature can be suppressed.

The apparatus shown in FIG. **1** was employed to apply RF voltages to substrates so that self-biases developed in the substrates were −50 V while CH_4 gas was supplied from the reaction gas inlet pipe at partial pressures of 3.0×10^{-4} Torr, 1.0×10^{-3} Torr and 1.3×10^{-3} Torr respectively, for investigating the relations between the partial pressures and values of hardness of the resulting diamond-like carbon films as formed.

FIG. **13** illustrates the relations between the partial pressures for supplying Ar gas and the values of Vickers hardness of the films, which were measured on the basis of JIS G0202.

As shown in FIG. **13**, the values of hardness of the films were about 3000 Hv regardless of the partial pressures for supplying Ar gas. Further, substantially similar results were obtained also when the partial pressures for supplying CH_4 gas were changed. Thus, it is understood to be possible to form diamond-like carbon films having prescribed values of film hardness on substrates regardless of the partial pressures for supplying Ar gas and CH_4 gas.

Then, the Ar gas and the CH_4 gas were supplied at partial pressures of 5.7×10^{-4} Torr and 1.0×10^{-3} Torr respectively, while the output from the high-frequency power source was changed to vary the self-biases developed in the substrates. FIG. **14** illustrates the relation between the self-bias developed in each substrate and film hardness of the diamond-like carbon film as formed.

As shown in FIG. **14**, the film hardness was at a low value of about 500 Hv when the self-bias developed in each substrate was 0 V. The film hardness increased correspondingly with the absolute value of the self-bias voltage as it varied through the range of 0 V to −20 V. The film hardness was at a high value of about 3000 Hv when the self-bias was −20 V. This film hardness of about 3000 Hv substantially remained unchanged when the self-bias was reduced below −20 V. Thus, it is understood that it is possible to form diamond-like carbon films of about 3000 Hv in hardness on substrates by setting the RF voltage of the high-frequency power source so that the self-bias developed in each substrate is not more than −20 V, regardless of the partial pressures for supplying Ar gas and CH_4 gas.

A result similar to that shown in FIG. **14** was obtained also when the partial pressures for supplying Ar gas and CH_4 gas were varied in a range of 1.0×10^{-4} to 20.0×10^{-4} Torr.

Another embodiment, for forming intermediate layers on substrates and then forming diamond-like carbon films serving as hard carbon films on the intermediate layers, will now be described.

FIG. **11** is a sectional view showing an intermediate layer **22** formed on a substrate **13**, and a hard carbon film **21** formed on this intermediate layer **22**.

FIG. **4** is a schematic sectional view showing a hard carbon film forming apparatus according to this embodiment of the present invention. Referring to FIG. **4**, a shielding cover **44** is provided around a substrate holder **12** which is arranged in a vacuum chamber **8**. This shielding cover **44** is provided with first and second openings **45** and **43**. According to this embodiment, the first and second openings **45** and **43** are formed in substantially opposite positions. The first opening **45** is formed similarly to the opening **15** shown in FIG. **1**, so that a forward end of a reaction gas inlet pipe **16** is located above the first opening **45**, similarly to the apparatus shown in FIG. **1**.

An evaporation source **41** is provided under the second opening **43**, for evaporating material atoms for forming intermediate layers by an electron beam and emitting the same toward substrates **13**. An ion gun **42** is provided in the vicinity of the evaporation source **41**, for emitting ions of an

inert gas for supplying the material atoms evaporated from the evaporation source **41** with energy. According to this embodiment, the inert gas is Ar gas, and the intermediate layer forming means comprise the evaporation source **41** and the ion gun **42**. The evaporation source **41** and the ion gun **42** emit the material atoms for forming intermediate layers onto the substrates **13** through the second opening **43**.

Other structures of this embodiment are similar to those of the embodiment shown in FIG. **1**. Thus, elements corresponding to those in FIG. **1** are denoted by the same reference numerals, and a redundant description thereof is omitted.

Another inventive example will now be described, namely an example for forming intermediate layers from a single element, and then forming diamond-like carbon films on the intermediate layers.

Similarly to the above described Example 1, 24 Ni substrates **13** were mounted on a peripheral surface of the substrate holder **12** at regular intervals. The vacuum chamber **8** was evacuated to 10^{-5} to 10^{-7} Torr, and the substrate holder **12** was rotated at a speed of about 10 rpm. Then, the ion gun **42** was supplied with Ar gas, so that Ar ions were ejected and emitted onto the surface of each substrate **13**. At this time, the Ar ions were set at an acceleration voltage of 400 eV and ion current density of 0.3 mA/cm^2. Simultaneously with the emission of the Ar ions, the evaporation source **41** was driven to evaporate Ru atoms, for emitting the same onto the surface of each substrate **13**. The Ru evaporation rate was set to be 420 Å /min. in terms of a film forming rate on each substrate **13**.

The aforementioned step was carried out for about 5 minutes, to form an intermediate layer of Ru having a thickness of 200 Å on the surface of each substrate **13**.

Then, the emission of Ru atoms from the evaporation source **41** and the emission of Ar ions from the ion gun **42** were stopped, and thereafter Ar gas was supplied from a discharge gas inlet pipe **5** of an ECR plasma generator at 5.7×10^{-4} Torr while a microwave of 2.45 GHz frequency and 100 W power was supplied from microwave supply means **1**, to emit an Ar plasma formed in a plasma generation chamber **4** onto the surface of each substrate **13**. At the same time, an RF voltage of 13.56 MHz frequency was applied from a high-frequency power source **10** to the substrate holder **12** and CH_4 was supplied from a reaction gas inlet pipe **16** at 1.3×10^{-3} Torr, so that a self-bias of –20 V developed in each substrate **13**.

The aforementioned step was carried out for about 15 minutes, to form a diamond-like carbon film of 1200 Å in thickness on the intermediate layer that had been formed on each substrate **13**.

As a result of the aforementioned two steps, a layered thin film including the intermediate layer **22** of Ru formed on the surface of each substrate **13** and the diamond-like carbon film **21** formed on the intermediate layer **22**, was obtained as shown in FIG. **11**. Due to such formation of the intermediate layer **22**, it is possible to relax stress in the diamond-like carbon film **21**, thereby improving the adhesion between the substrate **13** and the diamond-like carbon film **21**. The stress in the diamond-like carbon film **21** can be relaxed conceivably because it is possible to relax thermal stress caused by a difference in thermal expansion coefficients between the substrate **13** and the diamond-like carbon film **21**, due to the presence of the intermediate layer **22**.

Another inventive example will now be described, namely an example for forming mixed layers of material atoms and carbon as intermediate layers and then forming diamond-like carbon films thereon. In this example, an apparatus similar to that shown in FIG. **4** was employed.

Similarly to the above described Example 1, 24 Ni substrates **13** were mounted on the peripheral surface of the substrate holder **12** at regular intervals. The vacuum chamber **8** was evacuated to 10^{-5} to 10^{-7} Torr, and the substrate holder **12** was rotated at a speed of about 10 rpm.

Then, Ar gas was supplied from the discharge gas inlet pipe **5** of the ECR plasma generator at 5.7×10^{-4} Torr, while a microwave of 2.45 GHz frequency and 100 W power was supplied from the microwave supply means **1** to emit an Ar plasma formed in the plasma generation chamber **4** onto the surface of each substrate **13**. At the same time, an RF voltage of 13.56 MHz frequency was applied to the substrate holder **12** from the high-frequency power source **10** while CH_4 gas was supplied from the reaction gas inlet pipe **16**, so that a self-bias of –20 V was developed in each substrate **13**. The supply quantity of the CH_4 gas was gradually increased with time as shown in FIG. **5**, to be 100 sccm, i.e., 1.3×10^{-3} Torr, after a lapse of 5 minutes.

Simultaneously with the aforementioned film formation by the ECR plasma generator, Ar ions were emitted from the ion gun **42** and Ru atoms were emitted from the evaporation source **41** to the surface of each substrate **13**. At this time, the Ar ions were set at an acceleration voltage of 400 eV and ion current density of 0.3 mA/cm^2. Further, the Ru evaporation rate was gradually reduced with time from 420 Å/min. in terms of a film forming rate on each substrate **13** to reach 0 Å/min. after a lapse of 5 minutes, as shown in FIG. **6**. The emission of the Ar ions from the ion gun **42** was stopped when the Ru evaporation rate reached 0 Å/min., i.e., after a lapse of 5 minutes

As hereinabove described, carbon film formation by plasma CVD and Ru evaporation were simultaneously carried out in the first and second openings **45** and **43** respectively, to form an intermediate layer containing Ru and C in a mixed state. According to this Example, the aforementioned step was carried out for about 5 minutes, to form a mixed layer of Ru and C having a total thickness of 200 Å on the surface of each substrate **13**. As shown in FIGS. **5** and **6**, the evaporation volume of Ru was reduced and the amount of carbon film formation was increased with time. Thus, the intermediate layer had a graded structure or composition gradient such that the Ru content was gradually reduced and the C content was gradually increased as the distance from the surface of each substrate **13**, increased.

Then, a diamond-like carbon film was formed on each intermediate layer. CH_4 gas was supplied from the reaction gas inlet pipe **16** at a constant partial pressure of 1.3×10^{-3} Torr, to continuously carry out film formation by the ECR plasma generator in the aforementioned step. This step was carried out for about 15 minutes, to form a diamond-like carbon film of 1200 Å in thickness on the intermediate layer that had been formed on each substrate **13**.

As a result, a layered film including an intermediate layer consisting of Ru and C having a graded structure and a diamond-like carbon film was formed on each substrate **13**. Such an intermediate layer having a graded structure can further improve the adhesion between the substrate and the diamond-like carbon film as compared with the aforementioned intermediate layer consisting of a single element.

An evaluation test was conducted to evaluate the adhesion of diamond-like carbon films formed by the apparatus of the aforementioned embodiment. Samples were prepared by directly forming diamond-like carbon films on Ni substrates (Example 1), by forming intermediate layers consisting of

Ru on Ni substrates and then forming diamond-like carbon films on the intermediate layers (Example 2), by forming intermediate layers of mixed layers consisting of Ru and C on Ni substrates and then forming diamond-like carbon films on the intermediate layers (Example 3), and by employing an Si evaporation source for forming intermediate layers consisting of Si on Ni substrates and then forming diamond-like carbon films on the intermediate layers (Example 4). Adhesion was evaluated by an indentation test with constant loads (1 kg) employing Vickers indenters. 50 samples were prepared for each Example, and the numbers of those causing separation of the diamond-like carbon films formed on the Ni substrates were counted. Table 1 shows the results.

TABLE 1

	Example 1	Example 2	Example 3	Example 4
Number of Samples Causing Separation	43	7	0	16

As obvious from Table 1, the numbers of samples causing separation were reduced in Examples 2, 3 and 4, which were provided with the intermediate layers, as compared with Example 1, which was not provided with an intermediate layer. Thus, it is understood that it is possible to improve the adhesion of the diamond-like carbon films by providing the intermediate layers. Particularly from Example 3, it is clearly understood that it is possible to remarkably improve the adhesion of the diamond-like carbon films by forming the intermediate layers of Ru and C having graded structures.

Comparing Examples 2 and 4 with each other, it is understood that Ru is superior to Si as material atoms for forming intermediate layers with respect to Ni substrates.

FIG. **7** is a schematic sectional view showing a hard carbon film forming apparatus according to still another embodiment of the present invention. Referring to FIG. **7**, a shielding cover **44** is provided around a substrate holder **12** which is arranged in a vacuum chamber **8**. The shielding cover **44** has a first opening **45** similar to the opening **15** shown in FIG. **1**, so that a forward end of a reaction gas inlet pipe **16** is located above the first opening **45**, similarly to the apparatus shown in FIG. **1**.

A target **46** of material atoms for forming intermediate layers is provided under a second opening **43** of the shielding cover **44**. Further, an ion gun **47** is provided in the vicinity of the target **46**, for emitting ions of an inert gas to the target **46** thereby sputtering the target **46**. According to this embodiment, the inert gas is Ar gas and the intermediate layer forming means comprises the target **46** and the ion gun **47**, while thin-film heads **48** are mounted on the substrate holder **12** as substrates. The target **46** and the ion gun **47** emit the material atoms for forming intermediate layers onto the thin-film heads **48** through the second opening **43**.

The ions from the ion gun **47** are applied not only to the target **46** but also to the thin-film head **48**.

Other structures of this embodiment are similar to those of the embodiment shown in FIG. **1**. Thus, elements corresponding to those in FIG. **1** are denoted by the same reference numerals, and a redundant description is omitted.

A further inventive example will now be described, namely an example for forming intermediate layers from a single element, and then forming diamond-like carbon films thereon.

Similarly to the above described Example 1, 24 thin-film heads **48** were mounted on a peripheral surface of the substrate holder **12** at regular intervals. The vacuum chamber **8** was evacuated to 10^{-5} to 10^{-7} Torr, and the substrate holder **12** was rotated at a speed of about 10 rpm. Then, Ar gas was supplied to the ion gun **47**, so that Ar ions were ejected and emitted onto a surface of the target **46** consisting of Si. At this time, the Ar ions were set at an acceleration voltage of 900 eV and ion current density of 0.3 mA/cm^2.

The aforementioned step was carried out for about 2 minutes, to form an intermediate layer of Si having a thickness of 60 Å on the surface of each thin-film head **48**.

Then, the emission of the Ar ions from the ion gun **47** was stopped and Ar gas was supplied from a discharge gas inlet pipe **5** of an ECR plasma generator at 5.7×10^{-4} Torr, while a microwave of 2.45 GHz frequency and 100 W power was supplied from microwave supply means **1**, to emit an Ar plasma formed in a plasma generation chamber **4** onto the surface of each thin-film head **48**. At the same time, an RF voltage of 13.56 MHz frequency was applied to the substrate holder **12** from a high-frequency power source **10** and CH_4 gas was supplied from a reaction gas inlet pipe **16** at 1.3×10^{-3} Torr, so that a self-bias of –20 V was developed in each thin-film head **48**.

The aforementioned step was carried out for about 2.5 minutes, to form a diamond-like carbon film of 200 Å in thickness on the intermediate layer that had been formed on each thin-film head **48**.

As a result of the aforementioned two steps, a layered thin film was formed on the surface of each thin-film head **48**, including the intermediate layer of Si and the diamond-like carbon film formed thereon. Due to such formation of an intermediate layer, it is possible to relax stress in a diamond-like carbon film, thereby improving the adhesion between a substrate and the diamond-like carbon film. The stress in the diamond-like carbon film can be relaxed conceivably because it is possible to relax the thermal stress caused by the difference in thermal expansion coefficients between the substrate and the diamond-like carbon film, due to the presence of the intermediate layer. Further, the intermediate layer is formed with higher adhesion since the Ar ions are applied not only to the target but also to each thin-film head during formation of the intermediate layer.

Another inventive example will now be described, namely an example for forming mixed layers of material atoms and carbon as intermediate layers and forming diamond-like carbon films thereon. Also in this example, an apparatus similar to that shown in FIG. **7** was employed.

First, 24 thin-film heads **48** were mounted on the peripheral surface of the substrate holder **12** at regular intervals. The vacuum chamber **8** was evacuated to 10^{-5} to 10^{-7} Torr, and the substrate holder **12** was rotated at a speed of about 10 rpm.

Then, Ar gas was supplied from the discharge gas inlet pipe **5** of the ECR plasma generator at 5.7×10^{-4} Torr while a microwave of 2.45 GHz frequency and 100 W power was supplied from the microwave supply means **1**, to emit an Ar plasma formed in the plasma generation chamber **4** to the surface of each thin-film head **48**. At the same time, an RF voltage of 13.56 MHZ frequency was applied from the high-frequency power source **10** to the substrate holder **12** and CH_4 gas was supplied from the reaction gas inlet pipe **16**, so that a self-bias of –20 V was developed in each thin-film head **48**. At this time, the supply quantity of the CH_4 gas was gradually increased with time to reach 100 sccm, i.e., 1.3×10^{-3} Torr, after a lapse of 3 minutes, as shown in FIG. **8**.

Simultaneously, with the film formation by the ECR plasma generator, Ar ions were emitted onto the surface of

the target **46** from the ion gun **47**. At this time, the Ar ions were set at an acceleration voltage of 900 eV and ion current density of 0.3 mA/cm^2. The ion current density was gradually reduced with time to reach 0 mA/cm^2 after a lapse of 3 minutes, as shown in FIG. **9**.

As hereinabove described, carbon film formation by plasma CVD and Si sputtering were simultaneously carried out in the first and second openings **45** and **43** respectively, to form a mixed layer of Si and C as an intermediate layer. According to this embodiment, the aforementioned step was carried out for about 3 minutes, to form a mixed layer of Si and C having a total thickness of 60 Å on the surface of each thin-film head **48**. As shown in FIGS. **8** and **9**, the quantity of Si was reduced and the amount of carbon film formation was increased over time. Thus, this intermediate layer had a graded structure or composition gradient such that the Si content was gradually reduced and the C content was gradually increased as the distance from the surface of each thin-film head **48** increased.

Then, a diamond-like carbon film was formed on each intermediate layer. CH_4 gas was supplied from the reaction gas inlet pipe **16** at a constant partial pressure of 1.3×10^{-3} Torr, to continuously carry out film formation by the ECR plasma generator in the aforementioned step. This step was carried out for about 2.5 minutes, to form a diamond-like carbon film of 200 Å in thickness on the intermediate layer of each thin-film head **48**.

As a result, a layered film including the intermediate layer of Si and C having a graded structure and the diamond-like carbon film was formed on each substrate. Such an intermediate layer having a graded composition or structure can further improve the adhesion between the substrate and the diamond-like carbon film as compared with the aforementioned intermediate layer consisting of a single element.

A further inventive example will now be described, namely an example for forming intermediate layers mainly composed of Si on Ni substrates and then forming diamond-like carbon films on the intermediate layers according to the second aspect of the present invention through the apparatus shown in FIG. **7**.

The vacuum chamber **8** was evacuated to 10^{-5} to 10^{-7} Torr, and the substrate holder **12** was rotated at a speed of about 10 rpm. 24 Ni substrates were mounted on the substrate holder **12** at regular intervals. The ion gun **47** was supplied with Ar gas, to emit Ar ions onto the surface of the target **46**. At this time, the Ar ions were set at an acceleration voltage of 900 eV and ion current density of 0.3 mA/cm^2, while the sputtered Si was evaporated on each substrate at an evaporation rate of 30 Å/min.

The time for the Si sputtering step was changed to vary the thicknesses of the Si intermediate layers formed on the Ni substrates to 30 Å, 50 Å, 100 Å and 500 Å (Example 5).

Diamond-like carbon films of 1200 Å in thickness were formed similarly to Example 1 on the intermediate layers having different thicknesses, which were obtained in the aforementioned manner.

An evaluation test for adhesion was carried out on the diamond-like carbon films obtained in the aforementioned manner. The adhesion evaluation test was carried out similarly to that for Examples 1 to 4 described above.

Table 2 shows the results.

TABLE 2

	Example 1	Example 5 30Å	50Å	100Å	500Å
Number of Samples Causing Separation	43	16	0	0	0

As clearly understood from Table 2, the diamond-like carbon films were generally separated when the intermediate layers were less than 50 Å in thickness, while no such separation was recognized when the film thicknesses exceeded 50 Å.

It is conceivable that a sufficient range for the thickness of the intermediate layer is up to about 5000 Å when the hard-carbon-film-coated substrate according to the present invention is applied to an outer blade of an electric shaver. The adhesion is not further improved even if the thickness exceeds 5000 Å. Therefore, it is conceivable that a thickness of about 4000 Å is sufficient for an intermediate layer that is mainly composed of Si in the present invention. It is also conceivable that a thickness of about 5000 Å is sufficient for the diamond-like carbon film. If the thickness of the diamond-like carbon film exceeds 5000 Å, then internal stress could easily be caused and deform the substrate as a result.

Another inventive example will now be described, namely an example for forming mixed layers of Si and carbon as intermediate layers.

Mixed layers of Si and carbon were formed similarly to the aforementioned Example for forming mixed layers of Si and C as intermediate layers. Samples were prepared by varying the thicknesses of the intermediate layers to 30 Å, 50 Å, 100 Å and 500 Å (Example 6). Further, diamond-like carbon films were formed on the intermediate layers to a thickness of 1200 Å. Adhesion of the diamond-like carbon films was evaluated in the samples obtained in the aforementioned manner, similarly to the above.

Table 3 shows the results.

TABLE 3

	Example 1	Example 6 30Å	50Å	100Å	500Å
Number of Samples Causing Separation	43	14	0	0	0

As clearly understood from Table 3, the diamond-like carbon films were generally separated when the intermediate layers of SiC were less than 50 Å in thickness, while no such separation was recognized when the film thicknesses exceeded 50 Å. Thus, the intermediate layer is preferably at least 50 Å in thickness, also when the intermediate layer is prepared from SiC.

Then, nitrogen gas was introduced as a reaction gas containing nitrogen from the gas inlet pipe **16** shown in FIG. **7** into the vacuum chamber **8**, to form mixed layers of Si and nitrogen as intermediate layers. The nitrogen gas was supplied at a partial pressure of 1.8×10^{-4} Torr. Diamond-like carbon films were formed on the intermediate layers, under conditions similar to those in Example 6. Consequently, results similar to those shown in Table 3 were obtained.

Further, mixed layers of Si and oxygen were formed as intermediate layers, and then diamond-like carbon films

were formed on these intermediate layers. A reaction gas containing oxygen was prepared from oxygen gas, and supplied at a partial pressure of 1.8×10^{-4} Torr. Diamond-like carbon films were formed on the intermediate layers, under conditions similar to those in Example 6. Consequently, results similar to those shown in Table 3 were obtained.

Further, Ge was employed in place of Si as an intermediate layer. The evaluation of adhesion was performed similarly to Examples 5 and 6. Consequently, results similar to those shown in Tables 2 and 3 were obtained.

An example according to the third aspect of the present invention will now be described. According to this example, carbon thin films were formed as intermediate layers. An apparatus similar to that shown in FIG. **7** was employed for forming the carbon thin films, with a carbon target. Ar ions were set at an acceleration voltage of 900 eV and ion current density of 0.3 mA/cm^2. The times for forming the carbon thin films were changed to vary the thicknesses of the carbon thin films serving as intermediate layers to 30 Å, 50 Å, 100 Å and 500 Å (Example 7). Diamond-like carbon films were formed on the intermediate layers having different thicknesses obtained in the aforementioned manner, similarly to the above Example 5, and then were subjected to an adhesion evaluation test. Table 4 shows the results.

TABLE 4

		Example 7			
	Example 1	30Å	50Å	100Å	500Å
Number of Samples Causing Separation	43	15	0	0	0

As clearly understood from Table 4, the diamond-like carbon films were generally separated when the intermediate layers were less than 50 Å in thickness, while no such separation was recognized when the film thicknesses exceeded 50 Å. Thus, the intermediate layer is preferably at least 50 Å in thickness, also when the layer is formed by a carbon thin film. Further, the intermediate layer is preferably not more than 4000 Å in thickness when the hard-carbon-film-coated substrate is used for an outer blade of an electric shaver, while it is preferably not more than 8000 Å in thickness when the hard-carbon-film-coated substrate is used for an inner blade, for reasons similar to those discussed above regarding the example according to the second aspect of the present invention.

In the present invention, an intermediate layer may be formed by plasma CVD. In this case, a gas containing material atoms for forming an intermediate layer is supplied into a vacuum chamber **8** from a reaction gas inlet pipe **16** to form a plasma and emit the plasma toward a substrate thereby forming the intermediate layer on the substrate.

While each of the above embodiments and examples has been described with reference to an ECR plasma generator serving as plasma generation means, the present invention is not restricted to this but another plasma CVD apparatus such as a high-frequency plasma CVD apparatus or a DC plasma CVD apparatus is also employable.

The invention is also directed to an apparatus for forming a hard carbon film on a substrate, comprising: a vacuum chamber; a substrate holder being rotatably provided in said vacuum chamber; a shielding cover, partially provided with an opening, being arranged to enclose a peripheral surface of said substrate holder; plasma generation means for generating a plasma in said vacuum chamber and emitting said plasma toward said substrate through said opening; reaction gas inlet means for supplying a reaction gas containing carbon into said plasma being generated from said plasma generation means; and a high-frequency power source for applying a high-frequency voltage to said substrate holder so that a self-bias being developed in said substrate goes negative.

The invention is further directed to an apparatus for forming an intermediate layer on a substrate and forming a hard carbon film on said intermediate layer, comprising: a vacuum chamber; a substrate holder being rotatably provided in said vacuum chamber; a shielding cover, partially provided with first and second openings, being arranged to enclose a peripheral surface of said substrate holder; plasma generation means for generating a plasma in said vacuum chamber and emitting said plasma toward said substrate through said first opening; reaction gas inlet means for supplying a reaction gas containing carbon into said plasma being generated from said plasma generation means; a high-frequency power source for applying a high-frequency voltage to said substrate holder so that a self-bias being developed in said substrate goes negative; and intermediate layer forming means being provided in said vacuum chamber for emitting material atoms for forming said intermediate layer toward said substrate through said second opening.

The intermediate layer forming means may comprise: an evaporation source being provided in said vacuum chamber for emitting said material atoms for forming said intermediate layer toward said substrate through said second opening, and an ion gun for emitting ions of an inert gas toward said substrate through said second opening simultaneously with said emission of said material atoms from said evaporation source. Alternatively, the intermediate layer forming means may comprise: a target, consisting of said material atoms for forming said intermediate layer, being provided in said vacuum chamber for sputtering said material atoms toward said substrate through said second opening, and an ion gun for emitting ions of an inert gas toward said target for sputtering said target.

The plasma generation means may be an electron cyclotron resonance plasma CVD apparatus. The shielding cover may be separated from said peripheral surface of said substrate holder by a distance of not more than a mean free path of gas molecules. Especially, the shielding cover may be separated from said peripheral surface of said substrate holder by a distance of not more than 1/10 of a mean free path of gas molecules. The shielding cover may be maintained at a prescribed potential. Alternatively, the shielding cover may be grounded.

The material atoms for forming said intermediate layer may be those of Si, Ru, carbon or Ge, or a mixture of Si, Ru, carbon or Ge and at least one of carbon, nitrogen and oxygen. The substrate may consist of a metal or an alloy being mainly composed of Ni or Al, or stainless steel. The self-bias being developed in said substrate is –20 V, for example.

Although the present invention has been described and illustrated in detail, it is clearly understood that the same is by way of illustration and example only and is not to be taken by way of limitation, the spirit and scope of the present invention being limited only by the terms of the appended claims.

What is claimed is:

1. A hard-carbon-film coated substrate comprising:

a substrate that consists of stainless steel or of a metal or alloy at least mainly composed of Ni or Al;

an intermediate layer arranged on said substrate that comprises Ru and at least one element selected from carbon, nitrogen and oxygen and that has a compositional gradient across its thickness; and

a predominantly amorphous hard carbon film arranged on said intermediate layer;

wherein said compositional gradient comprises a predominant proportion of Ru at a side of said intermediate layer adjacent said substrate and a predominant proportion of said at least one element selected from carbon, nitrogen and oxygen at a side of said intermediate layer adjacent said hard carbon film.

2. The coated substrate of claim **1**, wherein said intermediate layer is mainly composed of Ru.

3. The substrate of claim **1**, wherein said intermediate layer consists of Ru and said at least one element selected from carbon, nitrogen and oxygen.

4. The coated substrate of claim **1**, wherein said hard carbon film is a film of diamond-like carbon.

5. The coated substrate of claim **1**, wherein said hard carbon film has a Vickers hardness of about 3000.

6. The coated substrate of claim **1**, wherein said intermediate layer provides an improved adhesion of said hard carbon film through said intermediate layer onto said substrate as compared to an adhesion of said hard carbon film directly onto said substrate.

7. The coated substrate of claim **1**, wherein said intermediate layer has a thickness of 50 Å to 8000 Å.

8. The coated substrate of claim **1**, wherein said intermediate layer has a thickness of from 50 Å to 4000 Å.

9. A hard-carbon-film coated substrate comprising:

a substrate that consists of stainless steel or of a metal or alloy at least mainly composed of Ni or Al;

an intermediate layer that is arranged directly on said substrate and in contact therewith, and that comprises Si and at least one element selected from carbon, nitrogen and oxygen and that has a compositional gradient extending entirely across its thickness; and

a predominantly amorphous hard carbon film arranged on said intermediate layer;

wherein said compositional gradient comprises a predominant proportion of Si at a side of said intermediate layer adjacent said substrate and a predominant proportion of said at least one element selected from carbon, nitrogen and oxygen at a side of said intermediate layer adjacent said hard carbon film.

10. The coated substrate of claim **9**, wherein said intermediate layer is mainly composed of Si.

11. The coated substrate of claim **9**, wherein said intermediate layer consists of Si and said at least one element selected from carbon, nitrogen and oxygen.

12. The coated substrate of claim **9**, wherein said hard carbon film is a film of diamond-like carbon.

13. The coated substrate of claim **9**, wherein said hard carbon film has a Vickers hardness of about 3000.

14. The coated substrate of claim **9**, wherein said intermediate layer provides an improved adhesion of said hard carbon film through said intermediate layer onto said substrate as compared to an adhesion of said hard carbon film directly onto said substrate.

15. The coated substrate of claim **9**, wherein said intermediate layer has a thickness of from 50 Å to 8000 Å.

16. The coated substrate of claim **9**, wherein said intermediate layer has a thickness of from 50 Å to 4000 .

17. A hard-carbon-film coated substrate comprising:

a substrate that consists of stainless steel or of a metal or alloy at least mainly composed of Ni or Al;

an intermediate layer arranged on said substrate that comprises Ge and at least one element selected from carbon, nitrogen and oxygen and that has a compositional gradient across its thickness; and

a predominantly amorphous hard carbon film arranged on said intermediate layer;

wherein said compositional gradient comprises a predominant proportion of Ge at a side of said intermediate layer adjacent said substrate and a predominant proportion of said at least one element selected from carbon, nitrogen and oxygen at a side of said intermediate layer adjacent said hard carbon film.

18. The coated substrate of claim **17**, wherein said intermediate layer is mainly composed of Ge.

19. The coated substrate of claim **17**, wherein said intermediate layer consists of Ge and said at least one element selected from carbon, nitrogen and oxygen.

20. The coated substrate of claim **17**, wherein said hard carbon film is a film of diamond-like carbon.

21. The coated substrate of claim **17**, wherein said hard carbon film has a Vickers hardness of about 3000.

22. The coated substrate of claim **17**, wherein said intermediate layer provides an improved adhesion of said hard carbon film through said intermediate layer onto said substrate as compared to an adhesion of said hard carbon film directly onto said substrate.

23. The coated substrate of claim **17**, wherein said intermediate layer has a thickness of from 50 Å to 8000 Å.

24. The coated substrate of claim **17**, wherein said intermediate layer has a thickness of from 50 Å to 4000 Å.

25. A hard-carbon-film coated substrate comprising:

a substrate consisting of a metal or an alloy mainly composed of Ni or Al, or stainless steel,

an intermediate layer mainly composed of carbon arranged directly on and in contact with said substrate; and

a hard carbon film arranged on said intermediate layer.

26. The coated substrate of claim **25**, wherein said intermediate layer has a thickness of from 50 Å to 8000 Å.

27. The coated substrate of claim **25**, wherein said intermediate layer has a thickness of from 50 Å to 4000 Å.

28. The coated substrate of claim **25**, wherein said hard carbon film is a film of diamond-like carbon.

29. The coated substrate of claim **25**, wherein said intermediate layer provides an improved adhesion of said hard carbon film through said intermediate layer onto said substrate as compared to an adhesion of said hard carbon film directly onto said substrate.

* * * * *

UNITED STATES PATENT AND TRADEMARK OFFICE

CERTIFICATE OF CORRECTION

PATENT NO. : 5,629,086
DATED : May 13, 1997
INVENTOR(S) : Hirano et al.

It is certified that error appears in the above-indentified patent and that said Letters Patent is hereby corrected as shown below:

On the title page under [56] FOREIGN PATENT DOCUMENTS:
please add: --4-318175 11/1992 Japan
4-329879 11/1992 Japan
2-225672 9/1990 Japan
3-175620 7/1991 Japan
1-317197 12/1989 Japan
0503822 9/1992 Europe--.

Column 9, line 16, replace "$5.7x10^{x4}$" by --$5.7x10^{-4}$--.

Signed and Sealed this

Second Day of September, 1997

Attest:

BRUCE LEHMAN

Attesting Officer

Commissioner of Patents and Trademarks

Exhibit B

US006066399A

United States Patent [19]

Hirano et al.

[11] **Patent Number: 6,066,399**

[45] **Date of Patent: May 23, 2000**

[54] **HARD CARBON THIN FILM AND METHOD OF FORMING THE SAME**

[75] Inventors: **Hitoshi Hirano**, Nishinomiya; **Yoichi Domoto**, Ikoma; **Keiichi Kuramoto**, Kadoma, all of Japan

[73] Assignee: **Sanyo Electric Co., Ltd.**, Moriguchi, Japan

[21] Appl. No.: **09/045,163**

[22] Filed: **Mar. 19, 1998**

[30] **Foreign Application Priority Data**

Mar. 19, 1997 [JP] Japan 9-066125
Mar. 19, 1997 [JP] Japan 9-066126
Sep. 25, 1997 [JP] Japan 9-259833

[51] **Int. Cl.**[7] **B32B 9/06**; C23C 16/00

[52] **U.S. Cl.** **428/408**; 428/212; 428/697; 428/698; 428/699; 428/701; 428/702; 427/249

[58] **Field of Search** 428/212, 408, 428/697, 699, 701, 702; 427/249

[56] **References Cited**

U.S. PATENT DOCUMENTS

4,647,494	3/1987	Meyerson et al.	428/408
4,777,090	10/1988	Ovshinsky et al.	428/408
4,877,677	10/1989	Hirochi et al.	428/408
5,173,089	12/1992	Tanabe et al.	51/293
5,237,967	8/1993	Willermet et al. .	
5,368,937	11/1994	Itoh	428/408

FOREIGN PATENT DOCUMENTS

1317197 12/1989 Japan .

Primary Examiner—Archene Turner
Attorney, Agent, or Firm—W. F. Fasse; W. G. Fasse

[57] **ABSTRACT**

A hard carbon thin film formed on a substrate has a graded structure in which a ratio of sp^2 to sp^3 carbon-carbon bonding in the thin film decreases in its thickness direction from a thin film/substrate interface toward a surface of the thin film.

13 Claims, 15 Drawing Sheets

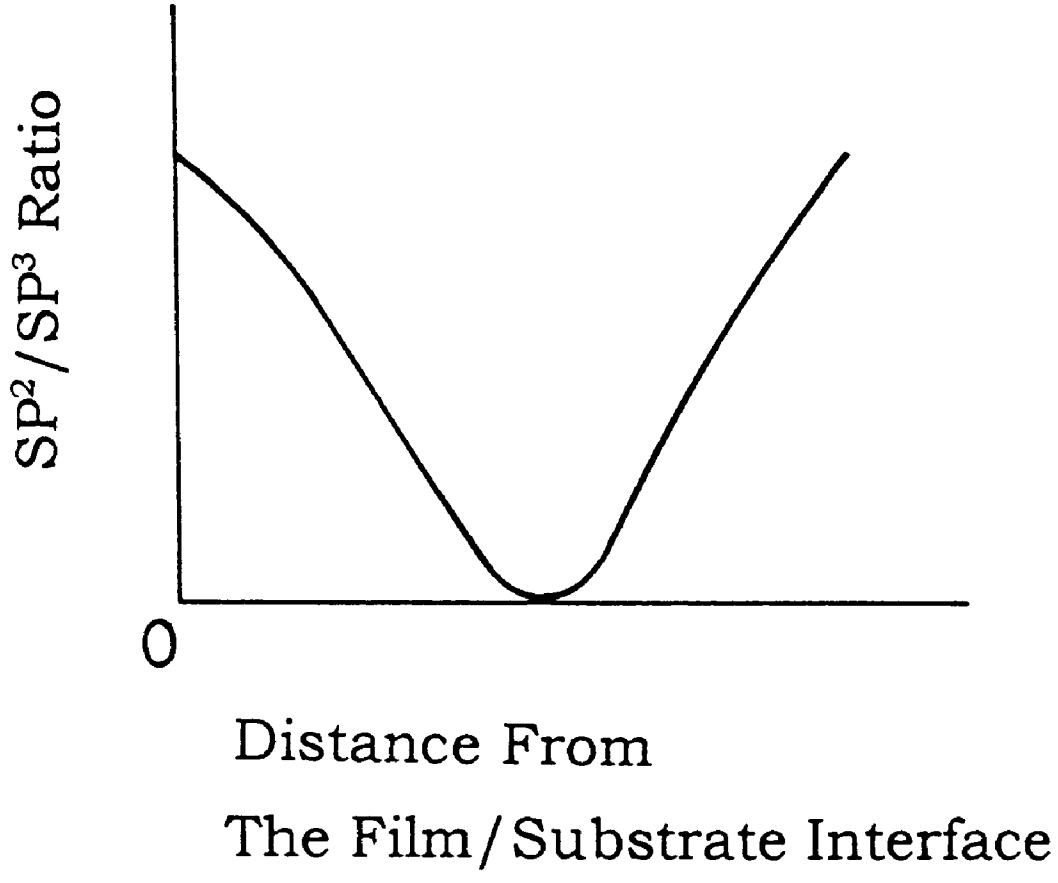

FIG. 1

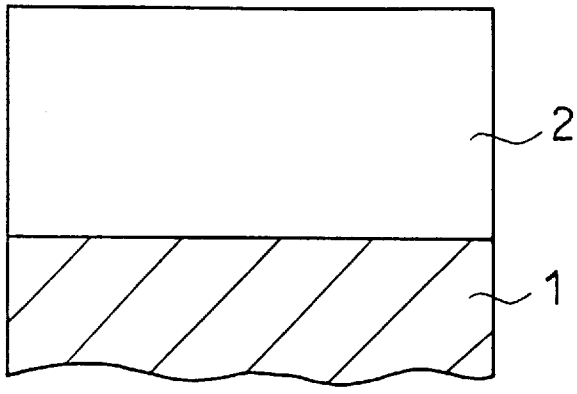
2
1

FIG. 2

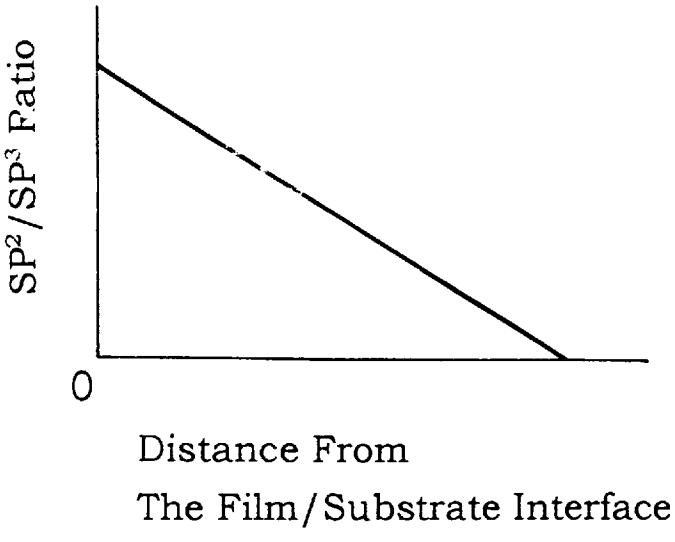
SP^2/SP^3 Ratio
0
Distance From
The Film/Substrate Interface

FIG. 3

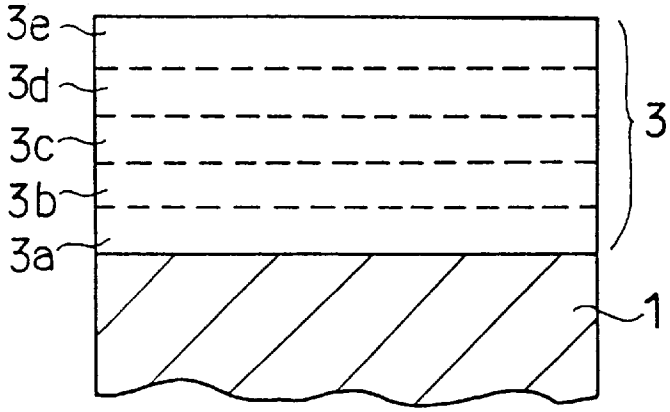
3e
3d
3c
3b
3a
3
1

FIG. 4

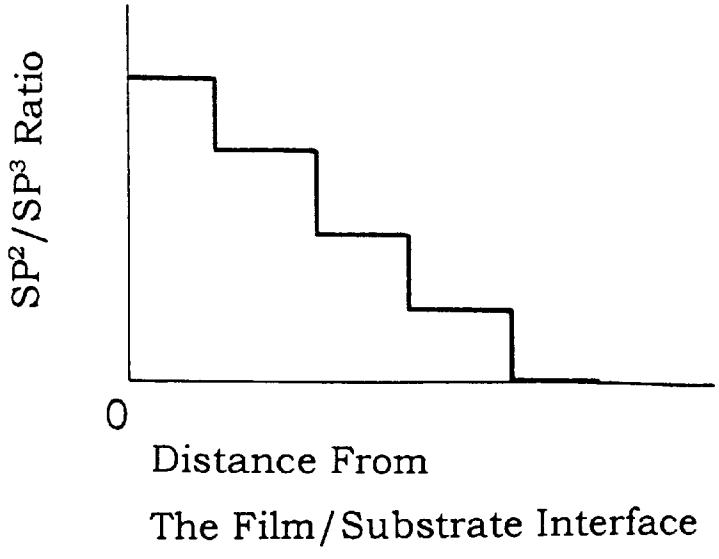
SP²/SP³ Ratio
0
Distance From
The Film/Substrate Interface

FIG. 5

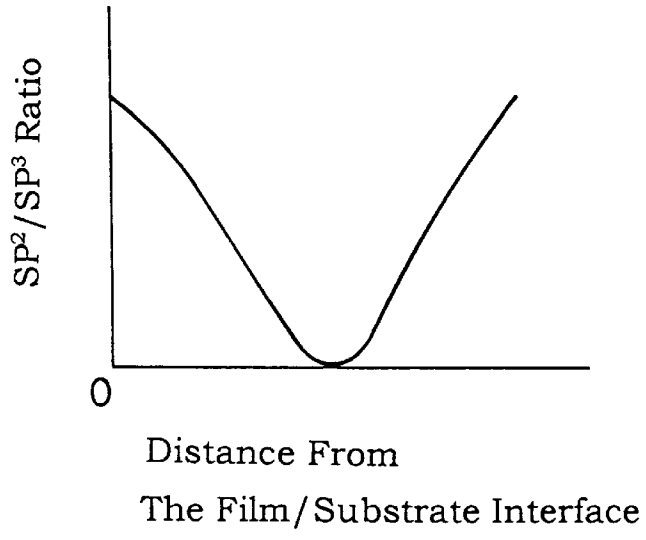
SP^2/SP^3 Ratio
0
Distance From
The Film/Substrate Interface

FIG. 6

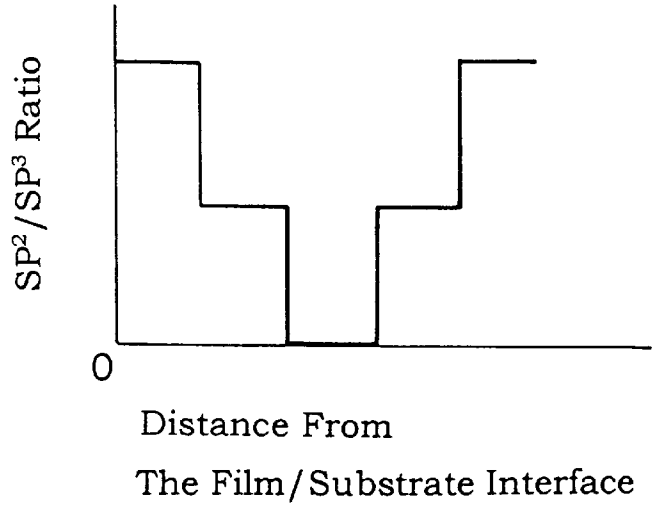
SP^2/SP^3 Ratio
0
Distance From
The Film/Substrate Interface

FIG. 7

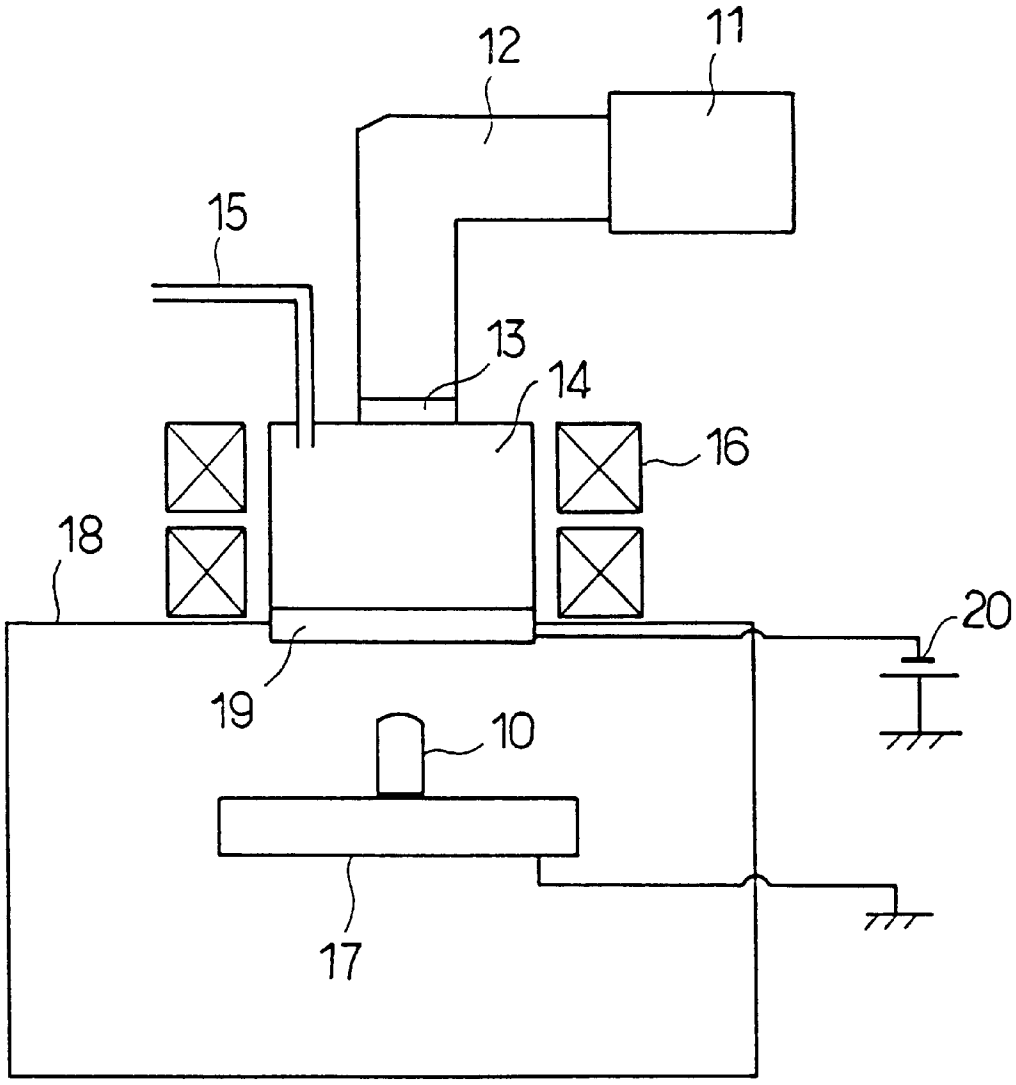

FIG. 8

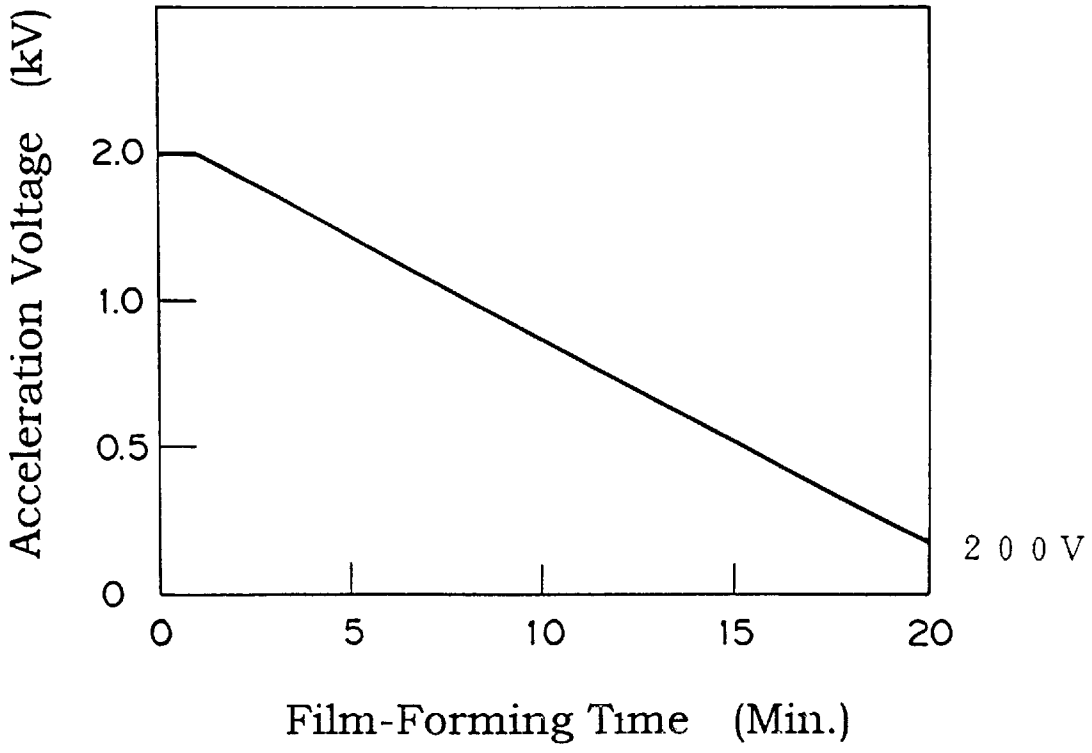
Acceleration Voltage (kV)
2.0
1.0
0.5
0
0
5
10
15
20
200V
Film-Forming Time (Min.)

FIG. 9

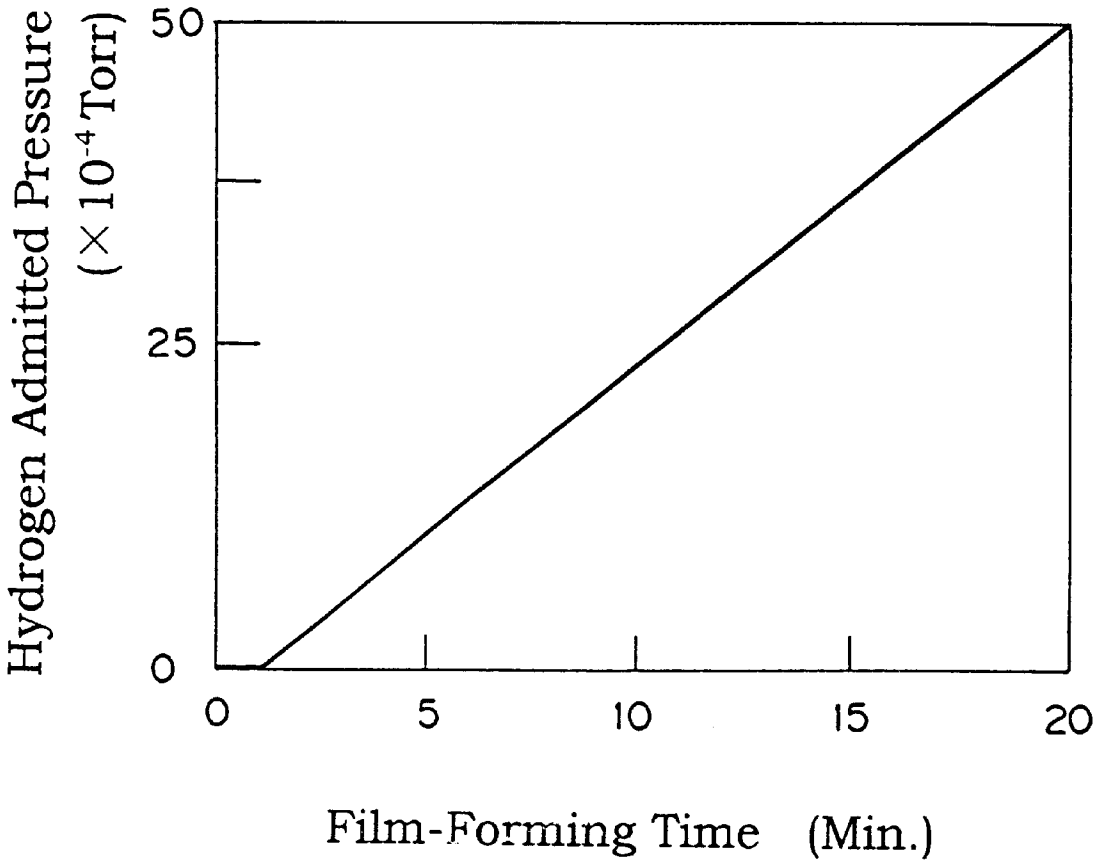
Hydrogen Admitted Pressure
(×10⁻⁴ Torr)
50
25
0
0
5
10
15
20
Film-Forming Time (Min.)

FIG. 10

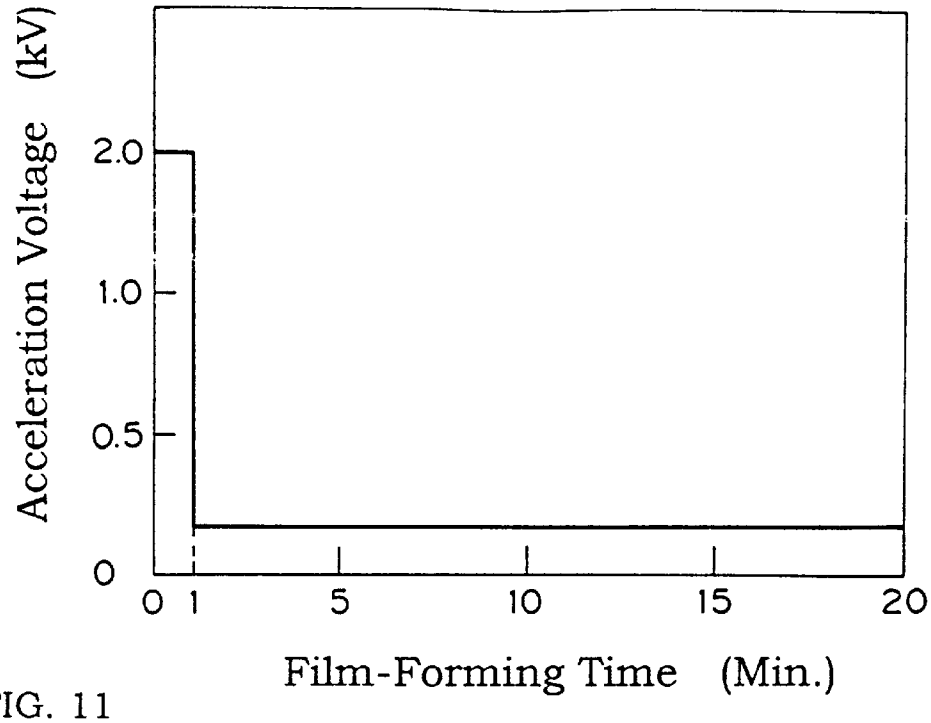
Acceleration Voltage (kV)
2.0
1.0
0.5
0
0 1 5 10 15 20
Film-Forming Time (Min.)

FIG. 11

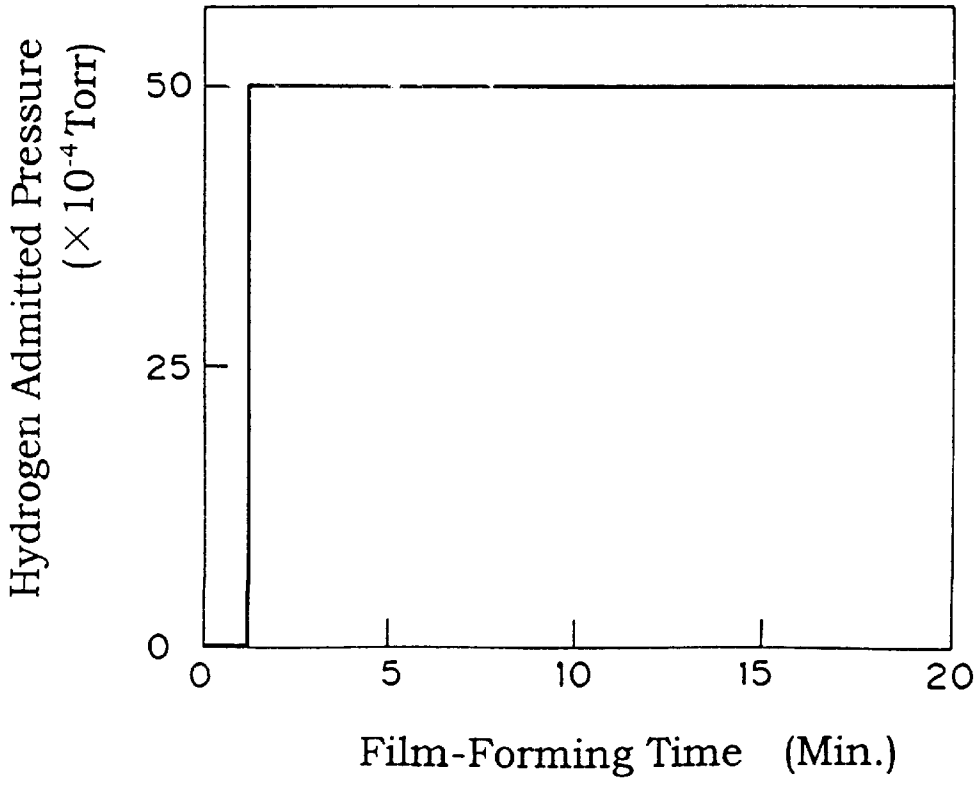
Hydrogen Admitted Pressure
(×10⁻⁴ Torr)
50
25
0
0 5 10 15 20
Film-Forming Time (Min.)

FIG. 12

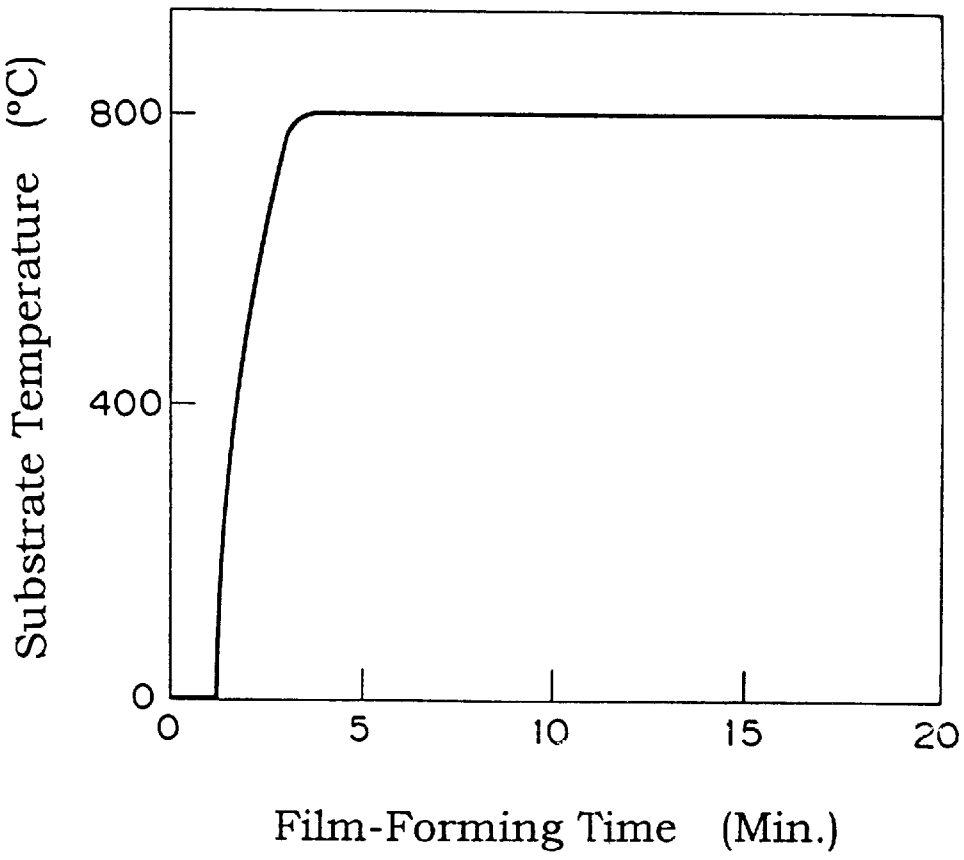
Substrate Temperature (°C)
800
400
0
0
5
10
15
20
Film-Forming Time (Min.)

FIG. 13

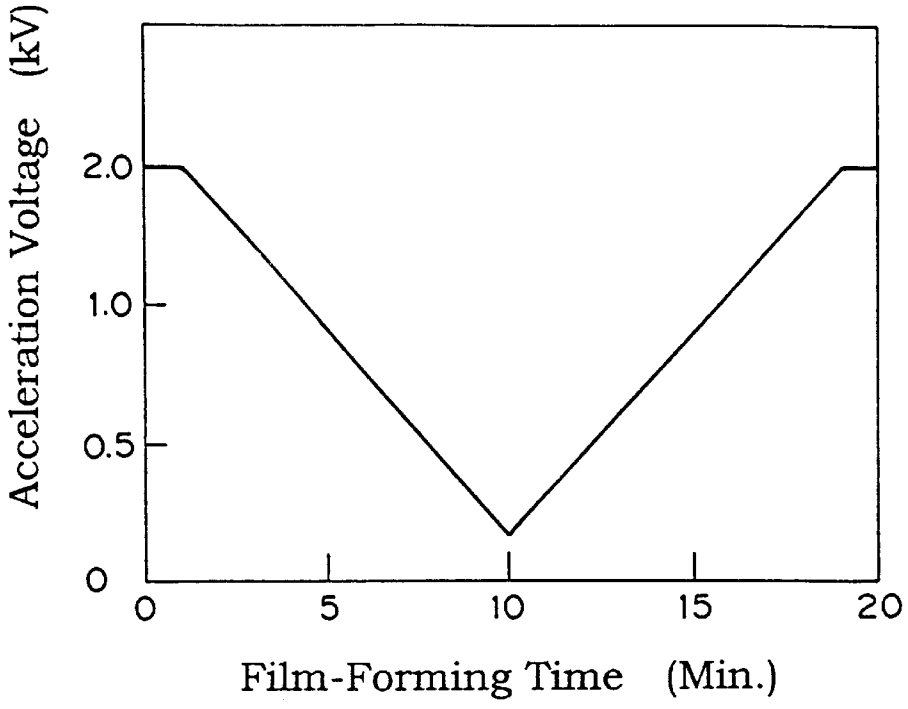
Acceleration Voltage (kV)
2.0
1.0
0.5
0
0
5
10
15
20
Film-Forming Time (Min.)

FIG. 14

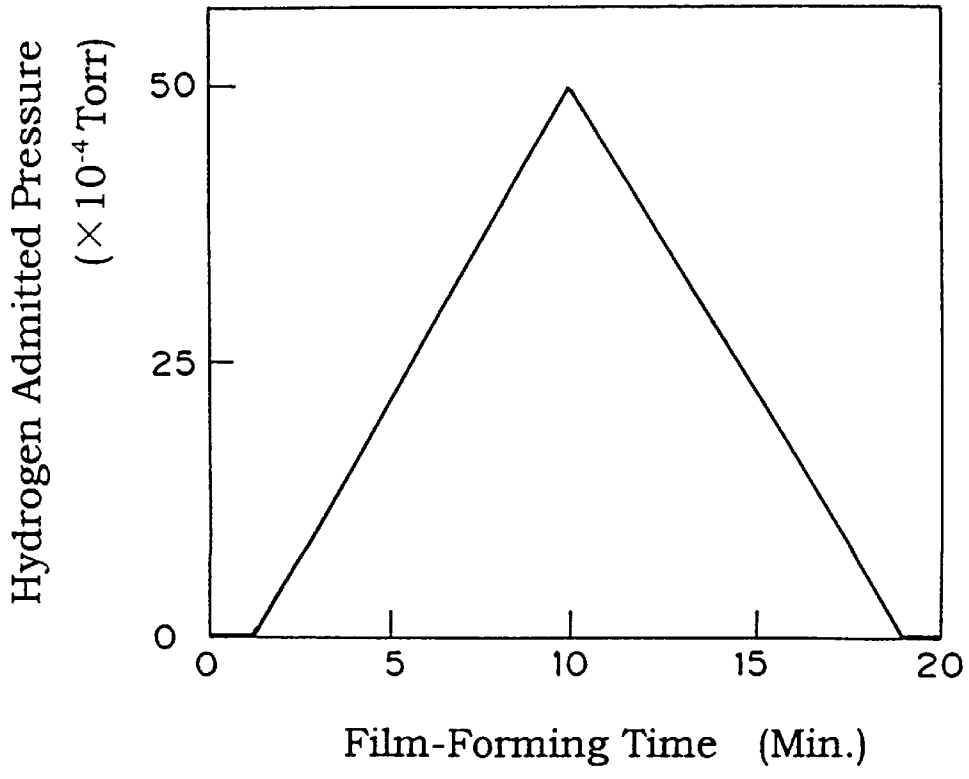
Hydrogen Admitted Pressure
(× 10⁻⁴ Torr)
50
25
0
0
5
10
15
20
Film-Forming Time (Min.)

FIG. 15

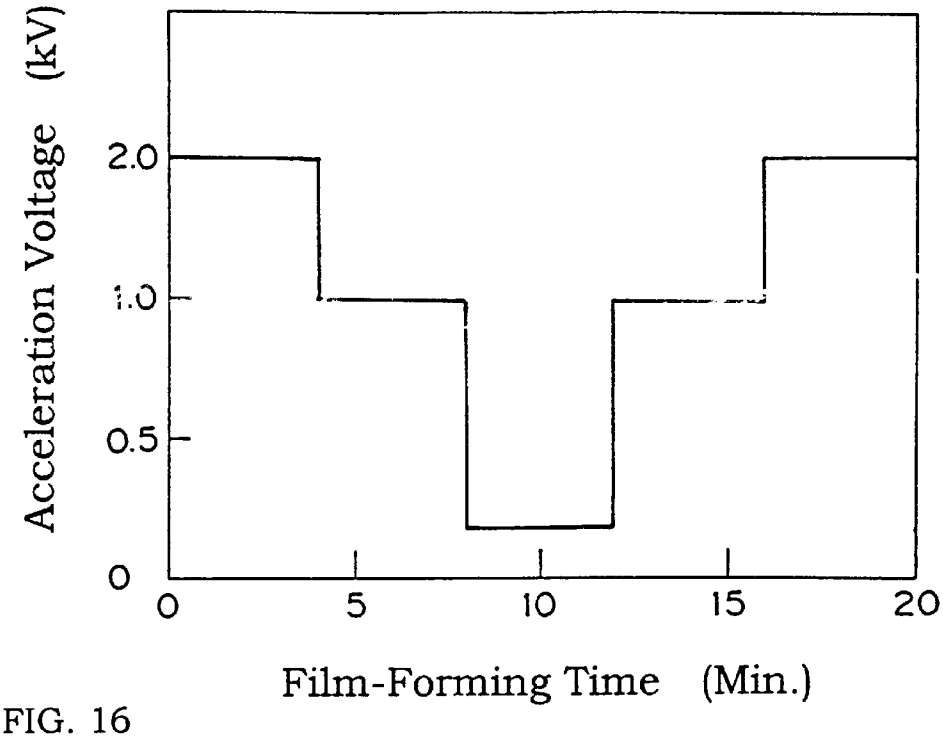
Acceleration Voltage (kV)
2.0
1.0
0.5
0
0
5
10
15
20
Film-Forming Time (Min.)

FIG. 16

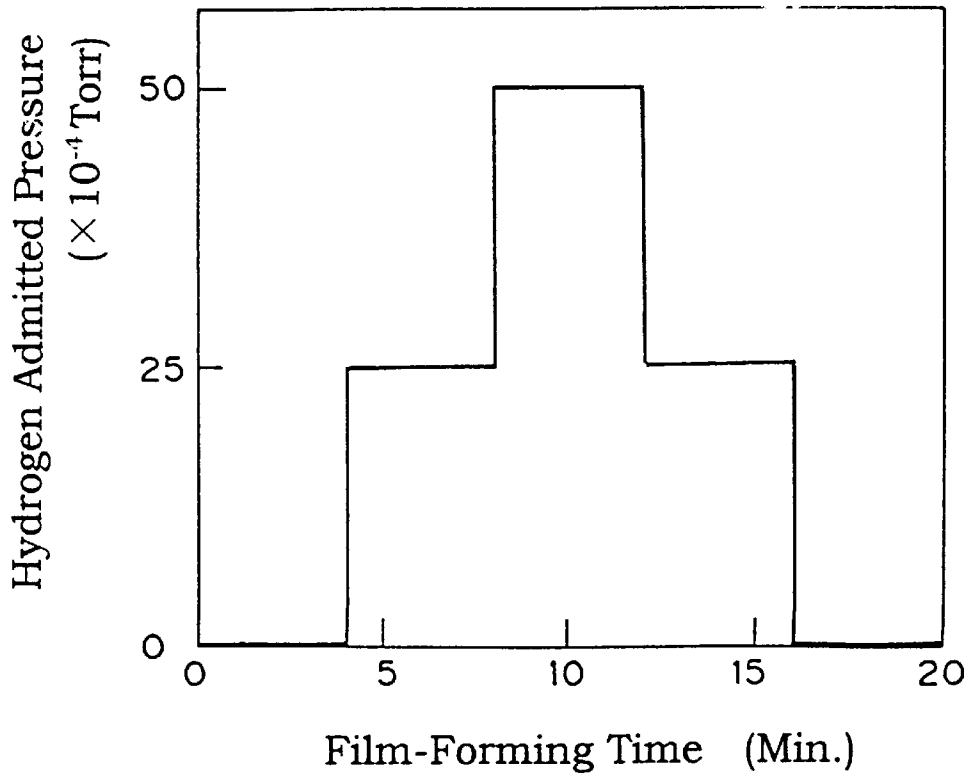
Hydrogen Admitted Pressure
(×10⁻⁴Torr)
50
25
0
0
5
10
15
20
Film-Forming Time (Min.)

FIG. 17

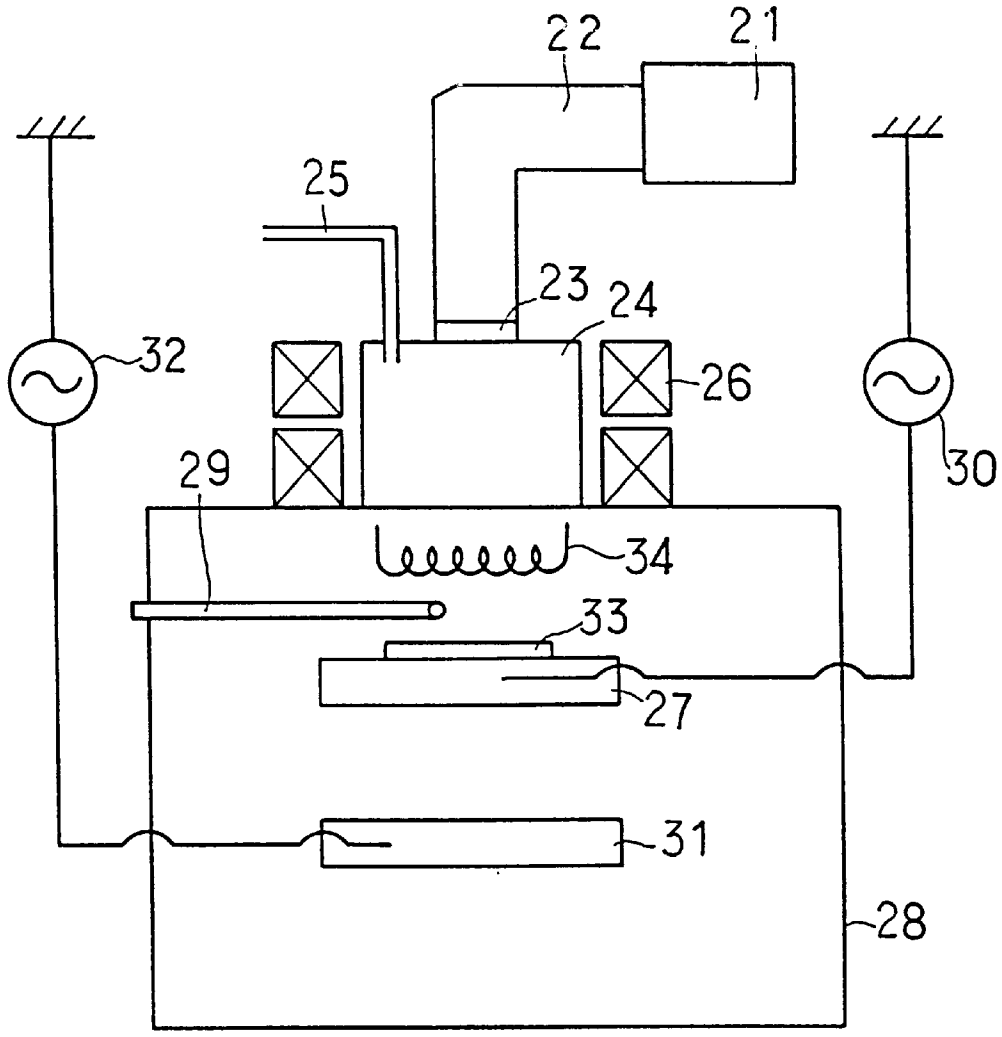

FIG. 18

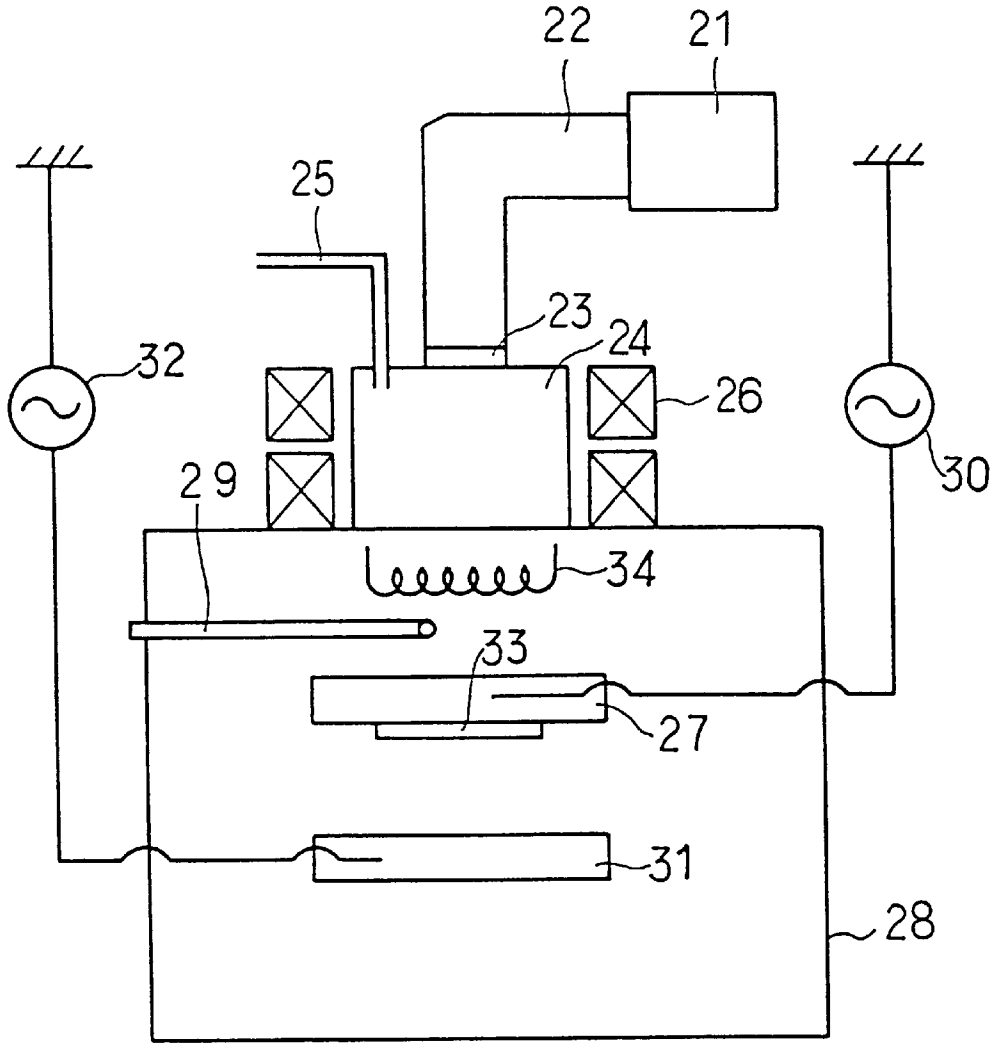

FIG. 19

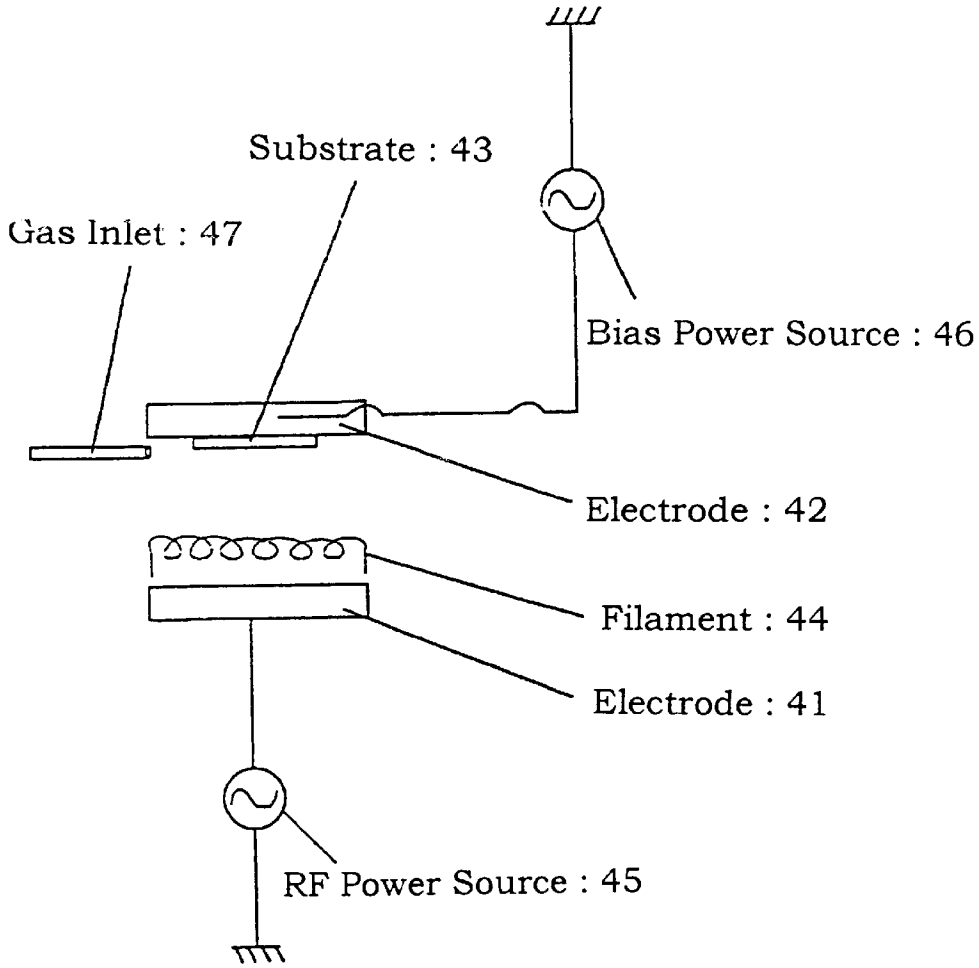
Substrate : 43
Gas Inlet : 47
Bias Power Source : 46
Electrode : 42
Filament : 44
Electrode : 41
RF Power Source : 45

FIG. 20

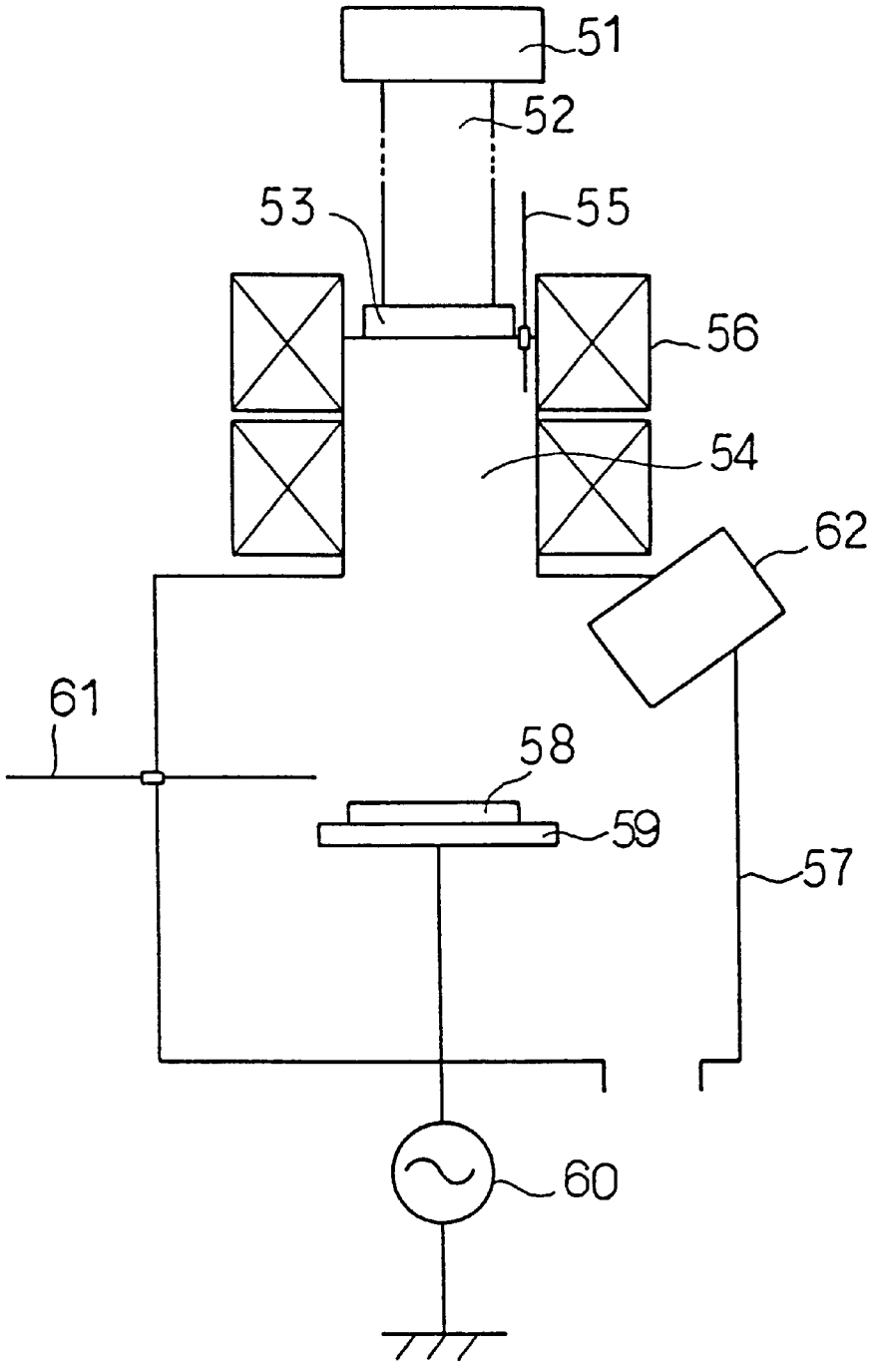

FIG. 21

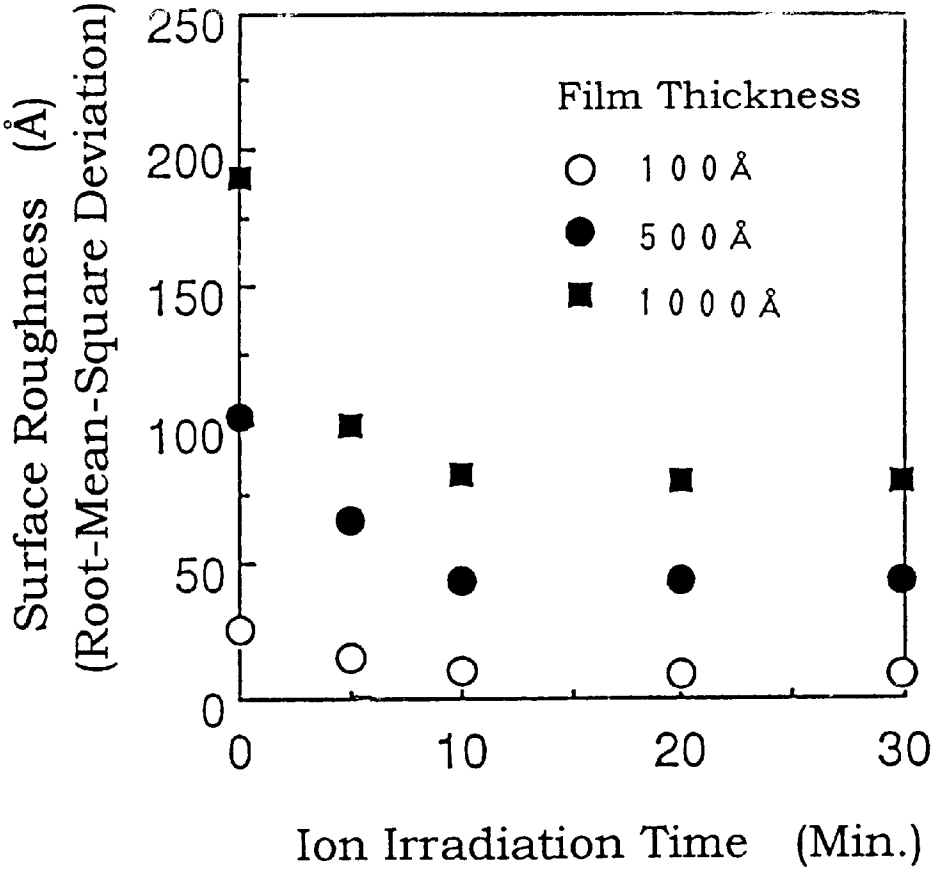
Surface Roughness (Å)
(Root-Mean-Square Deviation)
250
200
150
100
50
0
0
10
20
30
Ion Irradiation Time (Min.)
Film Thickness
100Å
500Å
1000Å

HARD CARBON THIN FILM AND METHOD OF FORMING THE SAME

BACKGROUND OF THE INVENTION

Field of the Invention

The present invention relates to a hard carbon thin film and a method of forming the hard carbon thin film.

Description of Related Art

Hard carbon thin films exhibit excellent hardness, resistivity, chemical stability and the others, and have gathered expectations for their applications to functional thin films for electronic devices and semiconductors, e.g. protective coatings on sliding parts for compressors such as rotary compressors, protective coatings on blades such as electric shaver blades, protective coatings on masks for screen deposition as well as on squeegees, constituent film layers of solar cells, protective coatings on thin film magnetic heads, and protective coatings on SAW devices.

In the above applications, poor adhesion of the hard carbon thin film to an underlying layer becomes problematic occasionally. A technique to improve its adhesion to the underlying layer such as a substrate has been proposed which provides a silicon interlayer between the underlying layer and the hard carbon thin film (See, for example, Japanese Patent Laying-Open No. Hei 1-317197 (1989)).

Although the conventional techniques such as mentioned above have a potential advantage of imparting increased adhesion, delamination of the hard carbon thin film from the underlying layer is disadvantageously occasioned when influenced by the internal stress of the hard carbon thin film which becomes greater as a thickness thereof increases. Also, the interlayer must be formed in a separate step which results in a complicated fabrication.

In view of the above, there has been a continuing need for a hard carbon thin film which is capable of exhibiting an improved adherence to an underlying layer such as a substrate.

A crystalline hard carbon thin film, as generally called a diamond thin film, is typically formed through thermal decomposition of a material gas such as methane using a hot filament. Such a technique is however accompanied by the elevation of a substrate temperature up to about 1000° C. which limits the material type of a substrate to be used. Also, the diamond thin film thus formed generally exhibits a large surface irregularity, which necessitates post-polishing thereof to smooth the surface, such as for use as a surface acoustic wave device.

A diamond-like thin film mainly consisting of non-crystalline or amorphous components has also been known as illustrative of the hard carbon thin film. Such a diamond-like thin film is generally formed using a plasma CVD technique which permits the formation thereof at a reduced substrate temperature around a room temperature. The diamond-like thin film thus formed is superior in surface smoothness but is generally inferior in surface hardness to the diamond thin film.

Accordingly, there remain a need for a technique which is capable of forming diamond thin films having smaller surface irregularities at reduced substrate temperatures, and another need for a technique which is capable of forming diamond-like thin films having increased surface hardnesses. Such needs would be met if a technique is provided which can control to some extent those mechanical properties of the diamond and diamond-like thin films to form hard carbon thin films with tailored properties. However, such a technique has not been reported up to date.

SUMMARY OF THE INVENTION

It is an object of the present invention to provide a hard carbon thin film which exhibits a satisfactory hardness as well as a good adhesion to an underlying layer such as a substrate, and a method of forming the hard carbon thin film.

It is another object of the present invention to provide a method for forming a hard carbon thin film which can control a proportion of crystalline and non-crystalline components in the thin film as well as its film properties such as hardness and surface smoothness.

A hard carbon thin film in accordance with a first aspect of the present invention characteristically has a graded structure in which a ratio of sp^2 to sp^3 carbon-carbon bonding (hereinafter referred to as "sp^2/sp^3 ratio") in the thin film decreases in its thickness direction from a film/underlayer interface toward a surface of the thin film.

A hard carbon thin film in accordance with a second aspect of the present invention comprises two or more layers having respective individual sp^2/sp^3 ratios different from each other, so that the sp^2/sp^3 ratio in the thin film decreases in a stepwise manner in its thickness direction from a film/underlayer interface toward a surface of the thin film.

A hard carbon thin film in accordance with a second aspect of the present invention characteristically has a graded structure in which the sp^2/sp^3 ratio in the thin film in its thickness direction decreases from a film/underlayer interface to a minimum and increases therefrom toward a surface of the thin film.

A hard carbon thin film in accordance with a fourth aspect of the present invention characteristically comprises three or more layers having respective individual sp^2/sp^3 ratios different from each other, so that the sp^2/sp^3 ratio in the thin film decreases in a stepwise manner in its thickness direction from a film/underlayer interface to a minimum and increases therefrom in a stepwise manner toward a surface of the thin film.

The sp^2 and sp^3 carbon-carbon bondings indicate different forms of chemical bonding between carbon atoms. It is generally known that the carbon-carbon bonding in the diamond thin film is predominantly sp^3 while that in a graphite is predominantly sp^2. It is also known that an amorphous diamond-like carbon thin film, as well as a partially crystalline diamond-like carbon thin film, may have a structure in which both sp^2 and sp^3 carbon-carbon bondings are distributed therethrough. In the present invention, such a sp^2/sp^3 ratio is characteristically varied in a film thickness direction as described earlier.

In the present invention, the sp^2/sp^3 ratio is varied preferably in the range of 0–3. Accordingly, the present invention is intended to include the case where the sp^2/sp^3 ratio is zero, i.e., the carbon-carbon bonding in the thin film is essentially devoid of sp^2 and predominantly of sp^3.

In general, the increased sp^2/sp^3 ratio, accordingly the increased proportion of sp^2 carbon-carbon bonding tends to cause a decrease in internal stress to provide better adhesion to an underlying layer such as a substrate. On the other hand, the reduced sp^2/sp^3 ratio, accordingly the increased proportion of sp^3 carbon-carbon bonding tends to produce a film with increased hardness and internal stress.

The sp^2/sp^3 ratio as specified in the present invention can be determined such as by an electron energy loss spectroscopy (EELS).

In the present invention, the hard carbon thin film is contemplated to include a crystalline diamond carbon thin film, an amorphous diamond-like carbon thin film, and a diamond-like carbon thin film having a partial crystalline structure. Accordingly, the change of sp^2/sp^3 ratio in a thickness direction of a thin film may be accompanied by the change in proportion of crystalline and non-crystalline components in the thickness direction of the film.

The hard carbon thin film according to the present invention can be formed using generally-employed film-forming techniques. Foremost among those techniques are plasma CVD techniques including an ECR plasma CVD technique. A hot-filament CVD technique may also be used. Such techniques as to physically form thin films may also be applicable which include a sputtering technique and an ion beam deposition technique using an ion gun. Furthermore, the thin film may be formed using any combination of the above-mentioned plasma CVD, hot-filament CVD, sputtering and ion-beam deposition techniques.

The hard carbon thin film of the present invention may be formed on an underlying layer such as a substrate through an interlayer interposed therebetween. The material types of the interlayer include Si, Ti, Zr, W, Mo, Ru, Ge and oxides, nitrides and carbides thereof. The interlayers comprised of such materials can be formed such as by a magnetron RF sputtering technique. For example, any of those metallic elements can be sputtered in an argon plasma to form the interlayer. An oxygen or nitrogen gas may be introduced into a chamber during the sputtering to form the interlayer comprised of oxides or nitrides of any of those elements. The interlayer is formed to a typical thickness in the range of 20Å–300Å.

A first method for forming the hard carbon thin film of the present invention using a plasma CVD technique is characterized in that ion species, associated with formation of the thin film, in a plasma are varied in kinetic energy with film-forming time, so that the sp^2/sp^3 ratio in the hard carbon thin film is varied in its thickness direction. In order to vary the kinetic energies of those ion species, an acceleration voltage may be applied to them by applying a voltage to a grid disposed between a plasma generation chamber and a substrate, for example.

A second method for forming the hard carbon thin film of the present invention using a plasma CVD technique is characterized in that a varied amount of a hydrogen gas is admitted to a reaction system for its change with film-forming time, so that the sp^2/sp^3 ratio in the thin film is varied in its thickness.

A third method for forming the hard carbon thin film of the present invention using a plasma CVD technique is characterized in that a substrate temperature is varied with film-forming time, so that the sp^2/sp^3 ratio in the thin film formed on the substrate is varied in its thickness direction.

A fourth method for forming the hard carbon thin film of the present invention using a plasma CVD technique is characterized in that the proportion of ion species associated with formation of the thin film is varied with film-forming time, so that the sp^2/sp^3 ratio in the thin film is varied in its thickness direction. Those ion species associated with formation of the thin film include CH_3^+ and CH_2^+, for example. The sp^2/sp^3 ratio in the thin film can be varied in its thickness direction by varying the proportion of those ion species with film-forming time.

The above-described first through fourth methods may be performed independently or in any combination thereof.

Furthermore, the hard carbon thin film of the present invention can be formed using a technique in accordance with a fifth aspect of the present invention which will be described hereinafter.

The film-forming method of the present invention characteristically utilizes a plasma CVD process in varying the ion species associated with formation of the thin film to thereby varying the composition or structure of the thin film in its thickness direction. The composition or structural gradient in a thickness direction of the thin film can be produced such as by varying the sp^2/sp^3 ratio in a thickness direction of the thin film, e.g., by varying the ion species, such as CH_3^+ and CH_2^+ as described above as being associated with formation of the thin film, with film-forming time.

In accordance with a fifth aspect of the present invention, a method is provided for forming a hard carbon thin film through decomposition of a material gas. A characteristic feature of the method is that the material gas is decomposed using a technique of exposing them to heat or/and to a plasma whereby the film properties of the resulting hard carbon thin film can be controlled.

The method in accordance with the fifth aspect of the present invention combines a thermal decomposition technique, which is suited for formation of hard carbon thin films having higher degrees of crystallinity such as diamond thin films, and a plasma-assisted decomposition technique which is suited for formation of hard carbon thin films having a major proportion of amorphous components such as diamond-like thin films, to thereby control a proportion of crystalline and non-crystalline components in the hard carbon thin film and accomplish the control of its film properties such as hardness and surface smoothness.

Illustrative of the thermal decomposition technique is a technique which thermally decomposes the material gas by exposing them to heat from a hot filament disposed above a substrate on which the hard carbon thin film is to be deposited.

Exemplary techniques of forming the hard carbon thin films through plasma-assisted decomposition of the material gas include generally-employed plasma CVD, radio-frequency (RF) plasma CVD, DC plasma CVD, and electron cyclotron resonance (ECR) plasma CVD techniques. The ECR plasma CVD technique is preferred when desired to form wide-area hard carbon thin films.

In one embodiment practicing the method in accordance with the fifth aspect of the present invention, the film formation through the thermal decomposition of the material gas is followed by the additional film formation through the plasma-assisted decomposition of the material gas. As discussed earlier, the use of thermal decomposition technique is effective in forming the hard carbon thin film having a higher degree of crystallinity. The succeeding film formation thereon using the plasma-assisted decomposition technique is affected by the higher degree of crystallinity of the underlying hard carbon thin film to result in formation of the additional hard carbon thin film having an increased degree of crystallinity or hardness as a whole.

In another embodiment practicing the method in accordance with the fifth aspect of the present invention, the film formation through the thermal decomposition of the material gas is effected while the film formation through the plasma-assisted decomposition of the material gas is in progress. Such a simultaneous occurrence of the thermal and plasma-assisted decomposition of the material gas results in formation of the hard carbon thin film having a higher degree of crystallinity or hardness than when formed solely through the plasma-assisted decomposition of the material gas.

In the fifth aspect of the present invention, whether the hard carbon thin film formed has a crystalline diamond nature or an amorphous diamond-like nature depends upon the film-forming conditions respectively through the thermal decomposition and plasma-assisted decomposition of the raw material gas. Accordingly, the suitable control of these film-forming conditions results in formation of the hard carbon thin film having tailored film properties.

Also, whether the hard carbon thin film formed has a crystalline diamond nature or an amorphous diamond-like nature can be determined such as by a Raman spectroscopy, as will be described hereinafter.

In a further narrowed aspect of the present invention, a method for forming a hard carbon thin film comprises a first step and a subsequent second step. In the first step, a hard carbon thin film is formed using a first technique incorporating at least a film-forming technique through thermal decomposition of a material gas. The first step is followed by the second step in which an additional hard carbon thin film is formed thereon using a second technique incorporating at least a film-forming technique through decomposition of the material gas by a plasma.

In the first step, a hard carbon thin film is formed by using the first technique incorporating at least the film-forming technique through thermal decomposition of a material gas. Accordingly, the hard carbon thin film may be formed by solely using the film-forming technique through thermal decomposition of the material gas. If desired, the first technique may further incorporate another film-forming technique, such as the film-forming technique through plasma-assisted decomposition of the material gas, for simultaneous practice with the film-forming technique through thermal decomposition of the material gas.

In the second step, the additional hard carbon thin film is formed thereon using the second technique incorporating at least the film-forming technique through plasma-assisted decomposition of the material gas. Accordingly, a hard carbon thin film may be formed by solely using the film-forming technique through plasma-assisted decomposition of the material gas. If desired, the second technique may further incorporate another film-forming technique, such as the film-forming technique through thermal decomposition of the material gas, for simultaneous practice with the film-forming technique through plasma-assisted decomposition of the material gas.

Since in the first step, the hard carbon thin film is formed by using the first technique incorporating at least the film-forming technique through thermal decomposition of the material gas, a relatively high degree of crystallinity can be imparted to the resulting hard carbon thin film. In the second step, the second technique is used to form the additional hard carbon thin film on the hard carbon thin film having the higher degree of crystallinity resulting from the first step, so that the relatively high degree of crystallinity of the underlying hard carbon thin film favorably affects the succeeding formation of the additional hard carbon thin film in the second step. Therefore, the hard carbon thin film can be formed which has a relatively high degree of crystallinity or hardness as a whole. Also, since the second technique incorporates at least the film-forming technique through plasma-assisted decomposition of the material gas, amorphous components may be produced in the overlying hard carbon thin film formed by using the second technique, thereby imparting a relatively good surface smoothness, approaching at best to that of the diamond-like thin film, to the resulting hard carbon thin film.

In accordance with the present aspect, the second technique incorporating at least the film-forming technique through plasma-assisted decomposition of the material gas at a relatively low temperature, when practiced subsequent to the first technique incorporating at least the film-forming technique through thermal decomposition of the material gas, imparts a smooth surface as well as an increased degree of crystallinity or hardness as a whole to the overlying hard carbon thin film.

In the fifth aspect of the present invention, in addition to admitting the material gas, a method further admits a hydrogen gas to a reaction system to thereby control film properties of the resulting hard carbon thin films. Introduction of the hydrogen gas contributes to removal of graphite components to permit selective formation of diamond thin films which have higher degrees of crystallinity and hardness.

Also in the fifth aspect of the present invention, a hard carbon thin film is formed on a substrate through an interlayer provided therebetween. The formation of the hard carbon thin film through the interlayer improves its characteristics, e.g. adhesion or adherence to the substrate. The interlayer may be comprised of a thin film of Si, Ti, Zr, Ge, or oxides or nitrides thereof. The film thickness of the interlayer is not particularly specified, but is preferably in the range of 20Å–1000Å.

In a sixth aspect of the present invention, a method is provided which forms an amorphous carbon coating on a substrate. Characteristically, a substrate is at its surface cleaned prior to formation of the hard carbon thin film thereon, and/or the hard carbon thin film is at its growth surface cleaned during formation thereof. The precleaning of the substrate serves to remove dusts, surface irregularities and scratches, which if present, provide undesirable growth surfaces on the substrate, to assure an uniform growth of the amorphous carbon coating on the substrate. Also, the cleaning or etching during coating formation serves to eliminate irregularity or unevenness of the coating growth surface to further insure the uniform growth of the amorphous carbon coating.

Ion or energy beam irradiation may be effected to clean the substrate surface prior to coating formation and/or the coating growth surface during the coating formation. In the ion beam irradiation, inert gas ions such as an Ar gas ion may be emitted such as by an ion gun. The condition of ion beam emission is not particularly specified, but generally at an ion current density of 0.01–5 mA/cm^2, an acceleration voltage of 20–10,000 eV, and an inert gas partial pressure of 1×10^{-6}–1×10^{-1} Torr.

An electron or laser beam may be employed to effect the energy beam irradiation. The electron beam may be emitted under a typical current density condition of 1×10^{-2}–1×10^{1} A/cm^2. The laser beam may be emitted under a typical power density condition of 1×10^{-3}–1×10^{8} W/cm^2. Laser beam sources include excimer, argon, YAG, CO^2, He—Cd, semiconductor, ruby lasers. Such an energy beam is generally scanned over the substrate surface or the coating growth surface. The energy beam may be provided in a pulsed form, if necessary.

Also in the sixth aspect of the present invention, in order for the substrate surface to be cleaned, the substrate may be irradiated with a plasma prior to coating formation thereon. The plasma may be an inert gas plasma, for example. A voltage may be applied to the substrate for acceleration of the produced plasma onto the substrate. For example, a radio-frequency voltage may be applied to the substrate so that a negative voltage is generated in the substrate which preferably has an absolute value of 20 V or higher.

In the case where the cleaning or etching is effected during coating formation, such a treatment preferably completes after the lapse of about one tenth of a total film-forming process from the start of coating formation.

For the method for forming an amorphous carbon film in accordance with the sixth aspect of the present invention, applicable film-forming techniques include general vapor phase epitaxial techniques, e.g., CVD techniques as represented by plasma CVD techniques such as the ECR plasma CVD technique and hot-filament CVD technique, sputtering and vacuum deposition techniques.

In accordance with the sixth aspect of the present invention, the surface cleaning treatment either prior to or during coating formation results in formation of an amorphous carbon coating which exhibits a surface roughness h_{rms} not exceeding one fifth of a thickness thereof. Under a selected cleaning condition, an amorphous carbon coating may be formed which exhibit a surface roughness h_{rms} not exceeding one tenth of a thickness thereof. The values of surface roughness has can be determined by using a stylus-based technique, and indicated by root-mean-square deviations from a mean surface.

An amorphous carbon coating in accordance with the sixth aspect of the present invention characteristically exhibits, immediately after formation thereof, a surface roughness h_{rms} not exceeding one fifth, preferably one tenth of a thickness thereof. The amorphous carbon coating in accordance with the sixth aspect of the present invention exhibits such a surface roughness immediately after formation thereof, i.e., before any post-processing, such as polishing, is applied to a coating surface immediately after formation thereof.

BRIEF DESCRIPTION OF THE DRAWINGS

FIG. **1** is a schematic cross-sectional view of one embodiment of a hard carbon thin film in accordance with a first aspect of the present invention;

FIG. **2** is a graph showing a varied sp^2/sp^3 ratio in a thickness direction of the hard carbon thin film shown in FIG. **1**;

FIG. **3** is a schematic cross-sectional view of one embodiment of a hard carbon thin film in accordance with a second aspect of the present invention;

FIG. **4** is a graph showing a varied sp^2/sp^3 ratio in a thickness direction of the hard carbon thin film shown in FIG. **3**;

FIG. **5** is a graph showing a varied sp^2/sp^3 ratio in a thickness direction of one embodiment of a hard carbon thin film in accordance with a third aspect of the present invention;

FIG. **6** is a graph showing a varied sp^2/sp^3 ratio in a thickness direction of one embodiment of a hard carbon thin film in accordance with a fourth aspect of the present invention;

FIG. **7** is a schematic constituent diagram of an exemplary ECR plasma CVD apparatus for forming hard carbon thin films in accordance with the present invention;

FIG. **8** is a graph showing a first exemplary pattern of an acceleration voltage varied with film-forming time for application to a grid in accordance with one embodiment of the present invention;

FIG. **9** is a graph showing a first exemplary pattern of a supply pressure, varied with film-forming time, to which a hydrogen gas is admitted in a reaction system in accordance with one embodiment of the present invention;

FIG. **10** is a graph showing a second exemplary pattern of an acceleration voltage varied with film-forming time for application to a grid in accordance with another embodiment of the present invention;

FIG. **11** is a graph showing a second exemplary pattern of a supply pressure, varied with film-forming time, to which a hydrogen gas is admitted in a reaction system in accordance with another embodiment of the present invention;

FIG. **12** is a graph showing a substrate temperature varied with film-forming time in accordance with one embodiment of the present invention;

FIG. **13** is a graph showing a third exemplary pattern of an acceleration voltage varied with film-forming time for application to a grid in accordance with still another embodiment of the present invention;

FIG. **14** is a graph showing a third exemplary pattern of a supply pressure, varied with film-forming time, to which a hydrogen gas is admitted in a reaction system in accordance with still another embodiment of the present invention;

FIG. **15** is a graph showing a fourth exemplary pattern of an acceleration voltage varied with film-forming time for application to a grid in accordance with still another embodiment of the present invention;

FIG. **16** is a graph showing a fourth exemplary pattern of a supply pressure, varied with film-forming time, to which a hydrogen gas is admitted in a reaction system in accordance with still another embodiment of the present invention;

FIG. **17** is a schematic cross-sectional view of an exemplary film-forming apparatus for embodying a method in accordance with a fifth aspect of the present invention;

FIG. **18** is a schematic cross-sectional view of the apparatus of FIG. **17** wherein a substrate holder is so rotated as for a substrate to face toward a target;

FIG. **19** is a schematic cross-sectional view of another exemplary film-forming apparatus for embodying the method in accordance with the fifth aspect of the present invention;

FIG. **20** is a schematic cross-sectional view of an exemplary amorphous coating forming apparatus for embodying a method in accordance with a sixth aspect of the present invention; and

FIG. **21** is a graph showing a relationship between surface roughness of amorphous carbon coatings formed in accordance with the sixth aspect of the present invention and a time period during which a substrate is exposed to ion radiation for cleaning thereof prior to formation of the amorphous carbon coatings.

DESCRIPTION OF THE PREFERRED EMBODIMENTS

FIG. **1** is a schematic cross-sectional view of one embodiment of a hard carbon thin film in accordance with a first aspect of the present invention. Formed on a substrate **1** is a hard carbon thin film **2**.

FIG. **2** is a graph showing the changes of sp^2/sp^3 ratio in a thickness direction of the hard carbon thin film **2** of FIG. **1**. As shown in FIG. **2**, the sp^2/sp^3 ratio decreases in the thickness direction of the film, i.e., toward its surface from a film/substrate interface. It follows that the hard carbon thin film **2** has an increased sp^2/sp^3 ratio and accordingly a reduced internal stress in the vicinity of the film/substrate interface, and has good adhesion to the substrate **1**. Also, the hard carbon thin film **2** has a decreased sp^2/sp^3 ratio and

accordingly increased hardness and internal stress in the vicinity of its surface.

FIG. **3** is a schematic cross-sectional view of one embodiment of a hard carbon thin film in accordance with a second aspect of the present invention. Formed on the substrate **1** is a hard carbon thin film **3** comprised of plural layers **3***a* through **3***e* stacked on the substrate **1**.

FIG. **4** is a graph showing the changes of sp^2/sp^3 ratio in a thickness direction of the hard carbon thin film **3** of FIG. **3**. As shown in FIG. **4**, the sp^2/sp^3 ratio decreases in a stepwise manner from layer to layer in the thickness direction of the film, i.e., toward its surface from a film/substrate interface. As can be seen from FIG. **4**, in this particular embodiment, each layer has a substantially uniform sp^2/sp^3 ratio through its thickness, and the layers are stacked on the substrate in a sequence of decreasing sp^2/sp^3 ratio to constitute the hard carbon thin film **3**. The lower-most layer **3***a* adjacent to the substrate **1** comprises a composition having the greatest sp^2/sp^3 ratio and accordingly the least internal stress for better adherence to the substrate **1**. The upper-most layer **3***e* adjacent to the surface of the hard carbon thin film **3** comprises a composition having the least sp^2/sp^3 ratio and accordingly the greatest internal stress and hardness.

FIG. **5** is a schematic cross-sectional view of one embodiment of a hard carbon thin film in accordance with a third aspect of the present invention. A hard carbon thin film in accordance with the present embodiment is formed on a substrate in the same manner as the embodiment shown in FIG. **1**. The sp^2/sp^3 ratio gradually decreases from a substrate/film interface to a minimum at an intermediate of the thin film, and then increases therefrom toward a surface of the thin film. Accordingly, the hard carbon thin film comprises compositions having the greater sp^2/sp^3 ratios and the less internal stresses in the respective vicinities of the substrate/film interface and the film surface. The hard carbon thin film is at its intermediate less in the sp^2/sp^3 ratio, and accordingly higher in both film hardness and internal stress. As a result, the hard carbon thin film has a smooth surface due to the greater sp^2/sp^3 ratio.

FIG. **6** is a schematic cross-sectional view of one embodiment of a hard carbon thin film in accordance with a fourth aspect of the present invention. A hard carbon thin film of this embodiment is constructed by stacking plural layers **3***a* through **3***e* on the substrate **1** in the same manner as the embodiment shown in FIG. **3**. As can be seen from FIG. **6**, the sp^2/sp^3 ratio decreases in a stepwise manner from a lower-most layer adjacent to a substrate/film interface to a minimum at an intermediate layer, and then increases therefrom in a stepwise manner toward an upper-most layer adjacent to a surface of the thin film. Accordingly, the lower-most and upper-most layers have the greater sp^2/sp^3 ratios and the lower internal stresses, respectively. The intermediate layer has the least sp^2/sp^3 ratio, and accordingly the higher film hardness and internal stress. Also, the hard carbon thin film has an extremely smooth surface for its greater sp^2/sp^3 ratio. As a result, the hard carbon thin film in accordance with the fourth aspect has a smooth surface due to the greater sp^2/sp^3 ratio and is still high in its overall hardness.

FIG. **7** is a schematic cross-sectional view showing an exemplary ECR plasma CVD apparatus which is capable of forming the hard carbon thin film of the present invention. Referring to FIG. **7**, a vacuum chamber **18** has a plasma generation chamber **14** to which one end of a waveguide **12** is connected. Another end of the waveguide **12** is mounted to a microwave supplying means **11**. A microwave generated in the microwave supplying means **11** passes through the waveguide **12** and a microwave inlet window **13** to be guided into the plasma generation chamber **14**.

The plasma generation chamber **14** is provided with a gas inlet line **15** for introducing a discharge gas such as argon (Ar), as well as a raw material gas such as methane (CH_4) or hydrogen (H_2), into the plasma generation chamber **14**. Also, a plurality of plasma magnetic field generators **16** are mounted circumferentially of the plasma generation chamber **14**. A high density ECR plasma can be generated within the plasma generation chamber **14** through the interaction of a high-frequency magnetic field produced by the microwave and a magnetic field generated by the plasma magnetic field generators **16**.

The vacuum chamber **18** encloses a substrate holder **17** on which a substrate **10** is placed. In this embodiment, employed as the substrate **10** is a sliding part of a rotary compressor, i.e., a vane (made of high-speed tool steel).

Located in an area between the plasma generation chamber **14** and the substrate **10** is a grid **19** to which a cathode of a direct-current power source **20** is connected for applying a negative voltage to the grid **19**. The application of negative voltage to the grid **19** imparts an accelerating energy to positive ions in the plasma within the plasma generation chamber **14** so that the positive ions are accelerated onto the substrate **10**. Therefore, the ion kinetic energy in the plasma can be controlled by regulating the voltage to be applied to the grid. In specific, the ion kinetic energy can be increased by applying an increased acceleration voltage to the grid **19**.

EXAMPLE 1

The apparatus shown in FIG. **7** is employed to form a hard carbon thin film having a graded structure in which the sp^2/sp^3 ratio decreases continuously in a uniform manner in a thickness direction of the film, i.e., toward its surface from a film/substrate interface.

The vacuum chamber **18** is first evacuated to a pressure of 10^{-5}–10^{-7} Torr. Then, Ar and CH_4 gases are introduced into the plasma generation chamber **14** at respective pressures of 2.5×10^{-4} Torr. and 3.0×10^{-4} Torr. to convert them into plasmas within the plasma generation chamber **14**.

Next, the varying acceleration voltage is applied to the grid **19** in such a controlled fashion that it is maintained at 2 kV for the first one minute period at the initial stage of film formation and decreased with film-forming time to a final value of 200 V, as shown in FIG. **8**. Concurrently, an H_2 gas is introduced through the gas inlet line **15** into the plasma generation chamber **14** in such a controlled fashion that its supply pressure starts to rise after the lapse of one minute at the initial stage of film formation and continuously increases with film-forming time to a final value of 5.0×10^{-3} Torr., as shown in FIG. **9**.

A hard carbon thin film is thus formed on the substrate **10**. The obtained hard carbon thin film was measured for the sp^2/sp^3 ratios in its thickness direction by an electron energy loss spectroscopy (EELS). As a result, the sp^2/sp^3 ratio was found to be 3 for the substrate-neighboring film portion formed during the first one minute period at the initial stage of film formation while the sp^2/sp^3 ratio was found to be zero for the film surface portion in which the C—C bonding was essentially devoid of sp^2 and predominantly sp^3. Also, the substrate-neighboring film portion was found as comprising amorphous diamond-like carbon while the film surface portion as comprising crystalline diamond.

The surface portion of the hard carbon thin film obtained was measured for hardness to reveal a value of 7000 Hv

(Vickers hardness). For comparative purposes, the acceleration voltage applied to the grid was maintained at 2 kV from the start till the completion of film formation to form a hard carbon thin film of Comparative Example 1-1 which was measured for hardness to reveal a value of 4000 Hv.

Also, in order to evaluate the adherence of the obtained hard carbon thin film to the substrate, a constant load (2 kg) indentation test was carried out using a Vickers penetrator. Fifty sample pieces were used for the test, and the number of sample pieces which showed delamination was counted as indicating the level of adherence of the hard carbon thin film. For comparative purposes, a hard carbon thin film of Comparative Example 1-2 was formed with no acceleration voltage applied to the grid during film formation, which was duly subjected to the indentation test using a Vickers penetrator as similar to the above. The number of sample pieces which showed delamination was found to be 0 for the hard carbon thin film of Example 1 according to the present invention, and 26 for the hard carbon thin film of Comparative Example 1-2.

As can be appreciated from the foregoing, in addition to being high in hardness, the hard carbon thin film in accordance with the present invention is excellent in adherence.

EXAMPLE 2

The apparatus shown in FIG. **7** is employed to form a hard carbon thin film having a graded structure in which the sp^2/sp^3 ratio decreases in a stepwise manner (one step in this Example) in a thickness direction of the film, i.e., toward its surface from a film/substrate interface.

The vacuum chamber **18** is first evacuated to a pressure of 10^{-5}–10^{-7} Torr. Then, Ar and CH_4 gases are introduced into the plasma generation chamber **14** at respective pressures of 2.5×10^{-4} Torr. and 3.0×10^{-4} Torr. to convert them into plasma within the plasma generation chamber **14**.

Next, the varying acceleration voltage is applied to the grid **19** in such a controlled fashion that it is maintained at 2 kV for the first one minute period at the initial stage of film formation and thereafter maintained at 200 V until the completion of film formation, as shown in FIG. **10**. Concurrently, an H_2 gas is introduced through the gas inlet line **15** into the plasma generation chamber **14**. As shown in FIG. **11**, the H_2 gas supply is commenced after the lapse of one minute period at the initial stage of film formation and thereafter maintained at 5.0×10^{-3} Torr. until the completion of film formation.

A hard carbon thin film is thus formed on the substrate **10**. The obtained hard carbon thin film was measured for the sp^2/sp^3 ratios in its thickness direction by an electron energy loss spectroscopy (EELS). As a result, the sp^2/sp^3 ratio was found to be 3 for the substrate-neighboring film portion formed during the first one minute period at the initial stage of film formation, while the sp^2/sp^3 ratio was found to be zero for the remaining overlying film portion in which the C—C bonding was essentially devoid of sp^2 and predominantly sp^3. Also, the substrate-neighboring film portion was found as comprising amorphous diamond-like carbon while the remaining overlying film portion as comprising crystalline diamond carbon.

The surface portion of the hard carbon thin film obtained was measured for hardness to reveal a value of 8000 Hv. For comparative purposes, the acceleration voltage applied to the grid was maintained at 2 kV from the start till the completion of film formation to form a hard carbon thin film of Comparative Example 2-1 which was measured for hardness to reveal a value of 4000 Hv.

Also, in order to evaluate the adherence of the obtained hard carbon thin film to the substrate, a constant load (2 kg) indentation test was carried out using a Vickers penetrator. Fifty sample pieces were used for the test, and the number of sample pieces which showed delamination was counted as indicating the level of adherence of the hard carbon thin film. For comparative purposes, a hard carbon thin film of Comparative Example 2-2 was formed with no acceleration voltage applied to the grid during film formation, which was duly subjected to the indentation test using a Vickers penetrator as similar to the above. The number of sample pieces which showed delamination was found to be 0 for the hard carbon thin film of Example 2 according to the present invention, and 26 for the hard carbon thin film of Comparative Example 2-2.

As can be appreciated from the foregoing, in addition to being high in hardness, the hard carbon thin film in accordance with the present invention is excellent in adherence.

EXAMPLE 3

The apparatus shown in FIG. **7** is employed to form a hard carbon thin film having a graded structure in which the sp^2/sp^3 ratio decreases continuously in a uniform manner in a thickness direction of the film, i.e., toward its surface from a film/substrate interface.

The vacuum chamber **18** is first evacuated to a pressure of $10^{-5}10^{-7}$ Torr. Then, Ar and CH_4 gases are introduced into the plasma generation chamber **14** at respective pressures of 2.5×10^{-4} Torr. and 3.0×10^{-4} Torr. to convert them into respective gas plasmas within the plasma generation chamber **14**.

The constant acceleration voltage of 1 kV is applied to the grid **19** during film formation.

As shown in FIG. **12**, a substrate temperature is set at 20° C. (room temperature) for the first one minute period at the initial stage of film formation. After the one minute period, heating is applied to increase the substrate temperature so that it approaches about 800° C. when 3 minutes elapse from the start of film formation. The substrate temperature is thereafter maintained at 800° C. until the completion of film formation. Besides, an H_2 gas is introduced into the plasma generation chamber **14**, which is maintained at 5.0×10^{-3} Torr. during film formation.

A hard carbon thin film is thus formed on the substrate **10**. The obtained hard carbon thin film was measured for the sp^2/sp^3 ratios in its thickness direction by an electron energy loss spectroscopy (EELS). As a result, the sp^2/sp^3 ratio was found to be 3 for the substrate-neighboring film portion formed during the first one minute period at the beginning of film formation, while the sp^2/sp^3 ratio was found to be zero for the remaining overlying film portion in which the C—C bonding was essentially devoid of sp^2 and predominantly sp^3. Also, the substrate-neighboring film portion was found as comprising amorphous diamond-like carbon while the remaining overlying film portion as comprising crystalline diamond carbon.

The surface portion of the hard carbon thin film obtained was measured for hardness to reveal a hardness of 7000 Hv.

Also, in order to evaluate the adherence of the obtained hard carbon thin film to the substrate, a constant load (2 kg) indentation test was carried out using a Vickers penetrator. Fifty sample pieces were used for the test, and the number of sample pieces which showed delamination was counted as indicating the level of adherence of the hard carbon thin film. The results demonstrated that no sample piece showed delamination.

As can be appreciated from the foregoing, in addition to being high in hardness, the hard carbon thin film in accordance with the present invention is excellent in adherence.

EXAMPLE 4

In this Example, the apparatus shown in FIG. **7** is employed to form a hard carbon thin film having a graded structure in which the sp^2/sp^3 ratio once decreases from a substrate/film interface to a minimum at an intermediate thickness of the thin film, and then increases therefrom toward a surface of the thin film.

The vacuum chamber **18** is first evacuated to a pressure of 10^{-5}–10^{-7} Torr. Then, Ar and CH_4 gases are introduced into the plasma generation chamber **14** at respective pressures of 2.5×10^{-4} Torr. and 3.0×10^{-4} Torr. to convert them into respective gas plasmas within the plasma generation chamber **14**.

Next, the varying acceleration voltage is applied to the grid **19** in such a controlled fashion that it is maintained at 2 kV for the first one minute period at the initial stage of film formation, decreased with film-forming time to a minimum value of 200 V when 10 minutes elapse from the start of film formation, and increased to a final value of 2 kV, as shown in FIG. **13**. Concurrently, an H_2 gas is introduced into the plasma generation chamber **14** by varying its supply pressure in such a controlled fashion that it starts to increase with film-forming time after the lapse of one minute period at the initial stage of film formation, reaches a maximum value of 5.0×10^{-3} Torr. when 10 minutes elapse from the start of film formation, and decreases with film-forming time to zero one minute before the completion of film formation, as shown in FIG. **14**.

A surface portion of the hard carbon thin film thus formed was measured for hardness to reveal a value of 6000 Hv, and also determined for surface roughness (R_{max}) to reveal a value of 20 Å, when measured by a surface roughness tester, which accounted for an extremely smooth surface of the hard carbon thin film.

EXAMPLE 5

In this Example, the apparatus shown in FIG. **7** is employed to form a hard carbon thin film having a graded structure in which the sp^2/sp^3 ratio once decreases in a stepwise manner from a substrate/film interface to a minimum at an intermediate thickness of the thin film, and then increases therefrom in a stepwise manner toward a surface of the thin film.

The vacuum chamber **18** is first evacuated to a pressure of 10^{-5}–10^{-7} Torr. Then, Ar and CH_4 gases are introduced into the plasma generation chamber **14** at respective pressures of 2.5×10^{-4} Torr. and 3.0×10^{-4} Torr. to convert them into plasma within the plasma generation chamber **14**.

Next, the varying acceleration voltage is applied to the grid **19** in such a stepwise manner that it is maintained at 2 KV during an initial 4-minute film-forming period, at 1 kV during a second 4-minute film-forming period, at 200 V during a third 4-minute film-forming period, at 1 kV during a fourth 4-minute film-forming period, and at 2 kV during a final 4-minute film-forming period, as shown in FIG. **15**. Concurrently, an H_2 gas is introduced into the plasma generation chamber **14** by varying its supply pressure in such a stepwise manner that it is maintained at zero during the initial 4-minute film-forming period, at 2.5×10^{-3} Torr. during the second 4-minute film-forming period, at 5.0×10^{-3} Torr. during the third 4-minute film-forming period, at 2.5×10^{-3} Torr. during the fourth 4-minute film-forming period, and at zero during a final 4-minute film-forming period, as shown in FIG. **16**.

A surface portion of the hard carbon thin film thus formed was measured for hardness to reveal a value of 7000 Hv, and also determined for surface roughness (R_{max}) to reveal a value of 20 Å, when measured by a surface roughness tester, which accounted for an extremely smooth surface of the hard carbon thin film.

Although the ECR plasma CVD technique was employed in the above Examples, the other techniques such as an RF plasma CVD technique may also be employed to form the hard carbon thin film.

In order to vary the sp^2/sp^3 ratio in a thickness direction of the hard carbon thin film, several techniques are employed in the above Examples which include varying the acceleration voltage applied to the grid, varying the supply amount of hydrogen introduced into the reaction chamber, and varying the substrate temperature. Another technique may also be employed to vary the sp^2/sp^3 ratio in a thickness direction of the hard carbon thin film, which varies a negative bias voltage produced by application of a high-frequency power to the substrate. Alternatively, the sp^2/sp^3 ratio can be varied in a thickness direction of the hard carbon thin film by introducing oxygen into a reaction system to thereby controlling development of sp^2 C—C bonding.

Although the vane, a sliding part of a rotary compressor, is used as the substrate in the above Examples, the present invention is not limited thereto and other sliding parts including an electric shaver blade, a mask for screen deposition and a squeegee may also be used as the substrate. Also, the hard carbon thin film of the present invention is applicable for use as a constituent layer of a solar cell, a protective coating on a thin film magnetic head, and a protective or propagation film for surface acoustic wave devices.

Although the sliding part is described in the above Examples as comprising high-speed tool steel, the material type of the sliding part is not limited thereto. Applicable materials include other steels, iron-based alloys, cast iron (MoNiChro cast iron), aluminum alloys, carbons (aluminum-impregnated carbon), ceramics (oxides, nitrides and carbides of Ti, Al, Zr, Si, W, and Mo), Ni-based alloys, stainless steel.

In accordance with the first through fourth aspects of the present invention, the hard carbon thin film is provided which is high in hardness and assures excellent adherence to an underlying layer such as a substrate.

FIG. **17** is a schematic cross-sectional view showing an exemplary apparatus for forming a hard carbon thin film in accordance with the fifth aspect of the present invention. Referring to FIG. **17**, a vacuum chamber **28** is provided with a plasma generation chamber **24** to which one end of a waveguide **22** is connected. A microwave supplying means **21** is mounted to another end of the waveguide **22**. A microwave generated in the microwave supplying means **21** passes through the waveguide **22** and a microwave inlet window **23** to be guided into the plasma generation chamber **24**. The plasma generation chamber **24** is provided with a discharge gas inlet line **25** for introducing a discharge gas such as argon (Ar) into the plasma generation chamber **24**. A plurality of plasma magnetic field generators **26** are mounted circumferentially of the plasma generation chamber **24**. A high density plasma can be generated within the plasma generation chamber **24** through the interaction of a high-frequency magnetic field produced by the microwave

and a magnetic field generated by the plasma magnetic field generators **26**. The vacuum chamber **28** encloses a substrate holder **27** to which a high-frequency power source **30** is connected for applying a bias voltage to a substrate during film formation.

A substrate **33** is held on the substrate holder **27**. A leading end of a raw material gas supply tube **29** is located above the substrate holder **27** for introducing into the vacuum chamber **28** a material gas for use in formation of a hard carbon thin film. Also disposed above the substrate **33** is a filament **34** for thermally decomposing the raw material gas supplied from the raw material gas supply tube **29**.

Positioned below the substrate holder **27** is a target **31** (Si target in this Example) for use in formation of an interlayer. A high-frequency power source **32** is connected to the target **31** to enable generation of an Ar plasma between the substrate holder **27** and the target **31**.

Examples will now be given below which utilize the apparatus shown in FIG. **17** in forming hard carbon thin films.

EXAMPLE 6

A silica glass is used as the substrate **33**. Si is first deposited on the substrate **33** to form an interlayer. As shown in FIG. **18**, the substrate holder **27** is rotated so that the substrate **33** is oriented to face toward the target **31** located below the substrate **33**. In this arrangement, the vacuum chamber **28** is evacuated to a pressure of 10^{-5}–10^{-7} Torr. Then, the Ar gas is supplied at 5.7×10^{-4} Torr. from the raw material gas supply tube **29**. The high-frequency power source **32** supplies an RF voltage to the target **31** to generate the Ar plasma between the target **31** and the substrate holder **27**. The target **31** is sputtered by ions in the plasma to form the interlayer (film thickness of 300 Å) comprised of Si.

Next, the substrate holder **27** is again rotated to return to its initial position as shown in FIG. **17**. In such a position, CH_4 and H_2 gases are supplied from the raw material gas supply tube **29** at 5.0×10^{-4} Torr. and 2.0×10^{-3} Torr., respectively. A voltage of 13 V is applied to the filament **34** which is accordingly heated to a temperature of about 2000° C. Upon exposure to heat from the filament **34**, the CH_4 gas is thermally decomposed to result in formation of a diamond thin film on the substrate **33**. The film formation is continued for about 5 minutes so that the diamond film is formed on the substrate **33** to a thickness of about 500 Å, wherein the substrate temperature is increased to 400° C.

The subsequent reduction in the voltage applied to the filament allows the filament temperature to drop to 1000° C. from about 2000° C. The microwave supplying means **21** supplies a microwave at 2.45 GHz and 100 W. Concurrently, the Ar gas is supplied at 5.7×10^{-4} Torr. from the discharge gas inlet line **25** to generate the Ar plasma within the plasma generation chamber **24**. The Ar plasma is directed onto the substrate **33**. Simultaneously with this process, the high-frequency power source **30** applies a 13.56 MHz RF voltage to the substrate holder **27** so that a self-bias voltage of −50 V is generated in the substrate, and the CH_4 and H_2 gases are supplied at 1.3×10^{-3} Torr. and 2.0×10^{-2} Torr., respectively from the raw material gas supply tube **29**. The CH_4 gas is decomposed by the Ar plasma directed toward the substrate **33**, and a diamond thin film is formed on the substrate **33**. In this manner, the diamond thin film is deposited to a thickness of about 2000 Å. As a result, the diamond thin film is formed on the substrate **33** to a total thickness of about 2500 Å. The substrate temperature is in the range of 250–300° C. during this process.

The results of Raman spectroscopic analysis revealed a sharp peak at 1330 cm^{-1} to demonstrate a typical diamond nature of the diamond thin film formed on the substrate **33**. This diamond thin film was also measured for hardness and surface roughness, the results of which are given in Table 1. The surface roughness was measured using a contact-type surface profile tester.

EXAMPLE 7

The procedure of Example 6 was repeated to form a thin film, except that the supply pressure of H_2 gas was reduced to a half of that used in Example 6. The results of Raman spectroscopic analysis revealed the significant increase in amount of amorphous components in the thin film to demonstrate its structural shift, i.e. from a polycrystalline diamond thin film to a thin film containing amorphous components. Besides, the thin film obtained was measured for hardness and surface roughness, the results of which are given in Table 1.

COMPARATIVE EXAMPLE 3

The diamond thin-film forming process of Example 6, which relied the thermal decomposition of the CH_4 gas on its exposure to heat from the filament **34**, was continued for about 25 minutes to form a diamond thin film having a thickness of about 2500 Å on the substrate **33**, wherein the substrate temperature approached about 1000° C. The diamond nature of the thin film obtained was confirmed by Raman spectrum. The thin film obtained was measured for hardness and surface roughness, the results of which are given in Table 1.

TABLE 1

	Vickers Hardness (Hv)	Surface Roughness (μm)
Exp. 6	8000	0.1
Exp. 7	5000	0.05
Comp.Exp. 3	9000	2

As can be readily appreciated from Table 1, the film formation through thermal decomposition of the raw material gas is able to provide a very hard diamond thin film with a smooth surface when followed by the film formation through both thermal and ECR plasma-assisted decomposition of the raw material gas. Also, although the substrate temperature approached 1000° C. in Comparative Example 3, as stated earlier, the maximum substrate temperature was 400° C. in Example 6, which demonstrates the ability of the combined film forming process to form the diamond thin films at lower temperatures.

Also, it will be appreciated from the comparison between Examples 6 and 7 that the regulated supply of the hydrogen gas enables the control of amorphous components in the hard carbon thin films. That is, as the larger amount of hydrogen gas is supplied, the more crystalline components are incorporated in the resulting hard carbon thin film. Stated differently, as the smaller amount of hydrogen gas is supplied, the more amorphous components are incorporated in the resulting hard carbon thin film.

EXAMPLE 8

In this example, subsequent to formation of a diamond thin film by using a hot filament for thermally decomposing a raw material gas, the ECR plasma-assisted decomposition of the raw material gas was solely effected to form an

additional thin film. That is, the procedure of Example 6 was repeated to form a hard carbon thin film, except that the substrate was heated to about 400° C. using a heater accommodated in the substrate holder **27**, instead of applying the voltage to the filament **34** for heating thereof. The results of Raman spectroscopic analysis revealed a sharp peak at 1330 cm^{-1} to demonstrate a typical diamond nature of the hard carbon thin film obtained. This diamond thin film was measured for hardness and surface roughness to exhibit values of 4500 Hv and 0.01 μm, respectively.

EXAMPLE 9

The procedure of Example 8 was followed to form a thin film, with the exception that the substrate temperature was maintained at room temperature during the film formation through the ECR plasma-assisted decomposition of the material gas, i.e., no heating was applied to the substrate. The results of Raman spectroscopic analysis revealed a main peak at 1530 cm^{-1} and a shoulder peak at 1400 cm^{-1} to demonstrate a typical diamond-like nature of the thin film obtained. The diamond-like thin film obtained was measured for hardness and surface roughness, the results of which are given in Table 2.

COMPARATIVE EXAMPLE 4

The procedure of Example 9 was followed to form a thin film, except that the diamond film forming process using a hot filament for thermally decomposing the raw material gas was eliminated, an Si interlayer was formed directly on the substrate, and the substrate temperature was maintained at room temperature during the film forming process through the ECR plasma-assisted decomposing of the material gas to form a thin film having a thickness of about 2500 Å on the Si interlayer. The thin film obtained was determined as being the diamond-like thin film. The hardness and surface roughness of the thin film obtained are shown in Table 2.

TABLE 2

	Vickers Hardness (Hv)	Surface Roughness (μm)
Exp. 9	3500	0.005
Comp.Exp. 4	3000	0.004

As can be readily appreciated from Table 2, the additional film formation utilizing the ECR plasma subsequent to the film formation through the thermal decomposition of raw material gas, in accordance with the fifth aspect of the present invention, enables the provision of a very hard diamond-like thin film.

EXAMPLE 10

The procedure of Example 6 was repeated to form a diamond thin film, except that a voltage of 7 V was applied to the filament. The results of Raman spectroscopic analysis demonstrated that the thin film obtained contained a higher proportion of amorphous components compared to the thin film obtained in Example 6. The thin film obtained was measured for hardness and surface roughness to exhibit values of 6000 Hv and 0.07 μm, respectively.

EXAMPLE 11

In this Example, the Ar and nitrogen gasses equal in amount were supplied respectively at 5.7×10^{-4} Torr. to convert them into gas plasmas which sputtered the Si target to form an Si nitride interlayer. That is, the procedure of Example 11 was followed to form a diamond thin film, except that an Si nitride interlayer, instead of the Si interlayer, was formed. The hardness and surface roughness of the diamond thin film obtained were 8000 Hv and 0.1 μm, respectively.

EXAMPLE 12

In this Example, the Ar and oxygen gasses equal in amount were supplied respectively at 5.7×10^{-4} Torr. to convert them into gas plasmas which sputtered the Si target to form an Si oxide interlayer. That is, the procedure of Example 11 was followed to form a diamond thin film, except that an Si oxide interlayer, instead of the Si interlayer, was formed. The hardness and surface roughness of the diamond thin film obtained were 8000 Hv and 0.1 μm, respectively.

EXAMPLE 13

In this Example, a hard carbon thin film having a graded structure of varied sp^2/sp^3 ratios in accordance with the first aspect of the present invention was formed utilizing a method in accordance with the fifth aspect of the present invention.

First, the vacuum chamber **28** was evacuated to a pressure of 10^{-5}–10^{-7} Torr. Then, the Ar gas was supplied at 5.7×10^{-4} Torr. to produce the Ar plasma between the target **31** and the substrate holder **27** so that ions in the plasma sputtered the Si target, forming an Si interlayer.

After the Si interlayer forming process using a magnetron sputtering technique was terminated, the Ar gas was supplied at 5.7×10^{-4} Torr. from the discharge gas inlet line **25** of the ECR plasma generator. Concurrently, the microwave supplying means **21** supplied a microwave at 2.45 GHz and 100 W to generate the Ar plasma within the plasma generation chamber **24** for direction onto the substrate **33**. Simultaneously with this process, the high-frequency power source **30** applied a 13.56 MHz RF voltage to the substrate holder **27** so that a self-bias voltage of −50 V was generated in the substrate **33**, and the CH_4 and H_2 gases were supplied at 1.3×10^{-3} Torr. and 2.0×10^{-2} Torr., respectively from the reactive gas supply tube **29**. As a result, a hard carbon thin film was formed to a thickness of 1000 Å.

Subsequent to termination of the above film-forming process using the plasma, the CH_4 and H_2 gases were supplied at 5.0×10^{-4} Torr. and 2.0×10^{-3} Torr., respectively from the reactive gas supply tube **29**, while a voltage of 13 V was applied to the filament. The process was continued for about 10 minutes to form a diamond thin film having a thickness of about 1000 Å on the substrate **33**.

Consequently, the hard carbon thin film was formed to a total thickness of 2000° C.

In this Example, the hard carbon thin film thus obtained revealed the structural transition from a thin film structure containing amorphous components to a polycrystalline diamond thin film structure, i.e. the structural transition from an sp^2-rich film structure to an sp^3-rich film structure in its thickness direction from the substrate/film interface toward its surface.

In the above Example 7, the reduction of the H_2 gas supply pressure served to increase in amount of the amorphous components in the hard carbon thin film. However, the similar results can be attained by reducing the ECR plasma density. It is therefore possible to control film properties by adjusting the plasma density.

Although it is described in the above Examples to form the interlayer on which the hard carbon thin film is subsequently formed, the fifth aspect of the present invention is not limited thereto, and includes the case where the hard carbon film is formed directly on the substrate.

Also, although the above Examples specify the thermal decomposition of raw material gases as being effected by exposure to the hot filament, the fifth aspect of the present invention is not limited thereto.

Also, although the above Examples employ the film-forming technique solely through thermal decomposition of reactive gases in a first film-forming step for forming an initial hard carbon thin film, the fifth aspect of the present invention is not limited thereto, and includes an exemplary case where the first film-forming step relies the film formation on the decomposition of reactive gases by both heat and plasma. Also, where the film-forming process through decomposition of the reactive gases by both heat and plasma is carried out in both the first and second film-forming steps, the film-forming conditions respectively in the first and second steps may be varied from each other to impart different proportions of crystalline and non-crystalline components to the resulting hard carbon thin films.

FIG. **19** is a schematic cross-sectional view showing another exemplary apparatus for forming a hard carbon thin film in accordance with the fifth aspect of the present invention. This apparatus is so constructed to be able to carry out a parallel-plate plasma CVD process. This apparatus is also enclosed in a vacuum chamber (not shown). As shown in FIG. **19**, an electrode **41** is connected to a high-frequency power source **45**. A substrate **43** is placed on an opposite electrode **42** to which a high-frequency power source **46** is connected for supplying a bias voltage to the substrate **43**. A raw material gas inlet **47** is located in the vicinity of the substrate **43** for supplying the raw material gas therefrom. Disposed between the electrode **41** and the opposite electrode **42** is a filament **44** for exposing heat to the material gas to cause decomposition thereof.

The present invention is applicable not only to the ECR plasma CVD method, but also to the parallel-plate plasma CVD method as can be embodied using the apparatus of FIG. **19**.

In accordance with the fifth aspect of the present invention, the proportion of crystalline and non-crystalline components in a hard carbon thin film can be adjusted to provide controlled film properties, e.g. the controlled hardness and surface roughness of the hard carbon thin film. This not only permits formation of a crystalline diamond thin film with a smooth surface at relatively low temperatures, but also permits formation of a very hard amorphous diamond-like thin film.

FIG. **20** is a schematic cross-sectional view showing an exemplary apparatus for forming an amorphous carbon coating in accordance with the sixth aspect of the present invention. The apparatus is capable of carrying out the ECR plasma CVD process to form the amorphous carbon coating, e.g. a diamond-like thin film, and is adapted to be able to produce and emit ions or plasmas for surface cleaning.

Referring to FIG. **20**, an upper interior portion of a vacuum chamber **57** defines a plasma generation chamber **54** to which a microwave generator **51** is connected through a waveguide **52**. A microwave inlet window **53** is disposed at the connection between the waveguide **52** and the plasma generation chamber **54**. The plasma generation chamber **54** is also equipped with a discharge gas inlet line **55** for introducing a discharge gas such as argon (Ar) into the plasma generation chamber **54**. Plural plasma magnetic field generators **56** are mounted circumferentially of the plasma generation chamber **54**.

A reaction chamber defined interior of the vacuum chamber **57** includes a substrate holder **59** and is connected to a reactive gas inlet line **61** for introducing a reactive gas into the vacuum chamber **57**. A substrate **58** is held on the substrate holder **59** to which a high-frequency power source is connected. An ion gun **62** is mounted interior of the vacuum chamber **57** for emitting Ar ions toward the substrate **58**.

The formation of the diamond-like thin film, as illustrative of the amorphous carbon coating, utilizing the apparatus shown in FIG. **20** is explained by way of specific examples which follow.

EXAMPLE 14

First, the vacuum chamber **57** is evacuated to a pressure of 10^{-5}–10^{-7} Torr. Then, the ion gun is operated to emit Ar ions to the substrate **58** so that the substrate **58** is irradiated with the Ar ions for a predetermined time period. The ion emitting condition is set at an ion current density of 0.3 MA/cm^2, an acceleration voltage of 400 eV, and an Ar gas partial pressure of 3×10^{-5} Torr. In this example, the Ar ion irradiation was continued for 5 minutes, 10 minutes, 20 minutes, or 30 minutes.

After the ion gun operation is discontinued, the Ar gas is supplied at 5.7×10^{-4} Torr. from the discharge gas inlet line **55** of the ECR plasma generator. Concurrently, the microwave generator **51** supplies a microwave at 2.45 GHz and 200 W to generate the Ar plasma within the plasma generation chamber **54** for direction onto the substrate **58**. The CH_4 gas is supplied at 1.3×10^{-3} Torr. from the reactive gas inlet line **61**. The CH_4 gas supplied from the reactive gas inlet line **61** is decomposed due to the action of the Ar plasma to produce film-forming species which are converted into highly reactive ions or neutral active species for acceleration onto a surface of the substrate **58**. As a result, a diamond-like thin film is formed on the substrate **58**. During the above process, the high-frequency power source **60** applies a 13.56 MHz RF voltage to the substrate holder **59** so that a self-bias of −50 V is generated in the substrate **58**.

The above leads to formation of the diamond-like thin film, i.e. the amorphous carbon coating on the substrate **58**. The amorphous carbon coating is formed to a thickness of 100 Å, 500 Å, or 1000 Å.

For comparative purposes, the above procedure is followed to form on the substrate **58** an amorphous carbon coating to a thickness of 100 Å, 500 Å, or 1000 Å, except that no ion irradiation was effected.

The amorphous carbon coatings thus obtained were measured for surface roughness. The surface roughness was measured by a stylus-based testing (load: 30 mg, stylus travel speed: 25 sec/mm) using a stylus having a spherical point with a radius of about 2.5 μm, the results of which were indicated by h_{rms} (root-mean-square deviation).

FIG. **21** is a graph showing the surface roughness of respective amorphous carbon coatings having different thicknesses. As can be readily appreciated from FIG. **21**, the exposure of the substrate to ions emitted, prior to coating formation thereon, serves to impart a marked reduction in surface roughness to the resulting amorphous carbon coatings. The surface roughness of the resulting amorphous carbon coatings is demonstrated as being maintained essentially constant if the ion irradiation is continued for the period exceeding 10 minutes. As also apparent from FIG. **21**,

when the cleaning treatment of substrate surface was performed prior to coating formation thereon in accordance with the sixth aspect of the present invention, the surface roughness of the resulting amorphous carbon coating was reduced to one fifth or less of the thickness thereof.

Next, among the amorphous carbon coatings obtained, the coatings formed on the substrate after irradiated with ions for 10 minutes were measured for coefficient of kinetic friction using a load of 20 g and an alumina ball of 10 mm in diameter. For comparative purposes, the amorphous carbon coatings formed on the substrate which had not been exposed to ions prior to coating formation thereon were also measured for coefficient of kinetic friction. The measurement results are given in Table 3. In Table 3, "with ion irradiation" is intended to refer to this Example, and "without ion irradiation" to Comparative Example.

TABLE 3

		Film Thickness		
		100Å	500Å	1000Å
Friction Coefficient	With Ion Irradiation	0.10	0.15	0.13
	Without Ion Irradiation	0.12	0.18	0.17

As clearly shown in Table 3, the amorphous carbon coatings formed on the respective substrates which were cleaned at surfaces thereof by irradiation with ions prior to application of the coatings thereon exhibit lower friction coefficients at different film thicknesses compared to those of Comparative Example.

EXAMPLE 15

In this Example, the ion irradiation was effected during coating formation to clean or etch a coating growth surface by bombardment of high-velocity ions.

First, the vacuum chamber **57** is evacuated to a pressure of 10^{-5}–10^{-7} Torr. Then, the ion gun is operated to emit Ar ions under the same condition as in Example 14 to irradiate the substrate **58** with the Ar ions.

Concurrently, the Ar gas is supplied at 5.7×10^{-4} Torr. from the discharge gas inlet line **55** and the microwave generator **51** supplies a microwave at 2.45 GHz and 200 W to generate the Ar plasma within the plasma generation chamber **54** for direction onto the substrate **58**. The CH_4 gas is supplied at 1.0×10^{-3} Torr. from the reactive gas inlet line **61**. The CH_4 gas supplied from the reactive gas inlet line **61** is decomposed due to the action of the Ar plasma to produce film-forming species which are converted into highly reactive ions or neutral active species for acceleration onto a surface of the substrate **58**. As a result, an amorphous carbon coating is deposited on the substrate **58**.

As analogously to Example 14, the high-frequency power source **60** applies a 13.56 MHz RF voltage to the substrate holder **59** so that a self-bias of −50 V is generated in the substrate **58** during the above process.

The amorphous carbon coating is formed to a thickness of 100 Å, 500 Å, or 1000 Å. The amorphous carbon coatings thus obtained were measured for surface roughness in the same manner as in Example 14, the results of which are given in Table 4. Also, for comparative purposes, the amorphous carbon coatings formed without ion irradiation during formation thereof were also measured for surface roughness, the results of which are also given in Table 4.

TABLE 4

		Film Thickness		
		100Å	500Å	1000Å
Friction Coefficient	With Ion Irradiation	10Å	45Å	88Å
	Without Ion Irradiation	25Å	115Å	220Å

As can be appreciated from Table 4, cleaning or etching the coating growth surface by exposure thereof to the Ar ions during coating formation, in accordance with the sixth aspect of the present invention, serves to impart reduced surface roughness, i.e. increased surface smoothness to the resulting amorphous carbon coating.

EXAMPLE 16

In this Example, a plasma treatment was performed to clean or etch the substrate surface.

First, the vacuum chamber **57** was evacuated to a pressure of 10^{-5}–10^{-7} Torr. Then, the Ar gas is supplied at 5.7×10^{-4} Torr. from the discharge gas inlet line **55**, while the microwave generator **51** supplies a microwave at 2.45 GHz and 200 W, to generate the Ar plasma within the plasma generation chamber **54**. Concurrently, the high-frequency power source **60** applies a 13.56 MHz RF voltage to the substrate holder **59** so that a self-bias voltage of −50 V is generated in the substrate **58**. The Ar plasma generated within the plasma generation chamber **54** is thereby accelerated onto a surface of the substrate **58** to effect cleaning of the substrate surface. After irradiation with the Ar plasma for 10 minutes, an amorphous carbon coating is formed on the substrate in the same manner as in Example 14.

The amorphous carbon coating is formed to a thickness of 100 Å, 500 Å, or 1000 Å. The amorphous carbon coatings thus obtained were measured for surface roughness in the same manner as in Example 14, the results of which are given in Table 5.

TABLE 5

		Film Thickness		
		100Å	500Å	1000Å
Friction Coefficient	With Ion Irradiation	10Å	45Å	88Å
	Without Ion Irradiation	25Å	115Å	220Å

As can be appreciated from Table 5, cleaning or etching the substrate surface by irradiation with the Ar plasma prior to coating formation thereon also serves to impart reduced surface roughness, i.e. increased surface smoothness to the resulting amorphous carbon coating.

In summary, the hard carbon thin films having excellent surface smoothness can be formed in accordance with the fifth or sixth aspect of the present invention, which accordingly have utilities as for coating materials and the others.

The hard carbon thin film formed in accordance with the present invention can provide excellent characteristics when applied, for example, to shaver blades, thin-film magnetic heads, magneto-optical disks, sliding parts for compressors, antireflection coatings for use in the manufacture of semiconductors, heat sinks for semiconductor devices, surface acoustic wave devices.

What is claimed is:

1. A hard carbon thin film arrangement comprising a hard carbon thin film having a surface and an interface opposite said surface with a thickness direction extending through said thin film from said interface to said surface, and having a graded carbon composition in which a ratio of sp^2 to sp^3 carbon-carbon bonding in said thin film decreases in said thickness direction from said interface to a minimum at an internal location of said thin film between said interface and said surface, and increases from said minimum at said internal location toward said surface of said thin film.

2. The hard carbon thin film arrangement of claim **11**, wherein said thin film comprises at least two layers having respective individual sp^2/sp^3 carbon-carbon bonding ratios different from each other so that said ratio of sp^2 to sp^3 carbon-carbon bonding in said thin film decreases in said thickness direction in a stepwise manner from said interface to said minimum at said internal location and increases therefrom in a stepwise manner toward said surface of said thin film.

3. The hard carbon thin film arrangement of claim **1**, wherein said ratio of sp^2 to sp^3 carbon-carbon bonding is varied in the range of –0 to 3.

4. The hard carbon thin film arrangement of claim **1**, wherein said hard carbon thin film is a crystalline diamond carbon thin film, an amorphous diamond-like carbon thin film, or a diamond-like carbon thin film having a partial crystalline structure.

5. The hard carbon thin film arrangement of claim **1**, further comprising a substrate and an interlayer between said thin film and said substrate, wherein said interface of said thin film is in contact on said interlayer.

6. The hard carbon thin film arrangement of claim **5**, wherein said interlayer comprises at least one material selected from the group consisting of Si, Ti, Zr, W, Mo, Ru, Ge, and oxides, nitrides, and carbides thereof.

7. A method for forming the hard carbon thin film arrangement of claim **1**, using a plasma CVD technique, comprising imparting and varying an acceleration energy to film-forming ion species in a plasma so as to change kinetic energies thereof during a film-forming time while depositing said ion species, thereby forming said graded carbon composition of said thin film.

8. A method for forming the hard carbon thin film arrangement of claim **1** using a plasma CVD technique, comprising admitting and varying an amount of a hydrogen gas in a reaction system during a film-forming time while depositing said thin film, thereby forming said graded carbon composition of said thin film.

9. A method for forming the hard carbon thin film arrangement of claim **1** using a plasma CVD technique, comprising varying a substrate temperature during a film-forming time while depositing said thin film, thereby forming said graded carbon composition of said thin film.

10. A method for forming the hard carbon thin film arrangement of claim **1** using a plasma CVD technique, comprising supplying varying film-forming ion species during a film-forming time while depositing said ion species, thereby forming said graded carbon composition of said thin film.

11. A method for forming the hard carbon thin film arrangement of claim **1** using a plasma CVD technique, comprising carrying out a combination of a first film-forming process through thermal decomposition of a raw material gas and a second film-forming process through plasma-assisted decomposition of said raw material gas, in such a manner so as to form said graded carbon composition.

12. A hard carbon thin film having a surface exhibiting a surface roughness h_{rms} of not more than one fifth of a thickness of said thin film immediately after formation thereof.

13. The hard carbon thin film of claim **12**, wherein said surface roughness is not more than one tenth of said thickness of said thin film.

* * * * *

UNITED STATES PATENT AND TRADEMARK OFFICE
CERTIFICATE OF CORRECTION

PATENT NO. : 6,066,399

DATED : May 23, 2000

INVENTOR(S) : Hirano et al.

It is certified that error appears in the above-identified patent and that said Letters Patent is hereby corrected as shown below:

Col. 7, line 20, after "roughness", delete "has";

Col. 20, line 23, before "an" (**first occurrence**), replace "MA/cm^2", by --mA/cm^2--;

Col. 23, line 12, after "claim", replace "11" by --1--.

Signed and Sealed this

Twenty-seventh Day of March, 2001

Attest:

Attesting Officer

NICHOLAS P. GODICI

Acting Director of the United States Patent and Trademark Office

Exhibit C

US006071103A

United States Patent [19]

Hirano et al.

[11] **Patent Number: 6,071,103**

[45] **Date of Patent: Jun. 6, 2000**

[54] **MEMBER HAVING SLIDING CONTACT SURFACE, COMPRESSOR AND ROTARY COMPRESSOR**

[75] Inventors: **Hitoshi Hirano**, Nishinomiya; **Keiichi Kuramoto**, Kadoma; **Yoichi Domoto**, Hirakata; **Naoto Tojo**, Ikoma, all of Japan

[73] Assignee: **Sanyo Electric Co., Ltd.**, Osaka, Japan

[21] Appl. No.: **08/895,999**

[22] Filed: **Jul. 17, 1997**

[30] **Foreign Application Priority Data**

Jul. 18, 1996 [JP] Japan 8-189627
Jun. 30, 1997 [JP] Japan 9-174276

[51] **Int. Cl.**[7] **F04C 18/356**; F04C 29/00; B32B 9/00

[52] **U.S. Cl.** **418/63**; 418/152; 418/178; 428/408

[58] **Field of Search** 418/152, 178, 418/63; 428/408

[56] **References Cited**

U.S. PATENT DOCUMENTS

4,842,937 6/1989 Meyer et al. 428/408
5,021,629 6/1991 Shimomura 418/178
5,237,967 8/1993 Willermet et al. 428/408

FOREIGN PATENT DOCUMENTS

8-177772 7/1996 Japan .

Primary Examiner—John J. Vrablik
Attorney, Agent, or Firm—Arent Fox Kintner Plotkin & Kahn

[57] **ABSTRACT**

A member is disclosed which includes a hard carbon film provided through an interlayer or directly on a main body such as a vane. A mixed layer is formed within the main body or interlayer adjacent to an outer surface of the main body or interlayer. The mixed layer contains carbon and a constituent element of either the main body or the interlayer. The mixed layer has a carbon content gradient in its thickness direction so that a carbon content in a thickness portion thereof closer to an outer surface of the mixed layer is higher than in a thickness portion thereof remoter from the outer surface of the mixed layer.

11 Claims, 19 Drawing Sheets

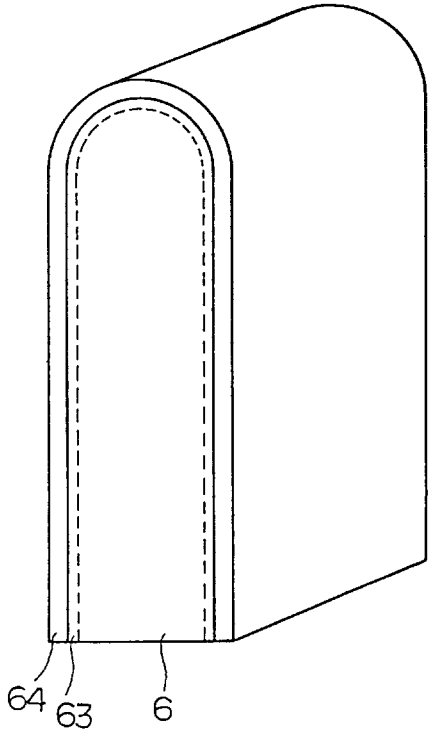

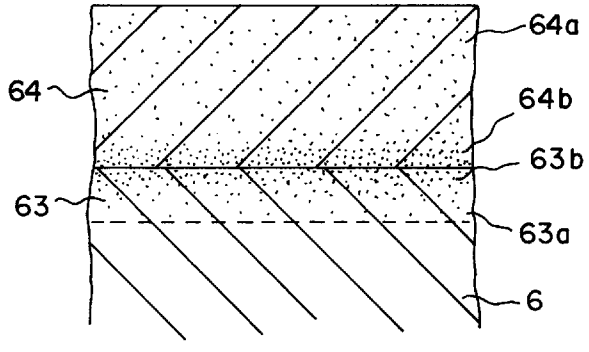

FIG. 1

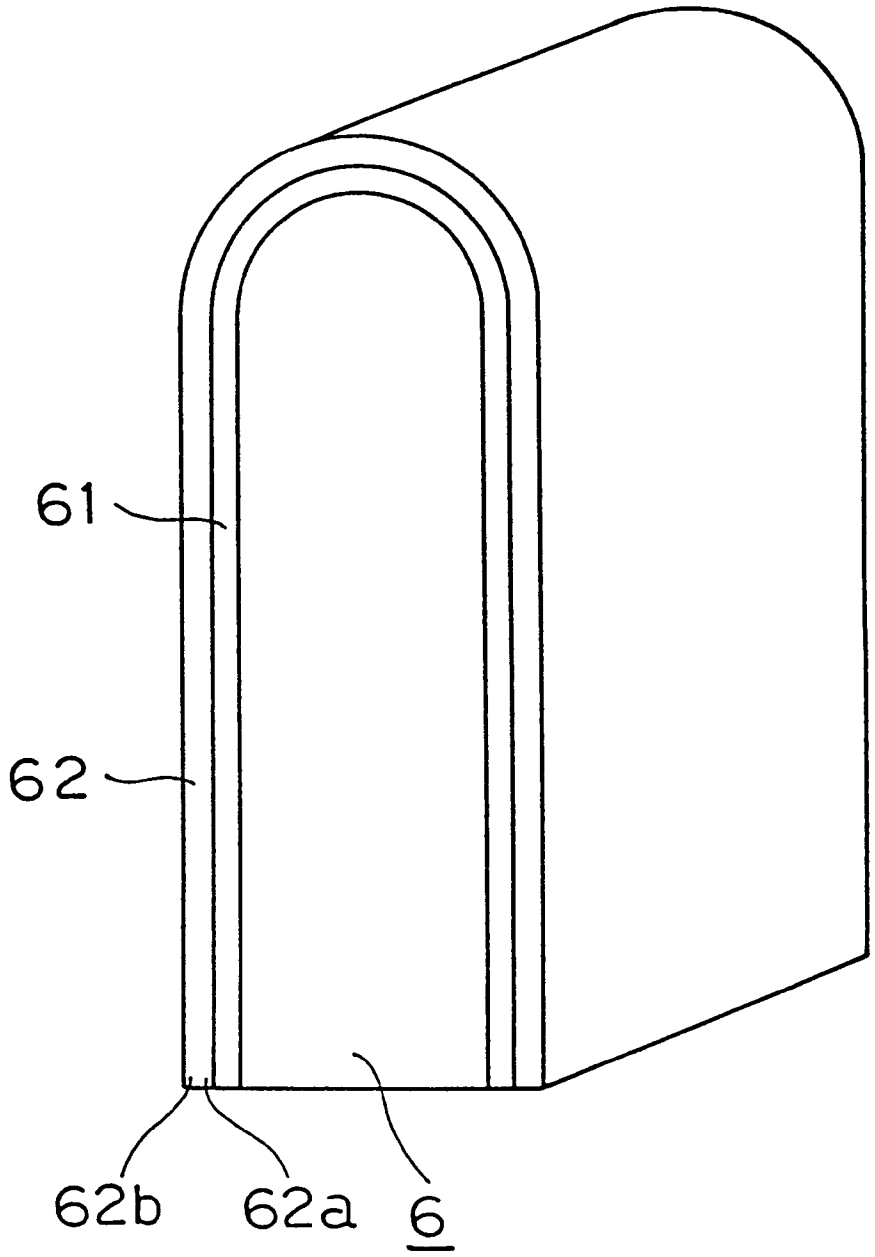

FIG. 2

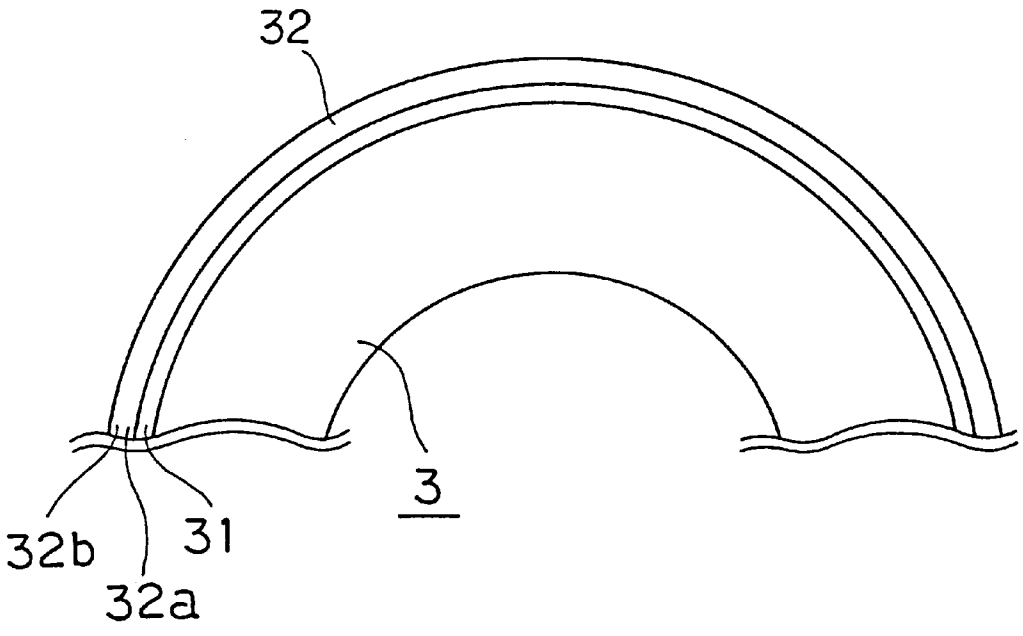

FIG. 3

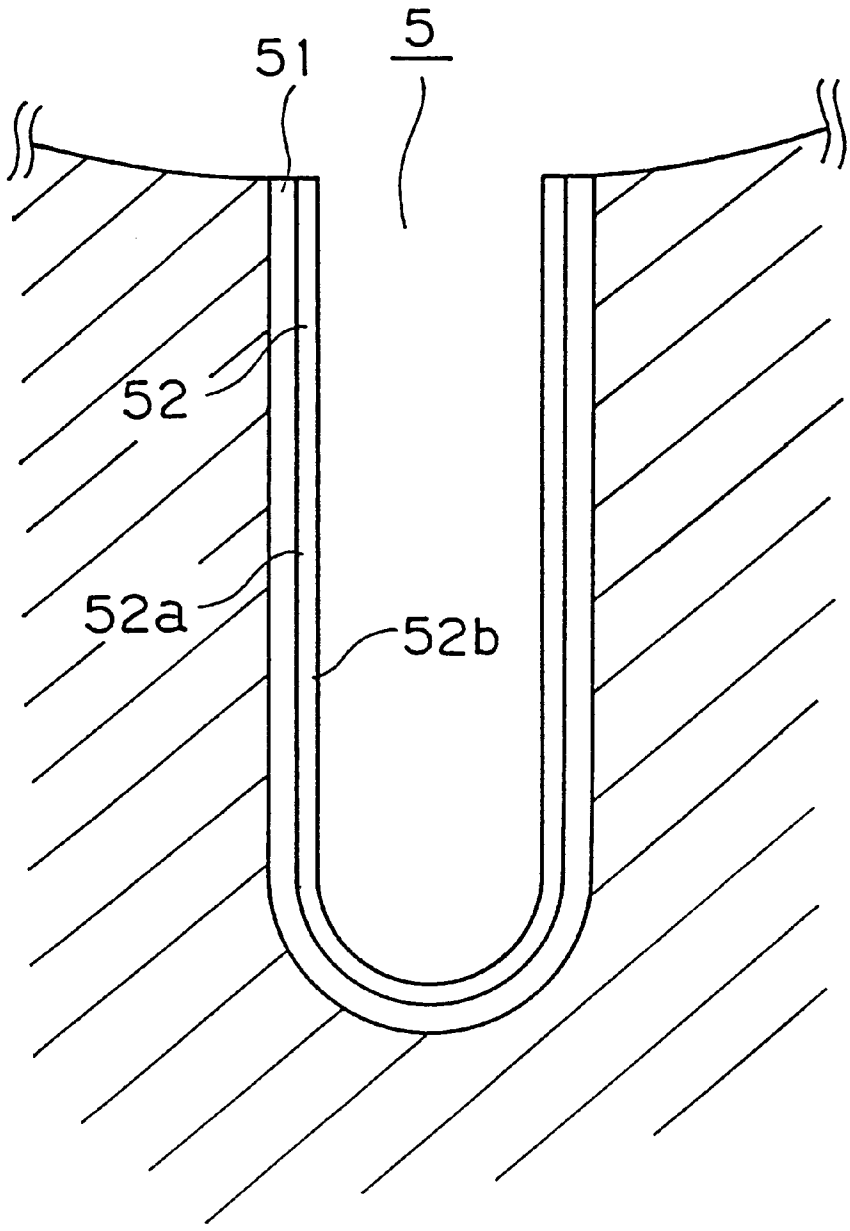

FIG. 4

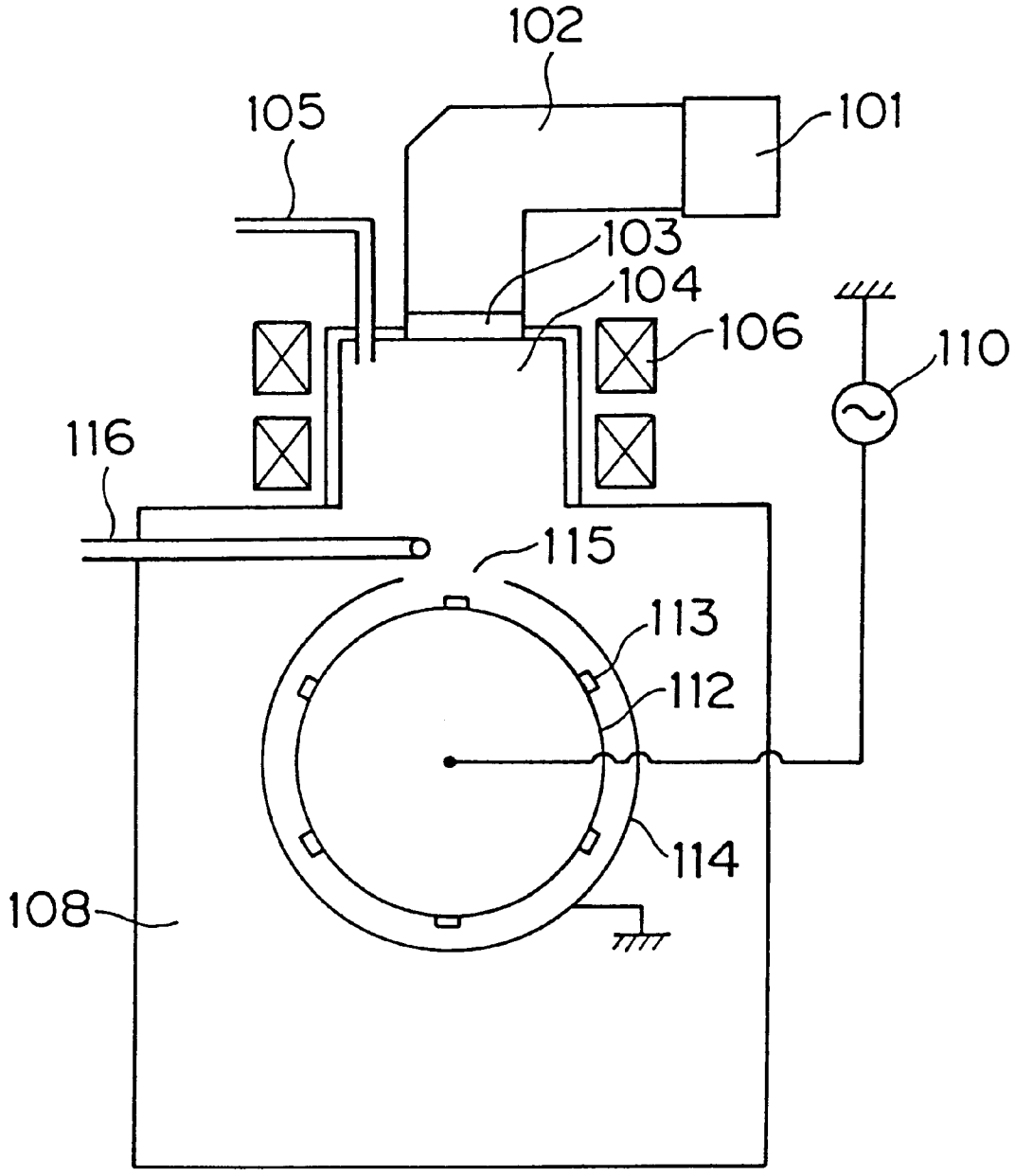

FIG. 5

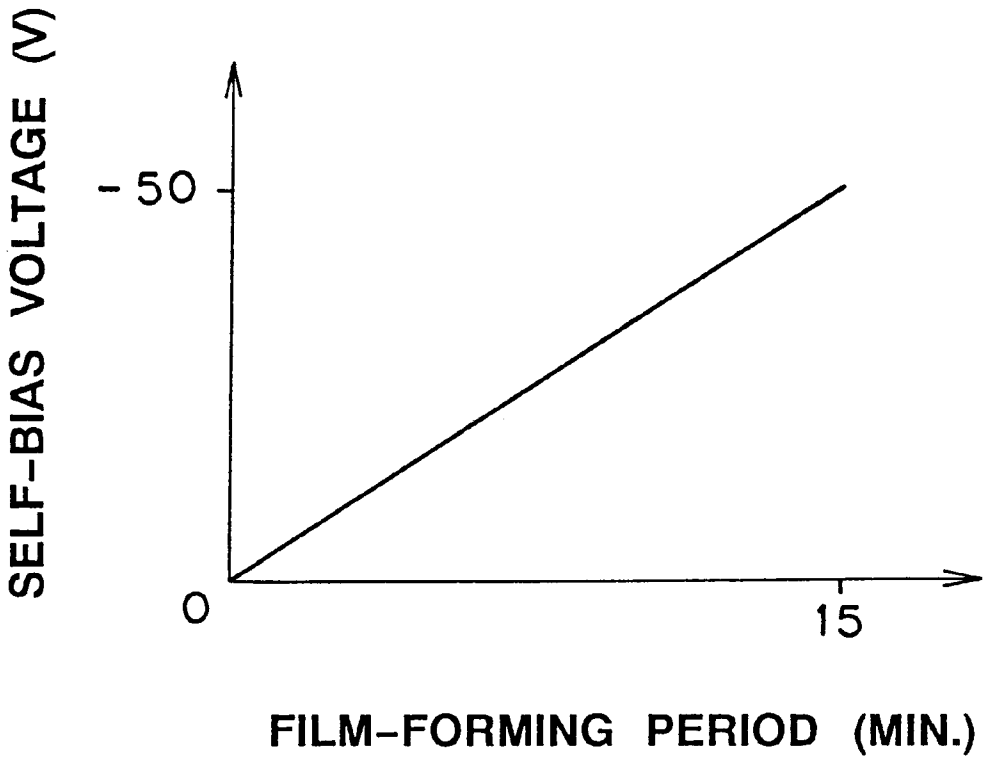

FIG. 6

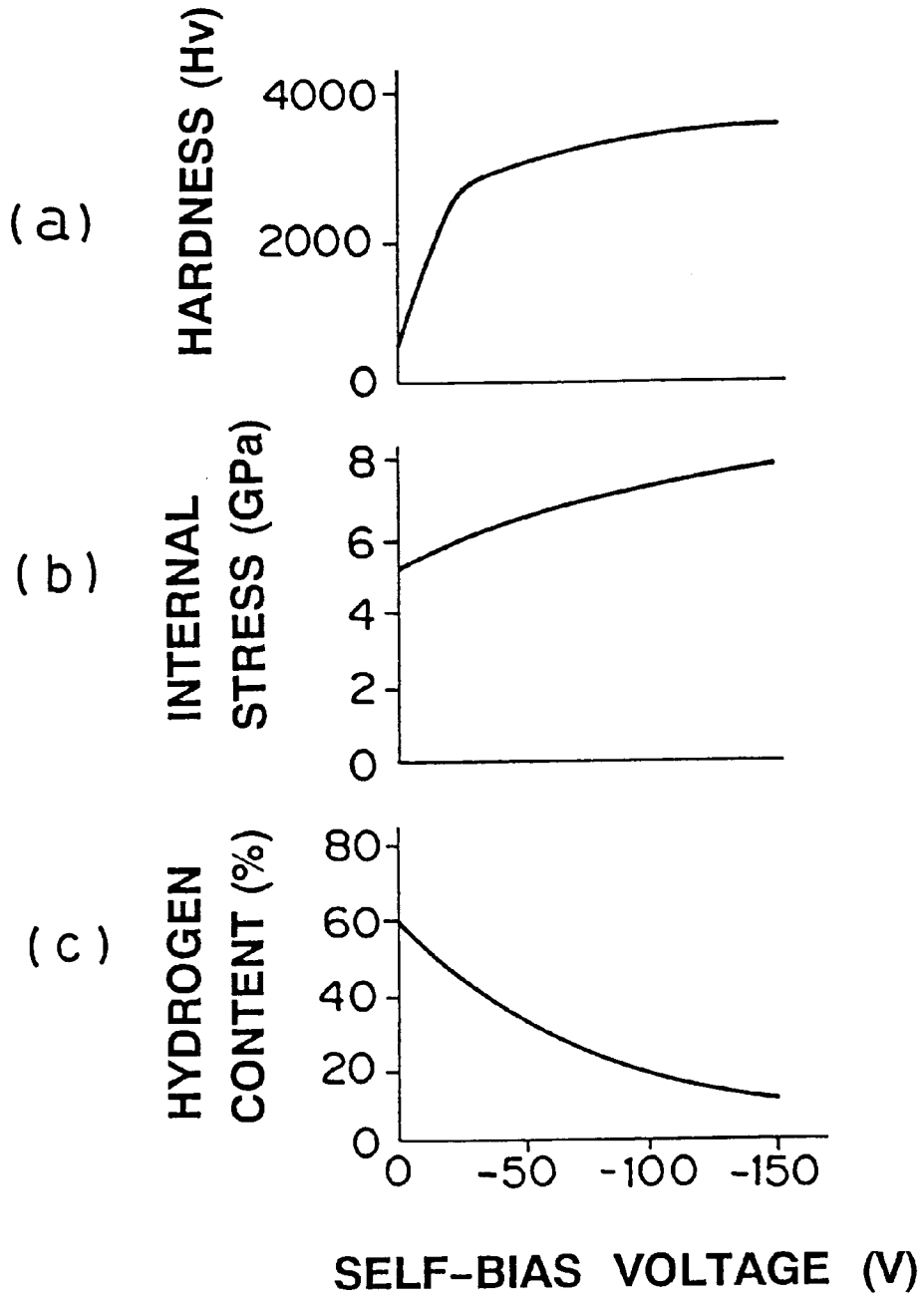
(a)
HARDNESS (Hv)
4000
2000
0
(b)
INTERNAL STRESS (GPa)
8
6
4
2
0
(c)
HYDROGEN CONTENT (%)
80
60
40
20
0
0
-50
-100
-150
SELF-BIAS VOLTAGE (V)

FIG. 7

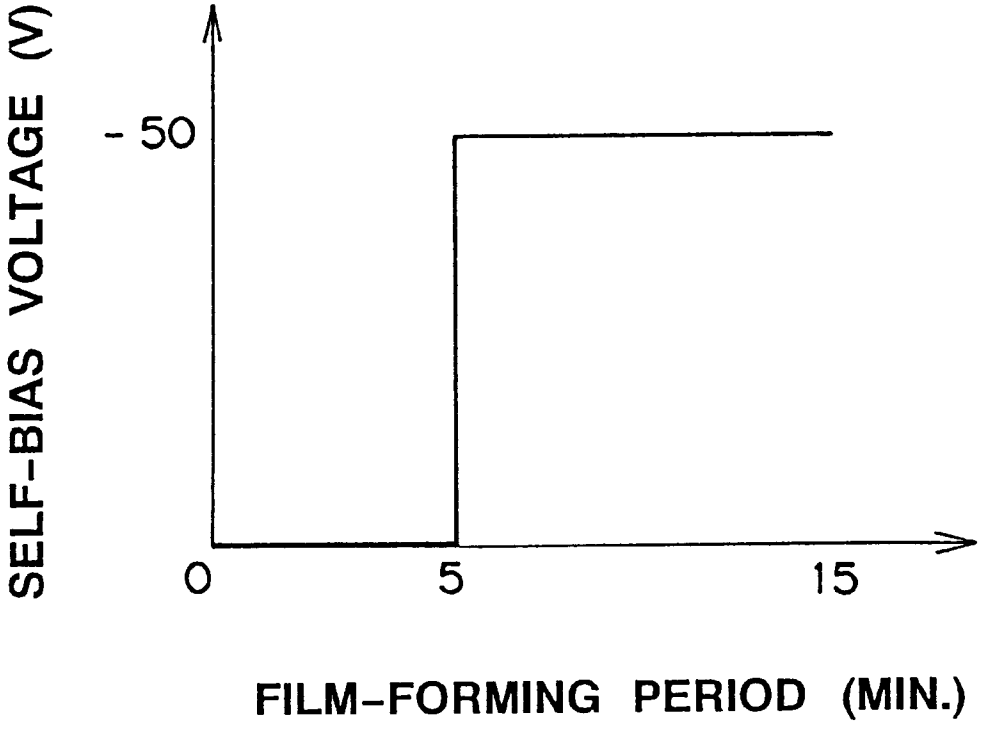

FIG. 8

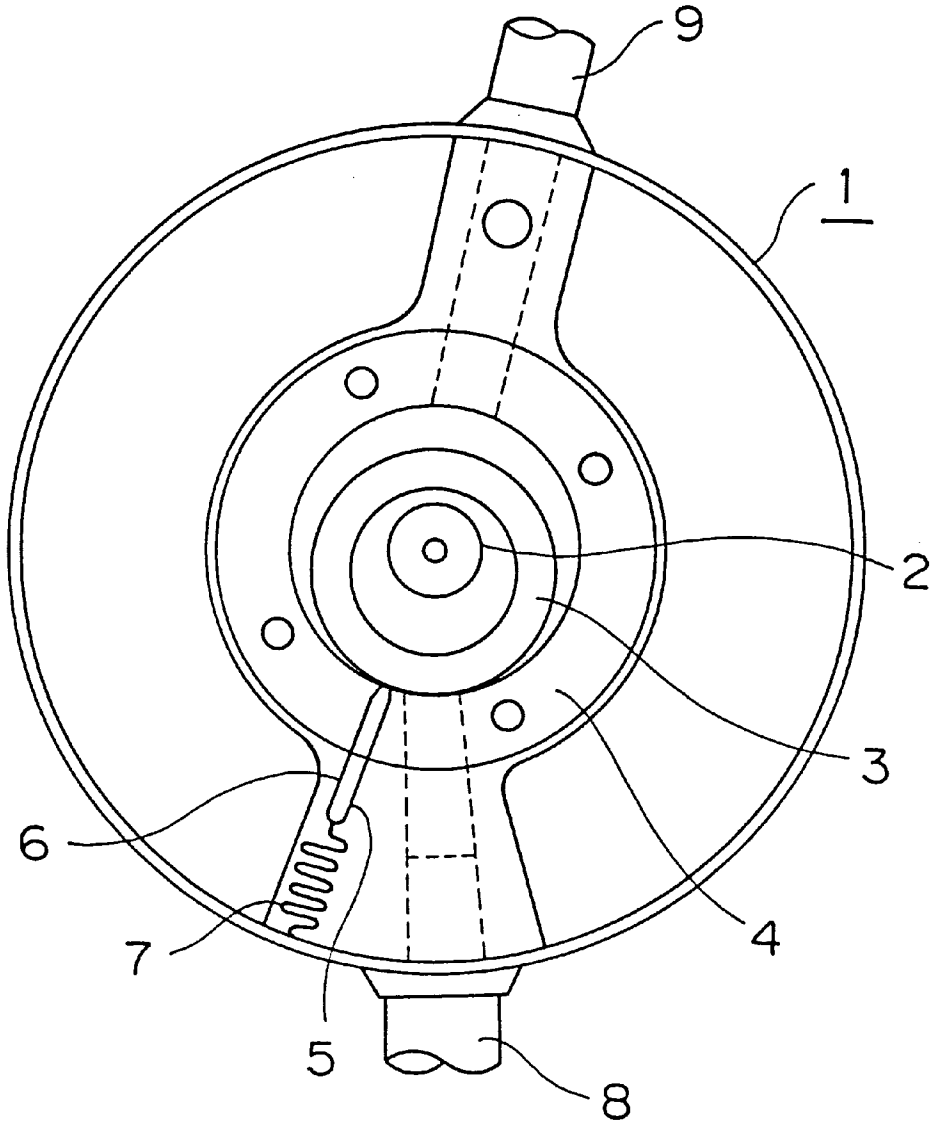

FIG. 9

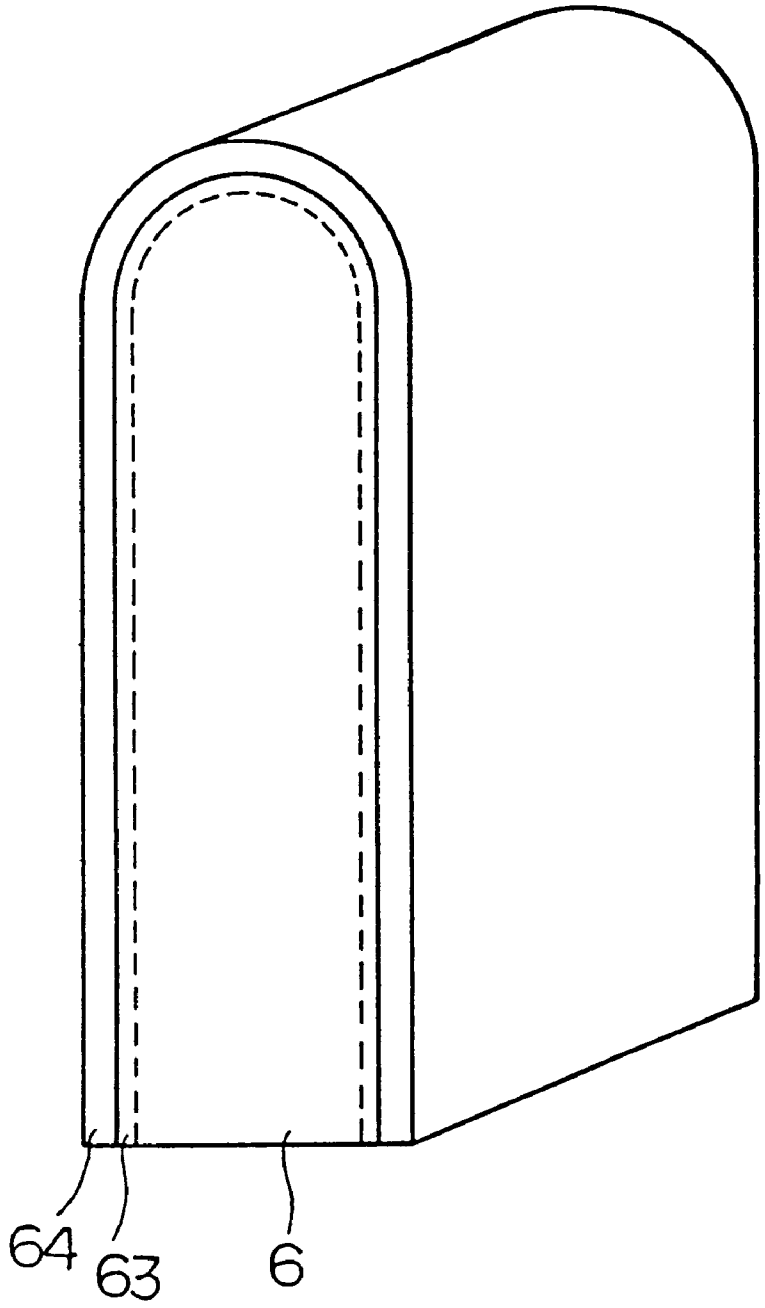

FIG. 10

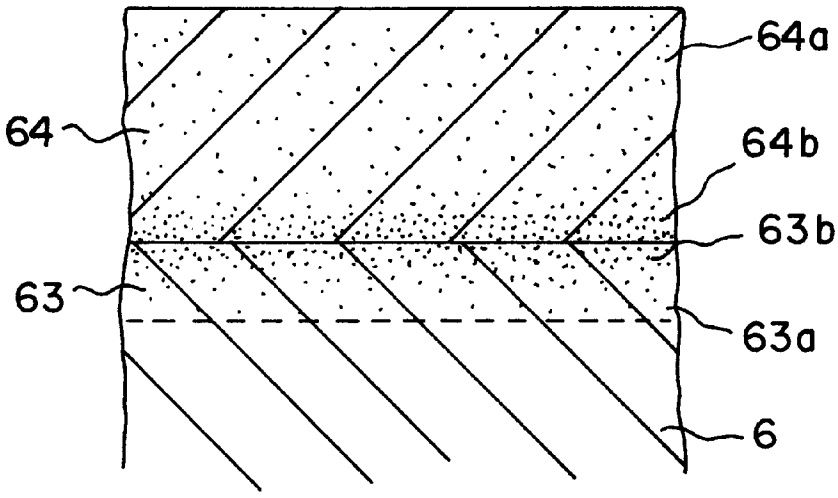
64a
64
64b
63b
63
63a
6

FIG. 11

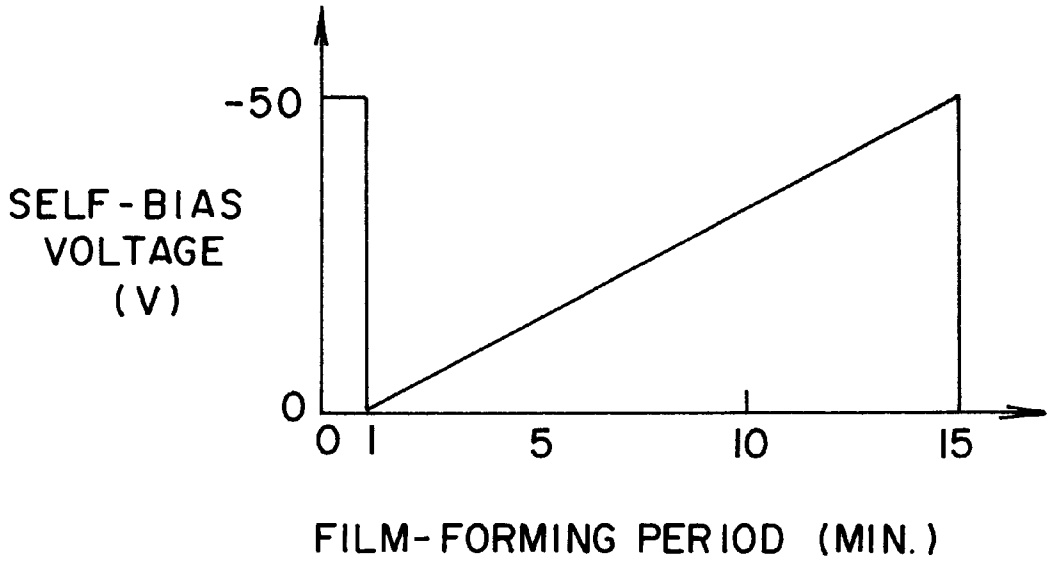
-50
SELF-BIAS VOLTAGE (V)
0
0 1
5
10
15
FILM-FORMING PERIOD (MIN.)

FIG. 12

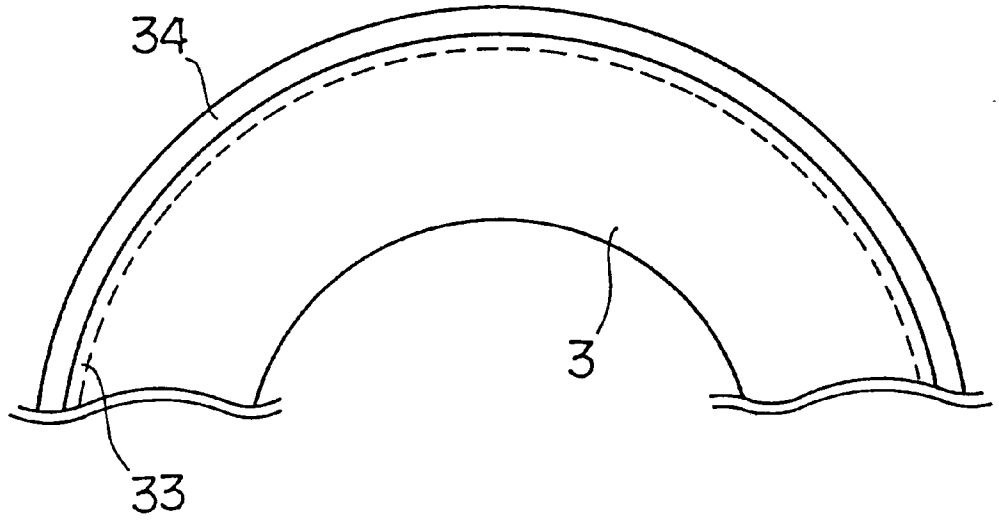

FIG. 13

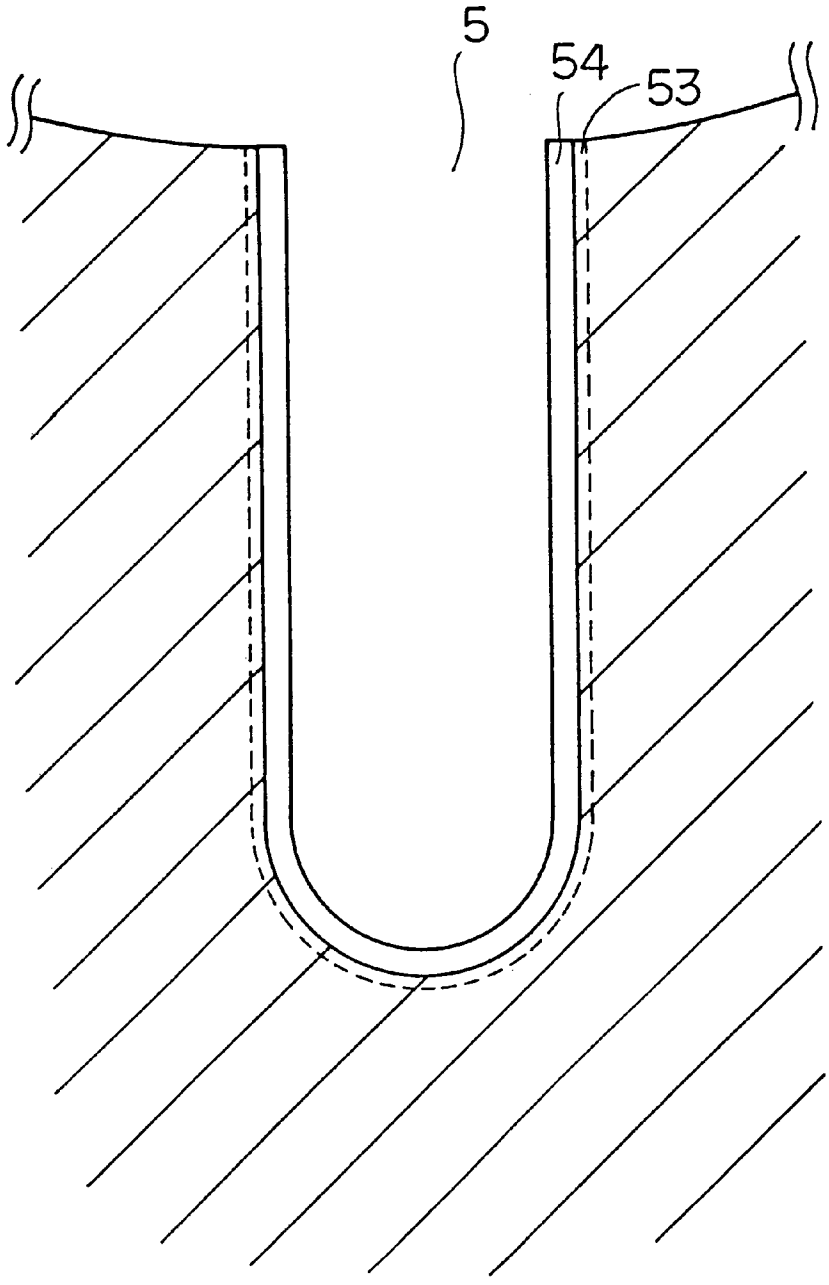

FIG. 14

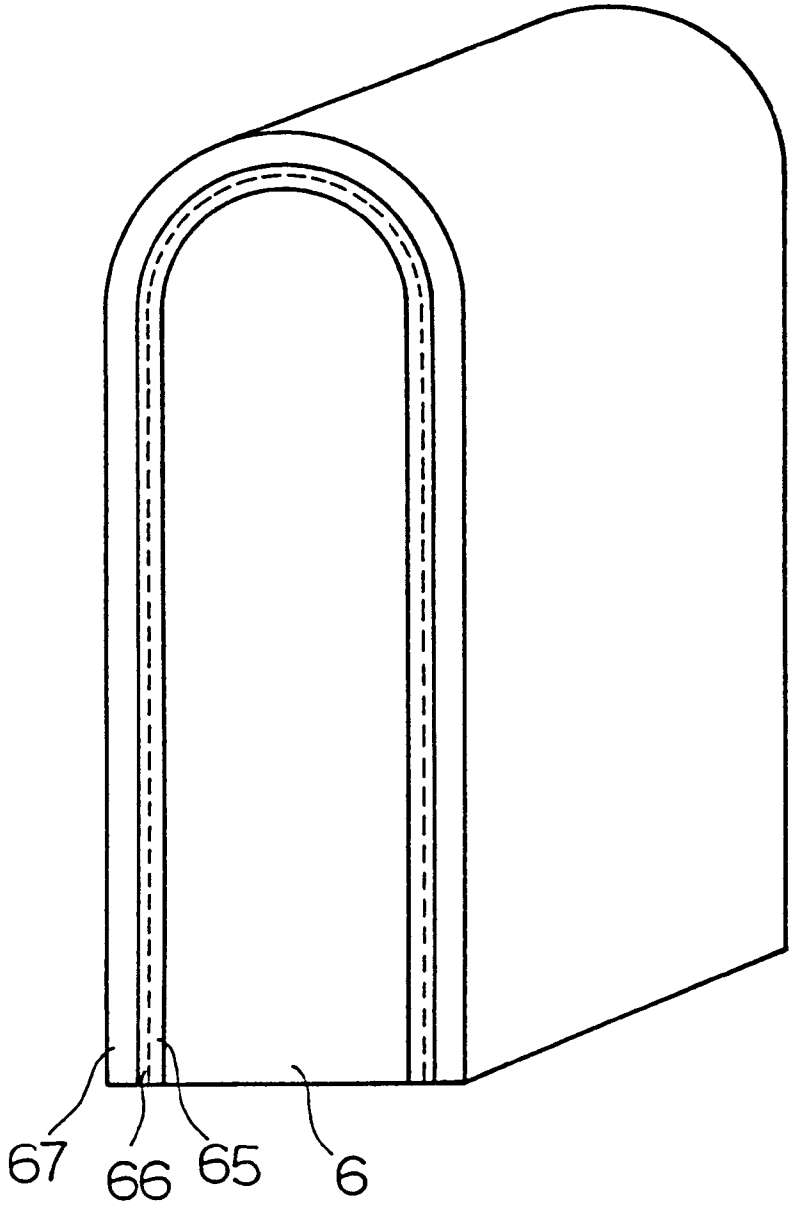

FIG. 15

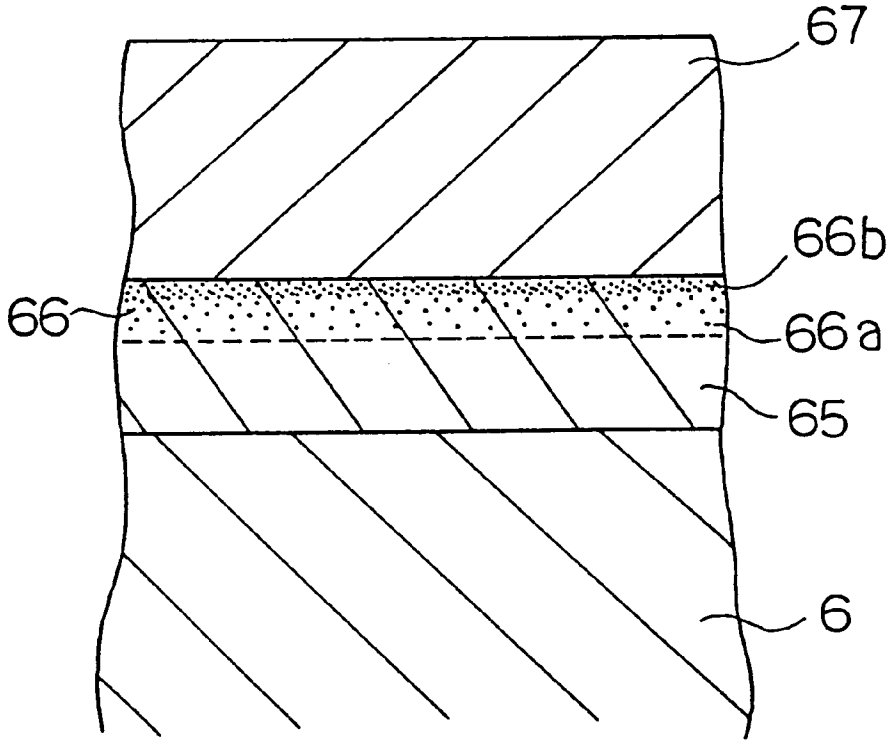

FIG. 16

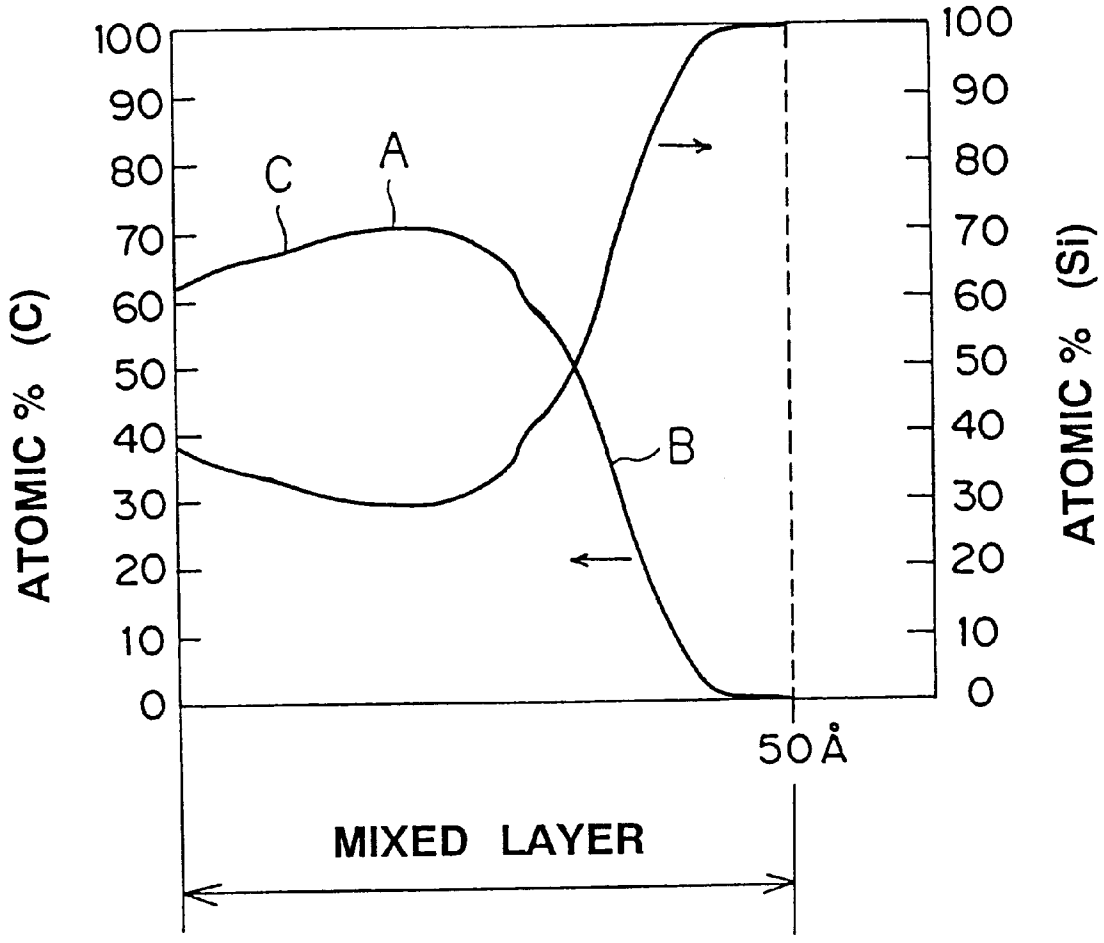
100
90
80
70
60
50
40
30
20
10
0
ATOMIC % (C)
C
A
B
50Å
MIXED LAYER
ATOMIC % (Si)

FIG. 17

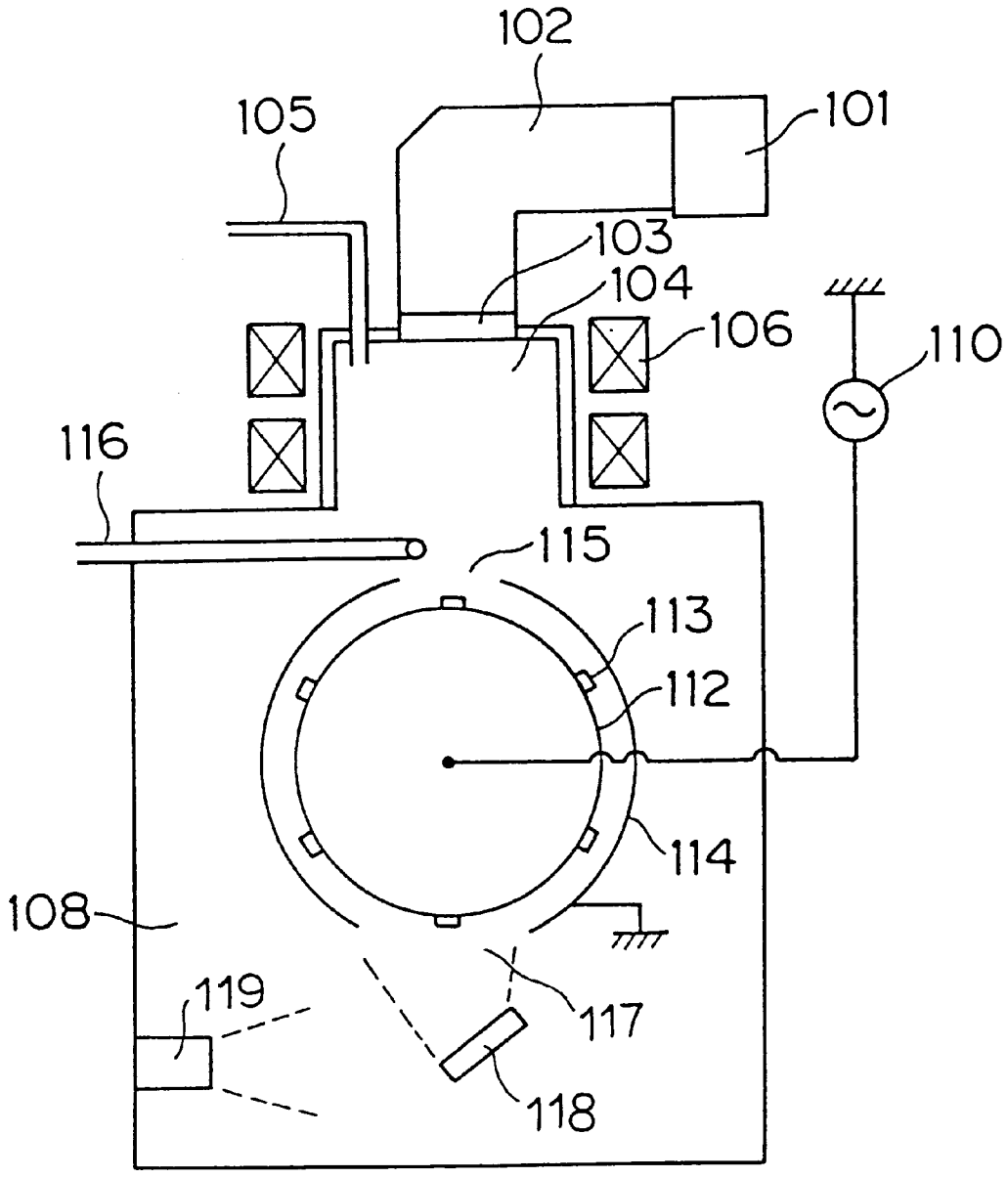

FIG. 18

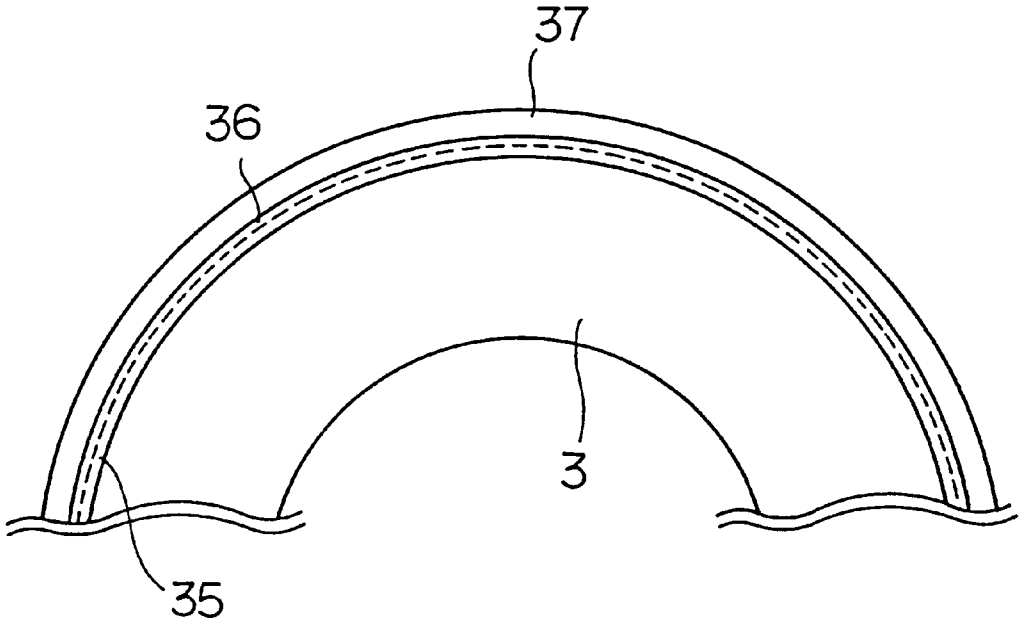

FIG. 19

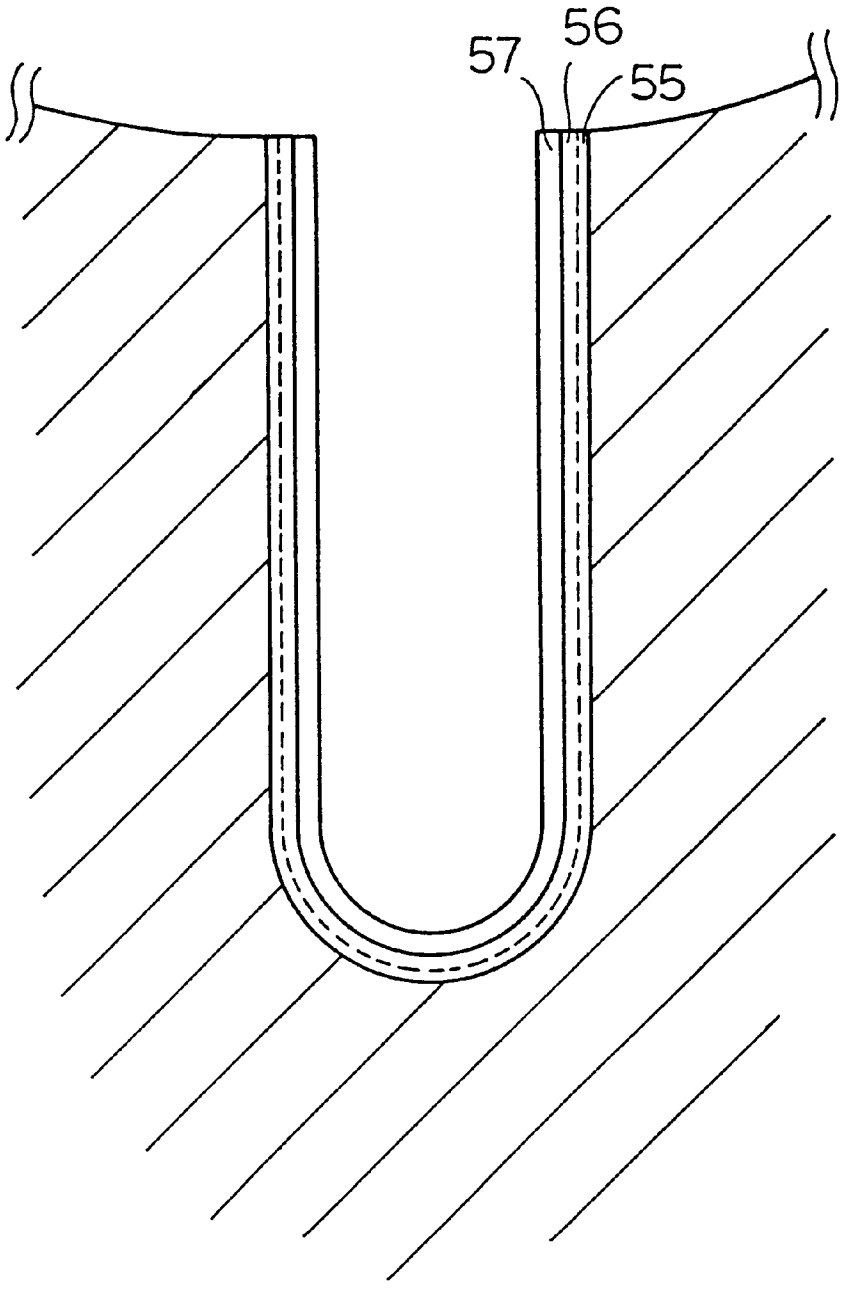

FIG. 20

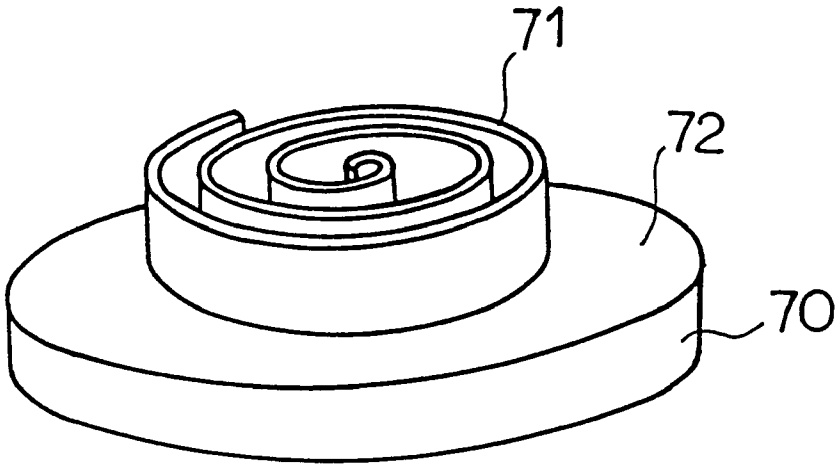

MEMBER HAVING SLIDING CONTACT SURFACE, COMPRESSOR AND ROTARY COMPRESSOR

BACKGROUND OF THE INVENTION

1. Field of the Invention

The present invention relates to a member having a sliding contact surface, a compressors and a rotary compressor respectively incorporating the member.

2. Description of Related Art

The rotary compressors for use in refrigerating facilities, air-conditioning equipments and the like have been placed under heavier duty conditions with their recent improvements in performance and capability.

In such rotary compressors, a leading end of a vane is brought into constant contact with a peripheral sliding portion of a roller such as by biasing means. This disadvantageously produces sludges interior of a cylinder housing the vane and the roller. These sludges cause blockages in a refrigeration system, specifically in a capillary tube to result in a reduced refrigeration capability of the system.

When the situation goes worst, it possibly becomes impossible to supply a refrigerant carrier through the capillary tube to thereby give a destructive damage to the rotary compressor.

Accordingly, there remains a need to provide a member having a sliding contact surface, such as for use in compressors, rotary compressors and the like, which produces less sludges and has an improved wear resistance relative to conventional members and which can be steadily used for a prolonged period of time.

SUMMARY OF THE INVENTION

It is an object of the present invention to provide a member having a sliding contact surface which has a superior wear resistance and is steadily workable for a long period of time, and to provide a compressor and a rotary compressor using such a member.

In accordance with a first aspect of the present invention, a member is provided which includes a main body having a sliding contact surface, a hard carbon film provided on the sliding contact surface and a mixed layer formed within a thickness region of the main body adjacent to the sliding contact surface. The mixed layer is comprised of carbon and a constituent element present in the thickness region of the main body and has a carbon content gradient in its thickness direction so that a carbon content in a thickness portion thereof closer to an outer surface of the mixed layer is higher than in a thickness portion thereof remoter from the outer surface of the mixed layer.

In a preferred embodiment of the invention in accordance with the first aspect, the mixed layer is formed by introducing carbon into the region within the main body and adjacent to the sliding contact surface thereof.

The member in accordance with the first aspect has the hard carbon film on the sliding contact surface to exhibit an excellent wear resistance. Also, the formation of the mixed layer adjacent to the sliding contact surface of the main body provides a good adherence of the main body to the hard carbon film so that the member can be steadily used for a prolonged period of time without experiencing delamination.

In accordance with a second aspect of the present invention, a member is provided which includes a main body having a sliding contact surface, an interlayer provided on the sliding surface of the main body, a hard carbon film provided on the interlayer and a mixed layer formed within a thickness region of the interlayer and adjacent to an outer surface of the interlayer. The mixed layer is comprised of carbon and a constituent element of the interlayer and has a graded carbon content in its thickness direction so that a carbon content in a thickness portion closer to an outer surface of the mixed layer is higher than in a thickness portion remoter from the outer surface of the mixed layer.

In a preferred embodiment in accordance with the second aspect, the mixed layer is formed by introducing carbon into an interlayer region adjacent to the outer surface of the interlayer.

The interlayer may be formed of Si, Ti, Zr, Ge, Ru, Mo, W, or oxides, nitrides or carbides thereof, for example.

The member in accordance with the second aspect provides the hard carbon film on the sliding contact surface through the interlayer to exhibit a superior wear resistance. The formation of the interlayer between the hard carbon film and the main body provides an improved adhesion between the hard carbon film and the main body. Also, the formation of the mixed layer within the interlayer adjacent to its outer surface imparts a further improvement in the adhesion of the hard carbon film.

The term "present invention" will be hereinafter used to explain the matters common to the first and second aspects of the present invention.

In the present invention, the mixed layer is formed adjacent to the sliding contact surface of the main body or to the outer surface of the interlayer. The thickness of the mixed layer is preferably not less than 5 Å, more preferably in the range of 5 Å–1 μm, still more preferably in the range of 10 Å–200 Å. If the mixed layer is thinner, the expected improvement in adhesion may not result. If the thickness of the mixed layer exceeds 1 μm, the adhesion can not be necessarily improved in proportion to the thickness increment.

In the present invention, the mixed layer has a carbon content gradient in its thickness direction so that a carbon content in a thickness portion thereof adjacent or closer to its outer surface is higher than in a thickness portion thereof opposite to or remoter from its outer surface. The mixed layer has a concentrated portion having a maximum carbon content within the mixed layer. Such a concentrated portion is preferably present on the outer surface of the mixed layer or within a thickness region occupying 50% or less of a total thickness of the mixed layer from its outer surface. The carbon content in the concentrated portion of the mixed layer is preferably not smaller than 20 atomic percent, more preferably not smaller than 40 atomic percent.

As described above, it is preferable to form the mixed layer by introducing carbon into the region within the main body adjacent to its outer surface or into the region within the interlayer adjacent to its outer surface. Such an introduction of carbon can be effected by imparting a kinetic energy to active species of carbon such as carbon ions and allowing them to strike on the outer surface of either the main body or the interlayer. Specifically, the carbon introduction can be effected by allowing the carbon ions to strike on an outer surface of a substrate to which a negative self-bias voltage is being applied.

The hard carbon film in the present invention may comprise a diamond thin film, a film having a mixed diamond and amorphous structure, or an amorphous thin carbon film. The film having the mixed structure and the amorphous

carbon film are those generally termed as diamond-like carbon films. The diamond-like carbon film generally contains hydrogen. The diamond-like film with a smaller hydrogen content exhibits an increased hardness and improved wear resistance. On the other hand, the diamond-like carbon film with a larger hydrogen content exhibits an reduced internal stress and improved adherence to an underlayer. It is accordingly preferred that the hard carbon film in accordance with the present invention has a hydrogen content gradient in its thickness direction so that a hydrogen content in a thickness portion thereof remoter from its outer surface is higher than in a thickness portion thereof closer to its outer surface. The provision of such a hydrogen content gradient imparts to the resulting hard carbon film the improved wear resistance and adherence to the underlayer. In the present invention, the hard carbon film may contain at least one additive element selected from the group consisting of Si, N, Ta, Cr, F and B. The inclusion of such an additive element results in a reduced friction coefficient and enhanced wear resistance of the hard carbon film. The inclusion of the additive element is preferably in the range of 3–60 atomic percent, more preferably in the range of 10–50 atomic percent. It is also preferred that the hard carbon film has a content gradient of the additive element in its thickness direction so that a content of the additive element in a thickness portion of the hard carbon film adjacent to its outer surface is higher than in a thickness portion thereof remoter from its outer surface. The provision of such a content gradient within the hard carbon film reduces the friction coefficient of the thickness portion adjacent to its outer surface and thereby enhances its wear resistance film more effectively.

The compressor of the present invention is characterized by employing the above-described member having a sliding contact surface of the present invention. In an exemplary case of a reciprocating compressor having a cylinder and a piston, the present invention is applicable to the cylinder having an inner peripheral surface for providing a sliding contact surface, and/or the piston having an outer peripheral surface for providing a sliding contact surface. In accordance with the first aspect, the hard carbon film is provided on the inner peripheral surface of the cylinder and the mixed layer is formed within the cylinder adjacent to its inner peripheral surface. The hard carbon film is also formed on the outer peripheral surface of the piston and the mixed layer is formed within the piston adjacent to its outer peripheral surface. In accordance with the second aspect, the interlayer is placed on the inner peripheral surface of the cylinder. The mixed layer is formed within the interlayer adjacent to its outer surface and the hard carbon film is provided on the interlayer. In case of the piston, the interlayer is placed on the outer peripheral surface of the piston. The mixed layer is formed within the interlayer adjacent to its outer surface and the hard carbon film is provided on the interlayer.

In one embodiment of the rotary compressor in accordance with the present invention, a vane constitutes a main body of the member of the present invention to define a sliding contact surface at its leading end or side portion. In the first aspect, a hard carbon film is provided at least on the leading end or side portion of the vane. A mixed layer is formed within the vane adjacent at least to an outer surface of the leading end or side portion of the vane. In the second aspect, an interlayer is provided at least on the leading end or side portion of the vane, and the hard carbon film is provided on the interlayer. The mixed layer is formed within the interlayer adjacent to its outer surface.

In another embodiment of the rotary compressor in accordance with the present invention, a roller constitutes a main body of the member of the present invention to define a sliding contact surface at its outer peripheral surface. In the first aspect, a hard carbon film is provided at least on the outer peripheral surface. A mixed layer is formed within the roller adjacent to its outer peripheral surface. In the second aspect, an interlayer is provided on the outer peripheral surface of the roller, and the hard carbon film is provided on the interlayer. A mixed layer is formed within the interlayer adjacent to its outer surface.

In still another embodiment of the rotary compressor in accordance with the present invention, a cylinder constitutes a main body of the member of the present invention to define a sliding contact surface at an inner surface of a cylinder channel. In the first aspect, a hard carbon film is provided on the inner surface of the cylinder channel. A mixed layer is formed within the cylinder wall adjacent to the inner surface of the cylinder channel. In the second aspect, an interlayer is provided on the inner surface of the cylinder channel, and the hard carbon film is provided on the interlayer. A mixed layer is formed within the interlayer adjacent to its outer surface.

The rotary compressor in accordance with a third aspect of the present invention includes a roller, a cylinder and a vane. A hard carbon film is formed on at least a leading end or side portion of the vane, an outer peripheral surface, or an inner surface of a cylinder channel.

In the third aspect, an interlayer may be formed between the hard carbon film and any of the vane, the outer peripheral surface of the roller and the inner surface of the cylinder channel. The types of the interlayer materials employed in the above second aspect may be applicable to the interlayer in the third aspect.

Again, in the third aspect, the hard carbon film may contain hydrogen. If that is the case, it is preferred that the hard carbon film has a hydrogen content gradient in its thickness direction so that a hydrogen content in a thickness portion thereof remoter from its outer surface is higher than in a thickness portion thereof closer to its outer surface.

Again, in the third aspect, the hard carbon film may contain at least one additive element selected from the group consisting of Si, N, Ta, Cr, F and B. It is preferred that the hard carbon film has a content gradient of the additive element in its thickness direction so that a content of the additive element in a thickness portion thereof adjacent to its outer surface is higher than in a thickness portion thereof remoter from its outer surface.

In the present invention, the material types of the main body of the member is not particularly specified and includes Fe-based alloys, cast irons (Mo—Ni—Cr cast irons), steels (high-speed tool steels), aluminum alloys, carbons (aluminum impregnated carbons), ceramics (oxides, nitrides and carbides of Ti, Al, Zr, Si, W, and Mo), Ni alloys, and stainless steels.

In accordance with the present invention, the hard carbon film having a high hardness can be formed on a substrate in a manner to be securedly adhered thereto. Therefore, the member of the present invention exhibits the improved wear resistance and can be steadily used for a prolonged period of time.

The compressors and rotary compressors incorporating such a member produces less sludges even after their prolonged drives so that they can be steadily employed for a prolonged period of time.

BRIEF DESCRIPTION OF THE DRAWINGS

FIG. **1** is a schematic cross-sectional view showing one embodiment in accordance with a third aspect of the present invention;

FIG. **2** is a schematic cross-sectional view showing another embodiment in accordance with the third aspect of the present invention;

FIG. **3** is a schematic cross-sectional view showing still another embodiment in accordance with the third aspect of the present invention;

FIG. **4** is a schematic cross-sectional view of an exemplary ECR plasma CVD apparatus as employed in the embodiments in accordance with the present invention;

FIG. **5** is a graph showing the relation between the film-forming period and the self-bias voltage in the embodiments in accordance with the present invention;

FIGS. **6**(*a*) through **6**(*c*)are graphs showing the relations of the self-bias voltage respectively to the hardness, internal stress and hydrogen content;

FIG. **7** is a graph showing the relation between the film-forming period and the self-bias voltage in the embodiments in accordance with the present invention;

FIG. **8** is a schematic cross-sectional view showing a general structure of a rotary compressor;

FIG. **9** is a schematic cross-sectional view showing one embodiment in accordance with a first aspect of the present invention;

FIG. **10** is an enlarged cross-sectional view showing a vane of the embodiment shown in FIG. **9** and its vicinities;

FIG. **11** is a graph showing the relation between the film-forming period and the self-bias voltage in the embodiments in accordance with the present invention;

FIG. **12** is a schematic cross-sectional view showing another embodiment in accordance with the first aspect of the present invention;

FIG. **13** is a schematic cross-sectional view showing still another embodiment in accordance with the first aspect of the present invention;

FIG. **14** is a schematic cross-sectional view showing one embodiment in accordance with a second aspect of the present invention;

FIG. **15** is an enlarged cross-sectional view showing a vane of the embodiment shown in FIG. **14** and its vicinities;

FIG. **16** are graphs showing composition gradients in a thickness direction of a mixed layer in the embodiments in accordance with the present invention;

FIG. **17** is a schematic cross-sectional view of another exemplary ECR plasma CVD apparatus as employed for the embodiments in accordance with the present invention;

FIG. **18** is a schematic cross-sectional view showing another embodiment in accordance with the second aspect of the present invention;

FIG. **19** is a schematic cross-sectional view showing still another embodiment in accordance with the second aspect of the present invention; and

FIG. **20** is a perspective view of a scroll for use in a scroll type compressor.

DESCRIPTION OF THE PREFERRED EMBODIMENTS

FIG. **8** is a schematic cross-sectional view showing a general construction of a rotary compressor.

Referring to FIG. **8**, the rotary compressor includes a closed container **1**, a crank shaft **2** driven by an electric motor (not shown), a roller mounted eccentric to the crank shaft. The roller **3** is made of Mo—Ni—Cr cast iron.

A hollow cylinder **4** of cast iron is disposed to accommodate the roller **3** therein.

The hollow cylinder **4** has a channel **5** within which a vane **6**, as hereinafter described, reciprocates. The vane **6** partitions a space interior of the hollow cylinder **4** into a high-pressure part and a low-pressure part. The vane **6** is made of high-speed tool steel (SKH51).

The vane **6** is urged against the roller **3** by a spring **7**.

An inlet tube **8** is provided to supply a refrigerant carrier into the interior of the hollow cylinder **4**. The refrigerant carrier pressurized and heated within the hollow cylinder **4** is exhausted through an exhaust tube **9**.

The operation of the rotary compressor as constructed in the manner as described above will be now explained.

When the electric motor drives the crank shaft **2**, the roller **3** mounted eccentric to the crank shaft **2** moves circumferentially along an inner surface of the hollow cylinder **4** while rotating. Since the vane **6** is urged against the roller **3** by both a pressurized gas and the spring **7**, the vane **6** is constantly brought into contact with a periphery of the roller **3**. Accordingly, a rotational motion of the roller **3** is translated into a reciprocating motion of the vane **6** within the cylinder channel **5**.

As such a reciprocating motion is continued, the refrigerant carrier is suctioned through the inlet tube **8** into the interior of the hollow cylinder **4** within which it is compressed to increase its temperature and pressure before discharged through the exhaust tube **9** to outside of the rotary compressor.

FIG. **1** is a schematic cross-sectional view of the vane **6** carrying a hard carbon coating film thereon, which can be employed for the rotary compressor of the present invention.

In practicing the present invention, the hard carbon film may be in the form of a diamond thin film, a thin film having a mixed diamond and amorphous carbon structure, or an amorphous carbon thin film.

The interlayer may be formed of Si, Ti, Zr, Ge, Ru, Mo, W, or, oxides, nitrides or carbides thereof.

In the embodiment as shown in FIG. **1**, an interlayer **61** of Si is formed on the vane **6**. A hard carbon film **62** is formed on the interlayer **61** to define an interface therebetween. The hard carbon film **62** has a composition for better adherence onto the vane **6**.

More preferably, the hard carbon film **62** may have a graded composition such that a hydrogen content therein decreases continuously from a portion **62***a* adjacent to the interface to an outer surface of a film layer **62***b*.

Since the hydrogen content is higher toward the portion **62***a* adjacent to the interface, a thickness portion of the hard carbon film **62** adjacent or closer to the interlayer **61** has reduced internal stress and hardness. This serves to prevent the hard carbon film **62** from delaminating from the interlayer **61**.

Although the hydrogen content is above described to be continuously varied in a thickness direction of the hard carbon film **62**, such a hydrogen content gradient may be rendered stepwise by providing a hydrogen-richer layer(s) and a hydrogen-poorer layer(s) in the hard carbon film **62**.

FIG. **2** is a schematic cross-sectional view of the roller **3** carrying thereon a hard carbon film, which can be employed for the rotary compressor of the present invention.

FIG. **2** also shows one applicable form of the hard carbon film in accordance with the present invention.

In the embodiment as shown in FIG. **2**, formed on the roller **3** is an interlayer **31** of Si. A hard carbon film **32** is formed on the Si interlayer **31** to define an interface ther-

ebetween. The hard carbon film **32** has a composition for better adherence to the roller **3**.

More preferably, the hard carbon film **32** may have a graded composition such that a hydrogen content therein decreases continuously from a portion **32***a* adjacent to the interface to a film layer **32***b*.

Since the hydrogen content is higher toward the portion **32***a* adjacent to the interface, a thickness portion of the hard carbon film **32** closer to the interlayer **31** has reduced internal stress and hardness. This serves to prevent the hard carbon film **32** from delaminating from the interlayer **31**.

Although the hydrogen content is above described to be continuously varied in a thickness direction of the hard carbon film **32**, such a hydrogen content gradient may be rendered stepwise by providing a hydrogen-richer layer(s) and a hydrogen-poorer layer(s) in the hard carbon film **32**.

FIG. **3** is an enlarged cross-sectional view of the cylinder channel **5** carrying thereon a hard carbon film, which can be employed for the rotary compressor of the present invention.

FIG. **3** also shows another applicable form of the hard carbon film in accordance with the present invention.

In the embodiment shown in FIG. **3**, formed on an inner surface of a cylinder channel **5** is an interlayer **51** consisting of Si. A hard carbon film **52** is formed on the interlayer **51** to define an interface therebetween. The hard carbon film **52** has a composition for better adherence to the inner surface of the cylinder channel **5**.

More preferably, the hard carbon film **52** may have a graded composition such that a hydrogen content therein is continuously reduced from a portion **52***a* adjacent to the interface to a film layer **52***b*.

Since the hydrogen content is higher toward the portion **52***a* adjacent to the interface, a thickness portion of the hard carbon film **52** closer to the interlayer **51** has reduced internal stress and hardness. This serves to prevent the hard carbon film **52** from delaminating from the interlayer **51**.

Although the hydrogen content is above described to be continuously varied in a thickness direction of the hard carbon film **52**, such a hydrogen content gradient may be rendered stepwise by providing a hydrogen-richer layer(s) and a hydrogen-poorer layer(s) in the hard carbon film **52**.

FIG. **4** is a schematic diagram of an exemplary ECR plasma CVD apparatus which can be employed to form the hard carbon film in the present invention.

Referring to FIG. **4**, disposed interior of a vacuum chamber **108** are a plasma generation chamber **104** and a reaction chamber within which substrates, such as vanes **113** are positioned. One end of a waveguide **102** is connected to the plasma generation chamber **104**. Another end of the waveguide **102** is mounted to a microwave supplying means **101**.

The microwaves generated within the microwave supplying means **101** pass through the waveguide **102** and a microwave inlet window **103** to be guided into the plasma generation chamber **104**.

Connected to the plasma generation chamber **104** is a discharge gas inlet line **105** for introducing a discharge gas such as argon (Ar) into the plasma generation chamber **104**. A plurality of plasma magnetic field generators **106** are mounted circumferentially of the plasma generation chamber **104**.

A drum-shaped vane holder **112** is provided within the reaction chamber in the vacuum chamber **108** so as to be rotatable about an axis which perpendicularly crosses a page surface of the drawing. A motor (not shown) is connected to the vane holder **112**.

A plurality of vanes **113** (twenty four in this embodiment) are arranged circumferentially of the vane holder **112** at regular intervals. A high-frequency power source **110** is connected to the vane holder **112**. A hollow cylindrical shielding cover **114**, made of metal, radially surrounds the vane holder **112** to define therebetween a spacing of about 5 mm. The shielding cover **114** is connected to a grounded electrode. The shielding cover **114** functions to prevent generation of discharges between the vacuum chamber **108** and a vane holder area excluding target film-forming locations thereon, which discharges will be otherwise generated when a radio frequency (RF) voltage is applied to the vane holder **112** for film formation.

The shielding cover **114** has an opening **115**. A plasma from the plasma generation chamber **104** is directed to pass through the opening **115** to impact the vanes **112** mounted on the vane holder **112**. The vacuum chamber **108** is equipped with a reaction gas inlet line **116**. A leading end of the reaction gas inlet line **116** is positioned above the opening **115**.

In the case where the hard carbon film **32** is formed on the peripheral surface of the roller **3**, a drum-shaped holder may not be employed. Then, the roller **3** is connected to the high-frequency power source **110**. The shielding cover **114** is configured to be spaced about 5 mm from the roller **3** and is connected to the grounded electrode.

The aforementioned film forming apparatus may be employed to form the hard carbon film of the embodiment shown in FIG. **1** in the following exemplary procedures.

The vacuum chamber **108** is first evacuated to a pressure of 10^{-5}–10^{-7} Torr., followed by rotation of the vane holder **112** at a speed of about 10 rpm. The Ar gas at 5.7×10^{-4} torr. is then supplied from the discharge gas inlet line **105** while a 2.45 GHz, 100 W microwave is supplied from the microwave supplying means **101**, so that an Ar plasma is generated within the plasma generation chamber **104** to strike a surface of each vane **6**.

Simultaneously with the above, a CH_4 gas at 1.3×10^{-3} Torr. is supplied through the reaction gas inlet line **116** while a 13.56 MHz RF power from the high-frequency power source **116** is supplied to the vane holder **112**. Here, the RF power is supplied to the vane holder **112** in a controlled fashion so that a self-bias voltage generated in each of the vanes **113** is varied through a range from 0 V at the start of the film-forming to −50 V at completion of the film-forming (in 15 minutes after the start), as shown in FIG. **5**.

The hard carbon film of 5000 Å thick was formed on each of the vanes **6** in accordance with the aforementioned procedures.

FIG. **6** are graphs showing the relations of the self-bias voltages produced in the vane holder respectively to the hardnesses, internal stresses and hydrogen contents of the hard carbon films formed at those self-bias voltages.

In operating the aforementioned film-forming apparatus of FIG. **4**, a specific self-bias voltage produced in the vane holder was maintained constant to form a hard carbon film at the specific self-bias voltage. The hard carbon film thus obtained was measured for its properties including hardness, internal stress and hydrogen content. The measured values are given in FIG. **6**.

As can be seen from FIG. **6**, the self-bias voltage of 0 V results in the formation of a hard carbon film having a Vickers hardness of about 800 Hv, an internal stress of about 5 GPa, and a hydrogen content of about 60 atomic percent.

On the other hand, the self-bias voltage of −50 V results in the formation of a hard carbon film having a Vickers

hardness of about 3000 Hv, an internal stress of about 6.5 GPa, and a hydrogen content of about 35 atomic percent.

It is believed that the changes in the respective properties as shown in FIG. **6** have been reflected in a thickness direction of the above embodiment of the hard carbon film formed at varied self-bias voltages from 0 to −50 V.

Therefore, the portion **62***a* of the hard carbon film **62** adjacent to the interface has lower hardness and internal stress to exhibit better adherence to the interlayer, and accordingly to the vane **6**.

On the other hand, the film layer **62***b* has a higher hardness to provide an adequate surface hardness as demanded for the hard carbon films.

The hard carbon film **62** was formed in the same manner as in the above embodiment, with the exception that the self-bias voltage was maintained at 0 V during a first 5-minute period from the start of film formation and at −50 V during a subsequent 10-minute period that completed in 15 minutes from the start, as shown in FIG. **7**. The resulting hard carbon film formed on the vane **6** had a film thickness of 5000 Å and a Vickers hardness of 3000 Hv.

For comparative purposes, a hard carbon film was formed in the same manner as in the above embodiment, with the exception that the self-bias voltage produced in the vane holder was maintained at 0 V during the film formation. The resulting hard carbon film formed on the vane **6** had a film thickness of 5000 Å and a Vickers hardness of 800 Hv.

The hard carbon film was tested for adherence. In evaluating the adherence, a constant load (1 kg) indentation test was conducted using a Vickers penetrator. For evaluating the adherence of differently formed hard carbon films, fifty samples were prepared for each and the number of samples which showed the delamination of the hard carbon film **62** from the vane **6** was counted as indicating the level of the adherence thereof. Those hard carbon films subjected to such an evaluation included a hard carbon film which was formed at the varied self-bias voltages from 0 V to −50 V upon the Si interlayer **61** (100 Å thick) previously formed upon the vane **6**, another hard carbon film which omitted the Si interlayer **61** to form directly upon the vane **6** at a constant self-bias voltage of −50 V maintained after the lapse of five minutes from the start of film formation till the completion of film formation, and another hard carbon film which was formed on the Si interlayer **61** at a constant self-bias voltage of −50 V maintained after the lapse of five minutes from the start of film formation till the completion of film formation. The evaluation results are shown in Table 1.

TABLE 1

Si Interlayer	Self-Bias Voltage (V)	Number of Samples Experienced Delamination
Absent	−50	45
Present	−50	5
	0—50	0

As can be seen from Table 1, in the case where the Si interlayer **61** was not formed on the vane **6**, i.e., the hard carbon film **62** was directly formed on the vane **6**, forty five samples thereof were found to delaminate from the vane **6** even though formed at the self-bias voltage of −50 V. On the other hand, in the case where the Si interlayer **61** was formed on the vane **6**, i.e., the hard carbon film **62** was formed on the interlayer **61** at the constant self-bias voltage of −50 V, only five samples thereof were observed to delaminate from the interlayer **61**.

Furthermore, in the case where the Si interlayer **61** was formed on the vane **6**, i.e., the hard carbon film **62** was formed on the Si interlayer **61** at the varied self-bias voltages from 0 V to −50 V, no sample thereof showed delamination.

The above results demonstrate that the hard carbon film for use in the present invention has improved hardness and adherence sufficient to impart a wear-resistance to sliding contact surfaces of various member such as of the vane **6**, roller **3** and cylinder channel **5**. Such a hard carbon film coating serves to reduce sludge production at the sliding contact surfaces of those members.

In the above embodiments, the ECR plasma CVD apparatus is employed to form the hard carbon film. However, it is to be understood that this is not intended to exclude the use of the other suitable techniques for the film formation.

As will be appreciated from the above descriptions, the present invention provides a vane, roller or cylinder channel on which a hard carbon film is formed to impart thereto adequate hardness and chemical stability. Since the hard carbon film can be well adhered to the vane, roller or cylinder channel, a rotary compressor incorporating such components can be operated for a prolonged period of time without producing an appreciable amount of sludge. This prevents the occurrence of its blocking the supply of refrigerant carrier through a capillary tube and performs a protective effect by which a critical damage to the rotary compressor can be avoided.

FIG. **9** is schematic perspective view showing one embodiment in accordance with a first aspect of the present invention. A hard carbon film **64** is formed on a main body of a member in accordance with the present invention, i.e. a vane **6** to define an interface therebetween. A mixed layer **63** is formed in a thickness region of the vane **6** adjacent to the interface.

FIG. **10** is an enlarged schematic cross-sectional view showing the vane **6** of FIG. **9** and its vicinities. As illustrated in FIG. **10**, the mixed layer **63** is formed in the thickness region of the vane **6** adjacent to the interface. The mixed layer **63** is formed of carbon and an constituent element of the vane **6**, e.g. Fe. A carbon content in a thickness portion **63***b* of the mixed layer **63** closer to the interface is made higher than in a thickness portion **63***a* of the mixed layer **63** remoter from the interface to define a carbon content gradient in a thickness direction of the mixed layer **63**. Such a mixed layer **63** can be formed by introducing carbon into the thickness region of the vane **6** adjacent to the interface. The introduction of carbon can be accomplished, for example, by operating the above-described ECR plasma CVD apparatus to cause the vane **6** to produce a negative self-bias voltage at an early stage of film formation.

The hard carbon film **64**, such as a diamond-like carbon film is formed on the mixed layer **63**. Preferably, the hard carbon film has a hydrogen content gradient in its thickness direction so that a hydrogen content in a thickness portion **64***b* thereof remoter from an outer surface of the hard carbon film is higher than in a thickness portion **64***a* thereof closer to the outer surface of the hard carbon film.

The thickness of the mixed layer **63** is preferably not less than 5 Å, more preferably in the range of 10–200 Å.

The apparatus of FIG. **4** was employed to form a hard carbon film. The self-bias voltage produced in the vane was maintained at −50 V during a first one-minute period from the start of the film formation. As shown in FIG. **11**, the self-bias voltage was subsequently dropped to 0 V and varied immediately thereafter such that it increased gradually from 0 V to reach −50 V at the completion of film

formation. During the first one-minute period when the self-bias voltage was maintained at −50 V, the mixed layer is formed within the vane adjacent to an outer surface of the vane. As a result, the hard carbon film was formed on the vane which had a thickness of 5000 Å and a Vickers hardness of 3000 Hv.

The hard carbon film thus formed was subjected to a scratch test for adherence evaluation. A diamond stylus was employed to conduct the test at a scratching speed of 100 mm/min. The maximum load was 500 g. Fifty samples of hard carbon film were tested, and the number of samples which showed delamination was counted as being indicative of a level of adherence of the hard carbon film. No sample was observed to experience delamination.

For comparative purposes, a RF power is applied so that the self-bias voltage produced in the vane was varied from 0 V at the start of film formation to −50 V at the completion of film formation when 15 minutes passed from the start, as shown in FIG. **5**. The comparative hard carbon film thus formed revealed a thickness of 5000 Å and a Vickers hardness of 3000 Hv. The number of samples which experienced delamination was ten out of fifty.

As will be recognized from the above results, the adherence of the hard carbon film to a substrate, such as the vane, can be enhanced by forming an effective thickness of mixed layer in the surface layer of the substrate.

FIG. **12** is a schematic cross-sectional view showing another embodiment in accordance with the first aspect of the present invention. A mixed layer **33** is formed within a roller **3** adjacent to an outer surface of the roller **3**. Again, a carbon content in a thickness portion of the mixed layer **33** closer to its outer surface is higher than in a thickness portion remoter from its outer surface to define a carbon content gradient in the thickness direction of the mixed layer **33**, as analogous to the embodiment shown in FIG. **11**. The mixed layer **33** can be formed in the same manner as in the embodiment of FIG. **11**. A hard carbon film **34** is formed upon the mixed layer **33**.

The formation of the mixed layer **33** adjacent to an outer surface of the roller **3** results in improved adherence of the hard carbon film **34** to the roller **3**.

FIG. **13** is a schematic cross-sectional view showing still another embodiment in accordance with the first aspect of the present invention. A mixed layer **53** is formed in an inner wall of a cylinder channel **5** adjacent to an inner surface of the cylinder channel. As analogous to the embodiment shown in FIG. **11**, the mixed layer **53** has a carbon content gradient in its thickness direction such that a carbon content in a thickness portion of the mixed layer **53** closer to its outer surface is higher than in a thickness portion of the mixed layer **53** remoter from its outer surface. The mixed layer **53** can be formed in the same manner as in the embodiment of FIG. **11**. A hard carbon film **54** is formed on the mixed layer **53**.

The formation of the mixed layer **53** adjacent to the inner surface of the cylinder channel **5** results in improved adherence of the hard carbon film **34** to the inner surface of the cylinder channel **5**.

FIG. **14** is a partly sectioned, schematic perspective view showing an embodiment in accordance with the second aspect of the present invention. Formed upon a vane **6** is an interlayer **65**. A mixed layer **66** is formed within the interlayer **66** adjacent to an outer surface of the interlayer **66**. The mixed layer **66** is formed of carbon and a constituent element of the interlayer **65**. A hard carbon film **67** is formed upon the interlayer **65**.

FIG. **15** is an enlarged schematic cross-sectional view showing the vane **6** of FIG. **14** and its vicinities. As illustrated in FIG. **15**, the mixed layer **66** has a carbon content gradient in its thickness direction such that a carbon content in a thickness portion **66***b* of the mixed layer **63** closer to the outer surface of the mixed layer **66** is higher than in a thickness portion **66***a* of the mixed layer **63** remoter from the outer surface of the mixed layer **63**. Such a mixed layer **66** can be formed in the same manner as the mixed layer **63** of FIG. **10** is formed, i.e., by introducing carbon into the thickness region of the vane **6** adjacent to the outer surface of the interlayer **65**. The introduction of carbon can be accomplished, for example, by operating the above-described ECR plasma CVD apparatus to cause a substrate such as the vane **6** to produce a negative self-bias voltage at an early stage of film formation.

A hard carbon film **67** is formed on the mixed layer **66**. The presence of the mixed layer **66** contributes to the improved adherence of the hard carbon film **67** to the interlayer **65**.

In this second aspect, if the mixed layer is desired to be made thicker than the interlayer, the mixed layer may also be formed in the underlying substrate adjacent to its surface so that it extends through the interlayer into the substrate.

FIG. **16** is a graph showing a composition gradient in a thickness direction of the mixed layer formed within the interlayer. In this particular embodiment, the interlayer consists of Si. A RF power was applied to a substrate holder so that the self-bias voltage produced in a substrate was set at −50 V in an early stage of film formation. Otherwise analogously to the manner as employed in the above embodiment, a hard carbon film was formed on the Si interlayer.

As shown in FIG. **16**, the carbon content reaches to zero at a depth of 50 Å from a surface of the mixed layer. The thickness of the mixed layer is about 50 Å. The mixed layer exhibits a maximum carbon content of about 70 atomic percent at a site A which is located at a depth of about 35% of a whole thickness of the mixed layer from the outer surface of the mixed layer. As also shown in FIG. **16**, the mixed layer has a mixed layer portion within which a carbon content in a thickness portion closer to the mixed layer surface is higher than in a thickness portion remoter from the mixed layer surface to define a carbon content gradient B. The mixed layer has another mixed layer portion extending from its outer surface to the site A within which a carbon content in a thickness portion closer to the outer surface of the mixed layer is slightly decreasing to define a carbon content gradient A. The improved adhesion of the hard carbon film to the mixed layer is assured by establishing such a carbon content gradient within the mixed layer that a carbon content in a thickness portion adjacent or closer to the outer surface of the mixed layer is higher than in a thickness portion opposite to or remoter from the outer surface of the mixed layer.

The thickness of the mixed layer can be controlled such as by varying the self-bias voltage produced in the substrate. For example, in case of the Si interlayer, if the self-bias voltage across the substrate is controlled at −1 KV in an early stage of film formation, the mixed layer can be formed to a thickness of about 130 Å.

A Si interlayer was formed on a vane to a thickness of 100 Å. A hard carbon film was subsequently formed on the Si interlayer. A self-bias voltage was varied during film formation in the manner as illustrated in FIG. **11**. The resulting hard carbon film had a thickness of 5000 Å and a Vickers

hardness of 3000 Hv. The hard carbon films formed were subjected to a scratch test for adherence evaluation. No sample thereof showed delamination.

Next, a hard carbon film was formed which contained an additive element. Such an hard carbon film containing the additive element was formed through an apparatus shown in FIG. **17**. Referring to FIG. **17**, in addition to having an opening **115** in the shield cover **114**, the apparatus has a second opening **117** spaced from the opening **115**. A target **118** is disposed to face toward the second opening **117**. An ion beam gun **119** is disposed in such a location that the target **118** can be irradiated with an ion beam from the ion beam gun **119**. The other constructions are analogous to respective ones of the apparatus of FIG. **4**.

The target materials included Si, Ta, Cr and B. The hard carbon films containing any of those additive elements were formed using the apparatus shown in FIG. **17**. The vane holder **112** was rotated during film formation, so that the carbon and additive element were deposited on each vane **113** through the opening **115** and the second opening **117**, respectively. As a result, the hard carbon film containing the additive element was formed on each vane **113**. The vane **113** had been precoated with an interlayer (100 Å thick) prior to film formation.

The target **118** was not employed when introducing N or F into a hard carbon film. Instead, a N_2 or CF_4 gas was introduced into a film formation atmosphere. More specifically, the CH_4 gas and a N_2 or CF_4 gas were supplied at respective partial pressures of 1.3×10^{-3} and 1.0×10^{-3} Torr.

The resulting hard carbon films were transferred to a surface characteristic tester for measurement of their friction coefficients and depths of wear. The friction coefficient was measured for Si, Ta and F while the depth of wear was measured for N, Cr and B. For comparative purposes, vanes carrying thereon neither the interlayer nor the hard carbon film, and vanes coated with the hard carbon film not containing the additive element were respectively prepared for measurement of their friction coefficients and depths of wear. For the depth of wear, a relative evaluation was made with respect to the hard carbon film not containing the additive element. The results are given in the following Table 2. For measurement, an aluminum ball indenter was employed which slidingly reciprocated two thousand times.

TABLE 2

Additive Element		Friction Coefficient	Wear Depth (Relative Value)
Type	Si	0.1	—
	Ta	0.13	—
	F	0.12	—
	N	—	0.6
	Cr	—	0.8
	B	—	0.7
	None	0.18	1
W/O Hard Carbon Film and Interlayer		0.5	4

As apparent from Table 2, the inclusion of additive elements in the resulting hard carbon films impart thereto improved friction coefficients and wear depths.

The content of the additive element may be made higher in a thickness portion of the hard carbon film closer to its outer surface than in a thickness portion thereof remoter from its outer surface. The provision of such a content gradient of the additive element improves the adherence of the resulting hard carbon film.

FIG. **18** is a partly cutaway schematic cross-sectional view showing another embodiment in accordance with the second aspect of the present invention. An interlayer **35** is formed on a roller **3**. A mixed layer **36** is formed within the interlayer **35** adjacent to an outer surface of the interlayer **35**. A hard carbon film **37** is formed on the interlayer **35**. The mixed layer **36** can be formed in the interlayer **35** analogously to the embodiment of FIG. **14**. The formation of the mixed layer **36** in the interlayer **35** enhances its adhesion to the hard carbon film **37**.

FIG. **19** is a partly cutaway schematic cross-sectional view showing still another embodiment in accordance with the second aspect of the present invention. An interlayer **55** is formed on an inner surface of a cylinder channel **5**. A mixed layer **56** is formed within the interlayer **55** adjacent to an outer surface of the interlayer **55**. A hard carbon film **57** is formed on the interlayer **35**. The mixed layer **56** can be formed in the interlayer **35** analogously to the embodiment of FIG. **14**. The formation of the mixed layer **56** in the interlayer **55** enhances its adhesion to the hard carbon film **57**.

In the above embodiments, the series of interlayer and hard carbon film was formed on an extensive surface area of the vane. However, they may be formed only on the surface area of a leading end of the vane.

Although the rotary compressor components were exemplarily used in the above embodiments to explain the members having a sliding contact surface in accordance with the present invention, the present invention is not limited to those rotary compressor components. The present invention is applicable to a cylinder or piston of a reciprocating compressor, further to an outer surface of an **0**-ring mounted to the piston, for example.

FIG. **20** is a perspective view of a scroll for use in a scroll compressor. The present invention is applicable to such a scroll **70**. A lapped portion **71** and a mirror plate **70** of the scroll **70** provide sliding contact surfaces respectively.

Also, the member having a sliding contact surface in accordance with the present invention is not limited to compressor components, and is applicable to a variety of members which includes a sliding contact surface. For example, the present invention may be applied to such a member as an inner or outer blade edge of an electric shaver. Furthermore, the present invention is applicable to a sliding portion of a thin layer magnetic head for use in hard disk drives, VTR cylinders, and outer surfaces of optical magnetic disks.

What is claimed is:

1. A member comprising:

a main body having a sliding contact surface;

a hard carbon film provided on said sliding contact surface of the main body, wherein said hard carbon film comprises a diamond thin film, a film having a mixed diamond and amorphous structure or an amorphous carbon thin film;

a mixed layer formed within a thickness region of said main body adjacent to said sliding contact surface thereof and containing carbon and a constituent element of said thickness region of the main body; and

said mixed layer having a carbon content gradient in its thickness direction so that a carbon content in a thickness portion thereof closer to an outer surface of the mixed layer is higher than in a thickness portion thereof remoter from the outer surface of the mixed layer, wherein said mixed layer is formed by introducing the carbon into said thickness region of the main body adjacent to the sliding contact surface thereof.

2. The member of claim **1**, wherein a thickness of said mixed layer is at least 5 Å.

3. The member of claim **1**, wherein said hard carbon film has a hydrogen content gradient in its thickness direction so that a hydrogen content in a thickness portion thereof remoter from an outer surface of the hard carbon film is higher than in a thickness portion thereof closer to the outer surface of the hard carbon film.

4. The member of claim **1**, wherein said mixed layer includes a concentrated portion having a maximum carbon content of at least 20 atomic percent.

5. The member of claim **4**, wherein said concentrated portion is present within a thickness region which covers 50% or less of a whole thickness of the mixed layer from the outer surface of mixed layer.

6. The member of claim **1**, wherein said hard carbon film contains at least one additive element selected from the group consisting of Si, N, Ta, Cr, F and B.

7. The member of claim **6**, wherein said hard carbon film has a content gradient of said additive element in its thickness direction so that an additive element content in a thickness portion thereof closer to the outer surface of the hard carbon film is higher than in a thickness portion thereof remoter from the outer surface of the hard carbon film.

8. A compressor incorporating the member of claim **1**.

9. A rotary compressor comprising:

a roller mounted eccentric to a rotatable crank shaft and having an outer periphery;

a hollow cylinder for accommodating said roller therein, said hollow cylinder having an inner surface in sliding contact with said outer periphery of the roller; and

a vane received in a channel provided on said inner surface of the cylinder and having a leading end in sliding contact with said outer periphery of the roller,

wherein said vane is said main body of the member of claim **1** and at least said leading end or a side portion of the vane constitutes said sliding contact surface.

10. A rotary compressor comprising:

a roller mounted eccentric to a rotatable crank shaft and having an outer periphery;

a hollow cylinder for accommodating said roller therein, said hollow cylinder having an inner surface in sliding contact with said outer periphery of the roller; and

a vane received in a channel provided on said inner surface of the cylinder and having a leading end in sliding contact with said outer periphery of the roller,

wherein said roller is said main body of the member of claim **1** and said outer periphery of the roller constitutes said sliding contact surface.

11. A rotary compressor comprising:

a roller mounted eccentric to a rotatable crank shaft and having an outer periphery;

a hollow cylinder for accommodating said roller therein, said hollow cylinder having an inner surface in sliding contact with said outer periphery of the roller; and

a vane received in a channel provided on said inner surface of the cylinder and having a leading end in sliding contact with said outer periphery of the roller,

wherein said hollow cylinder is said main body of the member of claim **1** and said inner surface of the hollow cylinder constitutes said sliding contact surface.

* * * * *

Exhibit D

US006354008B1

(12) **United States Patent**
Domoto et al.

(10) **Patent No.: US 6,354,008 B1**
(45) **Date of Patent: *Mar. 12, 2002**

(54) **SLIDING MEMBER, INNER AND OUTER BLADES OF AN ELECTRIC SHAVER AND FILM-FORMING METHOD**

(75) Inventors: **Yoichi Domoto**, Ikoma; **Hitoshi Hirano**, Nishinomiya; **Keiichi Kuramoto**, Kadoma, all of (JP)

(73) Assignee: **Sanyo Electric Co., Inc.**, Osaka (JP)

(*) Notice: This patent issued on a continued prosecution application filed under 37 CFR 1.53(d), and is subject to the twenty year patent term provisions of 35 U.S.C. 154(a)(2).

Subject to any disclaimer, the term of this patent is extended or adjusted under 35 U.S.C. 154(b) by 0 days.

(21) Appl. No.: **09/156,825**

(22) Filed: **Sep. 21, 1998**

(30) **Foreign Application Priority Data**

Sep. 22, 1997 (JP) 9-256986
Sep. 25, 1997 (JP) 9-259834
Aug. 25, 1998 (JP) 10-238173

(51) **Int. Cl.**[7] **B26B 19/04**
(52) **U.S. Cl.** **30/346.53**; 30/346.51
(58) **Field of Search** ..... 30/346.51, 346.54, 30/346.58, 350, 346.53; 76/115, 116, 104.1, DIG. 8

(56) **References Cited**

U.S. PATENT DOCUMENTS

3,064,349 A * 11/1962 Futterer et al. 30/346.51
3,161,955 A * 12/1964 Cronin 30/346.51
3,409,984 A * 11/1968 Futterer 30/346.51
3,611,572 A * 10/1971 Futterer 30/346.51
3,643,330 A * 2/1972 Brown 30/346.51
3,837,896 A * 9/1974 Lindstrom et al. 30/346.53
4,056,992 A * 11/1977 Blume 30/346.51
4,839,195 A * 6/1989 Kitamura et al.
5,488,774 A * 2/1996 Janowski 30/346.53
5,497,550 A * 3/1996 Trotta et al. 30/346.53
5,857,260 A * 1/1999 Yamada et al. 30/346.51
5,940,975 A * 8/1999 Decker et al. 30/346.54

FOREIGN PATENT DOCUMENTS

DE 3047888 * 7/1982 ..... 30/346.54
DE 3406521 * 8/1985 ..... 30/346.51
DE 3533238 * 3/1987 ..... 30/346.51
EP 0 828 015 A2 3/1998
JP 61-048392 A 3/1986
JP 2-68091 * 3/1990 ..... 30/350
JP 2-144087 * 6/1990 ..... 30/346.54
JP 5-253359 * 10/1993 ..... 30/350

* cited by examiner

Primary Examiner—Hwei-Siu Payer
(74) *Attorney, Agent, or Firm*—Arent Fox Kintner Plotkin & Kahn, PLLC

(57) **ABSTRACT**

A sliding member having a sliding surface for sliding contact with a cooperative member is disclosed. A protective film is deposited not only on the sliding surface but also a surface region immediately adjacent the sliding surface such that a ratio d**1**/d**2** is controlled to be 1 or greater, where d**1** is a thickness of the protective film on the sliding surface and d**2** is a thickness of the protective film on the surface region immediately adjacent the sliding surface. Alternatively, the protective film is deposited at least on the sliding surface such that the protective film is varied in thickness to define an irregular top surface.

5 Claims, 25 Drawing Sheets

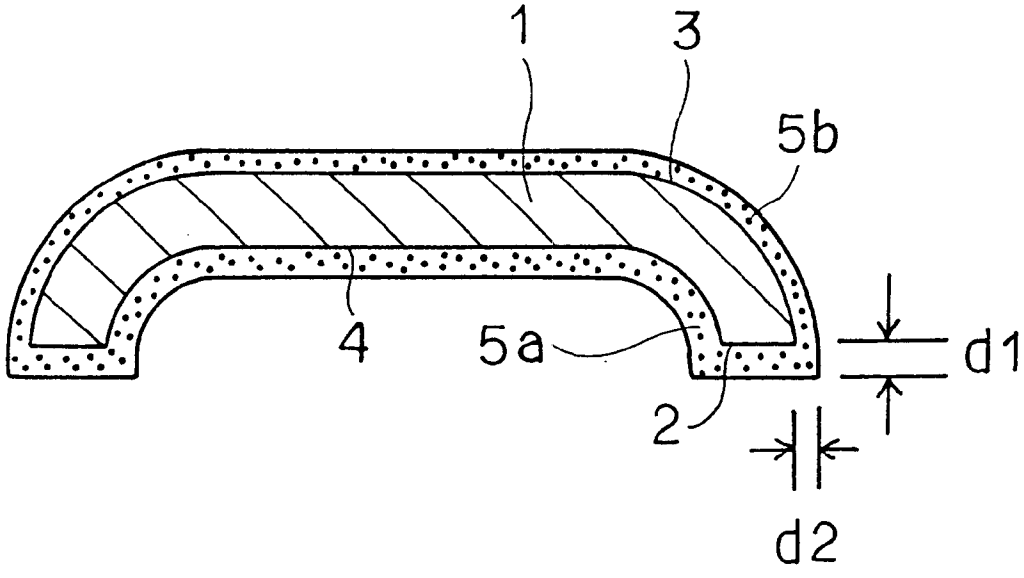

FIG. 1

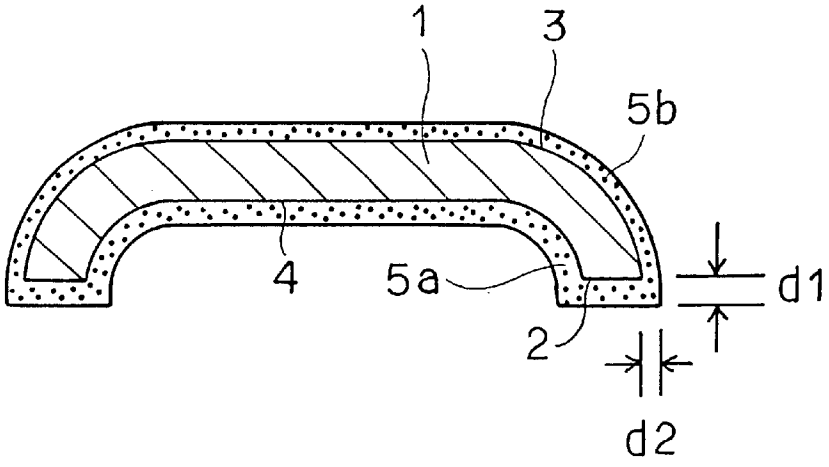

FIG. 2

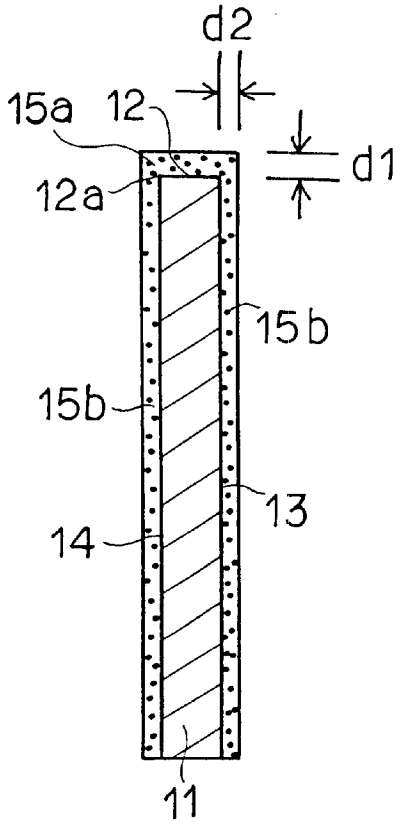

FIG. 3

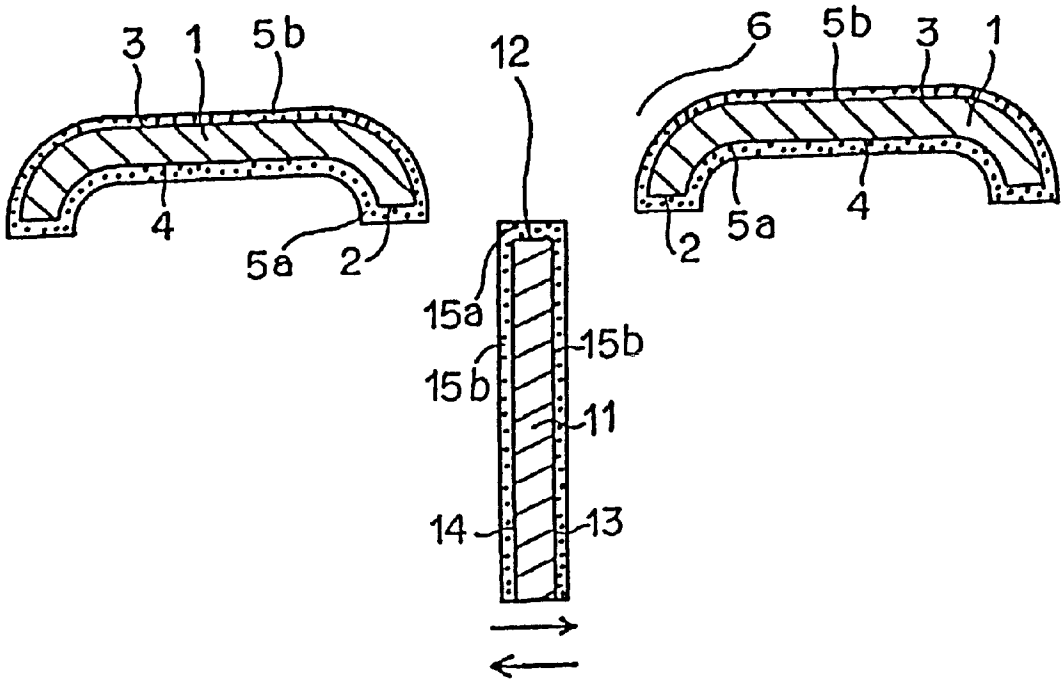

FIG. 4

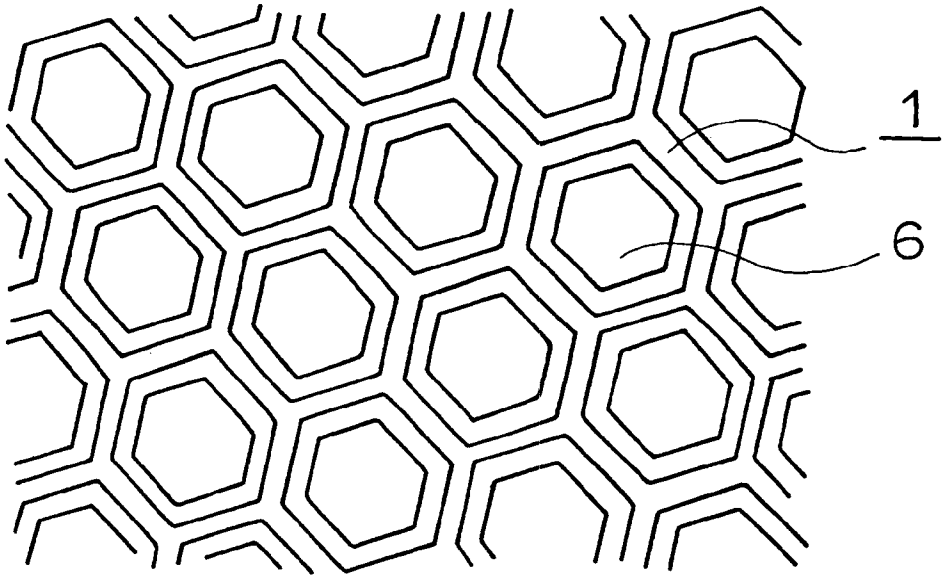

FIG. 5

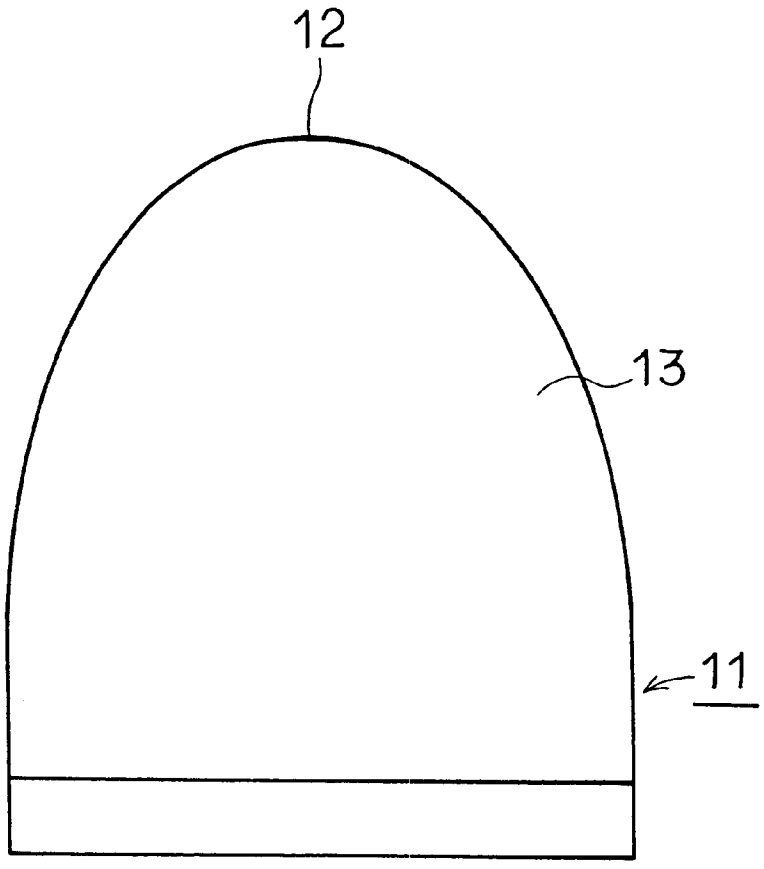

FIG. 6

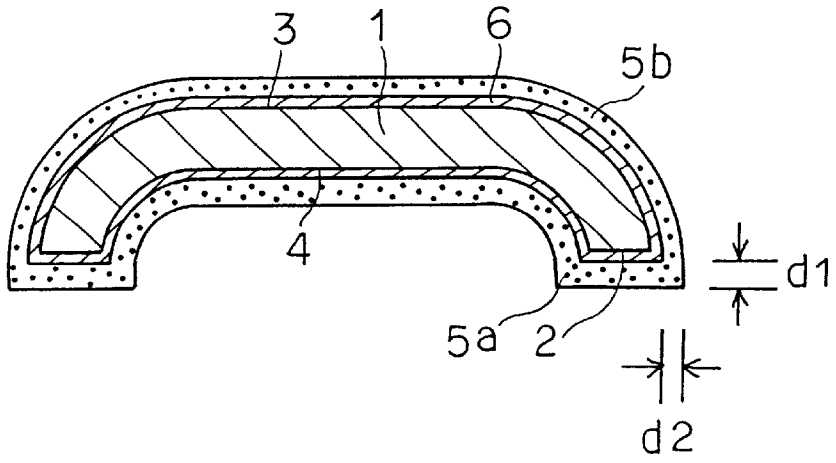

FIG. 7

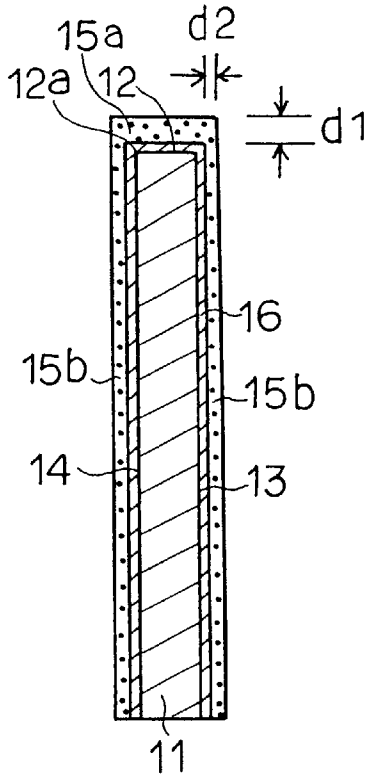

FIG. 8

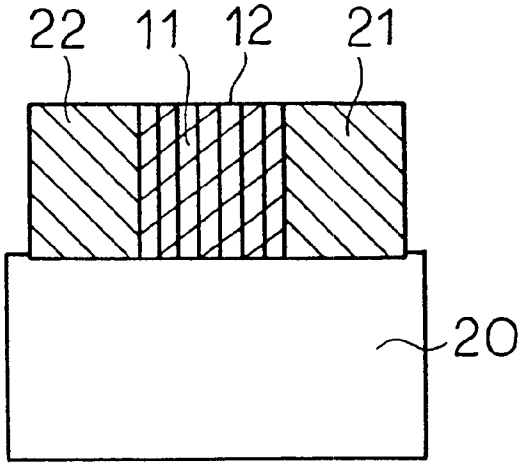

FIG. 9

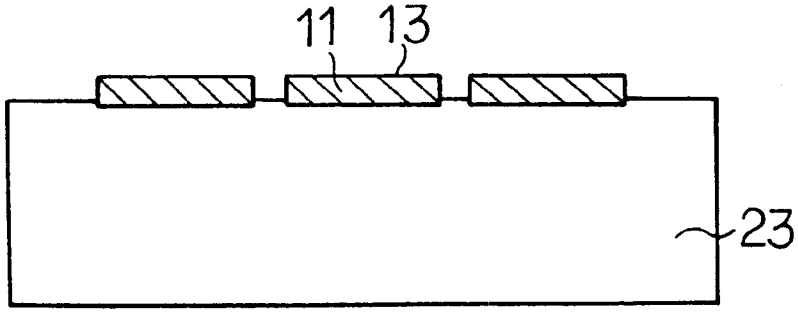

FIG. 10

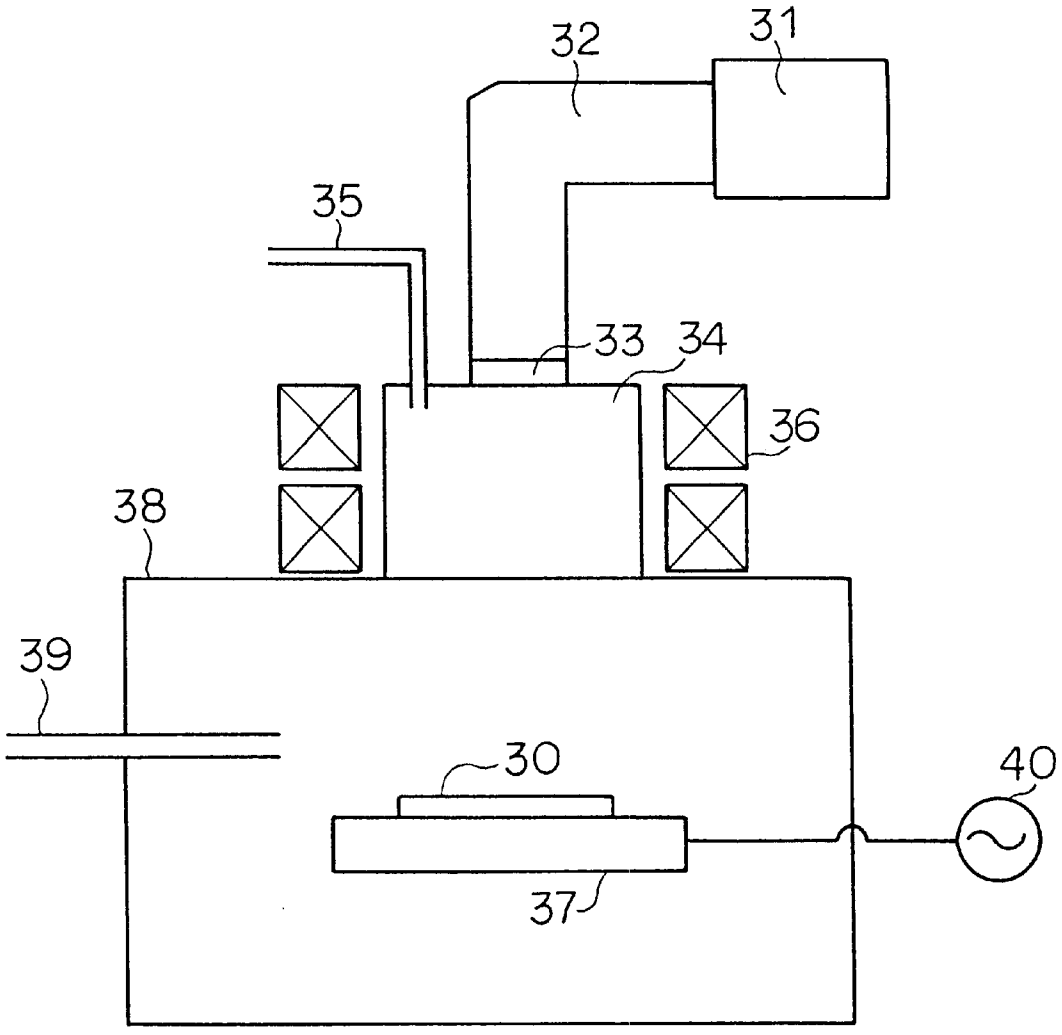

FIG. 11

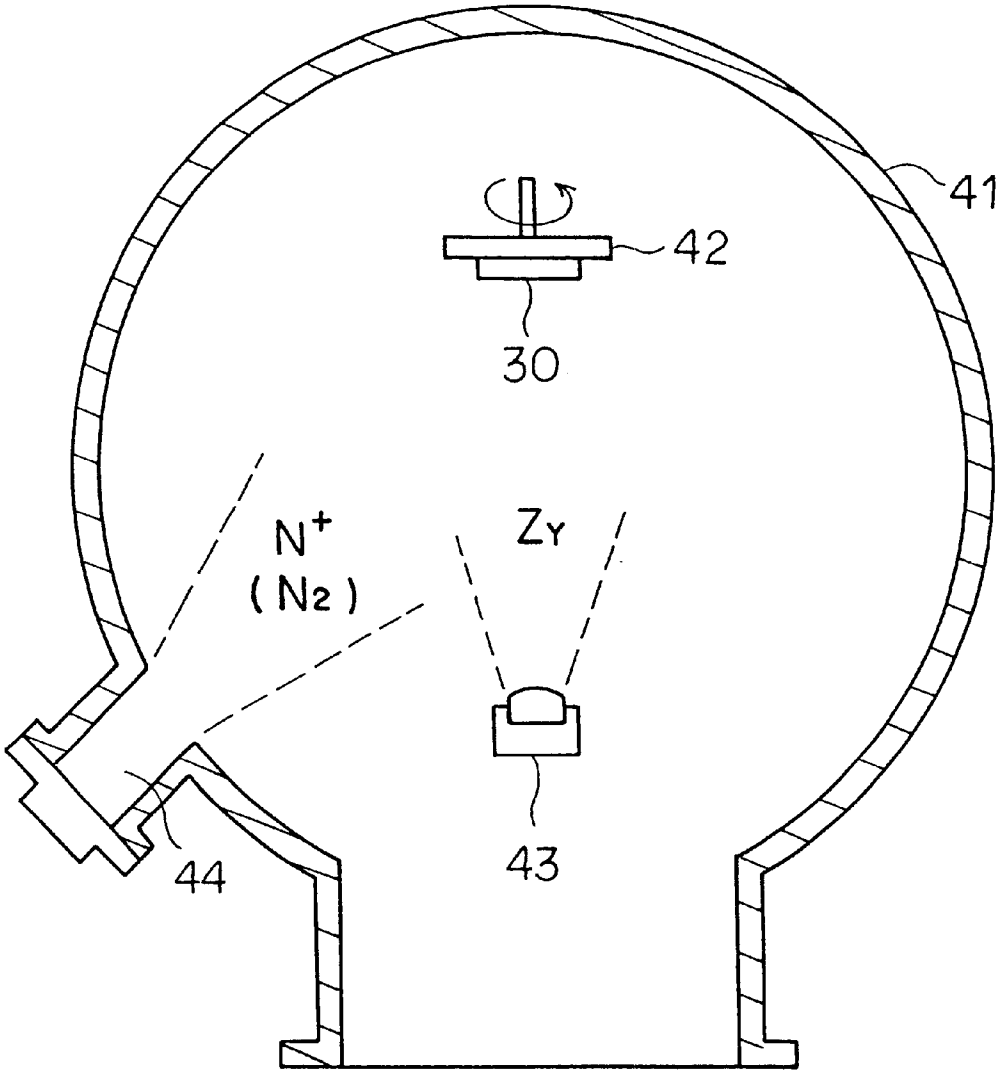

FIG. 12

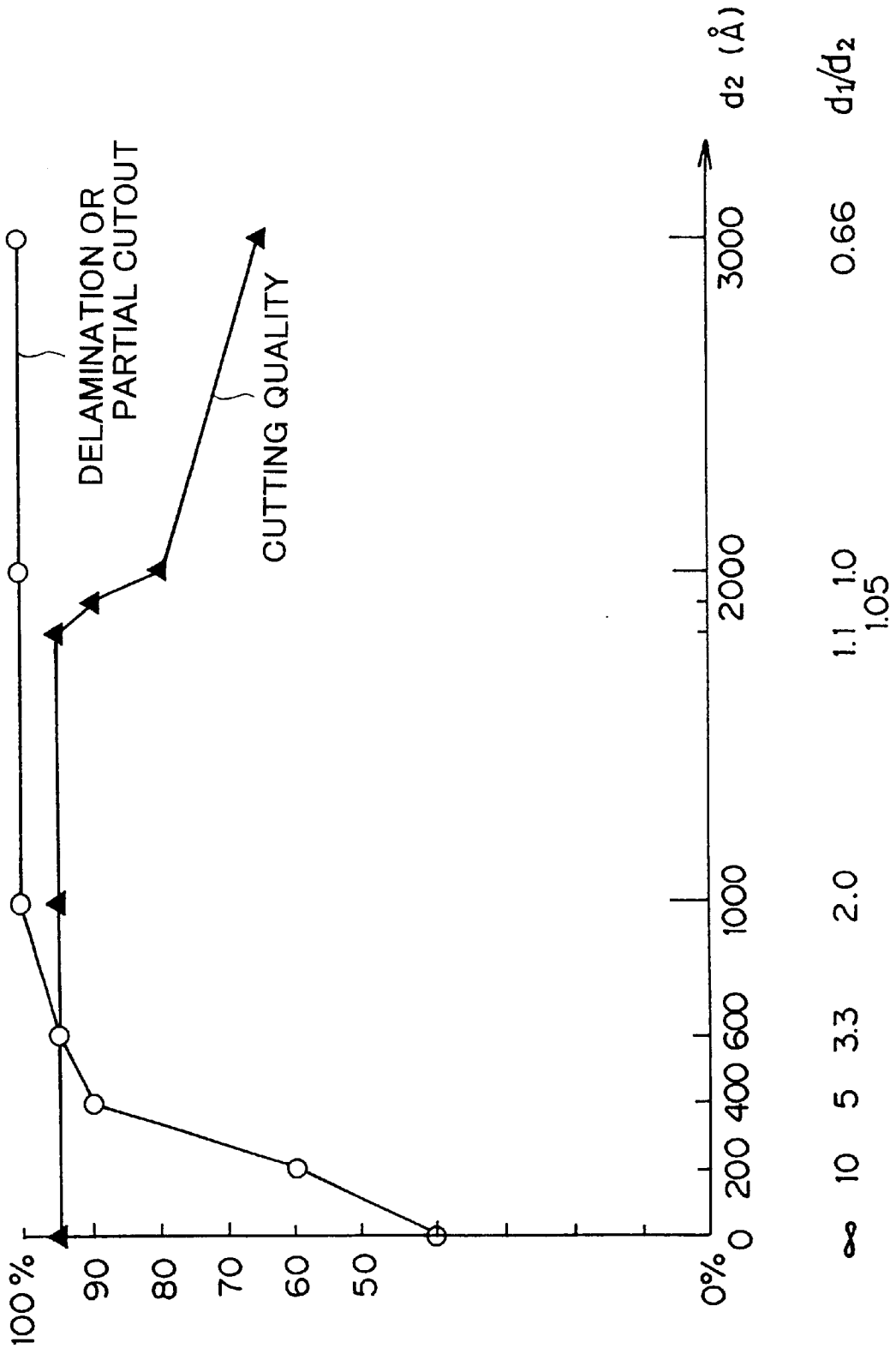
DELAMINATION OR PARTIAL CUTOUT
CUTTING QUALITY
100 %
90
80
70
60
50
0%
0
200
400
600
1000
2000
3000
d2 (Å)
∞
10
5
3.3
2.0
1.1
1.05
1.0
0.66
d1/d2

FIG. 13

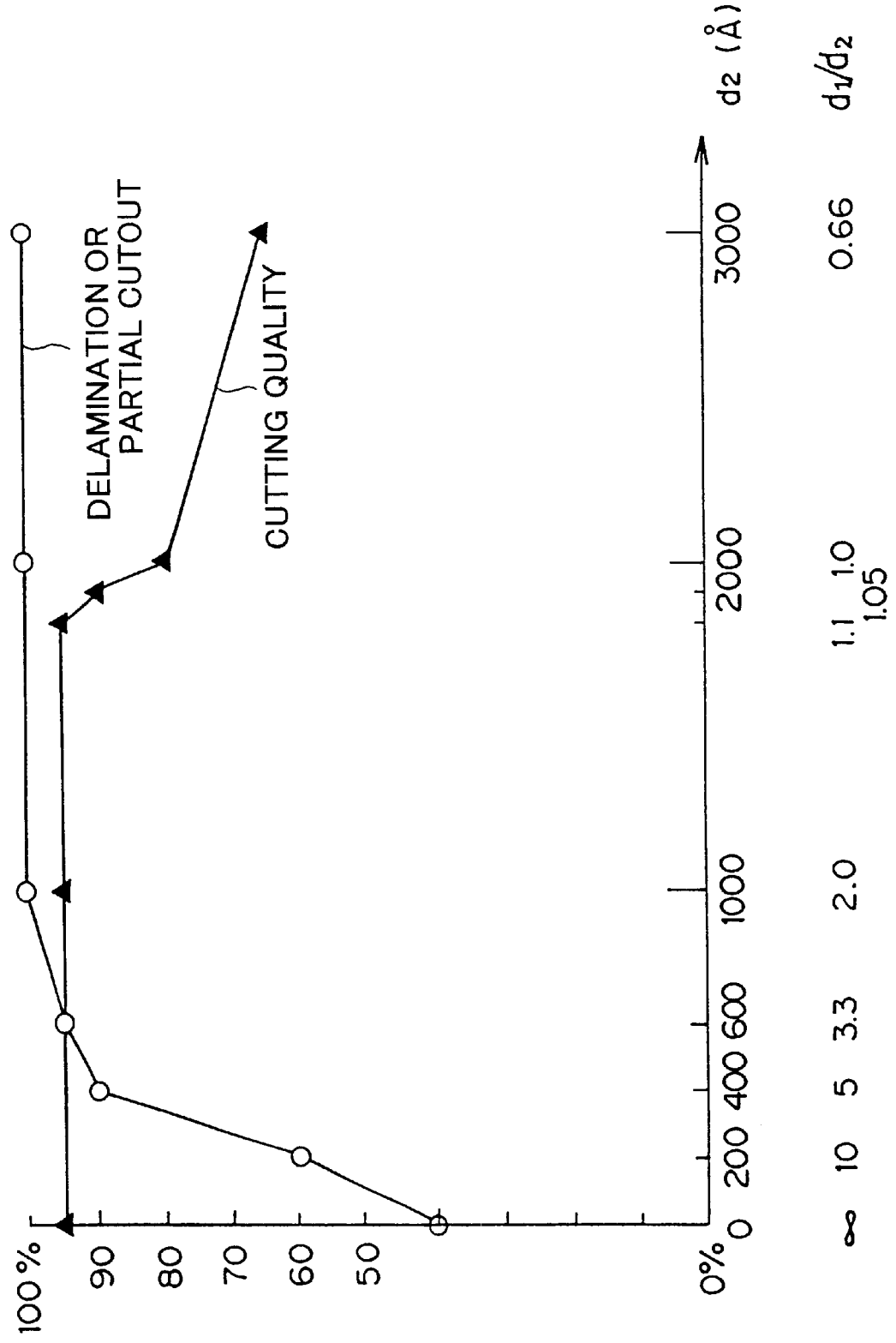
DELAMINATION OR PARTIAL CUTOUT
CUTTING QUALITY
100 %
90
80
70
60
50
0%
0
200
400
600
1000
2000
3000
d2 (Å)
∞
10
5
3.3
2.0
1.1
1.05
1.0
0.66
d1/d2

FIG. 14

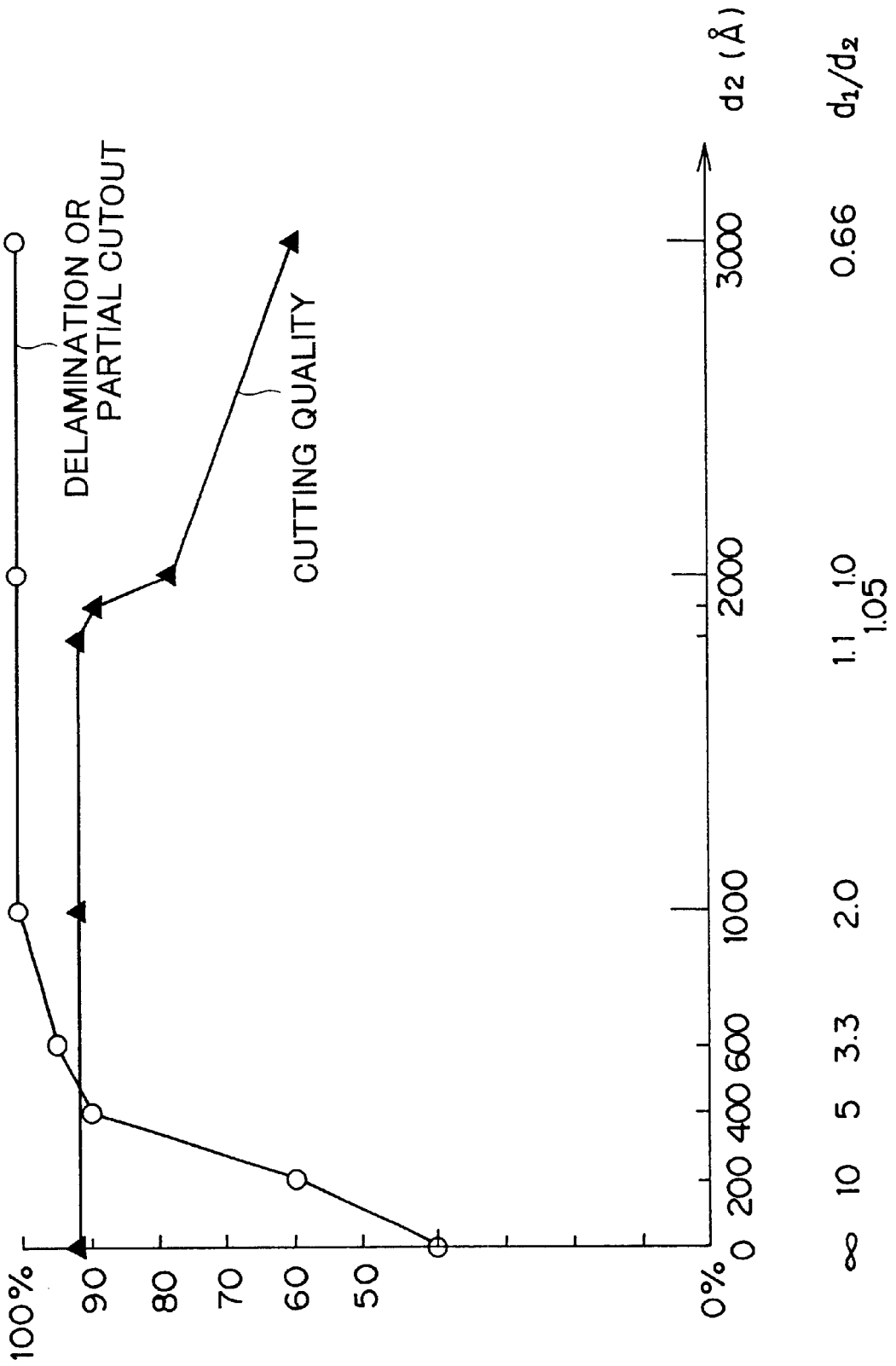
DELAMINATION OR PARTIAL CUTOUT
CUTTING QUALITY
100%
90
80
70
60
50
0%
0
200
400
600
1000
2000
3000
d2 (Å)
∞
10
5
3.3
2.0
1.1
1.05
1.0
0.66
d1/d2

FIG. 15

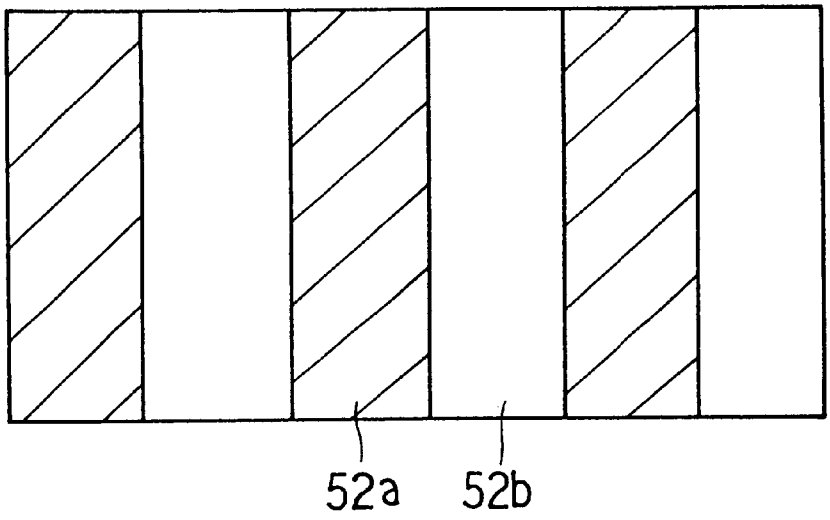

FIG. 16

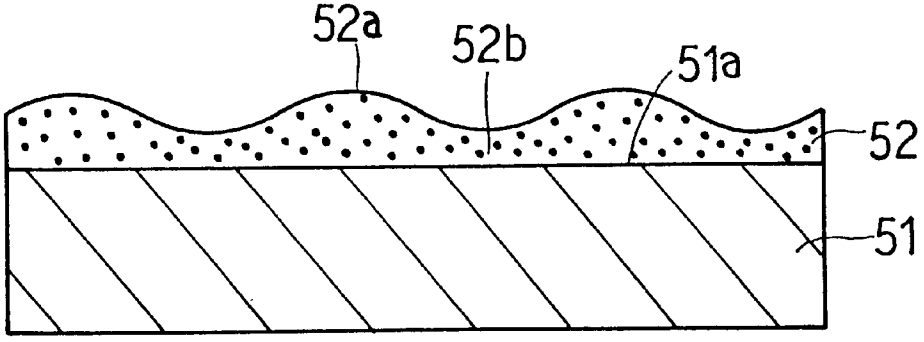

FIG. 17

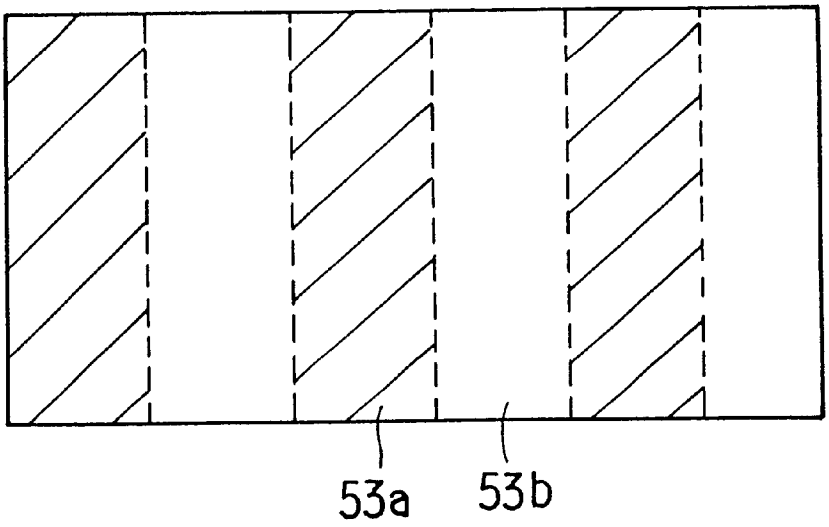

FIG. 18

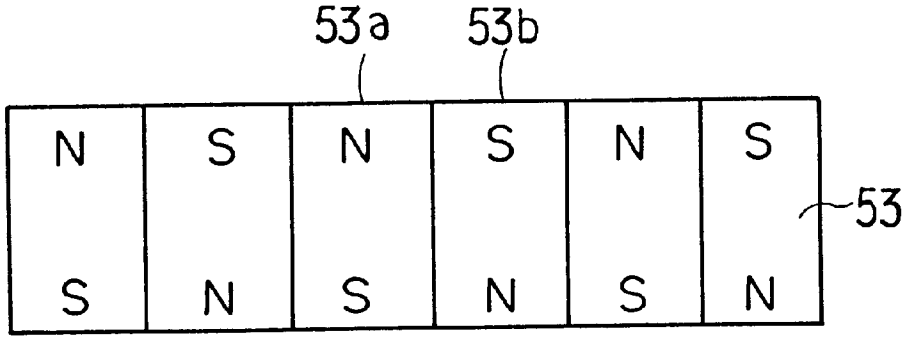

FIG. 19

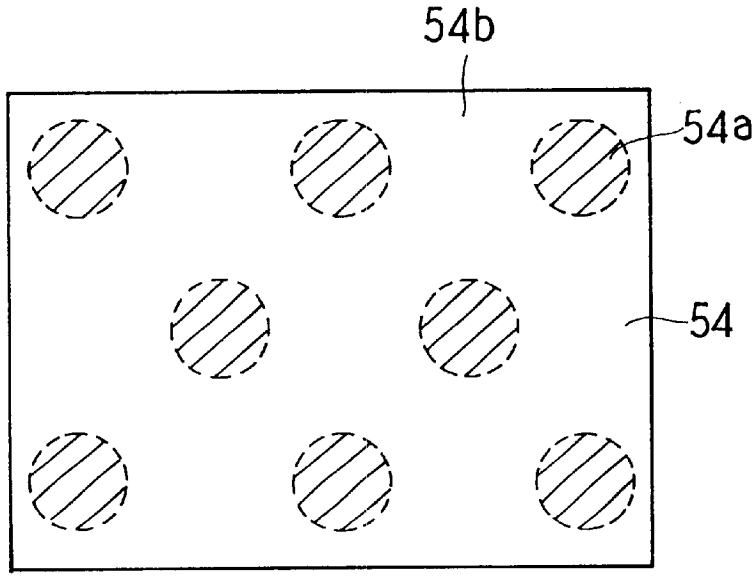

FIG. 20

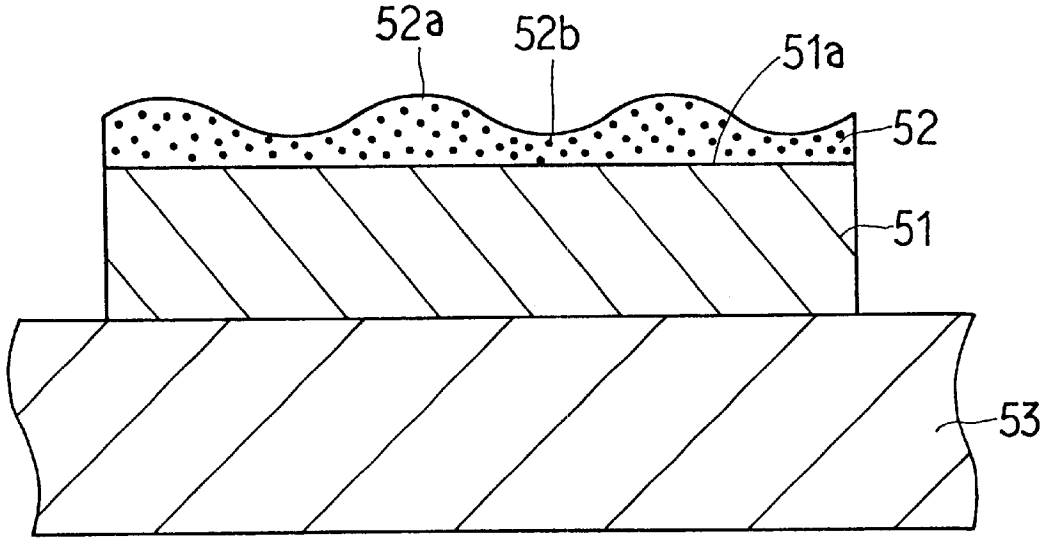

FIG. 21

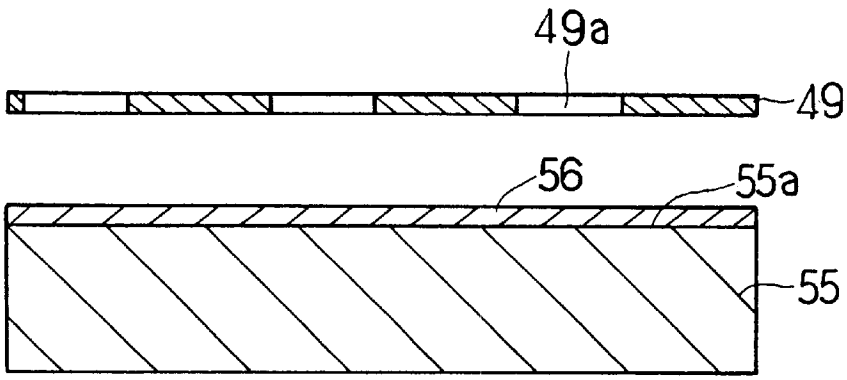

FIG. 22

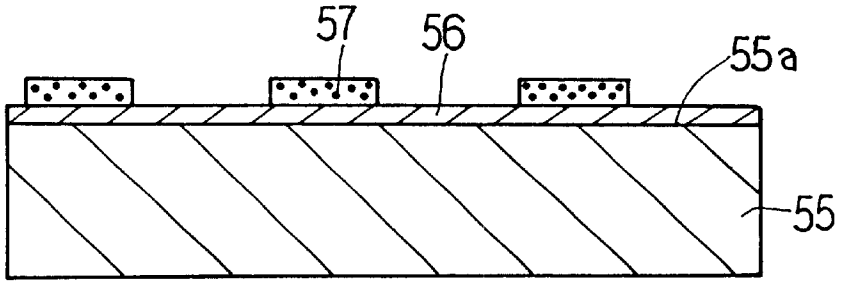

FIG. 23

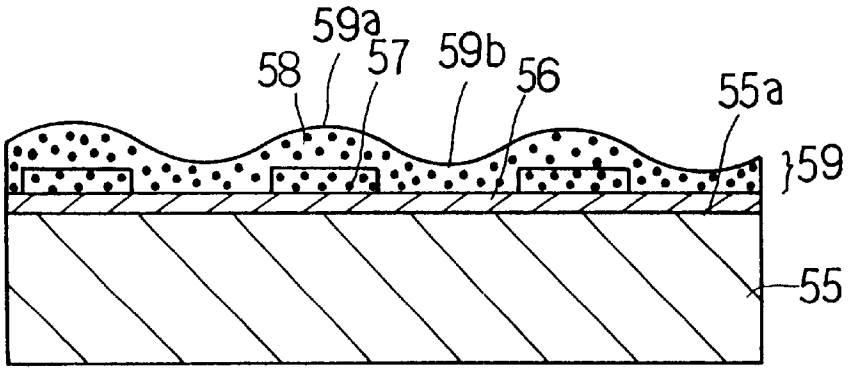

FIG. 24

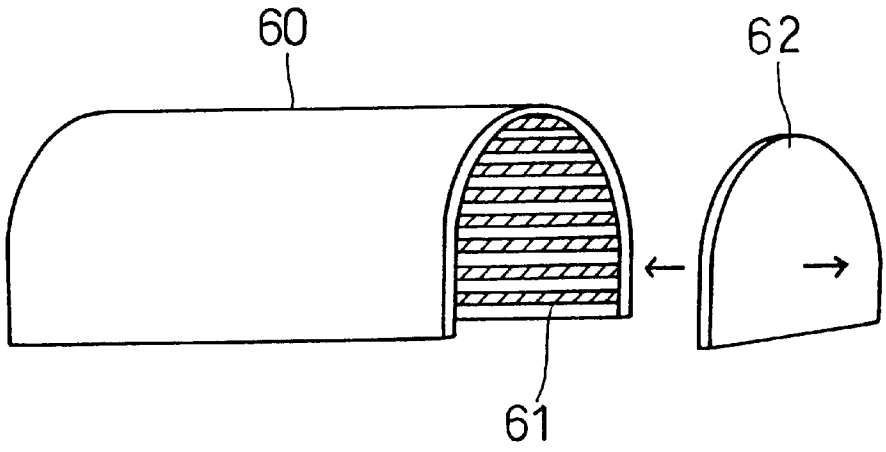

FIG. 25

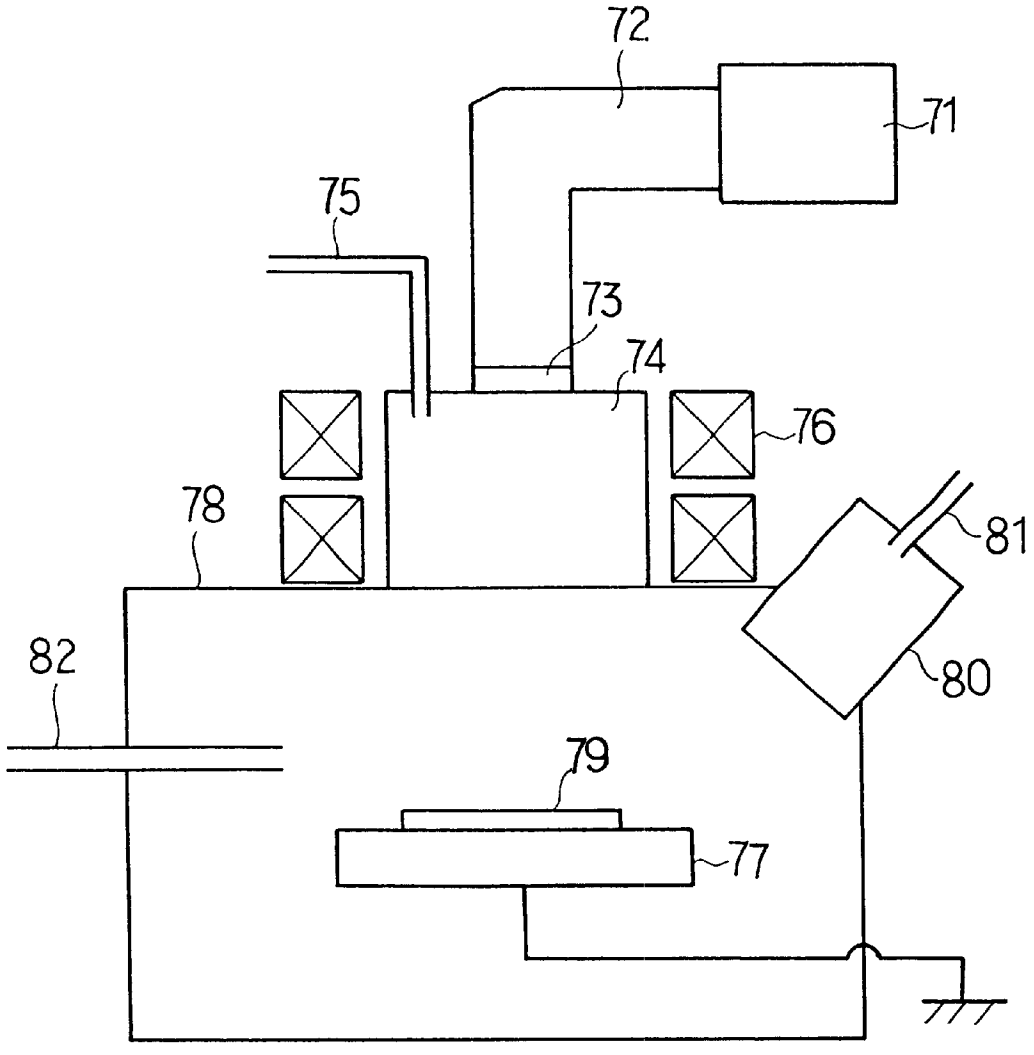

FIG. 26

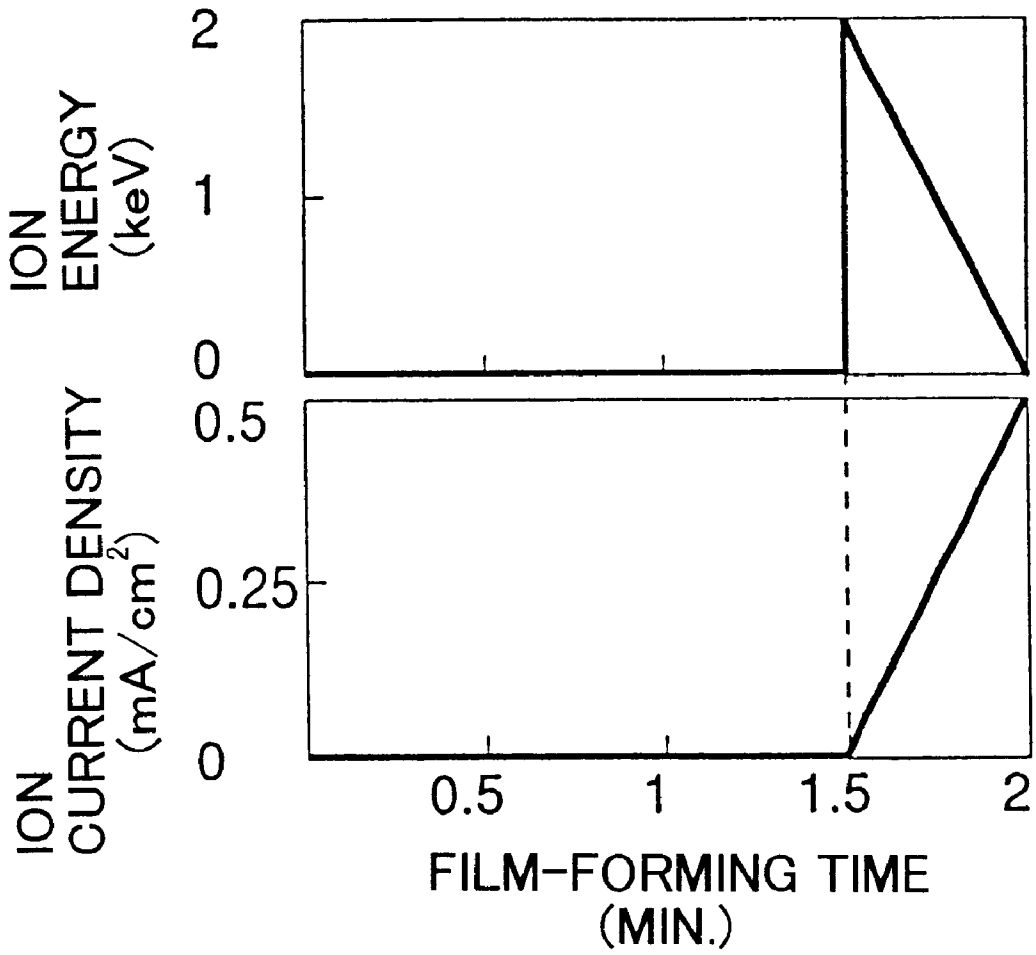
ION ENERGY (keV)
2
1
0
ION CURRENT DENSITY (mA/cm²)
0.5
0.25
0
0.5
1
1.5
2
FILM-FORMING TIME (MIN.)

FIG. 27

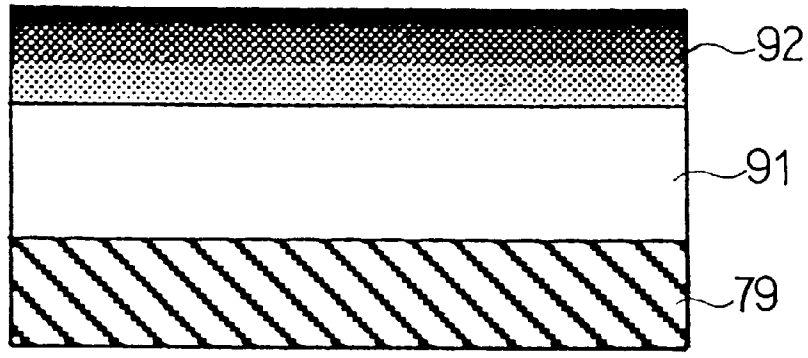

FIG. 28

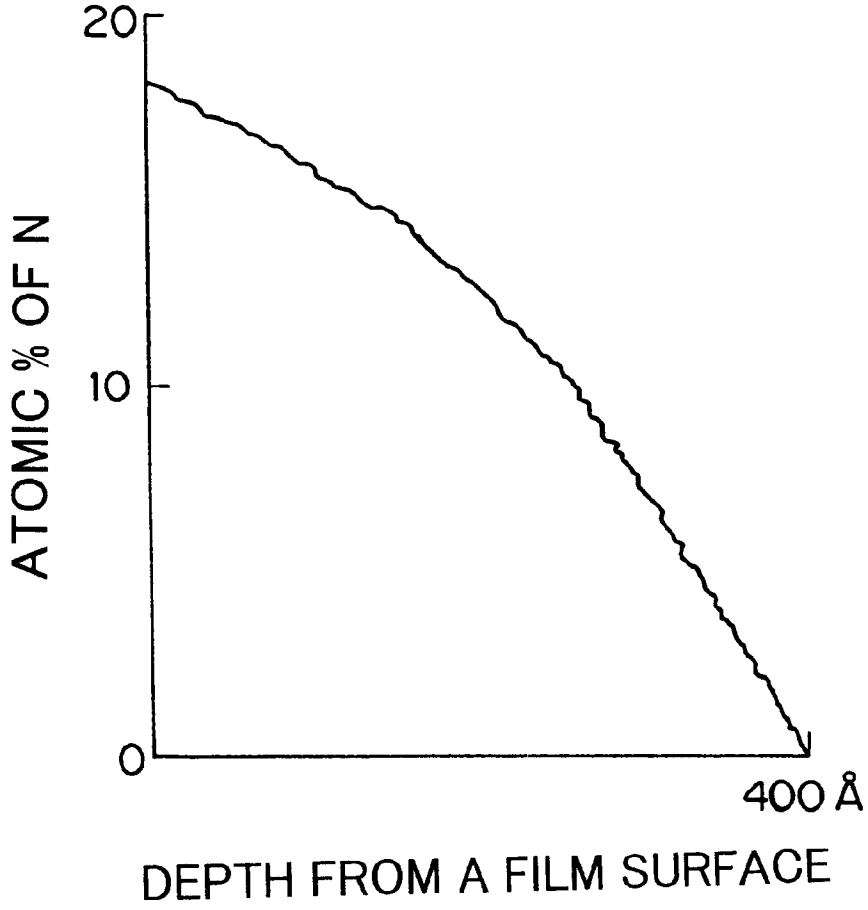

FIG. 29

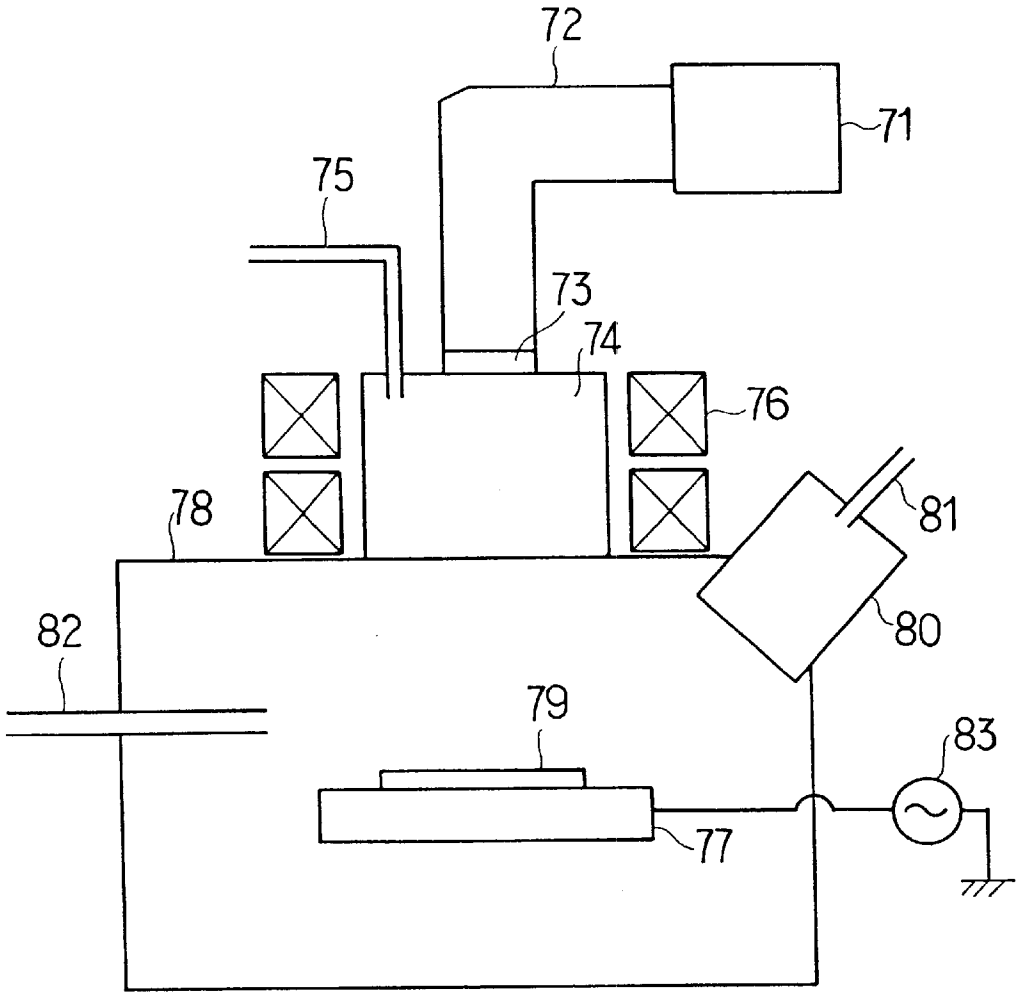

FIG. 30

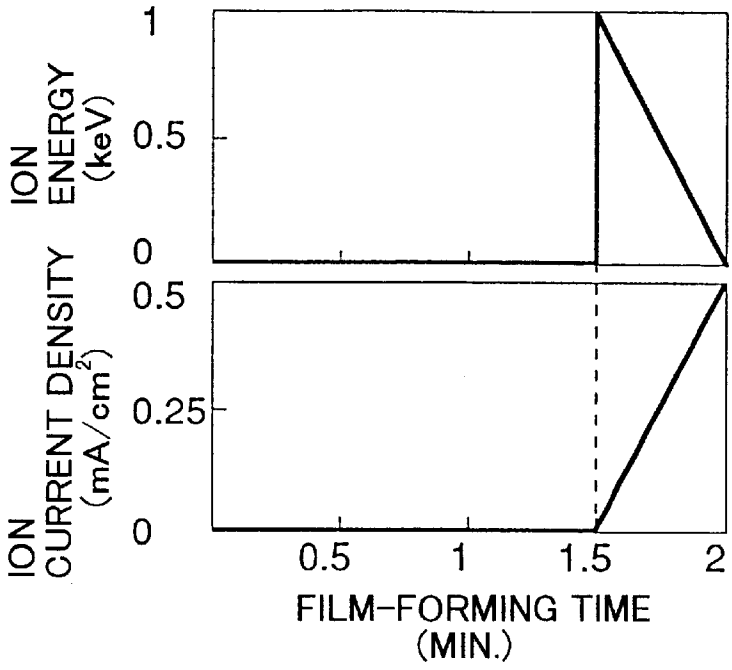
ION ENERGY (keV)
1
0.5
0
ION CURRENT DENSITY (mA/cm²)
0.5
0.25
0
0.5
1
1.5
2
FILM-FORMING TIME (MIN.)

FIG. 31

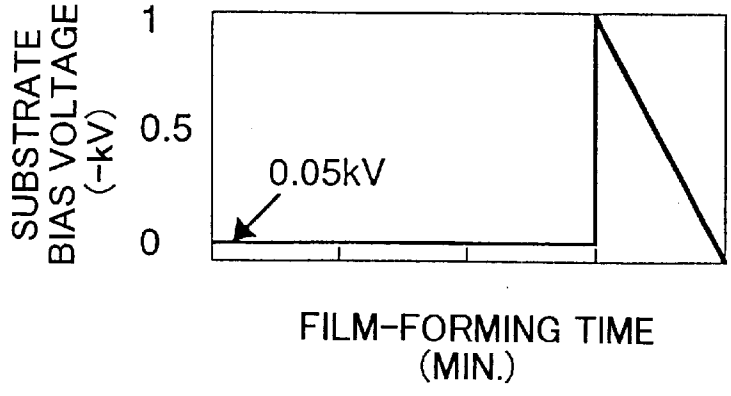
SUBSTRATE BIAS VOLTAGE (-kV)
1
0.5
0
0.05kV
FILM-FORMING TIME (MIN.)

FIG. 32

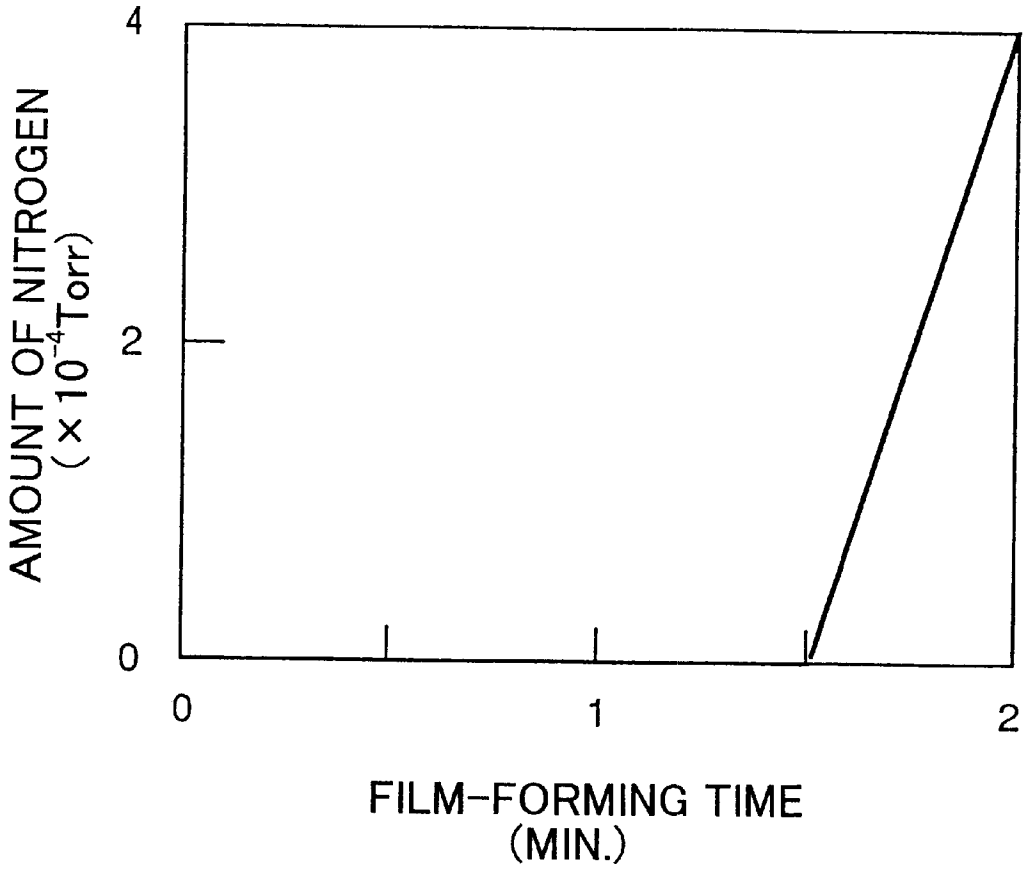

FIG. 33

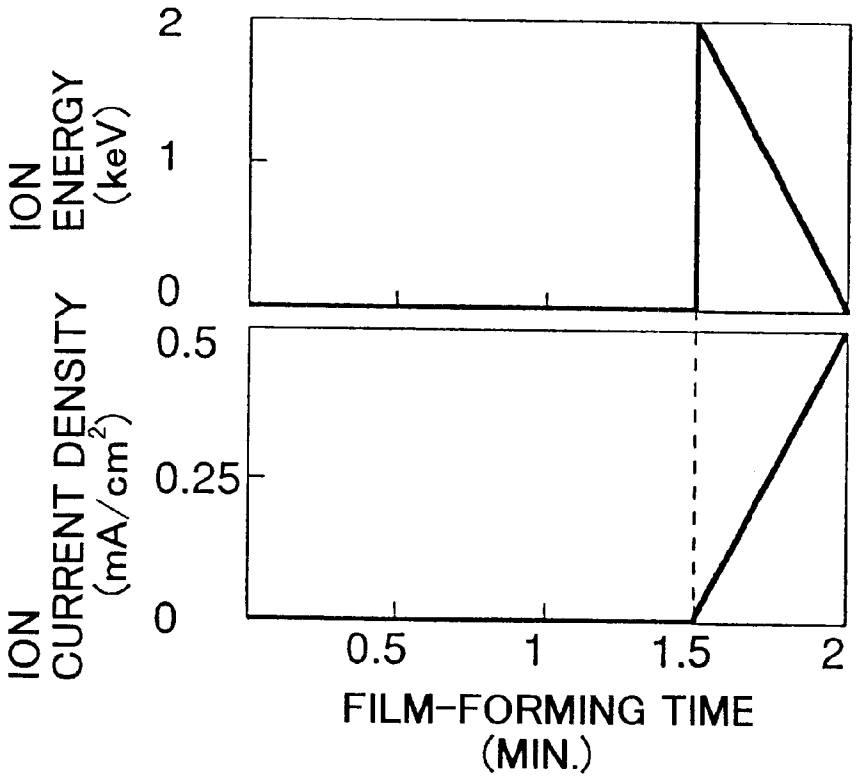
ION ENERGY (keV)
2
1
0
ION CURRENT DENSITY (mA/cm²)
0.5
0.25
0
0.5
1
1.5
2
FILM-FORMING TIME (MIN.)

FIG. 34

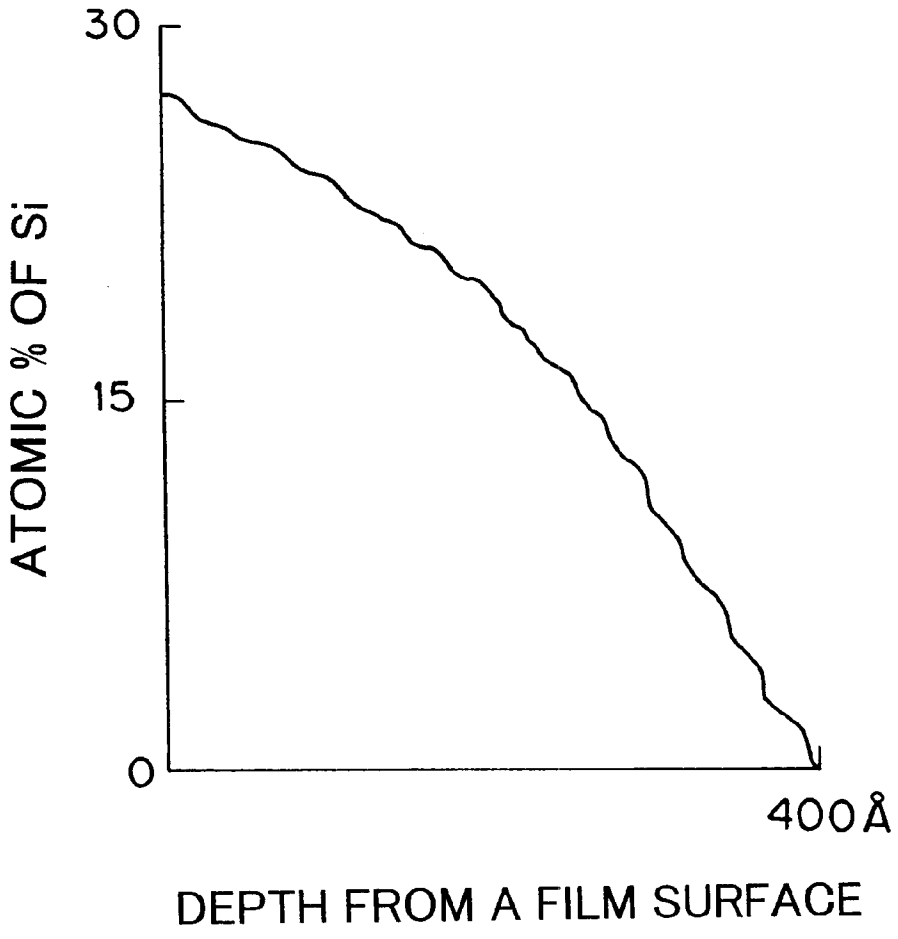

SLIDING MEMBER, INNER AND OUTER BLADES OF AN ELECTRIC SHAVER AND FILM-FORMING METHOD

BACKGROUND OF THE INVENTION

1. Field of the Invention

The present invention relates to sliding members having a sliding surface for sliding contact with a cooperative member, such as inner and outer blades of an electric shaver, compressor parts, VTR parts and thin film magnetic heads. The present invention further relates to a method of forming a film on a substrate by utilizing a CVD method.

2. Description of Related Art

Investigations have been made as to the formation of a protective film, such as a nitride or diamond-like carbon film, on a skin-contacting, outer surface of an outer blade of an electric shaver, which can impart improved wear-resistance thereto. However, the formation of protective film on an inner surface of the outer blade, which is brought into contact with an inner blade of the electric shaver, has not been put into general practice up to date. Likewise, the formation of protective film on an sliding surface of a distal edge of the inner blade of electric shaver, which is brought into contact with the outer blade, has not been put into general practice up to date.

The inventors of the present application have investigated to what extent wear-resistance can be improved by providing a protective film, such as a diamond-like carbon film, on a sliding surface of an inner or outer blade of an electric shaver, and found that such formation of protective film on the sliding surface results in delamination thereof from the sliding surface or in cutout thereof at the edges of sliding surface, which causes wear of the sliding surface.

Such occurrence of delamination or cutout of the protective film is not limited to the cases where it is applied to the inner or outer blade of an electric shaver, and can also be found in the cases where it is applied onto sliding surfaces, such as of sliding parts of compressor, sliding members of VTR and thin film magnetic heads.

For these sliding members, a protective film is sought which exhibits reduced amount of wear and excellent sliding characteristics.

A plasma CVD method, which deposits a film by decomposing a source gas in a plasma, has been widely used as a measure of forming a film at a relatively low temperature, and is capable of forming films having various compositions by suitably selecting the source gas. Such a CVD method can be utilized to form various films, such as diamond-like carbon films having high degrees of hardness, carbon nitride (CN) and carbon silicide (CSi) films respectively having low levels of friction coefficient.

For example, a diamond-like carbon film, when formed on a silicon substrate, shows a good adhesion to the silicon substrate. However, when attempted to form a carbon nitride or carbon silicide film on the silicon substrate by using conventional film-forming techniques, there arises a problem of poor adhesion therebetween.

SUMMARY OF THE INVENTION

A first object of the present invention is to prevent delamination or cutout of a protective film provided on a sliding surface of a sliding member.

A second object of the present invention is to provide a sliding member carrying on its sliding surface a protective film which exhibits a reduced level of wear and is excellent in sliding characteristics.

A third object of the present invention is to provide a method of forming a film which is as highly functional as a carbon nitride or carbon silicide film and which exhibits good adhesion to a substrate by utilizing a plasma CVD method.

A sliding member in accordance with a first aspect of the present invention is the sliding member having a sliding surface for sliding contact with a cooperative member. A protective film is deposited over the sliding surface and a surface region immediately adjacent the sliding surface in such a characteristic manner that a ratio d**1**/d**2** is controlled to be less than 1, wherein d**1** is a thickness of the protective film overlying the sliding surface and d**2** is a thickness of the protective film overlying the surface region immediately adjacent the sliding surface.

In a first preferred embodiment according to the first aspect of the present invention, the sliding member is an inner blade of an electric shaver. That is, the electric shaver inner blade of this embodiment has at its distal end a sliding surface for sliding contact with an outer blade of the electric shaver. A protective film is deposited not only on the sliding surface but also on side regions of the inner blade immediately adjacent the sliding surface, in such a characteristic manner that a ratio d**1**/d**2** is controlled to be not less than 1, wherein d**1** is a thickness of the protective film overlying the sliding surface and d**2** is a thickness of the protective film overlying the side regions.

In a second preferred embodiment according to the first aspect of the present invention, the sliding member is an outer blade of an electric shaver. That is, the electric shaver outer blade of this embodiment defines a sliding surface, which is brought into sliding contact with an electric shaver inner blade, on its inner surface region around a hole for catching the beard. The outer blade carries the protective film not only on its sliding surface but also on an outer surface region around the hole in such a characteristic manner that a ratio d**1**/d**2** is controlled to be not less than 1, wherein d**1** is a thickness of the protective film overlying the sliding surface and d**2** is a thickness of the protective film overlying the outer surface region.

In the first aspect of the present invention, the region immediately adjacent the sliding surface refers to the region which extends from an edge of the sliding surface at least a distance corresponding in dimension to the thickness of the protective film overlying the sliding surface.

In the first aspect of the present invention, the aforementioned thickness ratio d**1**/d**2** is not less than 1, as specified above, preferably in the range of 1.05~5.0, more preferably in the range of 1.1~3.3.

The deposition of the protective film not only on the sliding surface but also on the region immediately adjacent the sliding surface, in accordance with the first aspect of the present invention, effectively prevents the occurrence of delamination or cutout of the protective film. If the thickness d**2** of protective film, either deposited on the side regions immediately adjacent the sliding surface of the electric shaver inner blade, or deposited on the outer surface region of the electric shaver outer blade around the hole for catching the beard, is controlled to fall within the above-specified range, the delamination or cutout of the protective film on the sliding surface of either member can be prevented, while either member can maintain its function as a sliding member.

In the first aspect of the present invention, the thickness ratio d**1**/d**2** of the protective films is controlled to fall within the range as specified above. The thickness d**1** of protective

film on the sliding surface is suitably selected depending on the particular uses of sliding members, but is generally preferred to fall within the approximate range of 50 Å~10 μm.

In the first aspect of the present invention, the hardness of protective film is preferably not less than 1000 Hv, more preferably not less than 1500 Hv.

A sliding member in accordance with the second aspect of the present invention is the sliding member having a sliding surface for sliding contact with a cooperative member. The sliding member carries a protective film at least on its sliding surface. Characteristically, the protective film is varied in thickness to have projected and depressed portions which together define an irregular surface profile.

In the second aspect of the present invention, the projected and depressed portions of the protective film may be arranged in either regular or irregular pattern. For example, the projected and depressed portions of the protective film may be alternatingly arranged to provide a striped pattern on the surface of the protective film.

In the second aspect of the present invention, the difference in height between the neighboring projected and depressed portions is not particularly specified, but may be in the range of 100~1000 Å. In a particular case where the electric shaver outer blade is selected as the sliding member, a center distance between the neighboring projected and depressed portions of the protective film may be about 1~3 mm, for example.

In the second aspect of the present invention, the different color tones can be imparted to the projected and depressed portions of the protective film by using as the protective film a transparent film which, due to optical interference, assumes different color tones depending on its thickness. The wear of protective film generally progresses at its projected portions brought into direct contact with a cooperative member. As these projected portions wear to get thinner, their color tone is caused to change. Accordingly, the degree of wear of the protective film can be identified by visually observing the change in color tone of such projected portions. This helps us to find the time to replace the sliding member, for example.

The second aspect of the present invention may incorporate the first aspect of the present invention. That is, when the protective film is deposited not only on the sliding surface but also on the region immediately adjacent the sliding surface, the thickness ratio d**1**/d**2** may be controlled to be not less than 1 wherein d**1** is the thickness of the protective film on the sliding surface and d**2** is the thickness of the protective film on the region immediately adjacent the sliding surface. In this instance, the irregular surface profile may be imparted at least to the protective film on the sliding surface.

In the following description, the matters common to the first and second aspects of the present invention may be referred to as those of "the present invention".

Exemplary of the protective film are hard carbon films comprised of diamond and/or amorphous carbon having a diamond structure, and ceramic films.

Specific examples of the hard carbon films include a crystalline diamond film, an amorphous diamond-like carbon film and a diamond-like carbon film partly containing a crystalline structure. The hard carbon film of the present invention may contain the other elements, such as nitrogen and Si, in a mixed fashion.

Examples of the ceramics for use in the protective film of the present invention include oxides, nitrides and carbides of Zr, Ti, Cr, Hf, B, C, Ta, Al and Si.

Other than the aforementioned hard carbon films and ceramic films, metal films such as of Cr and Ni can also be used for the protective film. Such metal films can be formed by plating, for example.

The protective film of the present invention can be formed as by an ECR plasma CVD method and an ion beam deposition method. Other applicable methods include sputtering methods, the other types of PVD and CVD methods, and plating.

The protective film of the present invention may be deposited on an interlayer which has been deposited to cover the sliding surface and the surface region immediately adjacent the sliding surface of the sliding member. The thickness of the interlayer on the sliding surface is preferably made about comparable to that on the surface region immediately adjacent the sliding surface. However, they may be differentiated from each other. The thickness of the interlayer is preferably in the approximate range of 50 Å~8000 Å.

The sliding member of the present invention is illustrated as the electric shaver inner blade in the first embodiment and as the electric shaver outer blade in the second embodiment. However, the sliding member of the present invention can also be applied to the other sliding members, e.g., parts of a compressor such as a rotary compressor. Specifically, the present invention can be applied to rotary compressor parts including a roller, cylinder, vane, and a member having channels for receiving the cylinder. The present invention is also applicable to sliding parts of a VTR, and a thin film magnetic head for use in a hard disk drive (HDD). The present invention is further applicable to a sliding member such as a mask screen which is used to locate a solder at a target position when electronic parts are mounted on a printed circuit board.

The material type of the sliding member in the present invention is not particularly limited, and may be stainless steel, iron-based alloys, cast irons (Mo—Ni—Cr cast iron), steel (high-speed tool steel), aluminum alloys, carbons (aluminum-impregnated carbons), ceramics (oxides, nitrides, or carbides of Ti, Al, Zr, Si, W and Mo), Ni alloys, Ti alloys, or super hard alloys (WC, TiC, or BN), for example.

A method in accordance with a third aspect of the present invention is the method which deposits a film having a thickness varied in a manner to define an irregular surface by using a CVD technique. This method is characterized as comprising the steps of providing a distribution of lines of magnetic force above the substrate, and depositing the film on the substrate so that the film is varied in thickness in a pattern corresponding to the distribution of lines of magnetic force to define said irregular surface.

Although not intended to limit the scope of the present invention, the method in accordance with the third aspect of the present invention may be employed to form the protective film of the sliding member in accordance with the second aspect of the present invention.

In the third aspect of the present invention, the distribution of lines of magnetic force can be produced above the substrate by using various techniques. For example, it can be produced by placing a magnet beneath the substrate. In this instance, the substrate, if magnetic, can be fixed in position by the magnet.

A method in accordance with a fourth aspect of the present invention is also the method which deposits a film having a thickness varied in a manner to define an irregular surface by using a CVD technique. This method is charac-

terized as comprising the steps of depositing a first film on selected regions of a substrate, and depositing a second film over an entire surface of the substrate carrying the first film so that a film comprising the first and second films can be produced which is varied in thickness to have relatively thick portions corresponding in location to said selected regions for defining said irregular surface.

Although not intended to limit the scope of the present invention, the method in accordance with the fourth aspect of the present invention may be employed to form the protective film of the sliding member in accordance with the second aspect of the present invention.

In the fourth aspect of the present invention, the deposition of first film on the selected-regions of the substrate can be accomplished, for example, by using a mask which functions to confine the deposition of first film on the selected regions of the substrate.

Examples of the film deposited in accordance with the third and fourth aspects of the present invention include hard carbon films comprised of diamond and/or amorphous carbon having a diamond structure, and ceramic films.

A method in accordance with a fifth aspect of the present invention is the method which deposit a film on a substrate by a CVD technique utilizing a plasma. The method includes the steps of decomposing a source gas in a plasma to deposit a first film layer on the substrate, and directing ions or radicals onto the substrate, while decomposing the source gas in the plasma, to deposit a second film layer on the first film layer to thereby provide the film on the substrate.

In the fifth aspect of the present invention, the ions or radicals for use in the deposition of the second film layer may generally be of an element different in type from a principal constituent element of the source gas. If contemplated forming the first and second film layers respectively from a carbon film and a carbon nitride or carbon silicide film, for example, a gas comprised principally of carbon, such as a CH_4 gas, may generally be used as the source gas and the ions or radicals of silicon or nitrogen may be directed onto the substrate. However, the ions or radicals for use in the deposition of the second film layer may be of the same element as principally constituting the source gas.

In the fifth aspect of the present invention, the applicable source gases, other than the gas comprised principally of carbon, include the gases which, as a principal component, contains silicon, titanium, zirconium, boron, hafnium, or aluminum. The applicable ions or radicals for use in the deposition of the second film layer, other than the aforementioned ions or radicals of silicon and nitrogen, include those of carbon, oxygen and hydrogen.

In accordance with the fifth aspect of the present invention, the first film layer may be made from a film which is well-adherent to the substrate, and the second film layer may be made from a film, such as a carbon nitride or carbon silicide film, which is poorly-adherent to the substrate but has desired functions. Accordingly, the deposition of such a functional, second film layer on the substrate, through the first film layer, results in the formation of a functional film showing good adhesion to the substrate.

In the film-forming method in accordance with the fifth aspect of the present invention, during the formation of the second film layer, the irradiation energy and dose of ions or radicals may be varied with film-forming time. Such variations in irradiation energy and dose of ions or radicals are effective to cause the distribution of the ion or radical component introduced into the second film layer to be varied in a thickness direction of the second film layer.

By reducing the irradiation energy of ions or radicals with film-forming time and increasing the irradiation dose of ions or radicals with film-forming time, a concentration of the ion or radical component introduced into the second film layer can be increased toward its surface so that a concentration gradient of the component is produced in the thickness direction of the second film layer.

The introduction of such a concentration gradient of the component into the second film layer imparts the improved function to the surface of the second film layer. The second film layer, if made from a carbon nitride or carbon silicide film, exhibits the reduced coefficient of friction toward its surface. The provision of the concentration gradient also results in the formation of a film which exhibits the improved adhesion to a substrate and is imparted thereto the satisfactory functions.

A film-forming method in accordance with a sixth aspect of the present invention is the method of depositing a film on a substrate by a CVD technique utilizing a plasma, and includes the steps of decomposing a source gas in a plasma to thereby deposit a first film layer on a substrate; and applying a radio-frequency power to the substrate for producing a substrate bias voltage (self-bias voltage) and concurrently irradiating the substrate with ions or radicals, while the source gas is decomposed in the plasma, to thereby deposit a second film layer on the first film layer.

In the sixth aspect of the present invention, the ions or radicals for use in the deposition of the second film layer may generally be of an element different in type from a principal constituent element of the source gas. If contemplated forming the first and second film layers respectively from a carbon film and a carbon nitride or carbon silicide film, for example, a gas comprised principally of carbon, such as a CH_4 gas, may generally be used as the source gas and the ions or radicals of silicon or nitrogen may be directed onto the substrate. However, the ions or radicals for use in the deposition of the second film layer may be of the same element as principally constituting the source gas.

In the sixth aspect of the present invention, the applicable source gases, other than the gas comprised principally of carbon, include the gases which contains, as a principal component, silicon, titanium, zirconium, boron, hafnium, or aluminum. The applicable ions or radicals for use in the deposition of the second film layer, other than the aforementioned ions or radicals of silicon and nitrogen, include those of carbon, oxygen and hydrogen.

In accordance with the sixth aspect of the present invention, the first film layer may be made from a film which is well-adherent to the substrate, and the second film may be made from a film, such as a carbon nitride or carbon silicide film, which is poorly-adherent to the substrate but has desired functions. Accordingly, the deposition of such a functional, second film on the substrate, through the first film, results in the formation of a functional film showing good adhesion to the substrate.

Also in the film-forming method in accordance with the sixth aspect of the present invention, during the formation of the second film layer, the irradiation energy and dose of ions or radicals, as well as the substrate bias voltage, may be varied with film-forming time. Such variations in irradiation energy of ions or radicals and the others are effective to cause the distribution of the ion or radical component introduced into the second film layer to be varied in a thickness direction of the second film layer.

By reducing the irradiation energy of ions or radicals and the substrate bias voltage with film-forming time and

increasing the irradiation dose of ions or radicals with film-forming time, a concentration of the ion or radical component introduced into the second film layer can be increased toward its surface so that a concentration gradient of the component is produced in the thickness direction of the second film layer.

The introduction of such a concentration gradient of the component into the second film layer imparts the improved function to the surface of the second film layer. The second film layer, if made from a carbon nitride or carbon silicide film, exhibits the reduced coefficient of friction toward its surface. The provision of the concentration gradient also results in the formation of a film which exhibits the improved adhesion to a substrate and is imparted thereto the satisfactory functions.

In the sixth aspect of the present invention, the application of radio-frequency power to the substrate causes the production of negative bias voltage in the substrate, as stated above. Such a negative bias voltage, if produced, generally acts to attract positive ions to the substrate so that they are preferentially introduced into the second film layer. Accordingly, in the sixth aspect of the present invention, those positive ions, if directed onto the substrate during the deposition of second film layer, are preferentially incorporated into the second film layer.

Also in the sixth aspect of the present invention, the radio-frequency power may be applied to the substrate to produce the substrate bias voltage during the deposition of first film layer on the substrate.

A film-forming method in accordance with a seventh aspect of the present invention is the method of depositing a film on a substrate by a CVD technique utilizing a plasma, and includes the steps of decomposing a source gas in a plasma to thereby deposit a first film layer on a substrate, and decomposing the source gas, as well as a second source gas which contains an element different in type from a principal constituent element of the source gas, in the plasma to thereby deposit a second film layer on the first film layer.

In the seventh aspect of the present invention, the second film layer can be formed which contains the element different in type from the constituent component of the first film layer, by decomposing the source gas and the second source gas in the plasma. It accordingly becomes possible, for example, to form a carbon-based film as the first film layer and subsequently form a film containing an element other than carbon, such as a carbon nitride or carbon silicide film, as the second film layer. In this exemplary case, the second source gas contains nitrogen or silicon.

In the seventh aspect of the present invention, the source gas may be varied in amount with film-forming time. Such a variation in amount of the second source gas with film-forming time leads to the varied distribution in concentration of the element contained in the second source gas in a thickness direction of the second film layer. For example, the increase in amount of the second source gas results in the formation of the second film layer which has an increased concentration of the element contained in the second source gas toward its surface so that a concentration gradient thereof is produced in the thickness direction of the second film layer.

The films of the present invention can be formed by using the film-forming methods in accordance with the aforementioned fifth, sixth and seventh aspects of the present invention. That is, the film of the present invention includes the first film layer comprised of a hard carbon film, and the second film layer deposited on the first film layer and containing nitrogen or silicon as well as the constituent component of the first film layer.

In the aforementioned fifth, sixth and seventh aspects of the present invention, the film of the present invention can be obtained by forming a hard carbon film as the first film layer and subsequently forming a carbon film containing nitrogen or silicon as the second film layer.

In forming the film of the present invention, a carbon-containing gas, such as a methane gas, may be used. In the fifth and sixth aspects of the present invention, ions or radicals of nitrogen or silicon may be directed onto the substrate. In the seventh aspect of the present invention, a gas containing nitrogen or silicon may be used as the second source gas.

In the present invention, the hard carbon film for constituting the first film layer may be a crystalline diamond film, an amorphous diamond-like carbon film, or a diamond-like carbon film partly having a crystalline structure.

In the film of the present invention, the thicknesses of the first and second film layers are not particularly specified. Although not limiting, the thickness of the first film layer is generally in the range of 20 Å~3000 Å, and the thickness of the second film layer is generally in the range of 30 Å~4 μm (40,000 Å).

The nitrogen or silicon content of the second film layer is preferably in the approximate range of 5~40 atomic %.

The concentration of nitrogen or silicon in the second film layer may be graded in a thickness direction thereof. In the preferred embodiment, the second film layer has such a concentration gradient in its thickness direction that the concentration of nitrogen or silicon is increased toward a surface of the second film layer.

The films formed by using the film-forming methods in accordance with the fifth through seventh aspects of the present invention, as well as the films in accordance with the present invention, may further have an interlayer interposed between the first film layer and the substrate. Such an interlayer may be formed of Si, Ti, Zr, W, Mo, Ru or Ge, or an oxide, nitride or carbide of any of thereof, for example. The interlayer can be formed by using generally-employed film-forming techniques. A magnetron RF sputtering technique, for example, can be utilized to form the interlayer. Such a sputtering technique generally uses the aforementioned metal element as a target which is sputtered by ions in argon plasmas to deposit a film. The sputtering, if accompanied by the introduction of an oxygen or nitrogen gas into a chamber, can deposit an oxide or nitride of the metal element as the interlayer. The sputtering, if accompanied by the introduction of a carbon-containing gas, such as a CH_4 gas, into the chamber, can deposit a carbide of the metal element as the interlayer.

The thickness of the interlayer may be in the approximate range of 20 Å~3000 Å, for example.

BRIEF DESCRIPTION OF THE DRAWINGS

FIG. **1** is a sectional view of one embodiment of an electric shaver outer blade in accordance with the first aspect of the present invention;

FIG. **2** is a sectional view of one embodiment of an electric shaver inner blade in accordance with the first aspect of the present invention;

FIG. **3** is a sectional view showing a set of the electric shaver outer blade shown in FIG. **1** and the electric shaver inner blade shown in FIG. **2**.

FIG. **4** is a plan view showing the shape of a hole provided in the electric shaver outer blade shown in FIG. **1**;

FIG. **5** is a side view showing the side of the electric shaver inner blade;

FIG. **6** is a sectional view of another embodiment of an electric shaver outer blade in accordance with the first aspect of the present invention;

FIG. **7** is a sectional view of another embodiment of an electric shaver inner blade in accordance with the present invention;

FIG. **8** is a side view showing a number of outer blades placed in position for film deposition on their respective sliding surfaces;

FIG. **9** is a side view showing a number of inner blades placed in position for film deposition on their respective sides;

FIG. **10** is a schematic block diagram showing one example of an ECR plasma CVD apparatus;

FIG. **11** is a schematic block diagram showing an apparatus for vacuum evaporation and ion implantation, for use in the formation of a ZrN film;

FIG. **12** is a graph showing the level of occurrence of delamination or cutout of a protective film and the level of cutting quality in relation to d**1**/d**2** as varied in one embodiment in accordance with the first aspect of the present invention;

FIG. **13** is a graph showing the level of occurrence of delamination or cutout of a protective film and the level of cutting quality in relation to d**1**/d**2** as varied in another embodiment in accordance with the first aspect of the present invention;

FIG. **14** is a graph showing the level of occurrence of delamination or cutout of a protective film and the level of cutting quality in relation to d**1**/d**2** as varied in a still another embodiment in accordance with the first aspect of the present invention;

FIG. **15** is a plan view showing one embodiment of a protective film deposited on a sliding member in accordance with a second aspect of the present invention;

FIG. **16** is a sectional view showing the protective film of FIG. **15**;

FIG. **17** is a plan view showing one example of magnet for use in a third aspect of the present invention;

FIG. **18** is a sectional view showing the magnet of FIG. **17**;

FIG. **19** is a plan view showing another example of magnet for use in the third aspect of the present invention;

FIG. **20** is a sectional view showing one embodiment for practicing a film-forming method in accordance with the third aspect of the present invention;

FIGS. **21** through **23** are sectional views showing one embodiment for practicing a film-forming method in accordance with a fourth aspect of the present invention;

FIG. **24** is a perspective view showing inner and outer blades of an electric shaver for use in one embodiment in accordance with the second aspect of the present invention;

FIG. **25** is a schematic sectional view showing an exemplary ECR plasma CVD apparatus for use in an embodiment for practicing the method in accordance with a fifth aspect of the present invention;

FIG. **26** is a graph showing the variations of ion energy and ion current density with film-forming time, during the deposition of a second film layer, in an embodiment for practicing the method in accordance with the fifth aspect of the present invention;

FIG. **27** is a sectional view showing a film embodiment in accordance with the present invention;

FIG. **28** is a graph showing a distribution of nitrogen concentration in a thickness direction of a second film layer incorporated in the film embodiment in accordance with the present invention;

FIG. **29** is a schematic sectional view showing an exemplary ECR plasma CVD apparatus for use in an embodiment for practicing the method in accordance with a sixth aspect of the present invention;

FIG. **30** is a graph showing the variations of ion energy and ion current density with film-forming time, during the deposition of the second film layer, in the embodiment for practicing the method in accordance with the sixth aspect of the present invention;

FIG. **31** is a graph showing the variation of substrate bias voltage with film-forming time, during the deposition of the second film layer, in the embodiment for practicing the method in accordance with the sixth aspect of the present invention;

FIG. **32** is a graph showing the variation of nitrogen amount with film-forming time, during the deposition of a second film layer, in an embodiment for practicing the method in accordance with a seventh aspect of the present invention;

FIG. **33** is a graph showing the variations of ion energy and ion current density with film-forming time, during the deposition of the second film layer, in another embodiment for practicing the method in accordance with the fifth aspect of the present invention; and

FIG. **34** is a graph showing a distribution of Si concentration in a thickness direction of a second film layer incorporated in another film embodiment in accordance with the present invention.

DESCRIPTION OF THE PREFERRED EMBODIMENTS

FIGS. **1** through **3** are sectional views showing inner and outer blades of an electric shaver, each as a sliding member in accordance with the first aspect of the present invention. FIG. **1** shows the electric shaver outer blade and FIG. **2** shows the electric shaver inner blade. FIG. **3** is a sectional view showing the positional arrangement of the electric shaver outer blade relative to the electric shaver inner blade. As shown in FIG. **3**, the electric shaver inner blade **11** is disposed inwardly of the electric shaver outer blade **1**. The electric shaver inner blade **11**, when operated to move to and fro in the direction indicated by the arrows in FIG. **3**, cuts off the beard caught in a hole **6** of the electric shaver outer blade **1**. As also shown in FIG. **3**, an inner surface portion of the outer blade **1** that extends to surround the hole **6** defines a sliding surface **2** for sliding contact with the electric shaver inner blade **11**. A distal end of the electric shaver inner blade **11** also defines a sliding surface **12**. The beard caught in the hole **6** of the electric shaver outer blade **1** is cut off by a shear force produced between an edge of the sliding surface **2** of the electric shaver outer blade **1** and an edge of the sliding surface **12** of the electric shaver inner blade **11**.

FIG. **4** is a plan view showing the shape of the holes **6** provided in the electric shaver outer blade **1**. FIG. **5** is a side view showing the shape of one side of the electric shaver inner blade **11**. As shown in FIG. **4**, a number of holes **6** is provided in the electric shaver outer blade **1** for catching the beard. Also, the electric shaver outer blade **1** is formed from a soft material so that it can slidably receive the distal end, i.e., the sliding surface **12** of the electric shaver inner blade **11** shown in FIG. **5**.

FIG. **1** is an enlarged sectional view of the electric shaver outer blade **1**. As shown in FIG. **1**, a protective film **5***b* is

provided on an outer surface **3** of the electric shaver outer blade **1**. Another protective film **5***a* is provided on an inner surface **4**, including the sliding surface **2**, of the electric shaver outer blade **1**. As can be seen from FIG. **1**, a thickness of the protective film **5***b* provided on the outer surface **3** is denoted by d**2**. A thickness of the protective film **5***a* provided on the inner surface **4** is denoted by d**1**. In the first aspect of the present invention, the protective films **5***a* and **5***b* are respectively provided such that the ratio d**1**/d**2** is not less than 1, preferably in the range of 1.05~5.0, more preferably in the range of 1.1~3.3.

FIG. **2** is an enlarged sectional view of the electric shaver inner blade. As shown in FIG. **2**, a protective film **15***a* is provided on a distal end, i.e., a sliding surface **12** of the electric shaver inner blade **11**. The electric shaver inner blade **11** further carries protective films **15***b* on its sides **13** and **14**. In this particular embodiment, the protective film **15***b* is deposited on opposing parallel sides **13** and **14** of the inner blade, which respectively cross a sliding direction thereof. As can be seen from FIG. **2**, a thickness of the protective film **15***a* provided on the sliding surface **12** is denoted by d**1**, and a thickness of the protective film **15***b* provided on each of the sides **13** and **14** is denoted by d**2**. In the first aspect of the present invention, the protective films **15***a* and **15***b* are respectively provided such that the ratio d**1**/d**2** is not less than 1, preferably in the range of 1.05~5.0, more preferably in the range of 1.1~3.3.

In the first aspect of the present invention, the protective film **5***b* may be provided to overly at least a limited region of the outer surface immediately adjacent or neighboring the sliding surface **2**, although shown in FIG. **1** as being provided over an entire region of the outer surface **3**. Accordingly, it should be understood that the protective film **5***b* may be provided only on the limited region of the outer surface **3** immediately adjacent the hole **6** shown in FIG. **3**, for the electric shaver outer blade shown in FIG. **1**.

Also in the first aspect of the present invention, its is necessary that the protective film **5***a* be provided to cover at least the sliding surface **2**, although shown to cover an entire region of the inner surface **4** of the electric shaver outer blade **1** in the embodiment shown in FIGS. **1** and **3**.

Further in the first aspect of the present invention, it is necessary that the protective film **15***b* be provided on the electric shaver inner blade **1** to cover at least a limited region of each side **13**, **14** thereof that immediately neighbors the sliding surface **12**, although shown to cover an entire region of each side **13**, **14** in the embodiment shown in FIGS. **2** and **3**. Accordingly, the protective film **15***b* may be provided to cover each side region that extends inwardly from the edge **15***a* a distance not smaller in dimension than the thickness d**1** of the protective film **15***a*.

FIGS. **6** and **7** are sectional views respectively showing further embodiments of outer and inner blades of an electric shaver in accordance with the first aspect of the present invention. FIG. **6** shows the electric shaver outer blade and FIG. **7** shows the electric shaver inner blade. In this particular embodiment, the electric shaver outer blade **1** carries thereon an interlayer **6** on which protective films **5***a* and **5***b* are formed, as shown in FIG. **6**. Even in the case where the interlayer **6** is such provided, the thickness d**1** of the protective film **5***a* provided on the sliding surface **2**, as well as the thickness d**2** of the protective film **5***b* provided on the region of outer surface **3** immediately adjacent the sliding surface **2**, are adjusted to fall within the ranges specified in the first aspect of the present invention.

Likewise, the electric shaver inner blade **11** carries thereon an interlayer **16** on which protective films **15***a* and **15***b*, are provided, as shown in FIG. **7**. Again, for this electric shaver inner blade, the thickness d**1** of the protective film **15***a* provided on the sliding surface **12**, as well as the thickness d**2** of the protective film **15***b* provided on the region of each side **13** and **14** immediately neighboring the sliding surface **12**, are adjusted to fall within the ranges specified in the first aspect of the present invention.

FIGS. **15** and **16** are views showing a protective film provided on a sliding surface of a sliding member in accordance with the second aspect of the present invention. FIGS. **15** and **16** are a plan view and a sectional view, respectively. As shown in FIG. **16**, a protective film **52** is deposited on a sliding surface **51***a* of a sliding member **51**. The protective film **52** includes relatively thick, projected portions **52***a* and relatively thin, depressed portions **52***b*, arranged in alternating and continuous fashions. As shown in FIG. **15**, the projected portions **52***a* (indicated by crosshatching) and depressed portions **52***b* are such arranged to define a striped pattern.

The projected portions **52***a* of the protective film **52** shown in FIG. **16** are those portions that will be brought into sliding contact with a cooperative member. Such construction serves to reduce a contact area of the protective film with the cooperative member and is thus effective in reducing a frictional resistance and accordingly improving its wear resistance. Also, the progress of wear can be detected from change in color tone of the protective film **52**, if it is formed from a transparent film which, due to optical interference, assumes different color tones depending on its thickness. That is, a degree of wear of the protective film **52** can be identified by visually observing the change of color tone at the projected portions **52***a* which, when contacted with a cooperative member, wears and reduces its thickness. For example, if the projected portions **52***a* present a color tone different from that of the depressed portions **52***b*, a striped pattern shown in FIG. **15** appears. As the wear progresses at the projected portions **52***a* to such an extent that they approximate in thickness to the depressed regions **52***b*, their respective color tones come closer to each other so that the striped pattern comes to disappear. Thus, the wear degree of the protective film **52** can be identified by visually observing such disappearance of the striped pattern. This suggests a timing for replacement of a sliding member, for example. Exemplary of the transparent film which, due to optical interference, assumes different color tones depending on its thickness is a diamond-like carbon film. As the diamond-like carbon film is gradually reduced in thickness, its color tone changes periodically in the sequence of "yellow", "red", "violet", "blue", "blue-green", "green" and "yellow".

The second aspect of the present invention may incorporate the aforementioned, first aspect of the present invention. In determining the thickness d**1** of protective film on the sliding surface and of the thickness d**2** of protective film on the region neighboring the sliding surface, the irregularities of the protective film are then averaged to obtain an average film thickness.

The protective film shown in FIGS. **15** and **16** as having a varying thickness can be formed, for example, by using the film-forming methods in accordance with the third and fourth aspects of the present invention.

FIGS. **17** and **18** are views showing one example of a magnet which is employed in the film-forming method according to the third aspect of the present invention for providing a distribution of lines of magnetic force above a substrate. FIGS. **17** and **18** are a plan view and a sectional

view, respectively. As shown in FIG. **18**, a magnet **53** is magnetized to produce discrete regions wherein N- and S-poles of the discrete region are reversed in position in the neighboring discrete region. Accordingly, a set of the N-pole **53***a* and S-pole **53***b* is arranged in a repeated fashion on either side of the magnet to define a striped pattern, as shown in FIG. **17**. The use of such a magnet **53** results in the formation of the protective film which includes relatively thick portions corresponding in location to the N-poles or S-poles and relatively thin portions corresponding in location to boundaries of the neighboring N- and S- poles. A plastic magnet may be employed as the aforementioned magnet **53**, for example. Alternatively, a plurality of magnets or electromagnets may suitably be arranged to constitute the magnet **53**.

FIG. **19** is a plan view showing another example of the magnet. In this magnet **54**, N-poles **54***a* (or S-poles) are dispersed like islands within an S-pole **54***b* (or N-pole). The use of such a magnet enables formation of the protective film in which either the relative thick, projected portions or relatively thin, depressed portions are dispersed like islands.

The suitable positional arrangement of the N- and S-poles, in the manner as stated above, to make a desired design, pattern or character results in formation of the protective film having projected or depressed portions arranged in accordance with the desired design or the other.

FIG. **20** is a sectional view showing one embodiment for practicing a film-forming method in accordance with the third aspect of the present invention. As shown in FIG. **20**, the magnet **51** is placed beneath a substrate, i.e., beneath the sliding member **51** to provide a desired distribution of lines of magnetic force above the substrate **51**. When the protective film **52** is subsequently deposited on the substrate **51**, irregularities are given thereto in a pattern corresponding to the distribution of lines of magnetic force. The protective film **52** can be formed which includes projected portions **52***a* and depressed portions **52***b* arranged in a striped pattern as shown in FIGS. **15** and **16**, by utilizing the magnet having a surface on which N-poles and S-poles are distributed in a striped pattern, as shown in FIGS. **17** and **18**. Specifically, the projected portions **52***a* can be formed corresponding in location to the N-poles or S-poles, while the depressed portions **52***b* can be formed corresponding in location to boundaries of the neighboring N- and S-poles.

FIGS. **21** through **23** are sectional views showing one embodiment for practicing the film-forming method in accordance with the fourth aspect of the present invention.

Referring to FIG. **21**, an interlayer **56** is deposited on a sliding surface **55***a* of a sliding member or substrate **55**. Such an interlayer **56** can be formed of at least one type of material selected from Si, Zr, Ti, Ru, Ge and oxides, carbides and nitrides thereof. The interlayer can be interposed between the protective film and the sliding surface of sliding member, in the first and second aspects of the present invention. Also in the aforementioned third aspect of the present invention, the interlayer can be deposited on the substrate for subsequent provision of the protective film on the interlayer. The provision of the interlayer serves to improve adherence of the protective film to the sliding surface.

FIG. **21** shows a mask **49** disposed above the interlayer **56**. The mask **49** has openings **49***a* provided at predetermined locations. A first protective film is to be deposited on the interlayer **56** through the mask **49**.

FIG. **22** shows the first protective film **57** such deposited on the interlayer **56** through the mask **49**.

A second protective film **58** is then deposited over an entire upper surface of the substrate **55**. The first protective film **57** and the second protective film **58**, formed in the manner as described above, together constitute a protective film **59**. The protective film **59** has relatively thick, projected portions **59***a* at locations where the first protective films **57** reside, and relatively thin, depressed portions **59***b* at locations where the first protective films **57** are devoid. Accordingly, a protective film can be formed which has projected and depressed portions arranged in a striped pattern, analogous to the protective film **52** shown in FIGS. **15** and **16**, for example, by providing a striped pattern of the first protective film **57**. Also, a desired design, pattern or character can be given on the protective film, by providing the first protective film **57** at locations where relatively thick, projected portions are desired to be formed. Furthermore, such a design or the other can be given by different color tones, by using as the protective film a particular film which, due to optical interference, presents different color tones depending on its thickness.

A specific example of depositing a protective film on a sliding member in accordance with the first aspect of the present invention is described below.

Example of Depositing a Hard Carbon Film on an Electric Shaver Inner Blade

First, an Si interlayer was deposited on an electric shaver inner blade made of a stainless steel (SUS) by using a CVD method. In depositing a film on the sliding surface **12** of the electric shaver inner blade **11**, the following procedure was followed. As shown in FIG. **8**, plural electric shaver inner blades **11**, arranged side by side on a holder **20**, were flanked by a pair of jigs **21** and **22**. Then, a film was deposited to cover all of the respective sliding surfaces **12** of the electric shaver inner blades.

In depositing a film on a side of the electric shaver inner blade **11**, the following procedure was followed. The plural electric shaver inner blades **11** were arranged end to end on a holder **23** so as for one side **13** of each electric shaver inner blade **11** to face upward. Then, a film was deposited to cover all of the respective sides **13** of the electric shaver inner blades **11**.

The Si interlayer was deposited on each of the sliding surface **12** and sides **13**, **14** to a thickness of 500 Å.

Thereafter, a diamond-like carbon film was deposited on the interlayer of the electric shaver inner blade. The diamond-like carbon film was deposited, through the interlayer, not only on the sliding surface in the manner as shown in FIG. **8**, but also on each side in the manner as shown in FIG. **9**.

FIG. **10** is a schematic sectional view showing an exemplary ECR plasma CVD apparatus for use in the formation of a diamond-like carbon film. Referring to FIG. **10**, a vacuum chamber **38** has a plasma generation chamber **34** to which one end of a waveguide **32** is connected. Another end of the waveguide **32** is mounted to a microwave supplying means **31**. A microwave generated in the microwave supplying means **31** passes through the waveguide **12** and a microwave inlet window **33** to be guide into the plasma generation chamber **34**. The plasma generation chamber **34** is provided with a gas inlet line **35** for introducing a discharge gas such as an argon (Ar) gas thereinto. Also, a number of plasma magnetic field generators **36** is mounted around the plasma generation chamber **34**. A high-density ECR plasma can be generated within the plasma generation chamber **34** through the interaction of a radio-frequency

magnetic field produced by the microwave and a magnetic field produced by the plasma magnetic field generators **36**.

The vacuum chamber **38** houses a holder **37** on which a sample piece **30** is placed for coverage with a diamond-like carbon film. The holder **37** is electrically connected to a radio-frequency power source **40**. The application of an RF power from the radio-frequency power source **40** to the holder **37** causes the sample piece to generate a self-bias voltage. The vacuum chamber **38** is also provided with a source gas inlet line **39** for introducing thereinto a source gas, such as methane (CH_4) or hydrogen (H_2). The source gas, when introduced from the source gas inlet line **39**, is decomposed by the action of a plasma from the plasma generation chamber **34**, resulting in the deposition of a diamond-like carbon film on the sample piece **30**.

The following film-forming conditions were employed: Ar gas partial pressure of 5.7×10^{-4} Torr., CH4 gas partial pressure of 1.3×10^{-3} Torr., microwave frequency of 2.45 GHz, and microwave power of 100 W. A 13.56 MHZ RF power from the radio-frequency power source **40** was applied to the holder in a controlled fashion so that a self-bias voltage of −50 V was generated at the sample piece **30**.

First, a sample of electric shaver inner blade was fabricated which had a 2000 Å thick, diamond-like carbon film solely on its sliding surface **12**. The sample inner blade of electric shaver was combined with an electric shaver outer blade, made of SUS, to set an electric shaver which was continuously operated for two weeks. Thereafter, the electric shaver inner blade was observed for a degree of wear. As a result, delamination or partial cutout of the diamond-like carbon film, as a protective film, was noticed at the edges **12***a* (see FIGS. **2** and **7**) of the electric shaver inner blade **12** where its sliding surface **12** met respective sides **13** and **14**.

Next, a protective film, i.e., a diamond-like film was deposited on each of a sliding surface and both sides of an electric shaver inner blade. In depositing the diamond-like carbon film on each side, its thickness was altered at 1000 Å, 2000 Å, and 3000 Å. As a result, three types of sample inner blades were fabricated. In the same manner as described above, each sample inner blade thus obtained was combined with an electric shaver outer blade, made of SUS, to set an electric shaver which was continuously operated for two weeks. Thereafter, the electric shaver inner blade was observed for a degree of wear. For those inner blades having different thicknesses, neither delamination of the diamond-like carbon film nor partial cutout thereof at the edges **12***a* was noticed. The delamination of the protective film or partial cutout thereof at the edges can be prevented by depositing the protective film not only on the sliding surface but also on the region(s) immediately adjacent the sliding surface.

Then, these shavers were used to cut acrylic, artificial hairs. The cut surfaces of hairs were observed to count the proportion thereof that exhibited good cut surfaces. The electric shaver inner blades respectively carrying 1000 Å, 2000 Å and 3000 Å thick, protective films on their sides gave the results of 95%, 80% and 65%, respectively.

It has been found from these results that the cutting quality of electric shaver is reduced as the thickness (3000 Å) of protective film on each side exceeds the thickness (2000 Å) on the sliding surface, i.e., as the ratio d**1**/d**2** falls below 1. This reduced cutting quality of electric shaver is believed likely due to the increased thickness of protective film on the sides relative to the protective film on the sliding surface, which reduces the sharpness of the inner blade edges.

In the same manner as described above, the sample inner blades of electric shaver were fabricated. A diamond-like carbon film was deposited on a sliding surface of each sample inner blade to a thickness of 2000 Å. Also, a diamond-like carbon film was deposited on respective sides of the sample inner blades to the following different thicknesses; 200 Å (d**1**/d**2**=10.0), 400 Å (d**1**/d**2**=5.0), 600 Å (d**1**/d**2**=3.3), 1000 Å (d**1**/d**2**=2.0), 1800 Å (d**1**/d**2**=1.1), 1900 Å (d**1**/d**2**=1.05), 2000 Å (d**1**/d**2**=1.0) and 3000 Å (d**1**/d**2**=0.7). These sample inner blades were observed for occurrence of delamination of protective film or partial cutout thereof at the edges of sliding surface, and were also evaluated for cutting qualities thereof in the same manner as described above. The results are given in FIG. **12**. In FIG. **12**, ○ indicates the degree of occurrence of delamination or partial cutout of the protective film. Fifty samples were prepared for each sample inner blade, and evaluation was made by counting the number of samples, out of fifty samples, that exhibited neither delamination of the protective film nor partial cutout thereof at the edges of sliding surface and determining the rate. Accordingly, 100% indicates that neither delamination of the protective film nor partial cutout thereof at the edges of sliding surface was noticed.

Also, ▲ indicates the level of cutting quality. In the same manner as above, fifty samples were prepared for each sample inner blade. After cutting of acrylic, artificial hairs by using those samples, evaluation was made by counting the number of samples, out of fifty samples, that imparted good cut surfaces to the respective hairs and determining the rate.

As can be appreciated from FIG. **12**, the electric shaver inner blade, if its d**1**/d**2** falls within the range of 1.05~5.0, more preferably within the range of 1.1~3.3, exhibits reduced occurrence of delamination or partial cutout of the protective film, as well as an increased level of cutting quality.

Example of Depositing a Hard Carbon Film on an Electric Shaver Outer Blade

Next, a diamond-like carbon film, as a protective film, was formed on an electric shaver outer blade made of Ni. In the same manner as in the above Example, an Si interlayer was formed on each of outer and inner surfaces of the electric shaver outer blade to a thickness of 500 Å. Also in the same manner as described above, the ECR plasma CVD apparatus was employed to form the diamond-like carbon film, through the interlayer, exclusively on the inner surface (including the sliding surface **2**) shown in FIG. **6** to a thickness of 2000 Å.

This sample outer blade having the outer surface left uncovered by a diamond-like carbon film was combined with an electric shaver inner blade, made of SUS, to set an electric shaver which was then operated continuously for two weeks. The inner surface of outer blade was subsequently observed for degree of wear. The partial cutouts of the diamond-like carbon film, as the protective film, were noticed at the edges of the sliding surface.

Sample outer blades were then fabricated carrying a diamond-like carbon film not only on the inner surface but also on the outer surface **3** shown in FIG. **6**. However, those sample outer blades had 1000 Å, 2000 Å and 3000 Å thick, diamond-like carbon films on their respective outer surfaces.

Each of the sample outer blades thus obtained was combined with an inner blade made of SUS to set an electric shaver for continuous operation, in the same manner as

described above. The sample outer blades were observed for degree of wear. None of those sample outer blades showed cutout of protective film at the edges of sliding surface. This demonstrates that the deposition of protective film not only on the sliding surface but also on its adjacent surface regions of the electric shaver outer blade effectively prevents delamination of the protective film, as well as cutout of the protective film at the edges of sliding surface.

The sample outer blades were then subjected to the aforementioned cutting test using artificial hairs. The sample outer blades respectively carrying 1000 Å, 2000 Å and 3000 Å thick protective films on their respective outer surfaces gave the results of 95%, 80% and 65%, respectively. It has been found from these results that as the thickness d**2** of protective film on the outer surface exceeds the thickness d**1** on the sliding surface within the inner surface, i.e., as the ratio d**1**/d**2** falls below 1, the sharpness of the outer blade is reduced at its edges, resulting in reduced cutting quality of the electric shaver incorporating such an outer blade.

Pursuant to the aforementioned procedures, the outer blade of electric shaver was fabricated. A diamond-like carbon film was deposited on an inner surface of the outer blade to a thickness of 2000 Å. Also, a diamond-like carbon film was deposited on an outer surface of the outer blade to the following different thicknesses; 200 Å (d**1**/d**2**=10.0), 400 Å (d**1**/d**2**=5.0), 600 Å (d**1**/d**2**=3.3), 1000 Å (d**1**/d**2**=2.0), 1800 Å (d**1**/d**2**=1.1), 1900 Å (d**1**/d**2**=1.05), 2000 Å (d**1**/d**2**=1.0) and 3000 Å (d**1**/d**2**=0.7). The sample outer blades thus obtained were observed for occurrence of delamination of the protective film or partial cutout at the edges of sliding surface, and were also evaluated for a level of cutting quality in the same manner as described above. The results are given in FIG. **13**. In FIG. **13**, ○ indicates the degree of occurrence of delamination or partial cutout of the protective film. Fifty samples were prepared for each sample outer blade, and evaluation was made by counting the number of samples, out of fifty samples, that exhibited neither delamination of protective film nor partial cutout thereof at the edges of sliding surface and determining the rate. Accordingly, 100% indicates that neither delamination of the protective film nor partial cutout thereof at the edges of sliding surface film was noticed.

Also, ▲ indicates the level of cutting quality. In the same manner as above, fifty samples were prepared for each sample outer blade. After cutting of acrylic, artificial hairs by using the samples, evaluation was made by counting the number of samples, out of fifty samples, that imparted good cut surfaces to the respective hairs and determining the rate.

As can be appreciated from FIG. **13**, the electric shaver outer blade, if its d**1**/d**2** falls within the range of 1.05~5.0, more preferably within the range of 1.1~3.3, exhibits reduced occurrence of delamination or partial cutout of its protective film, as well as increased level of cutting quality.

Example of Depositing a Zirconium Nitride (ZrN) Film on an Electric Shaver Outer Blade

A ZrN film, as a protective film, was deposited on an electric shaver outer blade made of Ni. In this Example, the ZrN film was deposited directly on the electric shaver outer blade.

FIG. **11** shows an apparatus for vacuum deposition and ion implantation, for use in the formation of the ZrN film. A vacuum chamber **41** houses a holder **42** which is rotatable in the direction of the shown arrow at a rate of 10~20 rpm. The holder **42** mounts a sample piece **30** thereon. The vacuum chamber **41** is provided with an evaporation source **43** which evaporates zirconium (Zr) atoms for direction onto the sample piece **30**. The vacuum chamber is further provided with an assist ion gun **44** which is operable to either emit nitrogen ions (N^+) or supply a nitrogen gas (N_2) toward the sample piece **30**. This ion gun **44**, while emitting N^+ ions, may also emit nitrogen atoms (N), although slight in amount, which have failed to become ions.

The interior of vacuum chamber **41** is evacuated to a pressure of 10^{-5}~10^{-7} Torr., followed by supply of an N_2 gas into the assist ion gun **44** which emits N^+ ions toward a surface of the sample piece **30**. The acceleration voltage and ion current density of N^+ ions are set at 700 eV and 0.38 mA/cm^2, respectively.

Concurrently with the emission of N^+ ions by the assist ion gun, the evaporation source **43** is driven to evaporate Zr atoms for direction onto the surface of sample piece **30**. The evaporation rate of Zr is controlled to measure 650 Å/min when converted to a film-forming rate on the sample piece **30**.

In the procedure as stated above, a ZrN film was first formed solely on an inner surface of an electric shaver outer blade to a thickness of 2000 Å. The sample outer blade thus obtained was combined with an inner blade made of SUS to set an electric shaver for continuous operation, in the same manner as described above. The sample outer blade was observed for degree of wear of protective film provided on a sliding surface within its inner surface. The partial cutout of the protective film were noticed at the edges of sliding surface of the sample outer blade.

Next, a protective film, i.e., a ZrN film was deposited not only on the inner surface but also on an outer surface of the electric shaver outer blade. However, the ZrN film was deposited on the outer surface to different thicknesses; 1000 Å, 2000 Å and 3000 Å.

In the same manner as described above, each sample outer blade thus obtained was combined with an electric shaver inner blade to set an electric shaver for continuous operation. Thereafter, the sample outer blades were observed for degrees of wear at their respective sliding surfaces. None of them showed cutout of protective film at the edges of sliding surface. This demonstrates that the delamination of the protective film or partial cutout of the protective film at the edges of sliding surface can be prevented by depositing a protective film not only on the sliding surface but also on its adjacent, outer surface region around the opening.

Next, the shavers incorporating these sample outer blades were subjected to the cutting test using artificial hairs. The cutting qualities thereof were observed by counting the proportion of hairs which exhibited good cut surfaces. The electric shaver outer blades respectively carrying 1000 Å, 2000 Å and 3000 Å thick, protective films gave the results of 95%, 80% and 65%, respectively.

It has been found from these results that as the thickness d**2** of protective film on the outer surface region adjacent the sliding surface is controlled to exceed the thickness d**1** thereof on the sliding surface, i.e., as the ratio d**1**/d**2** is controlled to fall below 1, the sharpness of outer blade is reduced at the edges of its sliding surface to result in the reduced cutting quality thereof.

In the same manner as described above, a ZrN film was deposited on an inner surface of an electric shaver outer blade to a thickness of 2000 Å. Another ZrN film was formed on an outer surface of the outer blade to the following different thicknesses: 200 Å (d**1**/d**2**=10.0), 400 Å (d**1**/d**2**=5.0), 600 Å (d**1**/d**2**=3.3), 1000 Å (d**1**/d**2**=2.0), 1800 Å (d**1**/d**2**=1.1), 1900 Å (d**1**/d**2**=1.05), 2000 Å (d**1**/d**2**=1.0)

and 3000 Å (d**1**/d**2**=0.7). In the same manner as described above, the sample outer blades obtained were observed for occurrence of delamination of protective film or partial cutout thereof at the edges of sliding surface, and were also evaluated for cutting quality. The results are given in FIG. **14**. In FIG. **14**, ○ indicates the degree of occurrence of delamination of protective film or partial cutout thereof at the edges of sliding surface. Fifty samples were prepared for each sample outer blade, and evaluation was made by counting the number of samples, out of fifty samples, which exhibited neither delamination of protective film nor partial cutout thereof at the edges of sliding surface and determining the rate. Accordingly, 100% indicates that neither delamination of protective film nor partial cutout thereof at the edges of sliding surface was noticed.

Also, ▲ indicates the level of cutting quality. In the same manner as described above, fifty samples were prepared for each sample outer blade. After cutting of acrylic, artificial hairs by using the samples, evaluation was made by counting the number of samples, out of fifty samples, which imparted good cut surfaces to the respective hairs and determining the rate.

As can be appreciated from FIG. **14**, the electric shaver outer blade, if its d**1**/d**2** falls within the range of 1.05~5.0, more preferably within the range of 1.1~3.3, exhibits the reduced occurrence of delamination or partial cutout of its protective film, as well as increased cutting quality.

The specific examples will be below described which deposit a protective film on an electric shaver outer blade in accordance with the second through fourth aspects of the present invention.

EXAMPLE 1

In this Example, a diamond-like carbon film **61**, as a protective film, was deposited on an inner surface of an electric shaver outer blade **60** made of Ni, as shown in FIG. **24**. The openings provided in the electric shaver outer blade **60** for catching the beard was not shown in FIG. **24**. The electric shaver outer blade **60** shown in FIG. **24** assumes the configuration after subjected to bending processing. The protective film was deposited on the inner surface of the electric shaver outer blade **60** while in a plate form. First, a CVD method was employed, analogously to the above Examples, to deposit an Si interlayer on the inner surface of the plate-form, electric shaver outer blade to a thickness of 500 Å.

The plate-form, electric shaver outer blade carrying the interlayer thereon was then placed on a magnet, as shown in FIGS. **17** and **18**, which produced a distribution of lines of magnetic force above a surface on which a film is to be deposited. While they were maintained under such a condition, a diamond-like carbon film was deposited on the interlayer by employing the ECR plasma CVD apparatus. The positional arrangement of the electric shaver outer blade was adjusted so that a striped pattern consisting of projected and depressed portions of the deposited protective film **61** extends in the sliding direction of an electric shaver inner blade **62**, as shown in FIG. **24**. The projected portions of the protective film **61** are indicated by crosshatching in FIG. **24**. Since the electric shaver outer blade is formed from a magnetic material, it can be fixed on the magnet **53** by the action of magnetic force.

The protective film provided in the manner as stated above measured an average thickness of 2000 Å. The thinnest depressed portion measured a thickness of 1750 Å. The thickest projected portion measured a thickness of 2250 Å. Accordingly, the difference in height between such projected and depressed portions was 500 Å. A center distance between the depressed and projected portions was about 2 mm.

EXAMPLE 2

In the same manner as in Example, an Si interlayer was formed on an inner surface of the plate-form outer blade of electric shaver to a thickness of 500 Å. A diamond-like carbon film, as a protective film, was further deposited on the interlayer by using the method shown in FIGS. **21** through **23**. A 500 Å thick, diamond-like carbon film was deposited to provide a first protective film **57** shown in FIG. **22**. A center distance between the neighboring first protective films **57** was controlled at about 4 mm. Another diamond-like carbon film was deposited to provide a second protective film **58** shown in FIG. **23** having a thickness of about 1750 Å. Accordingly, the thickest projected portion **59***a* of the protective film **59** shown in FIG. **23** measured a thickness of about 2250 Å, while the thinnest depressed portion **59***b* thereof measured a thickness of 1750 Å. A center distance between the neighboring projected and depressed portions was about 2 mm.

Comparative Example 1

In the same manner as in Example 1, an Si interlayer was formed on an inner surface of the plate-form outer blade of electric shaver to a thickness of 500 Å. Thereafter, the ECR plasma CVD apparatus was employed to deposit a 2000 Å thick, diamond-like carbon film on the interlayer. This diamond-like carbon film was a film substantially uniform in thickness.

The electric shaver outer blades obtained from Examples 1 and 2 and Comparative Example 1 were then subjected to bending processing to impart the shape shown in FIG. **24** thereto. Each electric shaver outer blade was arranged to receive an electric shaver inner blade **62** inside thereof for evaluation of wearability. For comparative purposes, an electric shaver outer blade, carrying neither interlayer nor protective film on its inner surface, was also subjected to the evaluation of wearability (Comparative Example 2).

A load current of a motor when driving the electric shaver inner blade was measured. The evaluation in wearability of the outer blades was given by using relative values when the load current measured in Comparative Example 2 was taken as 1. Also, after the electric shaver inner blade was driven for 50 hours, the respective electric shaver outer blade was removed to visually observe any presence of scratches thereon for evaluation of scratch resistance.

The rating ○ indicates that no scratch was noticed, or scratches were noticed in a limited surface region of the outer blade. The rating Δ indicates that scratches were noticed over an entire surface of the outer blade. The rating × indicates that the outer blade was ultimately fractured.

The evaluation results are given in Table 1.

TABLE 1

	EXAMPLE 1	EXAMPLE 2	COMPARATIVE EXAMPLE 1	COMPARATIVE EXAMPLE 2
LOAD CURRENT (RELATIVE VALUE)	0.7	0.7	0.8	1.0
SCRATCH RESISTANCE	○	○	Δ	x

As can be appreciated from the results given in Table 1, the use of electric shaver outer blades of Examples 1 and 2, respectively irregularly-surfaced according to the second aspect of the present invention, results in the reduced load current to the motor, reduced frictional resistance and improved wear resistance. It can also be appreciated that the

respective inner surfaces of the electric shaver outer blades of Examples 1 and 2 were imparted thereto excellent scratch resistances.

Initially, the respective inner surfaces of the electric shaver outer blades of Examples 1 and 2 were visually observed as defining a striped pattern reflecting the varied film thickness. However, as the sliding movement of the inner blade continued for a prolonged period, the progressive wear of the protective film on the inner surface was observed which caused the striped pattern to gradually disappear. Accordingly, the observation of such a striped pattern can be helpful in finding the time to replace the outer blade of electric shaver.

Although the above Examples, according to the second aspect of the present invention, describe the deposition of irregularly-surfaced protective film on the inner surface of the electric shaver outer blade, such an irregularly-surfaced protective film may be deposited on an outer surface of the electric shaver outer blade. In this instance, the outer surface is a sliding surface for contact with a human skin.

In the above Examples according to the first and second aspects of the present invention, the present invention is illustrated as being applied to the inner and outer blades of electric shaver. However, the present invention is not limited to such applications, and can also be applied to sliding parts of a compressor such as a rotary compressor, sliding parts of VTR, thin-film magnetic heads, mask screens and the others.

ECR Plasma CVD Apparatus in Accordance with the Fifth Aspect of the Present Invention

FIG. **25** is a schematic sectional view showing an ECR plasma CVD apparatus in accordance with the fifth aspect of the present invention. Referring to FIG. **25**, a vacuum chamber **78** is provided with a plasma generation chamber **74** to which one end of a waveguide **72** is connected. Another end of the waveguide **72** is mounted to a microwave supplying means **71**. A microwave generated in the microwave supplying means **71** passes through the waveguide **72** and a microwave inlet window **73** to be guide into the plasma generation chamber **74**. The plasma generation chamber **74** is provided with a gas inlet line **75** for introducing a discharge gas such as an argon (Ar) gas into the plasma generation chamber **74**. The vacuum chamber **78** is further provided with a gas inlet line **82** for introducing a source gas, such as methane (CH_4), thereinto. A high density ECR plasma can be produced within the plasma generation chamber **74** through the interaction of a radio-frequency magnetic field produced by the microwave and a magnetic field produced by plasma magnetic field generators **76**. The vacuum chamber **78** encloses a substrate holder **77** on which a substrate is placed. An ion gun **80** is disposed in a suitable position for emission of an ion beam toward the substrate **79**. Connected to this ion gun **80** is a gas inlet line **81** for introducing thereinto a source gas which is to be converted to ions.

EXAMPLE 3

In this Example, the apparatus shown in FIG. **25** is employed to form a diamond-like carbon film, as a first protective film, on which a carbon nitride film is subsequently deposited as a second protective film, in accordance with the fifth aspect of the present invention.

A diamond-like carbon film was first deposited on a substrate by using the ECR plasma CVD method. While the interior of vacuum chamber **78** was evacuated to a pressure of 10^{-5}~10^{-7} Torr., an Ar gas was introduced into the plasma generation chamber **74** at a pressure of 2.5×10^{-4} Torr. for conversion to an Ar plasma within the plasma generation chamber **74**. A source gas, i.e., a CH_4 gas at a pressure of 3.0×10^{-4} Torr. was supplied to the vacuum chamber **78** in which the CH_4 gas was decomposed by the Ar plasma to result in the formation of the diamond-like carbon film on the substrate **79**. An Si substrate was employed for the substrate **79**. The film-forming rate and film thickness were 800 Å/min and 1200 Å, respectively.

Next, a nitrogen gas at a pressure of 2×10^{-4} Torr. from the gas inlet line **81** was delivered to the ion gun **80** which subsequently emitted nitrogen ions onto the substrate **79**, concurrently with the above-described formation of diamond-like carbon film by means of the ECR plasma CVD method. During the emission of nitrogen ions, the ion energy and ion current density were both varied with film-forming time, as shown in FIG. **26**. Specifically, the ion energy was decreasingly varied from 2 keV to 0 keV with film-forming time of the second film layer, and the ion current density was increasingly varied from 0 to 0.5 mA/cm^2 with film-forming time of the second film layer. In this manner, the formation of second film layer was continued for 0.5 minutes to provide the second film layer having a thickness of 400 Å. As a result, a film was formed including the first and second film layers. The thickness of the film thus totaled 1600 Å.

FIG. **27** is a sectional view showing the film obtained in the manner as described above. As shown in FIG. **27**, the first film layer **91**, consisting of the diamond-like carbon film, is deposited on the substrate **79**, and the second film layer **92**, consisting of the carbon nitride (CN) film, is deposited on the first film layer **91**.

FIG. **28** is a graph showing the analytical results of the second film layer **92** when subjected to the secondary mass ion spectrometry (SIMS). As can be appreciated from FIG. **28**, the second film layer has an increased nitrogen content toward its surface so that a concentration gradient of nitrogen is produced in its thickness direction.

The samples obtained were then evaluated for adherence. In evaluating the adherence, a constant load (2 kg) indentation test was conducted using a Vickers penetrator. Fifty samples were subjected to the test, and the number of samples that showed delamination of the film from the respective substrata was counted as indicating the level of adherence. For comparative purposes, an N_2 gas at 4×10^{-4} Torr., together with a CH_4 gas, were simultaneously introduced from the gas inlet line **82**. The ECR plasma CVD method was exclusively utilized to deposit a carbon nitride film on a substrate to a thickness of 1600 Å (Comparative Example 3-1). The samples obtained in Comparative Example 3-1 were likewise subjected to the indentation test using a Vickers penetrator for evaluation of adherence.

As a result, the number of samples that showed delamination amounted to 0 in Example 3 but to 40 in Comparative Example 3-1. These results demonstrate that the formation of carbon nitride film, i.e. the second film layer, on the diamond-like carbon film, i.e. the first film layer, improves adherence of the resulting film to the substrate.

Next, the films respectively obtained in Example 3 and Comparative Example 3-1 were measured for hardness. For comparative purposes, only the above procedure to form the first film layer was followed to solely form a diamond-like carbon film on a substrate to a thickness of 1600 Å (Comparative Example 3-2). Like the above, the film obtained in Comparative Example 3-2 was measured for hardness.

The hardness of the film obtained in Comparative Example 3-1, i.e., the hardness of the amorphous carbon

nitride film measured about 2500 Hv, while that of the film obtained in Example 3 measured 3400 Hv. The hardness of the film obtained in Comparative Example 3-2 measured 3500 Hv. These measurement results demonstrate that a film, if constructed by depositing the carbon nitride film, as the second film layer, on the diamond-like carbon film, as the first film layer, is capable of exhibiting the level of hardness almost comparable to that of the diamond-like film.

Next, the films respectively obtained in Example 3 and Comparative Example 3-2 were measured for coefficient of friction. The film of Comparative Example 3-2, a surface of which was defined by the diamond-like carbon film, exhibited a frictional coefficient of 0.18, while the film of Example 3 exhibited a noticeably reduced frictional coefficient of 0.13.

ECR Plasma CVD Apparatus in Accordance with the Sixth Aspect of the Present Invention

FIG. **29** is a schematic sectional view showing an ECR plasma CVD apparatus in accordance with the sixth aspect of the present invention. This apparatus is analogous in construction to the apparatus shown in FIG. **25**, with the exception that a radio-frequency power source **83** is electrically connected to the substrate holder **77** for applying a radio-frequency power to the substrate holder **77**. Accordingly, the detailed discussion of the present apparatus is omitted.

EXAMPLE 4

In this Example, the apparatus shown in FIG. **29** is employed to form a diamond-like carbon film, as a first film layer, on which a carbon nitride film is subsequently formed as a second film layer.

First, the interior of vacuum chamber **78** was evacuated to a pressure of 10^{-5}~10^{-7} Torr. Then, an Ar gas at a pressure of 2.5×10^{-4} Torr. was introduced into the plasma generation chamber **74** to produce an Ar plasma within the plasma generation chamber **74**. A source gas, i.e., a CH_4 gas at a pressure of 3.0×10^{-4} Torr. was supplied to the vacuum chamber **78** in which the CH_4 gas was subsequently decomposed by the Ar plasma to result in the formation of the diamond-like carbon film on the substrate **79**. While the formation of first film layer was continued for 1.5 minutes, a 13.56 MHZ radio-frequency power from the radio-frequency power source **83** was applied to the substrate holder so that a substrate was maintained at a bias voltage of −50 V. The film-forming rate was 800 Å/min and the thickness of first film layer was 1200 Å.

Next, a nitrogen gas at a pressure of 2.5×10^{-4} Torr. from the gas inlet line **81** was delivered to the ion gun **80** which emitted nitrogen ions onto the substrate **79**, concurrently with the above-described formation of diamond-like carbon film. The formation of second film layer was continued for 0.5 minutes to provide the second film layer, i.e., the carbon nitride film having a thickness of 400 Å. As a result, a film was formed including the first and second film layers. The thickness of the film thus totaled 1600 Å. During the formation of second film layer, the ion energy was decreasingly varied from 1 keV to 0 keV while the ion current density was increasingly varied from 0 to 0.5 mA/cm^2, as shown in FIG. **30**. Concurrently, a substrate bias voltage was varied from −1 kV to 0 kV, as shown in FIG. **31**. This resulted in the formation of second film layer which, analogous to the second film layer formed in Example 3, had an increased nitrogen content toward its surface so that a concentration gradient of nitrogen was produced in its thickness direction.

The samples obtained were then evaluated for adherence. In evaluating the adherence, a constant load (2 kg) indentation test was conducted using a Vickers penetrator. Fifty samples were subjected to the test and the number of samples that showed delamination of the film from the respective substrata was counted as indicating the level of adherence. For comparative purposes, an N_2 gas at 4×10^{-4} Torr., as well as a CH_4 gas, were simultaneously introduced from the gas inlet line **82**. The ECR plasma CVD method was exclusively utilized to form a carbon nitride film on a substrate to a thickness of 1600 Å (Comparative Example 4-1). The samples obtained in Comparative Example 4-1 were likewise subjected to the indentation test using a Vickers penetrator for evaluation of adherence.

As a result, the number of samples that showed delamination amounted to 0 in Example 4 but to 40 in Comparative Example 4-1. These results demonstrate that the deposition of carbon nitride film, as the second film layer, on the diamond-like carbon film, as the first film layer, improves the adherence of the resulting film to the substrate.

Next, the films respectively obtained in Example 4 and Comparative Example 4-1 were measured for hardness. For comparative purposes, only the aforementioned procedure to form the first film layer was followed to solely form a diamond-like carbon film on a substrate to a thickness of 1600 Å (Comparative Example 4-2). The film obtained in Comparative Example 4-2 was likewise measured for hardness.

The hardness of the film obtained in Comparative Example 4-1, i.e., the hardness of the amorphous carbon nitride film measured about 2500 Hv, while that of the film obtained in Example 4 measured 3400 Hv. The hardness of the film obtained in Comparative Example 4-2 measured 3500 Hv. These measurement results demonstrate that a film, if constructed by depositing the carbon nitride film, as the second film layer, on the diamond-like carbon film, as the first film layer, is capable of exhibiting the level of hardness almost comparable to that of the diamond-like film.

Next, the films respectively obtained in Example 4 and Comparative Example 4-2 were measured for coefficient of friction. The film of Comparative Example 4-2, a surface of which was defined by the diamond-like carbon film, exhibited a frictional coefficient of 0.18, while the film of Example 4 exhibited a noticeably reduced frictional coefficient of 0.13.

EXAMPLE 5

The apparatus shown in FIG. **29** is employed to form a diamond-like carbon film, as a first film layer, on which a carbon nitride film is subsequently formed as a second film layer, in accordance with the seventh aspect of the present invention. In the present Example, the ion gun **80** in the apparatus shown in FIG. **29** is unemployed.

First, the interior of vacuum chamber **78** was evacuated to a pressure of 10^{-5}~10^{-7} Torr. Then, an Ar gas at a pressure of 2.5×10^{-4} Torr. was introduced into the plasma generation chamber **74** to produce an Ar plasma within the plasma generation chamber **74**. A source gas, i.e., a CH_4 gas at 3.0×10^{-4} Torr. was supplied to the vacuum chamber **78** within which the CH_4 gas was decomposed by the Ar plasma to result in the formation of the diamond-like carbon film on the substrate **79**. While the formation of first film layer was continued for 1.5 minutes, a radio-frequency power from the radio-frequency power source **83** was applied to the substrate holder **77** so that a substrate was maintained at a bias voltage of −50 V. In the manner as described above, the first

film layer was formed at a film-forming rate of 800 Å/min to a thickness of 1200 Å.

A nitrogen gas as a second source gas, together with a CH_4 gas, were delivered to the vacuum chamber from the gas inlet line **82**. A second film layer, i.e., a carbon nitride film was deposited on the above-formed first film layer by the ECR plasma CVD technique using the mixed gas composed of CH_4 and nitrogen gases. The formation of second film layer was continued for 0.5 minutes to provide the carbon nitride film having a thickness of 400 Å. As a result, a film was formed including the first and second film layers. The thickness of the film thus totaled 1600 Å. During the formation of second film layer, the supply pressure of nitrogen gas, as the second source gas, was controlled to gradually increase from 0 to 4×10^{-4} Torr., as shown in FIG. **32**.

This resulted in the formation of second film layer which, analogous to the second film layers respectively formed in Examples 3 and 4, exhibited an increased nitrogen content toward its surface so that a concentration gradient of nitrogen was produced in its thickness direction.

The samples obtained were then evaluated for adherence. In evaluating the adherence, a constant load (2 kg) indentation test was conducted using a Vickers penetrator. Fifty samples were subjected to the test and the number of samples that showed delamination of the film from the substrata was counted as indicating the level of adherence. For comparative purposes, an N_2 gas at 4×10^{-4} Torr., together with a CH_4 gas, were simultaneously introduced from the gas inlet line **82**. The ECR plasma CVD method was exclusively utilized to deposit a carbon nitride film on a substrate to a thickness of 1600 Å (Comparative Example 5-1). The samples obtained in Comparative Example 5-1 were likewise subjected to the indentation test using a Vickers penetrator for evaluation of adherence.

As a result, the number of samples that showed delamination amounted to 0 in Example 5 but to 40 in Comparative Example 5-1. These results demonstrate that the deposition of carbon nitride film, as the second film layer, on the diamond-like carbon film, as the first film layer, improves the adherence of the resulting film to the substrate.

Next, the films respectively obtained in Example 5 and Comparative Example 5-1 were measured for hardness. For comparative purposes, only the aforementioned procedure to form the first film layer was followed to solely form a diamond-like carbon film on a substrate to a thickness of 1600 Å (Comparative Example 5-2). The film obtained in Comparative Example 5-2 was likewise measured for hardness.

The hardness of the film obtained in Comparative Example 5-1, i.e., the hardness of the amorphous carbon nitride film measured about 2000 Hv, while that of the film obtained in Example 5 measured 3200 Hv. The hardness of the film obtained in Comparative Example 5-2 measured 3500 Hv. These measurement results demonstrate that a film, if constructed according to the present invention, i.e., by depositing the carbon nitride film, as the second film layer, on the diamond-like carbon film, as the first film layer, is capable of exhibiting the level of hardness almost comparable to that of the diamond-like film.

Next, the films respectively obtained in Example 5 and Comparative Example 5-2 were measured for coefficient of friction. The film of Comparative Example 5-2, a surface of which was defined by the diamond-like carbon film, exhibited a frictional coefficient of 0.18, while the film of Example 5 exhibited a noticeably reduced frictional coefficient of 0.14.

EXAMPLE 6

In this Example, the apparatus shown in FIG. **25** is employed to form a diamond-like carbon film, as a first protective film, on which a carbon nitride film is subsequently deposited as a second protective film, in accordance with the fifth aspect of the present invention.

In the same manner as in Example 3, a first film layer, i.e., a diamond-like carbon film was first formed to a thickness of 1200 Å.

Next, a silane gas at a pressure of 2×10^{-4} Torr. from the gas inlet line **81** was delivered to the ion gun **80**, resulting in the deposition of a carbon silicide film, as a second film layer, on the first film layer. During the formation of second film layer, the ion energy was decreasingly varied while the ion current density was increasingly varied, respectively with film-forming time, as shown in FIG. **33**. In this manner, the formation of second film layer was continued for 0.5 minutes to provide the carbon silicide film having a thickness of 400 Å. As a result, a film was formed including the first and second film layers. The thickness of the film thus totaled 1600 Å.

In the same manner as in Example 3, the second film layer of each sample obtained was analyzed by using the secondary mass ion spectrometry (SIMS). As can be appreciated from FIG. **34**, the second film layer had an increased Si content toward its surface so that a concentration gradient of Si was produced in its thickness direction.

The samples obtained were then evaluated for adherence. In evaluating the adherence, a constant load (2 kg) indentation test was conducted using a Vickers penetrator. Fifty samples were subjected to the test and the number of samples that showed delamination of the film from the respective substrata was counted as indicating the level of adherence. For comparative purposes, a silane gas at 1.0×10^{-4} Torr., together with a CH_4 gas, were introduced from the gas inlet line **82**. The ECR plasma CVD method was exclusively utilized to deposit a carbon silicide film on a substrate to a thickness of 1600 Å (Comparative Example 6-1). Likewise, the samples obtained in Comparative Example 6-1 were subjected to the indentation test using a Vickers penetrator for evaluation of adherence.

As a result, the number of samples that showed delamination amounted to 0 in Example 6 but to 40 min Comparative Example 6-1. These results demonstrate that the deposition of the carbon silicide film, as the second film layer, on the diamond-like carbon film, as the first film layer, in accordance with the present invention, improves the adherence of the resulting film to the substrate.

Next, the films respectively obtained in Example 6 and Comparative Example 6-1 were measured for hardness. For comparative purposes, only the above procedure to form the first film layer was followed to solely form a diamond-like carbon film on a substrate to a thickness of 1600 Å (Comparative Example 6-2). Like the above, the film obtained in Comparative Example 3-2 was measured for hardness.

The hardness of the film obtained in Comparative Example 6-1, i.e., the hardness of the amorphous carbon silicide film measured about 2400 Hv, while that of the film obtained in Example 6 measured 3400 Hv. The hardness of the film obtained in Comparative Example 6-2 measured 3500 Hv. These measurement results demonstrate that a film, if constructed by depositing the carbon silicide film, as the second film layer, on the diamond-like carbon film, as the first film layer, is capable of exhibiting the level of hardness almost comparable to that of the diamond-like film.

Next, the films respectively obtained in Example 6 and Comparative Example 6-2 were measured for coefficient of friction. The film of Comparative Example 6-2, a surface of which was defined by the diamond-like carbon film, exhibited a frictional coefficient of 0.18, while the film of Example 6 exhibited a noticeably reduced frictional coefficient of 0.10.

As stated above, a film, if constructed by depositing the carbon nitride or carbon silicide film, as the second film layer, on the diamond-like carbon film as the first film layer, can be functional to exhibit an improved adhesion to the substrate, a higher degree of hardness and a reduced coefficient of friction.

In the above Examples, the CH4 gas is used as a source gas to form the a diamond-like carbon film which constitutes the first film layer. In depositing the second film layer, the nitrogen and silicon ions are further directed onto the first film layer to deposit the carbon nitride or carbon silicide film thereon. It has been found, however, that the same effect can be obtained by directing a carbon gas onto the first film layer to deposit the second film layer thereon. That is, another diamond-like carbon film can be deposited as the second film layer, which has an increased level of hardness compared to the first film layer.

Also, in depositing the second film layer, the mixed ions, composed of nitrogen and oxygen ions, may be directed onto the first film layer to deposit thereon an oxygen-containing carbon nitride film which also exhibits an increased level of hardness and a reduced coefficient of friction.

Although the ion irradiation is used in the above Examples to deposit the second film layer, a radical irradiation may alternatively be used to obtain the same effect. The radical irradiation can be effected by using a radical gun, for example.

The films of the present invention, including those formed by using the film-forming methods in accordance with the fifth through seventh aspects of the present invention, can be employed to constitute protective films for sliding parts such as inner and outer blades of an electric shaver, and for sliding parts such as of a VTR and a compressor including a rotary compressor. They are also applicable for a protective film as a constituent layer of an solar cell, a protective film for sliding parts of a film magnetic head, a propagation film of an SAW device, or a film for a sensor.

The delamination or cutout of the protective film on the sliding surface can be prevented if the value d**1**/d**2**, which is the ratio of the thickness d**1** of protective film overlying the sliding surface to the thickness d**2** of protective film overlying the surface region immediately adjacent the sliding surface, is controlled to be 1 or greater in accordance with the first aspect of the present invention.

In accordance with the second aspect of the present invention, a reduced coefficient of friction and an improved wear-resistance can be imparted to the protective film.

In accordance with the third and fourth aspects of the present invention, the irregularly-surfaced protective film according to the second aspect of the present invention can be formed efficiently.

In accordance with the fifth through seventh aspects of the present invention, the film having the desired functions and adhering well to the substrate can be formed by using the plasma CVD method.

What is claimed is:

1. An electric shaver outer blade having at least one bore formed therein defining a hole for catching a beard, and a sliding surface for sliding contact with an electric shaver inner blade on an inner surface region around said hole for catching the beard, said sliding surface projecting toward said inner blade and having a protective film deposited not only on said sliding surface but also on an outer surface region around said hole in such a manner that d**1**/d**2** is controlled to be within a range of 1.1–3.3 where d**1** is a thickness of the protective film deposited on the sliding surface and d**2** is a thickness of the protective film deposited on said outer surface region, the protective film comprising a hard carbon film formed of a diamond and/or amorphous carbon containing a diamond structure and wherein the protective film having a thickness d**1** is disposed across the entire sliding surface of the outer blade during operation, said entire sliding surface being flat.

2. An electric shaver inner blade having at a distal end a sliding surface for sliding contact with an electric shaver outer blade, said inner blade having a protective film deposited not only on said sliding surface but also on a side region immediately adjacent said sliding surface in such a manner that d**1**/d**2** is controlled to be within a range of 1.1–3.3, where d**1** is a thickness of the protective film deposited on the sliding surface and d**2** is a thickness of the protective film deposited on the side region immediately adjacent the sliding surface, the protective film comprising a hard carbon film formed of diamond and/or amorphous carbon containing a diamond structure and wherein the protective film having a thickness d**1** is disposed across the entire sliding surface of the inner blade during a shaving operation.

3. A sliding member having a sliding surface for sliding contact with a cooperative member, said sliding member having a protective film deposited not only on said sliding surface but also on a surface region immediately adjacent the sliding surface in such a manner that d**1**/d**2** is controlled to be within a range of 1.1–3.3, where d**1** is a thickness of the protective film deposited on the sliding surface and d**2** is a thickness of the protective film deposited on the surface region immediately adjacent the sliding surface, the protective film comprising a hard carbon film formed of diamond and/or amorphous carbon containing a diamond structure and wherein the protective film having a thickness d**1** is disposed across the entire sliding surface of the sliding member during a sliding operation.

4. The sliding member of claim **3**, wherein said protective film has a hardness of not less than 1000 Hv.

5. The sliding member of claim **3**, wherein said surface region adjacent the sliding surface is on a surface angularly oriented with respect to the sliding surface.

* * * * *

UNITED STATES DISTRICT COURT
CENTRAL DISTRICT OF CALIFORNIA

NOTICE OF ASSIGNMENT TO UNITED STATES JUDGES

This case has been assigned to District Judge James V. Selna and the assigned Magistrate Judge is Jean P. Rosenbluth.

The case number on all documents filed with the Court should read as follows:

SACV13-01481 JVS (JPRx)

Pursuant to General Order 05-07 of the United States District Court for the Central District of California, the Magistrate Judge has been designated to hear discovery related motions.

All discovery related motions should be noticed on the calendar of the Magistrate Judge.

Clerk, U. S. District Court

September 23, 2013
Date

By Lori Wagers
Deputy Clerk

NOTICE TO COUNSEL

A copy of this notice must be served with the summons and complaint on all defendants (if a removal action is filed, a copy of this notice must be served on all plaintiffs).

Subsequent documents must be filed at the following location:

☐ Western Division
312 N. Spring Street, G-8
Los Angeles, CA 90012

☒ Southern Division
411 West Fourth St., Ste 1053
Santa Ana, CA 92701

☐ Eastern Division
3470 Twelfth Street, Room 134
Riverside, CA 92501

Failure to file at the proper location will result in your documents being returned to you.

JS 44 (Rev. 12/12)

CIVIL COVER SHEET

The JS 44 civil cover sheet and the information contained herein neither replace nor supplement the filing and service of pleadings or other papers as required by law, except as provided by local rules of court. This form, approved by the Judicial Conference of the United States in September 1974, is required for the use of the Clerk of Court for the purpose of initiating the civil docket sheet. *(SEE INSTRUCTIONS ON NEXT PAGE OF THIS FORM.)*

I. (a) PLAINTIFFS
DIAMOND COATING TECHNOLOGIES, LLC

(b) County of Residence of First Listed Plaintiff _____
(EXCEPT IN U.S. PLAINTIFF CASES)

(c) Attorneys *(Firm Name, Address, and Telephone Number)*
Susman Godfrey L.L.P., 1901 Avenue of the Stars, Ste. 950
Los Angeles, CA 90067

DEFENDANTS
NISSAN NORTH AMERICA, INC., AND NISSAN MOTOR CO., LTD

County of Residence of First Listed Defendant Williamson
(IN U.S. PLAINTIFF CASES ONLY)
NOTE: IN LAND CONDEMNATION CASES, USE THE LOCATION OF THE TRACT OF LAND INVOLVED.

Attorneys *(If Known)*

II. BASIS OF JURISDICTION *(Place an "X" in One Box Only)*

- ☐ 1 U.S. Government Plaintiff
- ☒ 3 Federal Question *(U.S. Government Not a Party)*
- ☐ 2 U.S. Government Defendant
- ☐ 4 Diversity *(Indicate Citizenship of Parties in Item III)*

III. CITIZENSHIP OF PRINCIPAL PARTIES *(Place an "X" in One Box for Plaintiff and One Box for Defendant)*
(For Diversity Cases Only)

	PTF	DEF		PTF	DEF
Citizen of This State	☐ 1	☐ 1	Incorporated *or* Principal Place of Business In This State	☐ 4	☐ 4
Citizen of Another State	☐ 2	☐ 2	Incorporated *and* Principal Place of Business In Another State	☐ 5	☐ 5
Citizen or Subject of a Foreign Country	☐ 3	☐ 3	Foreign Nation	☐ 6	☐ 6

IV. NATURE OF SUIT *(Place an "X" in One Box Only)*

CONTRACT
- ☐ 110 Insurance
- ☐ 120 Marine
- ☐ 130 Miller Act
- ☐ 140 Negotiable Instrument
- ☐ 150 Recovery of Overpayment & Enforcement of Judgment
- ☐ 151 Medicare Act
- ☐ 152 Recovery of Defaulted Student Loans (Excludes Veterans)
- ☐ 153 Recovery of Overpayment of Veteran's Benefits
- ☐ 160 Stockholders' Suits
- ☐ 190 Other Contract
- ☐ 195 Contract Product Liability
- ☐ 196 Franchise

REAL PROPERTY
- ☐ 210 Land Condemnation
- ☐ 220 Foreclosure
- ☐ 230 Rent Lease & Ejectment
- ☐ 240 Torts to Land
- ☐ 245 Tort Product Liability
- ☐ 290 All Other Real Property

TORTS

PERSONAL INJURY
- ☐ 310 Airplane
- ☐ 315 Airplane Product Liability
- ☐ 320 Assault, Libel & Slander
- ☐ 330 Federal Employers' Liability
- ☐ 340 Marine
- ☐ 345 Marine Product Liability
- ☐ 350 Motor Vehicle
- ☐ 355 Motor Vehicle Product Liability
- ☐ 360 Other Personal Injury
- ☐ 362 Personal Injury - Medical Malpractice

PERSONAL INJURY
- ☐ 365 Personal Injury - Product Liability
- ☐ 367 Health Care/ Pharmaceutical Personal Injury Product Liability
- ☐ 368 Asbestos Personal Injury Product Liability

PERSONAL PROPERTY
- ☐ 370 Other Fraud
- ☐ 371 Truth in Lending
- ☐ 380 Other Personal Property Damage
- ☐ 385 Property Damage Product Liability

CIVIL RIGHTS
- ☐ 440 Other Civil Rights
- ☐ 441 Voting
- ☐ 442 Employment
- ☐ 443 Housing/ Accommodations
- ☐ 445 Amer. w/Disabilities - Employment
- ☐ 446 Amer. w/Disabilities - Other
- ☐ 448 Education

PRISONER PETITIONS

Habeas Corpus:
- ☐ 463 Alien Detainee
- ☐ 510 Motions to Vacate Sentence
- ☐ 530 General
- ☐ 535 Death Penalty

Other:
- ☐ 540 Mandamus & Other
- ☐ 550 Civil Rights
- ☐ 555 Prison Condition
- ☐ 560 Civil Detainee - Conditions of Confinement

FORFEITURE/PENALTY
- ☐ 625 Drug Related Seizure of Property 21 USC 881
- ☐ 690 Other

LABOR
- ☐ 710 Fair Labor Standards Act
- ☐ 720 Labor/Management Relations
- ☐ 740 Railway Labor Act
- ☐ 751 Family and Medical Leave Act
- ☐ 790 Other Labor Litigation
- ☐ 791 Employee Retirement Income Security Act

IMMIGRATION
- ☐ 462 Naturalization Application
- ☐ 465 Other Immigration Actions

BANKRUPTCY
- ☐ 422 Appeal 28 USC 158
- ☐ 423 Withdrawal 28 USC 157

PROPERTY RIGHTS
- ☐ 820 Copyrights
- ☒ 830 Patent
- ☐ 840 Trademark

SOCIAL SECURITY
- ☐ 861 HIA (1395ff)
- ☐ 862 Black Lung (923)
- ☐ 863 DIWC/DIWW (405(g))
- ☐ 864 SSID Title XVI
- ☐ 865 RSI (405(g))

FEDERAL TAX SUITS
- ☐ 870 Taxes (U.S. Plaintiff or Defendant)
- ☐ 871 IRS—Third Party 26 USC 7609

OTHER STATUTES
- ☐ 375 False Claims Act
- ☐ 400 State Reapportionment
- ☐ 410 Antitrust
- ☐ 430 Banks and Banking
- ☐ 450 Commerce
- ☐ 460 Deportation
- ☐ 470 Racketeer Influenced and Corrupt Organizations
- ☐ 480 Consumer Credit
- ☐ 490 Cable/Sat TV
- ☐ 850 Securities/Commodities/ Exchange
- ☐ 890 Other Statutory Actions
- ☐ 891 Agricultural Acts
- ☐ 893 Environmental Matters
- ☐ 895 Freedom of Information Act
- ☐ 896 Arbitration
- ☐ 899 Administrative Procedure Act/Review or Appeal of Agency Decision
- ☐ 950 Constitutionality of State Statutes

V. ORIGIN *(Place an "X" in One Box Only)*

☒ 1 Original Proceeding ☐ 2 Removed from State Court ☐ 3 Remanded from Appellate Court ☐ 4 Reinstated or Reopened ☐ 5 Transferred from Another District *(specify)* ☐ 6 Multidistrict Litigation

VI. CAUSE OF ACTION
Cite the U.S. Civil Statute under which you are filing *(Do not cite jurisdictional statutes unless diversity)*:
28 U.S.C. §§ 1331 and 1338(a) and 35 U.S.C. §§ 1 et seq.
Brief description of cause:
COMPLAINT FOR PATENT INFRINGEMENT

VII. REQUESTED IN COMPLAINT: ☐ CHECK IF THIS IS A CLASS ACTION UNDER RULE 23, F.R.Cv.P. DEMAND $ CHECK YES only if demanded in complaint: JURY DEMAND: ☒ Yes ☐ No

VIII. RELATED CASE(S) IF ANY *(See instructions)*: Diamond Coating Technologies, LLC v. Hyundai Motor America and Hyundai Motor Company filed concurrently.
JUDGE TBD DOCKET NUMBER TBD

DATE 09/23/2013 SIGNATURE OF ATTORNEY OF RECORD Kathryn P. Hoek

FOR OFFICE USE ONLY

RECEIPT # _____ AMOUNT _____ APPLYING IFP _____ JUDGE _____ MAG. JUDGE _____

SACV13-01481 JVS (JPRx)

JS 44 Reverse (Rev. 12/12)

INSTRUCTIONS FOR ATTORNEYS COMPLETING CIVIL COVER SHEET FORM JS 44

Authority For Civil Cover Sheet

The JS 44 civil cover sheet and the information contained herein neither replaces nor supplements the filings and service of pleading or other papers as required by law, except as provided by local rules of court. This form, approved by the Judicial Conference of the United States in September 1974, is required for the use of the Clerk of Court for the purpose of initiating the civil docket sheet. Consequently, a civil cover sheet is submitted to the Clerk of Court for each civil complaint filed. The attorney filing a case should complete the form as follows:

I.(a) **Plaintiffs-Defendants.** Enter names (last, first, middle initial) of plaintiff and defendant. If the plaintiff or defendant is a government agency, use only the full name or standard abbreviations. If the plaintiff or defendant is an official within a government agency, identify first the agency and then the official, giving both name and title.

(b) **County of Residence.** For each civil case filed, except U.S. plaintiff cases, enter the name of the county where the first listed plaintiff resides at the time of filing. In U.S. plaintiff cases, enter the name of the county in which the first listed defendant resides at the time of filing. (NOTE: In land condemnation cases, the county of residence of the "defendant" is the location of the tract of land involved.)

(c) **Attorneys.** Enter the firm name, address, telephone number, and attorney of record. If there are several attorneys, list them on an attachment, noting in this section "(see attachment)".

II. **Jurisdiction.** The basis of jurisdiction is set forth under Rule 8(a), F.R.Cv.P., which requires that jurisdictions be shown in pleadings. Place an "X" in one of the boxes. If there is more than one basis of jurisdiction, precedence is given in the order shown below.
United States plaintiff. (1) Jurisdiction based on 28 U.S.C. 1345 and 1348. Suits by agencies and officers of the United States are included here.
United States defendant. (2) When the plaintiff is suing the United States, its officers or agencies, place an "X" in this box.
Federal question. (3) This refers to suits under 28 U.S.C. 1331, where jurisdiction arises under the Constitution of the United States, an amendment to the Constitution, an act of Congress or a treaty of the United States. In cases where the U.S. is a party, the U.S. plaintiff or defendant code takes precedence, and box 1 or 2 should be marked.
Diversity of citizenship. (4) This refers to suits under 28 U.S.C. 1332, where parties are citizens of different states. When Box 4 is checked, the citizenship of the different parties must be checked. (See Section III below; **NOTE: federal question actions take precedence over diversity cases.**)

III. **Residence (citizenship) of Principal Parties.** This section of the JS 44 is to be completed if diversity of citizenship was indicated above. Mark this section for each principal party.

IV. **Nature of Suit.** Place an "X" in the appropriate box. If the nature of suit cannot be determined, be sure the cause of action, in Section VI below, is sufficient to enable the deputy clerk or the statistical clerk(s) in the Administrative Office to determine the nature of suit. If the cause fits more than one nature of suit, select the most definitive.

V. **Origin.** Place an "X" in one of the six boxes.
Original Proceedings. (1) Cases which originate in the United States district courts.
Removed from State Court. (2) Proceedings initiated in state courts may be removed to the district courts under Title 28 U.S.C., Section 1441. When the petition for removal is granted, check this box.
Remanded from Appellate Court. (3) Check this box for cases remanded to the district court for further action. Use the date of remand as the filing date.
Reinstated or Reopened. (4) Check this box for cases reinstated or reopened in the district court. Use the reopening date as the filing date.
Transferred from Another District. (5) For cases transferred under Title 28 U.S.C. Section 1404(a). Do not use this for within district transfers or multidistrict litigation transfers.
Multidistrict Litigation. (6) Check this box when a multidistrict case is transferred into the district under authority of Title 28 U.S.C. Section 1407. When this box is checked, do not check (5) above.

VI. **Cause of Action.** Report the civil statute directly related to the cause of action and give a brief description of the cause. **Do not cite jurisdictional statutes unless diversity.** Example: U.S. Civil Statute: 47 USC 553 Brief Description: Unauthorized reception of cable service

VII. **Requested in Complaint.** Class Action. Place an "X" in this box if you are filing a class action under Rule 23, F.R.Cv.P.
Demand. In this space enter the actual dollar amount being demanded or indicate other demand, such as a preliminary injunction.
Jury Demand. Check the appropriate box to indicate whether or not a jury is being demanded.

VIII. **Related Cases.** This section of the JS 44 is used to reference related pending cases, if any. If there are related pending cases, insert the docket numbers and the corresponding judge names for such cases.

Date and Attorney Signature. Date and sign the civil cover sheet.