COPY

KILPATRICK TOWNSEND & STOCKTON LLP
Emil W. Herich (SBN 116783)
eherich@kilpatricktownsend.com
9720 Wilshire Blvd.
Los Angeles, CA 90212
Telephone: (310) 777-3730
Facsimile: (310) 388-5364

KILPATRICK TOWNSEND & STOCKTON LLP
Steven D. Moore (SBN 290875)
smoore@kilpatricktownsend.com
Eighth Floor, Two Embarcadero Center
San Francisco, CA 94111
Telephone: (415) 273-4741
Facsimile: (415) 651-8510

KILPATRICK TOWNSEND & STOCKTON LLP
Erwin L. Cena (SBN 272960)
ecena@kilpatricktownsend.com
Suite 400, 12730 High Bluff Dr.
San Diego, CA 92130
Telephone: (858) 350-6162
Facsimile: (858) 350-6111

Attorneys for Plaintiff MAG Aerospace Industries, Inc.

FILED
CLERK, U.S. DISTRICT COURT
AUG 20 2013
CENTRAL DISTRICT OF CALIFORNIA
BY DEPUTY

UNITED STATES DISTRICT COURT

CENTRAL DISTRICT OF CALIFORNIA

WESTERN DIVISION

MAG AEROSPACE INDUSTRIES, INC., a Delaware Corporation

Plaintiff,

v.

B/E AEROSPACE, INC., a Florida corporation,

Defendant.

CASE NO. CV 13-06089 JFW (FFMx)

COMPLAINT FOR PATENT INFRINGEMENT AND DEMAND FOR JURY TRIAL

Plaintiff MAG Aerospace Industries, Inc. ("MAG Aerospace") hereby files this Complaint and Jury Demand against Defendant B/E Aerospace, Inc. ("B/E Aerospace"), and alleges as follows:

JURISDICTION

1. This Court has jurisdiction over the subject matter of this action pursuant to 35 U.S.C. §§ 271 *et seq.* and 28 U.S.C. §§ 1331 and 1338. This Court has personal jurisdiction over B/E Aerospace because, upon information and belief, B/E Aerospace has committed and continues to commit acts of patent infringement within the Central District of California, and because B/E Aerospace has facilities in and continuously and systematically conducts business within the Central District of California.

VENUE

2. Venue is proper in this Court pursuant to 28 U.S.C. §§ 1391 and 1400(b) because a substantial part of the events giving rise to the claims at issue occurred in this district and because B/E Aerospace, which has places of business in Anaheim, California, Carson, California, and Corona, California, resides within this judicial district.

NATURE OF THE ACTION

3. This is an action for patent infringement arising under the patent laws of the United States, 35 U.S.C. § 271, *et seq.* arising from Defendant's acts of infringement of United States Patent Nos. 6,353,942, (the "942 patent"), 6,536,054 (the "054 patent") and 6,536,055 (the "055 patent").

THE PARTIES

4. Plaintiff MAG Aerospace is a corporation organized under the laws of Delaware having its principal place of business in Carson, California.

5. Upon information and belief, Defendant B/E Aerospace is a corporation organized under the laws of Delaware with its principal place of

business in Wellington, Florida, and having places of business in Anaheim, California, Corona, California and Carson, California.

FACTUAL BACKGROUND

The Asserted Patents

6. On March 12, 2002, the United States Patent and Trademark Office issued United States Patent No. 6,353,942, entitled, "Modular Vacuum Toilet with Line Replaceable Units," naming Mark A. Pondelick, Jay D. Stradinger, William Bruce Anderson, Arthur J. McGowan, Jr., Douglas M. Wallace, Ian Tinkler, and Michael B. Hancock as inventors. The inventors assigned the '942 patent to Evac International OY ("Evac"). A copy of the '942 patent is attached as Exhibit A.

7. On March 25, 2003, the Patent Office issued U.S. Patent No. 6,536,054, entitled, "Vacuum Toilet Bowl Assembly Having Removable Bowl." The listed inventors, all of whom are also listed as inventors for the '942 patent, assigned the '054 patent to Evac. A copy of the '054 patent is attached as Exhibit B.

8. On March 25, 2003, the Patent Office issued U.S. Patent No. 6,536,055, entitled, "Modular Vacuum Toilet with Line Replaceable Units." The listed inventors, all of whom are also listed as inventors for the '942 and '054 patents, assigned the '055 patent to Evac. A copy of the '055 patent is attached as Exhibit C.

9. On September 23, 2009, Evac assigned all rights to the '942, '054, and '055 patents (collectively, "the asserted patents") to MAG Aerospace. MAG Aerospace owned the asserted patents throughout the period of Defendant's infringing acts and still owns these patents.

10. The asserted patents relate to vacuum toilet bowl assemblies and methods for servicing said toilet bowls for use in aircraft, vehicle, and other environments. The vacuum toilet bowl assemblies include modular components such as waste receptacles, discharge valves, rinse fluid valves, and flush control

units, which facilitate the service and repair of the toilet bowls. These components, individually or in combination with other components, may comprise a line replaceable unit ("LRU").

Defendant's Knowledge of Asserted Patents

11. Defendant had actual knowledge of the asserted patents as early as 2010 because, among other things, Mark Pondelick, who is listed as an inventor on each of the asserted patents, is currently a Vice President and General Manager of Defendant and has been an employee of Defendant since at least 2010.

12. Defendant is also listed as the assignee of U.S. Patent No. US D619,228, filed on October 3, 2008 and issued on July 6, 2010, which identifies the '054 patent as a reference.

13. Additionally, Defendant is also listed as the assignee of U.S. Patent No. D618,775, filed on September 21, 2009 and issued on June 29, 2010, which identifies the '054 patent as a reference.

14. Further, Defendant has knowledge of the asserted patents through service of process or other knowledge of this lawsuit.

Defendant's Acts of Infringement

15. Defendant B/E Aerospace directly infringes the asserted patents by manufacturing, using, offering for sale, selling, and/or importing into the United States vacuum toilet bowl products and processes which embody at least one of the claims of the asserted patents.

16. Defendant B/E Aerospace indirectly infringes the asserted patents by contributory infringement by selling or offering to sell vacuum toilets for aircraft applications and methods for servicing said toilets, and which practice at least one of the claims of the asserted patents. One of B/E Aerospace's advertisements illustrates a B/E Aerospace Vacuum Toilet which includes a supporting frame, removable waste receptacle which can be inserted through the frame, rinse fluid value, flush control unit, and discharge valve. The advertisements illustrate the

presence of LRUs, including, but not limited to, a rinse fluid valve, discharge valve, flush control unit, and waste receptacle. The advertised toilet indicates that these LRUs "[c]an be replaced during a 15-minute turnaround." Defendant advertises that these toilets require "Less Maintenance," and that the modular design "allows for on-aircraft repairs." This simplified maintenance is achieved, in part, by "incorporating advanced composite materials into a modular design…" B/E Aerospace also advertises that its vacuum waste system "solves the leading removal causes found in existing systems including fouled solenoids, troublesome Teflon® coatings, and faulty mechanical switches." Given the particularized nature of the advertised systems, the B/E Aerospace toilets do not constitute staple articles or commodities of commerce suitable for substantial non-infringing uses. Defendant's prior knowledge of the asserted patents, advertisements, and lack of non-infringing uses for the B/E Aerospace vacuum waste systems, including methods for servicing these systems, demonstrate that Defendant knew that its advertised vacuum toilets and methods for servicing said toilets were especially made or adapted for use in infringement of the asserted patents.

17. Defendant B/E Aerospace also indirectly infringes the asserted patents by inducing others' performance of servicing or other methods or processes that practice at least one of the claims of the asserted patents. Specifically, Defendant advertises for sale vacuum toilets for use in aircraft applications, and touts the ease in maintaining these toilets. One of these advertisements contains an illustration of a B/E Aerospace Vacuum Toilet which includes a supporting frame, removable waste receptacle which can be inserted through the frame, rinse fluid value, flush control unit, and discharge valve. The advertisements demonstrate the presence of LRUs, including, but not limited to, a rinse fluid valve, discharge valve, flush control unit, and waste receptacle. The advertised toilet indicates that these LRUs "[c]an be replaced during a 15-minute turnaround." Defendant advertises that these toilets require "Less Maintenance," and that the modular design "allows for on-

aircraft repairs." This simplified maintenance is achieved, in part, by "incorporating advanced composite materials into a modular design…" B/E Aerospace also advertises that its vacuum waste system "solves the leading removal causes found in existing systems including fouled solenoids, troublesome Teflon® coatings, and faulty mechanical switches." These representations, combined with B/E Aerospace's prior knowledge of the asserted patents, demonstrates that Defendant intended to induce its customers to practice the methods of invention described in the asserted patents.

COUNT I

INFRINGEMENT OF U.S. PATENT NO. 6,353,942

18. Plaintiff re-alleges and incorporates by reference the allegations of paragraphs 1-18 above as if set forth fully herein.

19. Upon information and belief, Defendant B/E Aerospace directly infringes the '942 patent by making, using, selling, offering for sale, and/or importing into the United States the methods of the invention described in the '942 patent, either literally or under the doctrine of equivalents, through the servicing of products, including, but not limited to, Defendant's B/E Aerospace Vacuum Toilet.

20. Upon information and belief, Defendant B/E Aerospace has actively induced and continues to induce others to infringe the '942 patent by promoting, advertising, assisting, and/or instructing others on the performance of the claims described in the '942 patent, including the removal and replacement of faulty LRUs from toilets, with knowledge of the '942 patent and with actual knowledge and/or or willful blindness that the induced conduct infringes the '942 patent.

21. Upon information and belief, Defendant B/E Aerospace has indirectly infringed and continues to indirectly infringe the '942 patent by contributory infringement by providing non-staple articles of commerce to others, with knowledge of the '942 patent and knowledge that these non-staple articles of

commerce are especially made or adapted for use in the infringement of the methods of invention described in the '942 patent.

22. Defendant B/E Aerospace's actions constitute infringement under 35 U.S.C. § 271.

23. Plaintiff has suffered and continues to suffer monetary damages and other injuries as a result of Defendant's past and continuing infringement, inducement of infringement, and/or contributory infringement in an amount to be proven at trial.

24. Plaintiff has been and continues to be irreparably injured by Defendant's past and continuing infringement, inducement of infringement, and/or contributory infringement of the '942 patent, and Defendant's infringing activities will continue unless enjoined by this Court pursuant to 35 U.S.C § 283.

25. Defendant's infringement, inducement of infringement, and/or contributory infringement of the '942 patent have been and continue to be willful and deliberate, and Plaintiff is entitled to recover enhanced damages pursuant to 35 U.S.C. § 284 and attorney's fees and other expenses of litigation pursuant to 35 U.S.C. § 285.

COUNT II

INFRINGEMENT OF U.S. PATENT NO. 6,536,054

26. Plaintiff re-alleges and incorporates by reference the allegations of paragraphs 1-18 above as if set forth fully herein.

27. Upon information and belief, Defendant B/E Aerospace directly infringes the '054 patent by making, using, selling, offering for sale, and/or importing into the United States products that directly or indirectly infringe, either literally or under the doctrine of equivalents, one or more claims of the '054 patent. Such products include, but are not limited to, the B/E Aerospace Vacuum Toilet.

28. Upon information and belief, Defendant B/E Aerospace has actively induced others and continues to induce others to infringe the '054 patent by

promoting, advertising, assisting, and instructing others on the performance of the claims described in the '054 patent, with knowledge of the '054 patent and with actual knowledge and/or or willful blindness that the induced conduct infringes the '054 patent.

29. Upon information and belief, Defendant B/E Aerospace has indirectly infringed and continues to indirectly infringe the '054 patent by contributory infringement by providing non-staple articles of commerce to others, with knowledge of the '054 patent and knowledge that these non-staple articles of commerce are especially made or adapted for use in the infringement of the claimed inventions of the '054 patent.

30. Defendant B/E Aerospace's actions constitute infringement under 35 U.S.C. § 271.

31. Plaintiff has suffered and continues to suffer monetary damages and other injuries as a result of Defendant's past and continuing infringement, inducement of infringement, and/or contributory infringement in an amount to be proven at trial.

32. Plaintiff has been and continues to be irreparably injured by Defendant's past and continuing infringement, inducement of infringement, and/or contributory infringement of the '054 patent, and Defendant's infringing activities will continue unless enjoined by this Court pursuant to 35 U.S.C § 283.

33. Defendant's infringement, inducement of infringement, and/or contributory infringement of the '054 patent have been and continue to be willful and deliberate, and Plaintiff is entitled to recover enhanced damages pursuant to 35 U.S.C. § 284 and attorney's fees and other expenses of litigation pursuant to 35 U.S.C. § 285.

COUNT III

INFRINGEMENT OF U.S. PATENT NO. 6,536,055

34. Plaintiff re-alleges and incorporates by reference the allegations of paragraphs 1-18 above as if set forth fully herein.

35. Upon information and belief, Defendant B/E Aerospace directly infringes the '055 patent by making, using, selling, offering for sale, and/or importing into the United States the methods of the invention described in the '055 patent, either literally or under the doctrine of equivalents through the servicing of products, including, but not limited to, Defendant's B/E Aerospace Vacuum Toilet.

36. Upon information and belief, Defendant B/E Aerospace has actively induced and continues to induce others to infringe the '055 patent by promoting, advertising, assisting, and instructing others on the performance of the methods of the invention described in the '055 patent, including replacing a first LRU including a waste receptacle supported by a support structure and replacing a second LRU including at least two of a discharge valve, rinse fluid valve, and/or flush control unit independently of the vacuum toilet, with knowledge of the '055 patent and with actual knowledge and/or or willful blindness that the induced conduct infringes the '055 patent.

37. Upon information and belief, Defendant B/E Aerospace has indirectly infringed and continues to indirectly infringe the '055 patent by contributory infringement by providing non-staple articles of commerce to others, with knowledge of the '055 patent and knowledge that these non-staple articles of commerce are especially made or adapted for use to infringe the methods of invention described in the '055 patent.

38. Defendant B/E Aerospace's actions constitute infringement under 35 U.S.C. § 271.

39. Plaintiff has suffered and continues to suffer monetary damages and other injuries as a result of Defendant's past and continuing infringement,

inducement of infringement, and/or contributory infringement in an amount to be proven at trial.

40. Plaintiff has been and continues to be irreparably injured by Defendant's past and continuing infringement, inducement of infringement, and/or contributory infringement of the '055 patent, and Defendant's infringing activities will continue unless enjoined by this Court pursuant to 35 U.S.C. § 283.

41. Defendant's infringement, inducement of infringement, and/or contributory infringement of the '055 patent have been and continue to be willful and deliberate, and Plaintiff is entitled to recover enhanced damages pursuant to 35 U.S.C. § 284 and attorney's fees and other expenses of litigation pursuant to 35 U.S.C. § 285.

PRAYER FOR RELIEF

Wherefore, Plaintiff respectfully requests that the Court:

a. Enter judgment in favor of Plaintiff and against Defendant;

b. Award Plaintiff its actual damages, together with prejudgment interest and costs, as a result of Defendant's infringing activities;

c. Enjoin Defendant from continuing to infringe, induce infringement, or contribute to infringement of the '942, '054, and '055 patents;

d. Enhance by three times the damages awarded to Plaintiff as a result of Defendant's willful infringement of the '942, '054, and '055 patents;

e. Award Plaintiff its expenses of litigation, including reasonable attorney's fees; and

f. Award Plaintiff such other and further relief as may be just and proper.

Dated: August 19, 2013

Respectfully submitted,

KILPATRICK TOWNSEND & STOCKTON LLP

By: Erwin L. Cena

Emil W. Herich, Steven D. Moore, and
Erwin L. Cena
Attorneys for Plaintiff MAG Aerospace

DEMAND FOR JURY TRIAL

Pursuant to Federal Rule of Civil Procedure 38(b) and Local Rule 38-1, Plaintiff hereby demands a jury trial in this matter.

Dated: August 19, 2013

Respectfully submitted,

KILPATRICK TOWNSEND & STOCKTON LLP

By: Erwin L. Cena

Emil W. Herich, Steven D. Moore, and Erwin L. Cena
Attorneys for Plaintiff MAG Aerospace

4696261v1

EXHIBIT A

US006353942B1

(12) **United States Patent**
Pondelick et al.

(10) **Patent No.: US 6,353,942 B1**
(45) **Date of Patent: Mar. 12, 2002**

(54) **MODULAR VACUUM TOILET WITH LINE REPLACEABLE UNITS**

(75) Inventors: **Mark A. Pondelick**; **Jay D. Stradinger**, both of Roscoe; **William Bruce Anderson**, Rockford, all of IL (US); **Arthur J. McGowan, Jr.**, Thornton, CO (US); **Douglas M. Wallace**, Roscoe, IL (US); **Ian Tinkler**; **Michael B. Hancock**, both of Rockford, IL (US)

(73) Assignee: **Evac International OY**, Helsinki (FI)

(*) Notice: Subject to any disclaimer, the term of this patent is extended or adjusted under 35 U.S.C. 154(b) by 0 days.

(21) Appl. No.: **09/713,892**

(22) Filed: **Nov. 16, 2000**

(51) **Int. Cl.**[7] **E03D 11/00**
(52) **U.S. Cl.** **4/431**; 4/434; 4/435; 137/588; 137/595
(58) **Field of Search** 4/300, 316, 420, 4/431–435, 458; 137/588, 595

(56) **References Cited**

U.S. PATENT DOCUMENTS

3,239,849 A		3/1966	Liljendahl	4/77
3,860,973 A	*	1/1975	Uyeda et al.	4/431
3,922,730 A		12/1975	Kemper	4/10
3,995,328 A		12/1976	Carolan et al.	4/10
4,063,315 A		12/1977	Carolan et al.	4/10
4,184,506 A		1/1980	Varis et al.	137/205
4,246,925 A		1/1981	Oldfelt	137/205
4,275,470 A		6/1981	Badger et al.	4/316
4,357,719 A		11/1982	Badger et al.	4/316
4,521,925 A		6/1985	Chen et al.	4/362
4,713,847 A		12/1987	Oldfelt et al.	4/316
5,007,117 A		4/1991	Oldfelt et al.	4/432
5,133,853 A		7/1992	Mattsson et al.	210/104
5,271,105 A	*	12/1993	Tyler	4/431
5,604,938 A		2/1997	Tyler	4/321
5,732,417 A		3/1998	Pondelick	4/427
5,909,968 A	*	6/1999	Olin et al.	4/431
6,131,596 A		10/2000	Monson	137/14
6,152,160 A		11/2000	Bowden Wilcox et al.	137/15.01
6,216,285 B1		4/2001	Olin	4/431

* cited by examiner

Primary Examiner—Gregory L. Huson
Assistant Examiner—Tuan Nguyen
(74) *Attorney, Agent, or Firm*—Marshall, Gerstein, & Borun

(57) **ABSTRACT**

A modular vacuum toilet, and a method of servicing such a toilet, are disclosed. The toilet is used with a vacuum toilet system having a sewer line placeable under partial vacuum pressure and a source of rinse fluid. The modular vacuum toilet comprises a frame and a removable bowl engaging and supported be the frame, the bowl defining an outlet and having a rinse fluid dispenser associated therewith. The modular vacuum toilet also has a valve set module. The valve set module includes a discharge valve having an inlet in fluid communication with the bowl outlet, an outlet in fluid communication with the sewer line, and a movable discharge valve member disposed between the discharge valve inlet and outlet. A rinse fluid valve is also incorporated into the valve set module and has an inlet in fluid communication with the source of rinse fluid, an outlet in fluid communication with the rinse fluid dispenser, and a movable rinse fluid valve member disposed between the rinse fluid valve inlet and outlet. The valve set module further includes a flush control unit having a circuit board operably connected to the discharge valve and rinse fluid valve for controlling actuation of the discharge valve member and rinse fluid valve member.

26 Claims, 8 Drawing Sheets

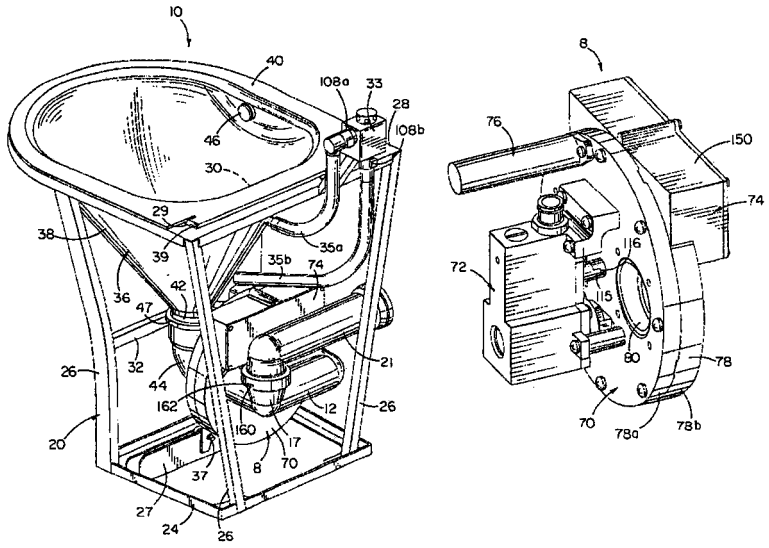

Ex. A

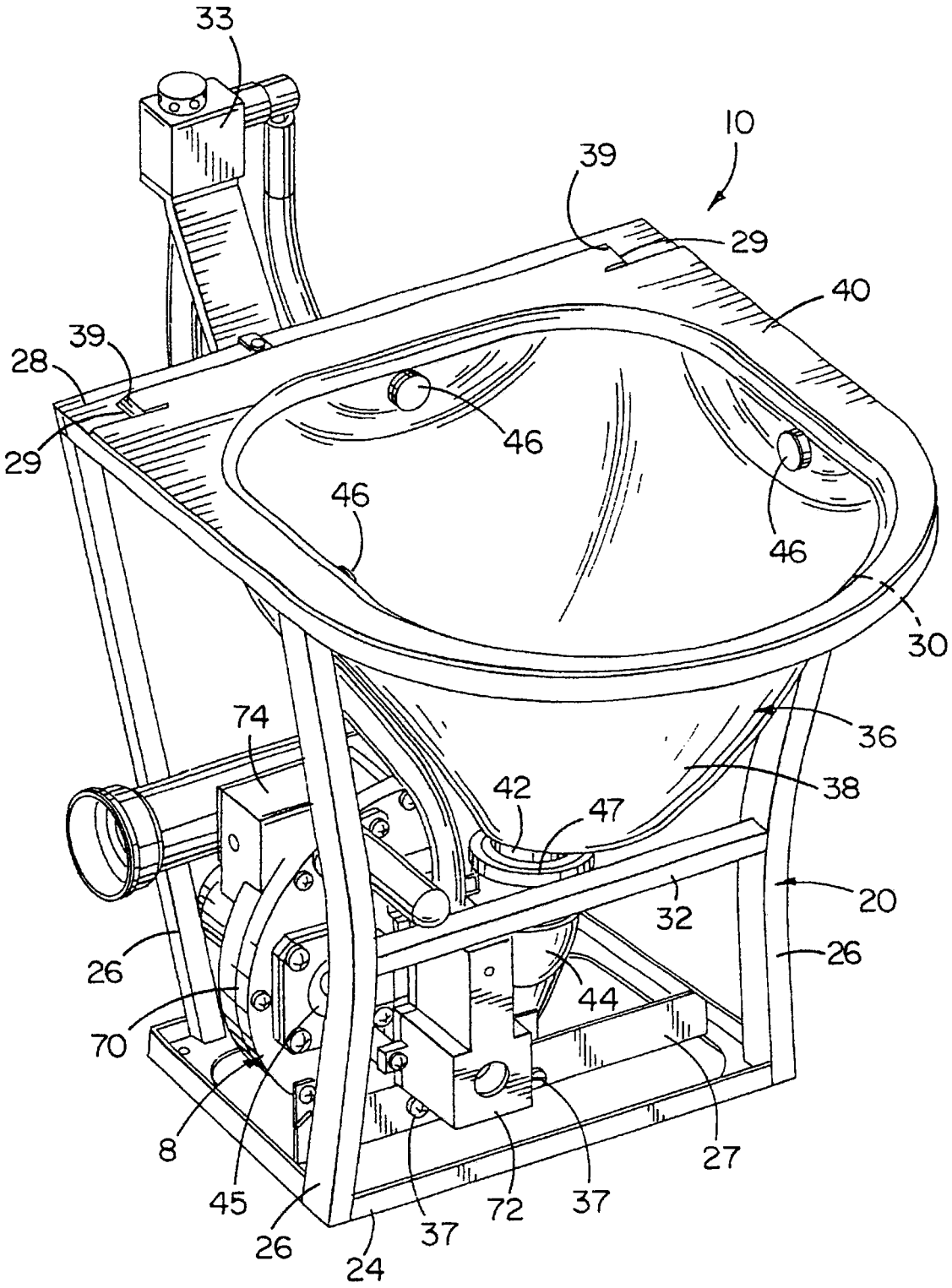
33
10
39
29
40
39
28
29
46
46
46
30
74
36
38
42
47
20
32
26
26
44
70
8
45
26
24
37
72
37
27

FIG. 1A

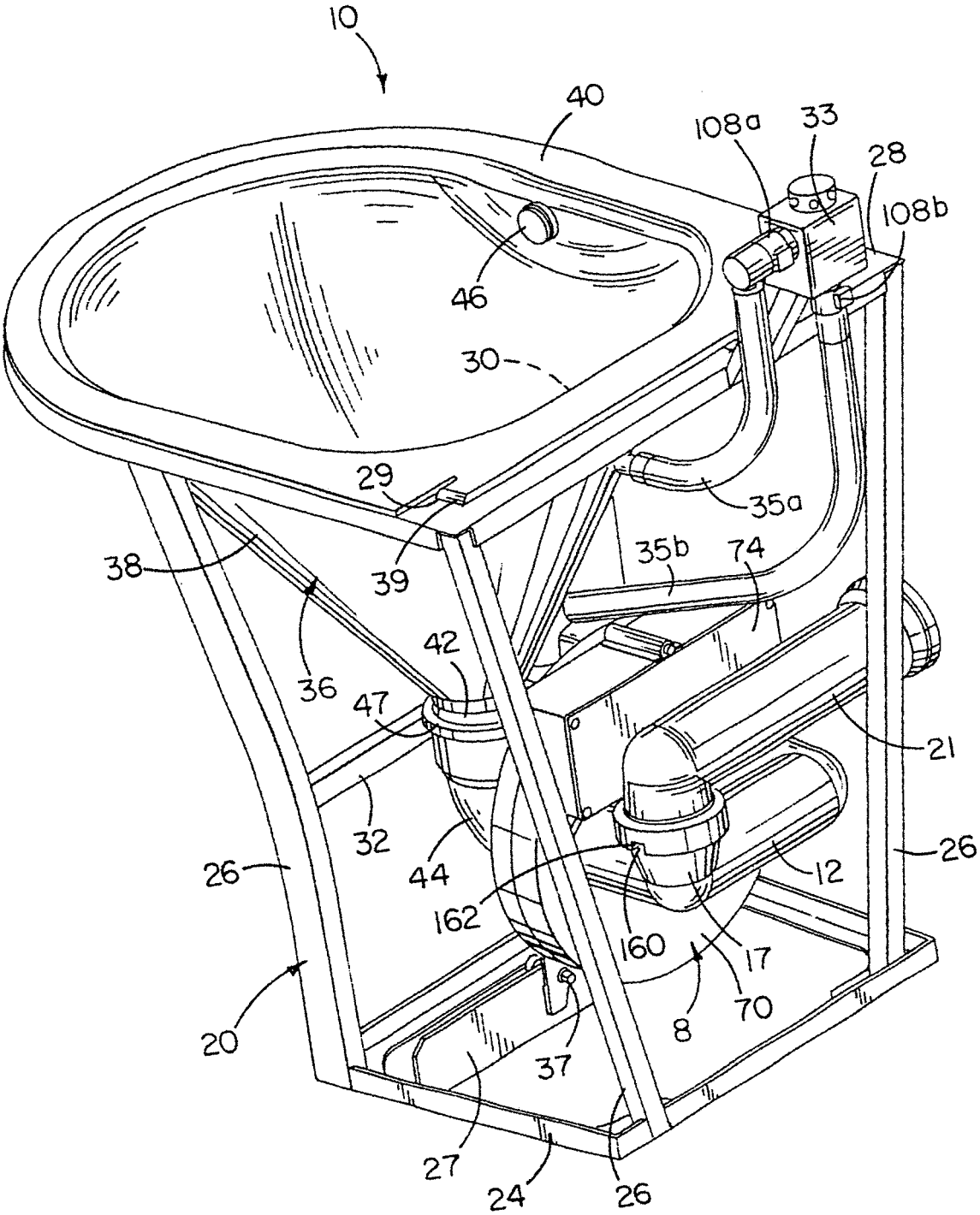
10
40
108a
33
28
108b
46
30
29
35a
38
39
35b
74
42
36
47
21
32
26
44
12
26
162
160
17
70
8
20
37
27
24
26

FIG. 1B

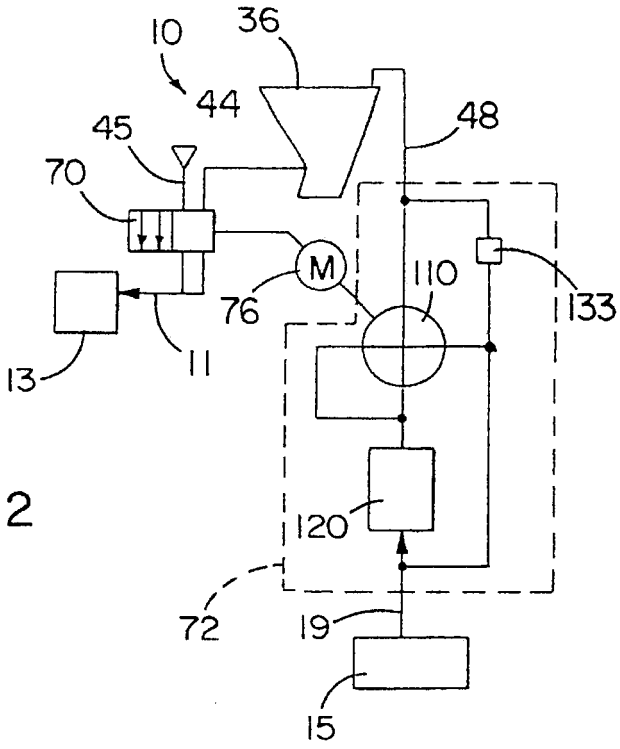

FIG. 2

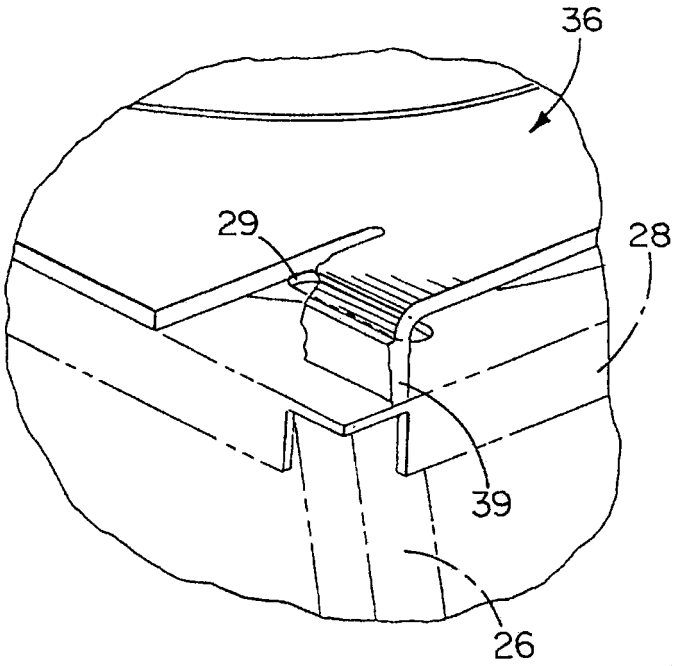

FIG. 3

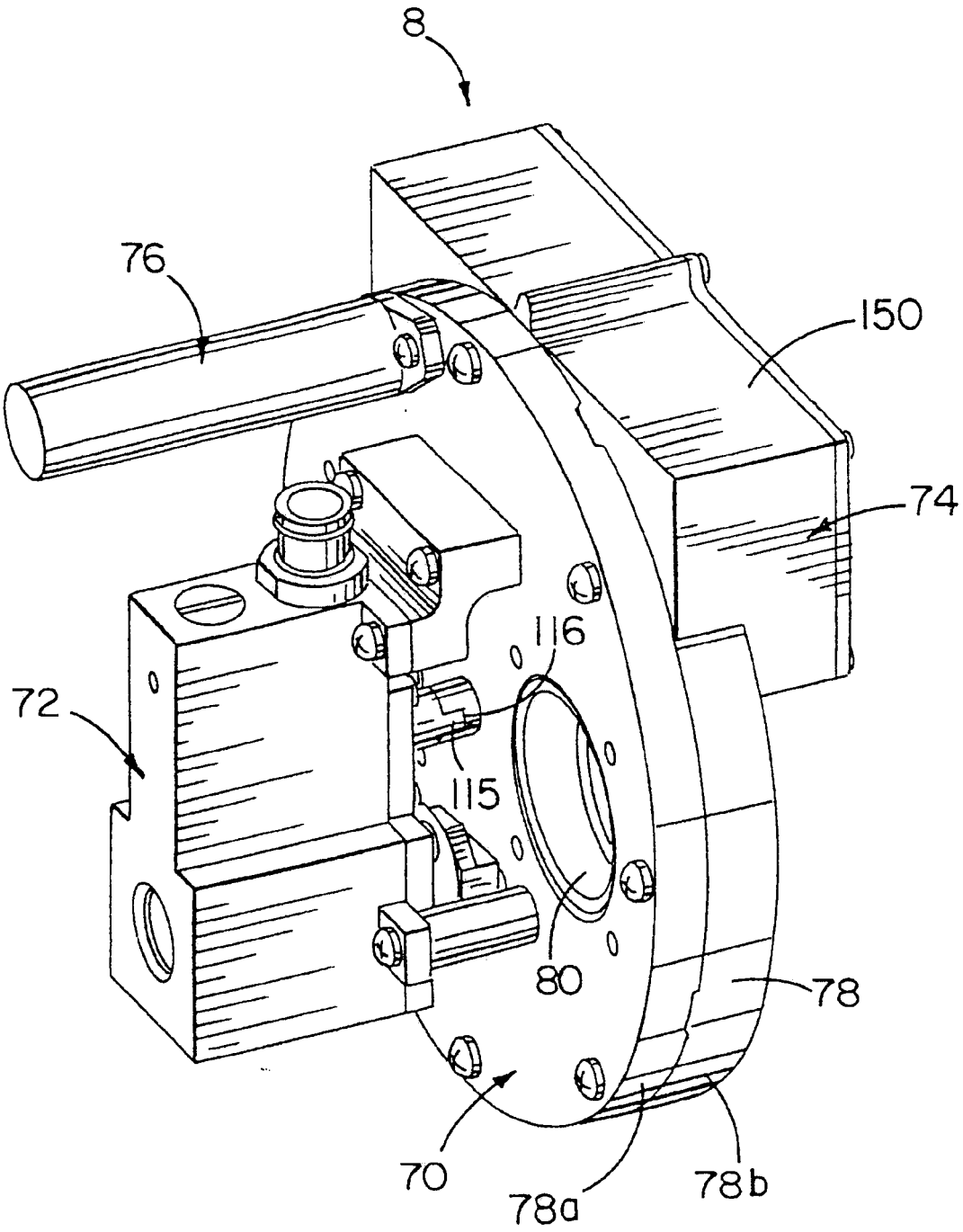

FIG. 4

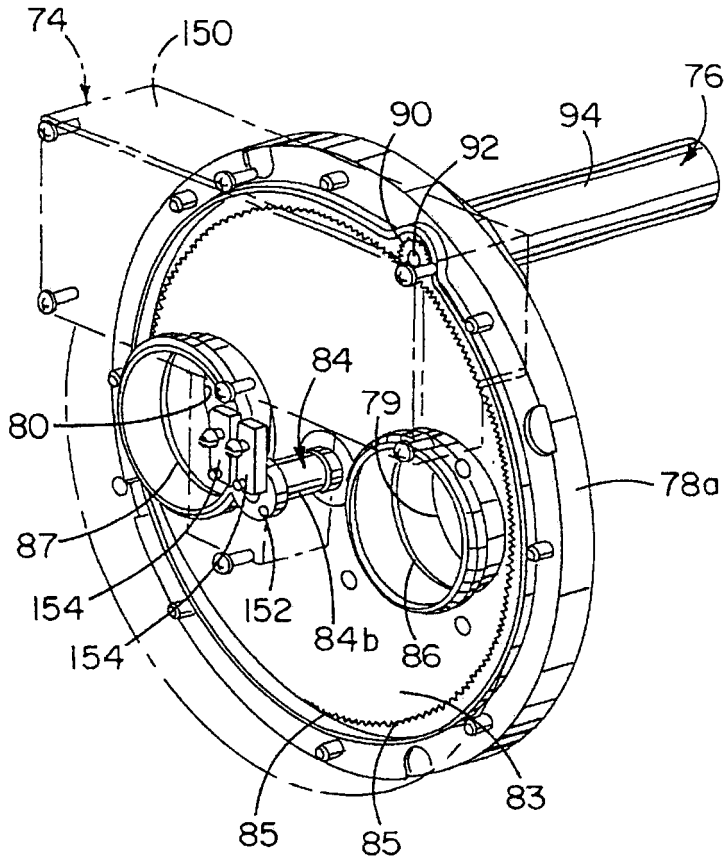
74
150
76
90
92
94
84
79
80
78a
87
154
152
84b
86
154
85
85
83

FIG. 5A

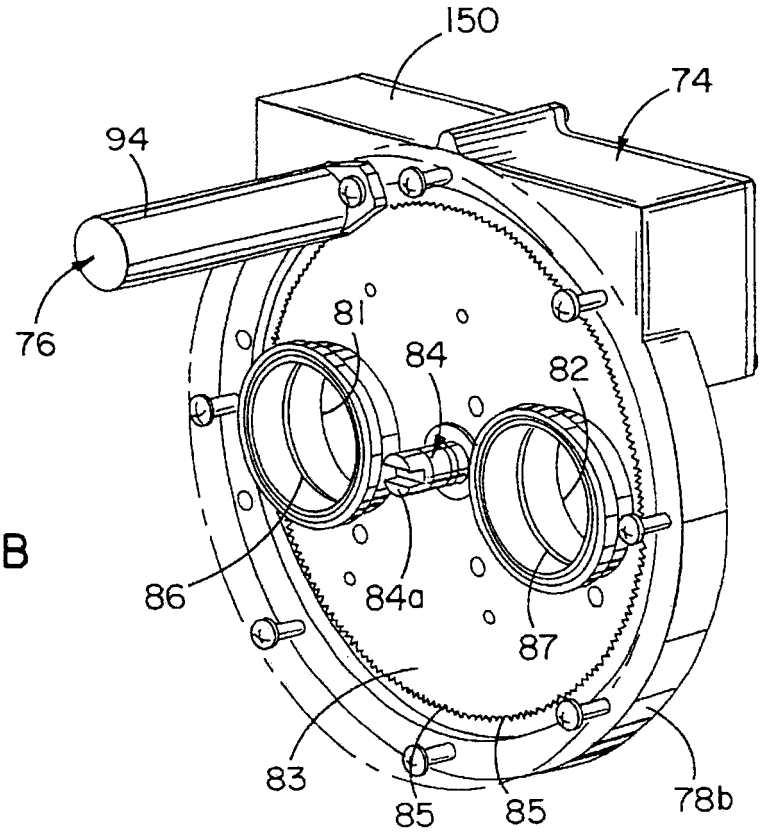
150
74
94
76
81
84
82
86
84a
87
83
85
85
78b

FIG. 5B

FIG. 6

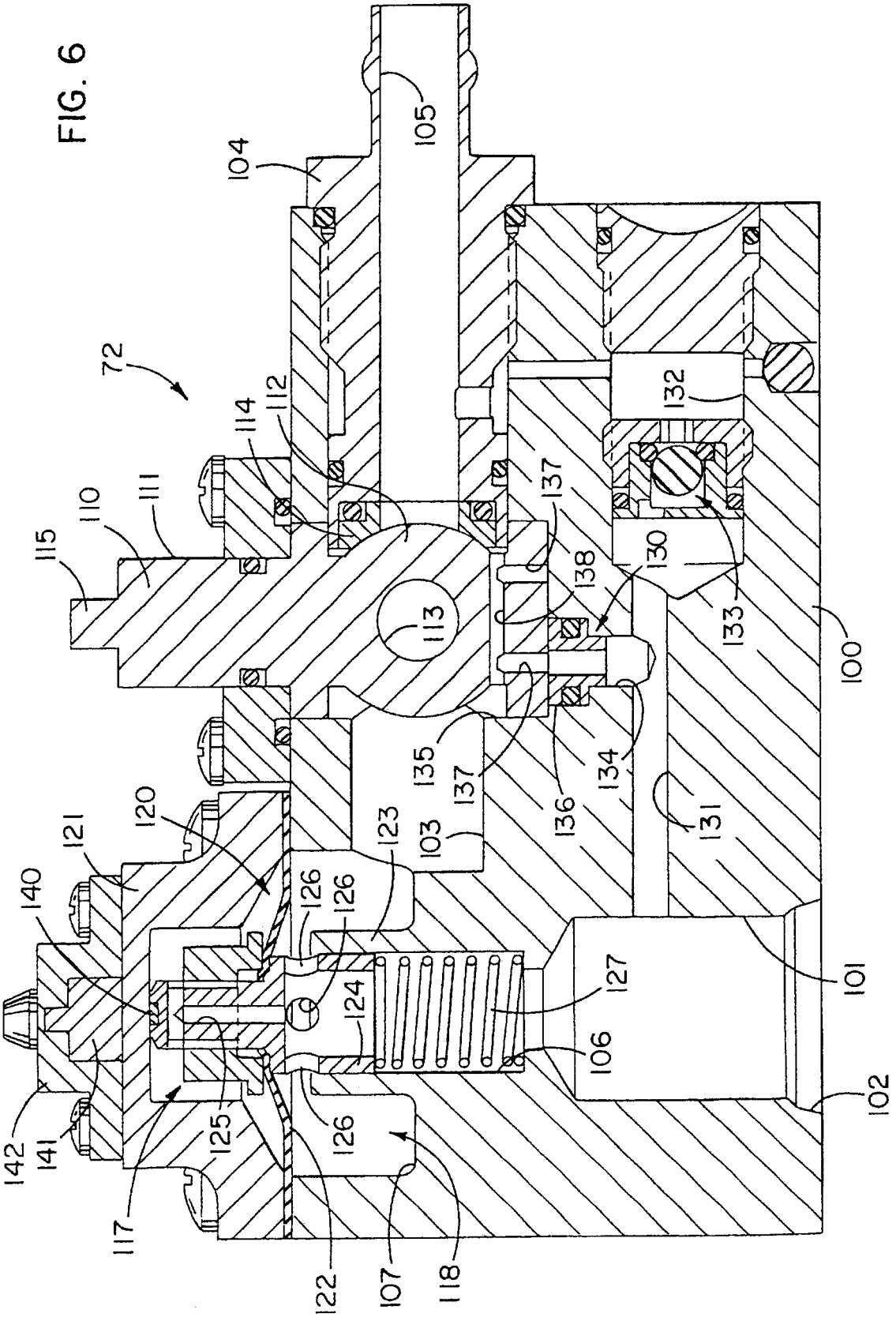
72
104
105
112
114
110
111
115
113
132
137
138
130
133
100
135
137
134
136
131
120
121
123
103
140
126
126
124
127
101
106
102
142
141
125
126
117
122
107
118

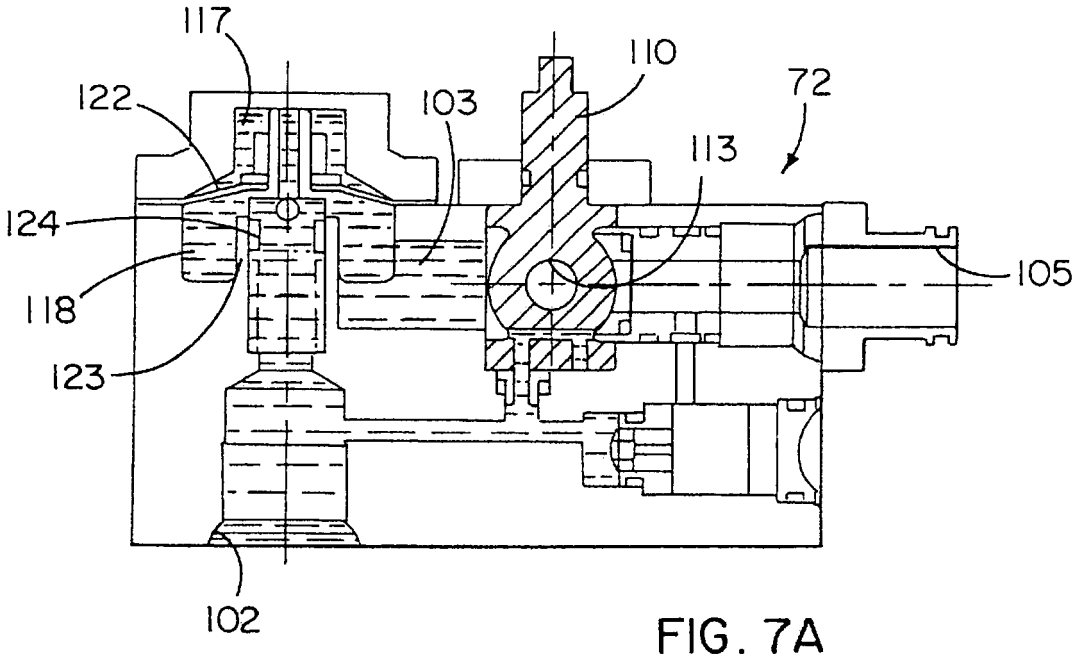
117
122
103
110
72
113
124
105
118
123
102

FIG. 7A

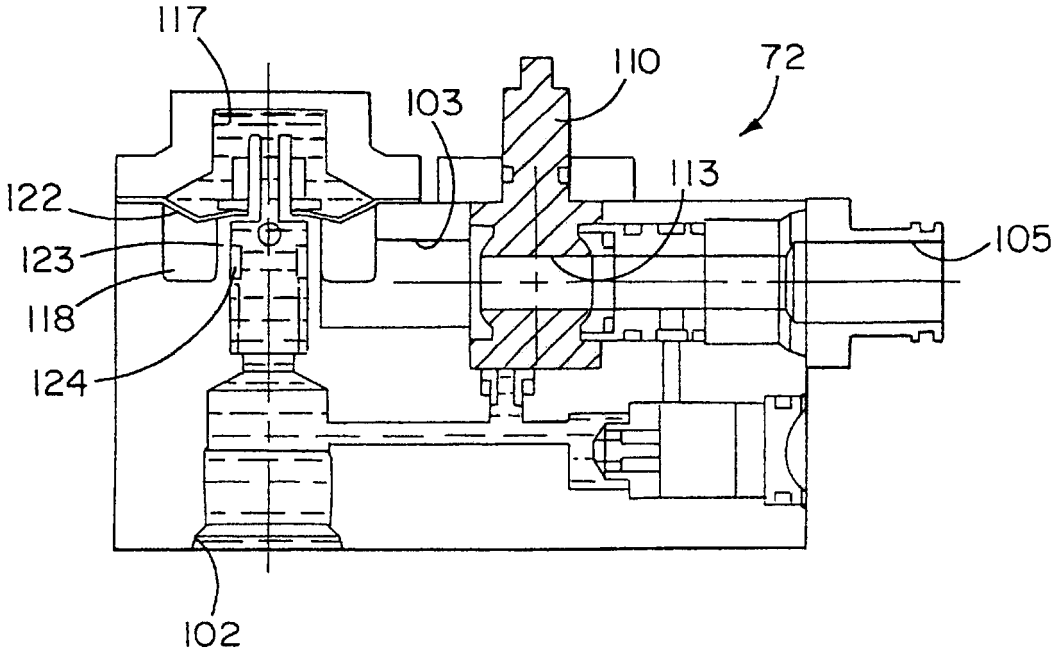
117
110
72
103
113
122
105
123
118
124
102

FIG. 7C

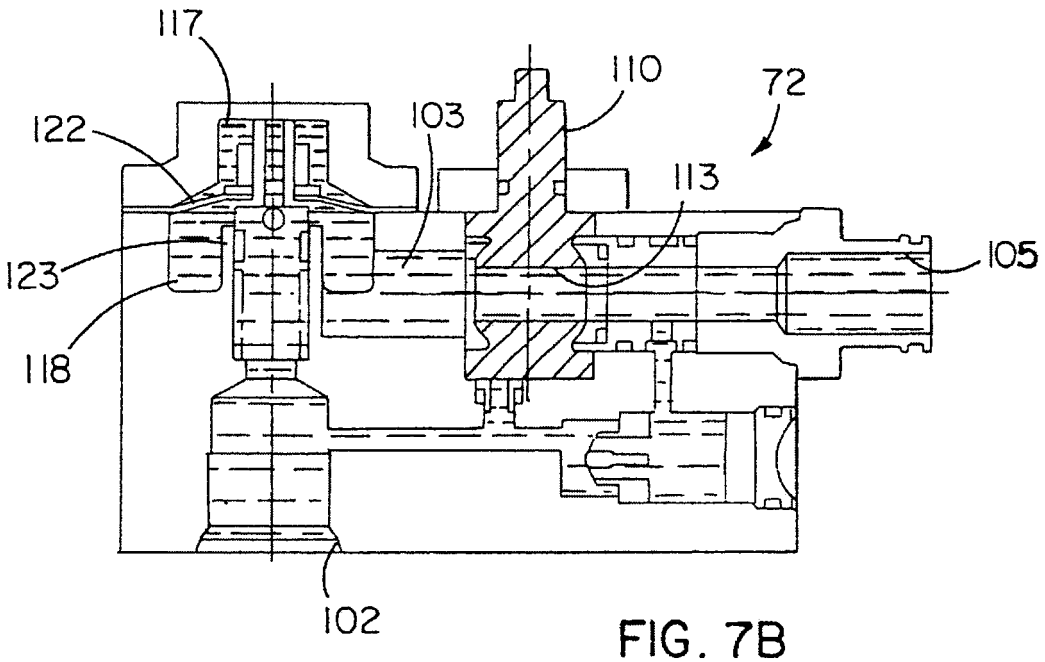
117
110
72
122
103
113
105
123
118
102

FIG. 7B

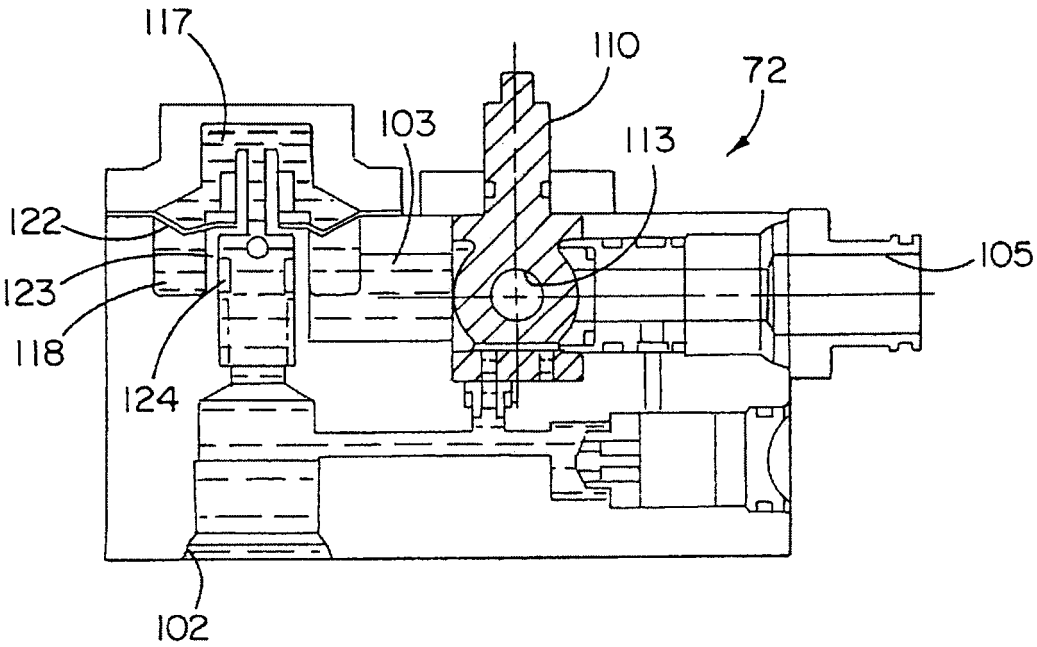
117
110
72
103
113
122
105
123
118
124
102

FIG. 7D

MODULAR VACUUM TOILET WITH LINE REPLACEABLE UNITS

FIELD OF THE INVENTION

The present invention generally relates to toilets and, more particularly, to vacuum toilet systems.

BACKGROUND OF THE INVENTION

Vacuum toilet systems are generally known in the art for use in both vehicle and stationary applications. A vacuum toilet system typically comprises a bowl for receiving waste having an outlet connected to a vacuum sewer line. A discharge valve is disposed between the bowl outlet and vacuum sewer line to selectively establish fluid communication therebetween. The vacuum sewer line is connected to a collection tank that is placed under partial vacuum pressure by a vacuum source, such as a vacuum blower. When the discharge valve is opened, material in the bowl is transported to the sewer pipe as a result of the pressure difference between the interior of the bowl and the interior of the sewer line. Conventional vacuum toilet systems also include a source of rinse fluid and a rinse fluid valve for controlling introduction of rinse fluid into the bowl.

The components of a conventional vacuum toilet are typically provided separately and are overly difficult to assemble. The discharge valve is typically mounted in a first position, while the rinse valve is mounted in a second, separate position. A flush control until (FCU) is mounted remote from both valves and provides control signals to the discharge and rinse valve actuators. Accordingly, various mounting brackets, tubing, and wires are needed to interconnect the various components, making assembly overly complicated and time-consuming.

In addition, the separate components used in conventional vacuum toilets make repair and maintenance overly time consuming and labor intensive. Maintenance concerns are particularly significant in aircraft applications, in which a number of sub-systems are installed on board. According to general practice in the airline industry, each sub-system includes one or more components which must be replaced in the event of failure, such replacement components being commonly referred to as line replaceable units (LRUs). Presently, the entire vacuum toilet is defined as the LRU for the vacuum toilet system. As a result, an airline must stock one or more replacement toilets in the event of a toilet failure, so that the replacement toilet may be swapped in for the faulty toilet. A "bench test" is then performed on the faulty toilet to determine which components have failed in the toilet. The faulty components are then repaired or replaced (which may include significant disassembly and reassembly of the toilet) so that the toilet may be reused on another aircraft.

Each of the steps performed during a toilet repair is overly difficult and time consuming. To remove an entire toilet assembly from an aircraft requires disassembly of at least four self-locking mounting fasteners, an electrical connection, a grounding strap, a potable water line connection, and a waste discharge pipe connection. Each connection may be difficult to access, and may require a particular tool in order to loosen and disconnect. The same connections must then be reconnected for the replacement toilet.

Even if it were possible to remove and replace a single toilet component, it would be overly difficult and time consuming to do so. Removal of a component would require disconnection of several wires and pipes, and the components are often located in areas which are difficult to access. Furthermore, it would be difficult to diagnose whether one component or several components had failed. There exists a multitude of combinations of simultaneous component failures, which may lead to trouble-shooting errors and the replacement or repair of non-faulty components.

In view of the foregoing, it is apparent that the replacement and repair of conventional toilets is overly time consuming, and requires an airline to maintain a large stock of replacement toilets in the event of equipment failure.

Other repairs, which may not require substantial amounts of trouble shooting to identify the failed components, still require significant amounts of disassembly and reassembly. The toilet bowl, for example, is typically formed of stainless steel covered with a non-stick coating that is subject to failure. In conventional toilets, the bowl is a structural, load bearing component that is attached to a base support. In some toilets, the base support is permanently attached to the bowl and therefore the entire toilet must be removed to replace the coating. In other toilets, the bowl is removable from the support base, and therefore fasteners must be removed and the bowl must be disconnected from the rinse fluid and discharge lines. In addition, the rinse ring or nozzle used to direct rinse fluid into the bowl must be removed. Furthermore, if the non-stick coating fails, the bowl must be removed from all of the other toilet components for a re-coating process, steps of which are performed at high temperature to remove the old coating and apply a new coating to the toilet bowl surface. Accordingly, the replacement of a conventional bowl is overly complicated and time consuming.

From the foregoing, it will be appreciated that a number of toilets must be kept in stock for replacement in the event of a faulty toilet. The number of stock toilets is further increased due to the left-handed and right-handed discharge configurations of conventional vacuum toilets. Typically, the component layout of a conventional vacuum toilet must be modified according to the type of discharge configuration desired. In addition, different components may be required, such as a toilet bowl with a left-handed or right-handed discharge. As a result, an airline must have both left- and right-handed discharge replacement toilets on hand, thereby increasing the number of stock parts required.

From the above, it will be appreciated that a need exists for a vacuum toilet that is easier to maintain and which reduces the number of stock parts required.

SUMMARY OF THE INVENTION

In accordance with certain aspects of the present invention, a modular vacuum toilet is provided for use in a vacuum toilet system having a sewer line placeable under partial vacuum pressure and a source of rinse fluid. The modular vacuum toilet comprises a support structure, and a removable bowl supported by the support structure, the bowl defining an outlet and having a rinse fluid dispenser associated therewith. A valve set module is provided having a discharge valve with an inlet in fluid communication with the bowl outlet, an outlet in fluid communication with the sewer line, and a movable discharge valve member disposed between the discharge valve inlet and outlet; a rinse fluid valve having an inlet in fluid communication with the source of rinse fluid, an outlet in fluid communication with the rinse fluid dispenser, and a movable rinse fluid valve member disposed between the rinse fluid valve inlet and outlet; and a flush control unit having a circuit board operably connected to the discharge valve and rinse fluid valve for

controlling actuation of the discharge valve member and rinse fluid valve member.

In accordance with additional aspects of the present invention, a method of servicing a vacuum toilet is provided, in which the vacuum toilet is attached to a vacuum toilet system having a sewer line placeable under partial vacuum pressure and a source of rinse fluid, and in which the vacuum toilet includes a waste receptacle defining an outlet and having a rinse fluid dispenser associated therewith. The method comprises providing a first valve set module having a discharge valve with an inlet adapted to engage the receptacle outlet and an outlet adapted for releasable connection to the sewer line, a rinse fluid valve with an inlet adapted for releasable connection to the source of rinse fluid and an outlet adapted for releasable connection to the rinse fluid dispenser, and a flush control unit adapted to control operation of the discharge valve and rinse fluid valve. The discharge valve is detached from the bowl outlet, discharge valve outlet from the sewer line, the rinse fluid valve inlet from the rinse fluid source, and the rinse fluid valve outlet from the rinse fluid line, and the valve set module is removed from the vacuum toilet. A second valve set module is inserted into the vacuum toilet, the second valve set module including a discharge valve with an inlet adapted to engage the receptacle outlet and an outlet adapted for releasable connection to the sewer line, a rinse fluid valve with an inlet adapted for releasable connection to the source of rinse fluid and an outlet adapted for releasable connection to the rinse fluid dispenser, and a flush control unit adapted to control operation of the discharge valve and rinse fluid valve. The second valve set discharge valve inlet is then attached to the bowl outlet, the discharge valve outlet to the sewer line, the rinse fluid valve inlet to the rinse fluid source, and the rinse fluid valve outlet to the rinse fluid line.

In accordance with further aspects of the present invention, a method of servicing a vacuum toilet is provided wherein the toilet has a receptacle for receiving waste defining an outlet and includes a rinse fluid dispenser associated therewith. A discharge valve has an inlet in fluid communication with the receptacle outlet, an outlet in fluid communication with a sewer line placeable under partial vacuum pressure, and a moveable discharge valve member disposed between the discharge valve inlet and the discharge valve outlet. A rinse fluid valve has an inlet in fluid communication with a source of rinse fluid, an outlet in fluid communication with the rinse fluid dispenser, and a moveable rinse fluid valve member disposed between the rinse fluid valve inlet and the rinse fluid valve outlet. A flush control unit is adapted to control actuation of the discharge valve member and rinse fluid valve member, in which at least one of the discharge valve, rinse fluid valve, flush control unit, and waste receptacle is a line replaceable unit. The method comprises removing the faulty line replaceable unit from the toilet, and installing a new line replaceable unit into the toilet.

In accordance with still further aspects of the present invention, a valve set is provided for use in a vacuum toilet system having a sewer pipe placeable under partial vacuum pressure. The valve set comprises a discharge valve having an outlet, and an outlet pipe attached to the discharge valve outlet and defining a branch. A discharge pipe has a first end adapted to releasably engage the sewer pipe and a second end releasably attachable to the branch in at least a first position corresponding to a left-handed discharge configuration and a second piston corresponding to a right-handed discharge configuration.

Other features and advantages are inherent in the apparatus claimed and disclosed or will become apparent to those skilled in the art from the following detailed description and its accompanying drawings.

BRIEF DESCRIPTION OF THE DRAWINGS

FIGS. **1A** and **1B** are front and rear perspective views, respectively, of a modular vacuum toilet in accordance with the present invention.

FIG. **2** is a schematic diagram of the vacuum toilet of FIG. **1**.

FIG. **3** is an enlarged view of a tab used to secure a bowl to the frame.

FIG. **4** is an enlarged perspective view of the valve set incorporated into the vacuum toilet of FIG. **1**.

FIGS. **5A** and **5B** are perspective views of a discharge valve and actuator incorporated into the valve set.

FIG. **6** is a side elevation view, in cross-section, of a rinse valve assembly incorporated into the valve set.

FIGS. **7A–D** are side elevation views, in cross-section, of the rinse valve assembly showing the various stages of a rinse cycle.

DETAILED DESCRIPTION OF THE PREFERRED EMBODIMENTS

Referring initially to FIGS. **1A**, **1B**, and **2**, a modular vacuum toilet suitable for use in a vehicle, in accordance with the present invention, is generally referred to with reference numeral **10**. The modular vacuum toilet **10** generally includes a valve set **8**, a frame **20**, and a bowl **36**. The vehicle is provided with a sewer line **11**, a vacuum tank **13** connected to the sewer line **11**, and a vacuum source (not shown) for placing the vacuum tank **13** under partial vacuum pressure. The vehicle further includes a source of rinse fluid **15** connected to a rinse fluid supply line **19**.

The frame **20** is provided for supporting the components of the vacuum toilet **10**. As best shown with reference to FIGS. **1A** and **1B**, the frame **20** includes a bottom member **24** adapted for attachment to a support surface of the vehicle. Vertical supports **26** extend upwardly from the bottom member **24**, and a top member **28** is attached to the vertical supports **26**. The top member **28** is formed with an opening **30** near the front and two slots **29** near the rear thereof. In the illustrated embodiment, an intermediate support **32** is attached between adjacent vertical supports **26**, and a bracket **27** is attached to the bottom member **24**. The bottom member **24**, top member **28**, and bracket **27** are preferably formed of sheet metal, while the vertical supports **26** and intermediate support **32** are preferably formed of tube steel, both of which are readily available and inexpensive. Other materials having sufficient rigidity, however, may also be used.

The bowl **36** is provided for receiving waste material. The bowl **36** has a curved sidewall **38** and an out-turned flange **40** extending about an upper edge of the sidewall (FIGS. **1A** and **1B**). The out-turned flange **40** further includes tabs **39** sized for insertion through the slots **29** formed in the frame top member **28**, as best shown in FIG. **3**. A bottom of sidewall is formed in an outlet **42**, and the sidewall **38** is sized for insertion into the opening **30** of the frame top member **28**. The outlet **42** fluidly communicates with a discharge valve **70** through a transfer pipe **44**. The transfer pipe **44** preferably includes a collar **47** sized to frictionally engage and seal with the outlet **42**.

To attach the bowl **36** to the frame **20**, the bowl **36** is inserted through the opening **30** and positioned so that the tabs **39** are aligned with the slots **29** and the outlet **42** is

aligned with the collar **47**. The bowl **36** is lowered so that the tabs **39** pass through and lock with the slots **29**. Simultaneously, the outlet **42** is inserted into and engages the collar **47**. In this position, the out-turned flange **40** closely overlies the frame top member **28** so that the downward forces applied to the bowl **36** are transferred to the frame **20**. As a result, the bowl **36** is not a load-bearing component, and may be made of non-structural materials such as plastic, thin-walled metal (defined herein as less than approximately 0.040" thick), or other known alternatives. In addition, the bowl **36** is separable from the frame **20** and therefore may be replaced independently from the rest of the toilet **10**. Still further, the tabs **39** may be manipulated manually, and therefore no tools are required to install or remove the bowl **36**.

At least one rinse fluid dispenser, such as nozzles **46**, is provided inside the bowl **36** for directing rinse fluid over the surface of the bowl. As best shown in FIGS. **1A** and **1B**, a plurality of nozzles **46** are spaced about the bowl sidewall **38** and are oriented to direct rinse fluid over portions of the bowl surface. The number of nozzles may be more or less than that shown, depending on the size of the bowl surface to be rinsed. As used herein, the phrase "rinse fluid dispenser" includes the illustrated nozzles **46**, as well as known substitutes, such as spray rings.

A vacuum breaker **33** is positioned above the top edge of the bowl **36**, and a first rinse fluid pipe **35***a* extends from the nozzles **46** to the vacuum breaker **33**. A second rinse fluid pipe **35***b* extends from the vacuum breaker **33** to a rinse valve **72**. Quick-disconnect couplings **108***a*, **108***b* are provided to connect the first and second rinse fluid pipes **35***a*, **35***b* to the vacuum breaker **33**.

The separate frame **20** advantageously allows the bowl **36** to be a line replaceable unit (LRU). When the bowl **36** becomes worn or otherwise needs replacement, maintenance person may simply disconnect the first rinse fluid pipe **35***a* using the quick disconnect coupling **108***a*, manipulate the tabs **39** so that the are disengaged from the slots **29**, and pull upward on the bowl **36** to remove the bowl **36** from the frame **20**. A new bowl **36** may then be inserted into the frame **20** as described above, and the first rinse fluid pipe **35***a* may be connected to the vacuum breaker **33** using the quick-disconnect coupling **108***a*. As a result, the entire toilet need not be removed and serviced. In addition to facilitating bowl removal and replacement, the frame **20** allows a wider range of materials to be used for the bowl **36**, since the frame **20**, rather than the bowl **36**, supports the load.

As best shown in FIG. **1A**, the valve set **8** is mounted to the frame bracket **27**. The valve set **8** is preferably attached to the bracket **27** using fasteners that may be manipulated by hand, such as knurled screws **37**. The valve set **8** includes four sub-components: a discharge valve **70**, a rinse valve **72**, a flush control unit (FCU) **74**, and an actuator **76** (FIG. **4**). The discharge valve **70** includes a discharge valve housing **78** divided into two halves **78***a*, **78***b*. As best shown in FIGS. **5A** and **5B**, the housing **78** includes a pair of inlets **79**, **80** formed in the housing half **78***a* aligned with a pair of outlets **81**, **82** formed in the housing half **78***b*.

The housing **78** further defines a chamber for receiving a discharge valve member, such as valve disk **83**. An axle **84** is attached to the valve disk **83** and has two ends **84***a*, **84***b*. Holes are formed in the housing halves **78***a*, **78***b* sized to receive the axle ends **84***a*, **84***b*, respectively, so that the disk **83** is supported for rotation about the axle **84**. The periphery of the disk **83** is formed with gear teeth **85**, and a pair of apertures **86**, **87** are formed through the disk **83**. The apertures **86**, **87** are spaced so that both register simultaneously with the associated inlet/outlet pairs **79/81**, **80/82** as the disk **83** rotates. In the illustrated embodiment, the apertures **86**, **87** and associated inlet/outlet pairs **79/81**, **80/82** are spaced 180 degrees apart.

According to the illustrated embodiment, the inlet **79** is connected to one end of the transfer pipe **44**, with the other end of the transfer pipe **44** being attached to the bowl outlet **42**. An air intake check valve **45** is attached to the other inlet **80**, and is oriented to allow fluid to flow into the inlet **80** while preventing fluid from discharging out of the check valve **45** (FIGS. **1A** and **2**). A U-shaped outlet pipe **12** (FIG. **1B**) has a first end connected to the outlet **81** and a second end connected to the outlet **82**. The outlet pipe **12** further has a branch **17** leading to a discharge pipe **21**.

In accordance with certain aspects of the present invention, the branch **17** and discharge pipe **21** are adapted to provide both right- and left-handed discharge configurations. As best shown in FIG. **1B**, the branch **17** includes a pair of spaced pins **160** (only one shown in FIG. **1B**) and the discharge pipe **21** a pair of spaced J-shaped slots **162** (only one shown in FIG. **1B**) positioned to engage the pins, so that the discharge pipe **21** is removably attached to the branch **17**. The pins **160** and J-shaped slots **162** are preferably spaced 180 degrees apart, so that the discharge pipe **21** may be positioned for either right- or left-handed discharge simply by rotating the discharge pipe **21** before attachment, without requiring changes to the other toilet components. The free end of the discharge pipe **21** is adapted for releasable connection to the sewer line **11**, such as with a clam shell coupling (not shown).

In operation, when the disk apertures **86**, **87** are aligned with the inlet/outlet pairs **79/81**, **80/82**, the discharge valve **70** not only transfers waste from the transfer pipe **44** to the sewer line **11**, but also pulls additional air into the sewer line **11** through the air intake check valve **45**. The additional air intake reduces noise that is normally generated during a flush.

The actuator **76** is provided for driving the valve disk **83**. As best shown in FIG. **5A**, the actuator **76** includes a spur gear **90** enmeshed with the gear teeth **85** formed about the periphery of the disk **83**. The spur gear **90** is mounted to a rotatable shaft **92**, and a drive is provided for rotating the shaft **92**. The FCU **74** is operably coupled to the actuator **76** to control operation of the actuator. According to the illustrated embodiment, the disk **83** may be rotated in a single direction by ninety degree increments to open and close the discharge valve **70**. Alternatively, the disk **83** may also be reciprocated back and forth across a ninety degree arc to open and close the valve **70**, or the disk **83** may be controlled in other manners according to other disk designs and layouts.

The rinse valve **72** is provided for controlling flow of rinse fluid to the bowl **36**. As best shown in FIG. **6**, the rinse valve **72** comprises a housing block **100** formed with an inlet bore **101**, defining an inlet **102**, and an outlet bore **103**. The inlet bore **102** is adapted for connection to the rinse fluid line **19** via a quick-disconnect coupling (not shown). An insert **104** is positioned in a downstream portion of the outlet bore **103** and defines an outlet **105**. The outlet end of the insert **104** is barbed to secure one end of the second rinse fluid pipe **35***b* thereto, while the opposite end of the second rinse fluid pipe **35***b* has the quick-disconnect coupling **108***b* (FIGS. **1A** and **1B**). A poppet valve bore **106** is also formed in the housing block **100**, and fluidly communicates with the inlet bore **101**. An annular recess **107** is formed in the housing block **100**

concentric with the poppet valve bore **106** to establish fluid communication between the poppet valve bore **106** and the outlet bore **103**.

The rinse valve **72** includes a rinse valve member, such as a ball valve **110**, which is disposed in the outlet bore **103** for selectively establishing fluid communication between the outlet bore **103** and the outlet **105**. The ball valve **110** includes a shaft **111** and a valve member **112** having a flow passage **113** extending therethrough. A seal **114** is provided downstream of the valve member **112** for preventing leakage between the valve member **112** and the downstream portion of the outlet bore **103**. As shown in FIG. **6**, the flow passage **113** is perpendicular to the outlet bore **103**, thereby preventing fluid flow. The ball valve **110** is rotatable, however, to align the flow passage **113** with the outlet bore **103**, thereby establishing fluid communication between the upstream portion of the outlet bore **103** and outlet **105**.

In the preferred embodiment, the top of the shaft **111** is adapted to mechanically engage the axle end **84***a*, as best shown in FIG. **4**, so that rotation of the disk **83** also rotates the ball valve **110**. In the illustrated embodiment, the shaft **111** is formed with a key **115**, while the axle end **84***a* has a slot **116** sized to receive the key **115**. As a result, a separate actuator is not required to actuate the ball valve **110**, thereby reducing cost and space requirements for the toilet.

The rinse valve **72** further includes a fuse valve **120** for metering rinse fluid flow through the rinse valve when the ball valve **110** is open. As used herein, the phrase "fuse valve" indicates a valve that actuates after a set value of fluid has passed therethrough. As best shown in FIG. **6**, a bonnet **121** is attached to the housing block **100** to close off the poppet valve bore **106** and the recess **107**. A flexible diaphragm **122** is attached between the housing block **100** and the bonnet **121** to define a pilot chamber **117** above the diaphragm **122** and a flow chamber **118** below the diaphragm **122**. As illustrated at FIG. **6**, the diaphragm **122** is in a closed position, in which the diaphragm **122** engages an annular intermediate wall **123** extending between the poppet valve bore **106** and recess **107**, thereby closing off fluid communication between the poppet valve bore **106** and recess **107**. A poppet valve **124** is disposed inside the poppet valve bore **106** and is attached to the diaphragm **122**, so that the poppet valve **124** moves with the diaphragm **122**. The top of the poppet valve **124** is formed with a pilot port **125**, and flow ports **126** extend radially through a sidewall of the poppet valve **124**. A spring **127** is disposed in the poppet valve port for biasing the diaphragm **122** away from the intermediate wall **123** toward an open position, in which fluid communication is established between the poppet valve bore **106** and the recess **107**.

The fuse valve **120** limits the amount of rinse fluid allowed to flow through the rinse valve **72** when the ball valve **110** is open. During operation, the ball valve **110** is normally in a closed position to prevent flow of rinse fluid through the rinse valve **72**. The rinse fluid flows through both the pilot port **125** to register at the pilot chamber **117**, and through the flow ports **126** to register in the flow chamber **118**. Because there is no rinse fluid flow, the rinse fluid pressure is the same in both the pilot chamber **117** and the flow chamber **118**, so that the spring **127** urges the diaphragm **122** and poppet valve **124** to the open position, as shown in FIG. **7A**.

In response to a flush command, the ball valve **110** is rotated to the open position so that the ball valve flow passage **113** communicates the outlet bore **103** to the outlet **105**, thereby creating fluid flow through the valve **72** (FIG. **7B**). During fluid flow, the rinse fluid experiences a pressure drop as it passes through the flow ports **126**, thereby reducing the fluid pressure in the flow chamber **118** while the pressure in the pilot chamber **117** stays substantially the same. The resulting pressure differential across the diaphragm **122** ultimately overcomes the force of the spring **127** so that the diaphragm **122** and poppet valve **124** move to the closed position, as shown in FIG. **7C**. When the diaphragm is in the closed position, fluid flow through the rinse valve **72** is again cut off, this time by the engagement of the diaphragm **122** with the intermediate wall **123**. Because of the fuse valve **120**, the volume of rinse fluid passing through the open ball valve **110** is substantially constant from flush to flush, regardless of the rinse fluid pressure supplied to the rinse valve **72**. It will also be appreciated that the fuse valve **120** provides a redundant shut-off, so that the ball valve **110** or the fuse valve **120** may be used to stop rinse fluid flow should the other fail.

The rinse valve **72** further includes a face value **130** for returning the diaphragm **122** back to the open position after the ball valve **110** is subsequently closed. Referring to FIG. **6**, a bypass bore **131** is formed in the housing block **100** that connects the inlet bore **101** to an auxiliary bore **132**. A reset bore **134** intersects the bypass bore **131** and communicates with a ball valve bore **135** formed in the housing block **100**. A reset insert **136** is inserted in the reset bore **134** and has a top surface adapted to engage a bottom of the ball valve **110**. The ball valve **110** is formed with reset passages **137** extending into the ball valve **110** to a transverse passage **138** extending entirely through the ball valve **110**. The reset passages **137** are located on the ball valve **110** so that they align with the reset insert **136** only when the ball valve **110** is in the closed position. The seal **114** prevents rinse fluid from leaking from the transverse passage **138** to the outlet **105**. No seal is provided upstream of the ball valve **110** so that, when one of the reset passages **137** is aligned with the insert **136**, fluid communication is established from the inlet bore **101**, through the bypass and reset bores **131**, **134** and one of the reset passages **137** to the flow chamber **118**.

According to the illustrated embodiment, the rinse valve **72** also includes a drain valve **133** disposed in the auxiliary bore **132** to provide freeze protection, as is well known in the art.

In operation, the diaphragm **122** moves to the closed position while the ball valve **110** is open, thereby stopping rinse fluid flow through the rinse valve **72** (FIG. **7C**). With the ball valve **110** in the open position, neither reset passage **137** is aligned with the reset insert **136**. The ball valve **110** is subsequently closed, thereby aligning one of the reset passages **137** with the insert **136** and establishing fluid communication from the inlet bore **101** to the flow chamber **118** (FIG. **7D**). The incoming rinse fluid pressure registers at the flow chamber **118**, so that the flow chamber reaches the same pressure as the pilot chamber **117**. With the differential pressure across the diaphragm **121** removed, the spring **127** is again followed to urge the diaphragm **121** to the open position, thereby resetting the fuse valve **120** to the position shown in FIG. **7A**.

In the preferred embodiment, a position sensor is used to provide feedback regarding poppet valve position feedback. In the illustrated embodiment, a magnet **140** is attached to the poppet valve **124**, and a hall effect switch **141** is located outside of the bonnet **121** in a switch enclosure **142** attached to the bonnet **121** (FIG. **6**). The hall effect switch **141** provides a signal that varies according to the position of the magnet **140** to indicate the position of the poppet valve **124**. The poppet valve position signal may be used for diagnostic

purposes such as fault detection by comparing the position signal to the position of the disk **83** or ball valve **110**.

The FCU **74** comprises a housing **150** attached to the discharge valve housing half **78***b* opposite the rinse valve **72** (FIG. **4**). The housing **150** encloses one or more circuit boards (not shown) for controlling operation of the toilet **10**. In addition to the typical inputs and outputs, the FCU **74** also receives feedback from the poppet valve position sensor **141**.

The FCU housing **150** further houses a position sensor for determining the position of the disk **83**. As best shown in FIG. **5**A, magnets **152** are attached to the axle end **84***b* of the disk **83**. The axle end **84***b* extends into the FCU housing **150**, so that the magnets **152** are positioned proximal the control board. Hall effect switches **154** are provided directly on the circuit board for sensing the magnets **152** and thus determining the rotational position of the disk **83**. In the illustrated embodiment, a pair of magnets **152** are attached to the axle end **84***b*, and a pair of hall effect switches **154** are attached to the circuit board. The switches **154** actuate between on and off positions depending on the proximity of the magnets, thereby indicating the position of the disk **83**. As a result, the position of the disk **83** is directly sensed rather than inferring disk position based on actuator position. In addition, the switches **154** are located inside the FCU housing **150** and are therefore isolated from contamination due to lubrication or other material.

With the above construction, the valve set **8** is quickly and easily removed and replaced. To remove the valve set **8**, the discharge pipe **21** is disconnected from the sewer line **11**, the rinse valve inlet **102** is disconnected from the rinse supply line **19**, and the quick-disconnect coupling **108***b* of the second rinse fluid pipe **35***b* is disconnected from the vacuum breaker **33**. The knurled screws **37** are then removed from the bracket **27** and the valve set **8** with attached transfer pipe **44** is lowered so that the transfer pipe disengages the bowl outlet **42**. Thus the valve set **8** is removed with the transfer pipe **44**, outlet pipe **12**, discharge pipe **21**, and second rinse pipe **35***b*. A new valve set **8**, also having a new transfer pipe **44**, outlet pipe **12**, discharge pipe **21**, and second rinse pipe **35***b* may then be attached to the bracket **27** and reconnected.

From the foregoing, it will be appreciated that the valve set **8** of the present invention incorporates all of the valve and control apparatus. The rinse valve **72**, FCU **74**, and actuator **76** are all mounted to the discharge valve **70** to create an LRU, wherein a single module may be targeted for maintenance in the event of a valve or control failure. The wiring between the components may remain in place so that, in the event of a valve or control failure, only the piping connections between the valve set **8** and the drain, sewer, and rinse water piping need be undone to remove the valve set **8**.

Maintenance of the modular vacuum toilet **10** is entirely different from that of conventional vacuum toilets. Instead of defining the entire toilet as an LRU, the toilet **10** defines individual components or groups of components as LRUs. The bowl **36** may be independently removed from the toilet **10** and replaced. Similarly, the valve set **8** may be separately removed from the toilet **10**. Furthermore, the individual components may be quickly removed with the use of few or no tools.

The branch **17** and discharge pipe **21** of the valve set **8** are adapted to provide both right- and left-handed discharge configurations without additional modifications to the other toilet components, thereby further reducing the number of parts needed in stock

The foregoing detailed description has been given for clearness of understanding only, and no unnecessary limitations should be understood therefrom, as modifications would be obvious to those skilled in the art.

What is claimed is:

1. A modular vacuum toilet for use in a vacuum toilet system having a sewer line placeable under partial vacuum pressure and a source of rinse fluid, the modular vacuum toilet comprising:

a frame support structure having a top with an opening therethrough;

a removable bowl including a sidewall sized for insertion into the opening and having an out-turned flange supported by the top of the support structure, the bowl defining an outlet and having a rinse fluid dispenser associated therewith; and

a valve set module including:

a discharge valve having an inlet in fluid communication with the bowl outlet, an outlet in fluid communication with the sewer line, and a moveable discharge valve member disposed between the discharge valve inlet and outlet;

a rinse fluid valve having an inlet in fluid communication with the source of rinse fluid, an outlet in fluid communication with the rinse fluid dispenser, and a movable rinse fluid valve member disposed between the rinse fluid valve inlet and outlet; and

a flush control unit having a circuit board operably connected to the discharge valve and rinse fluid valve for controlling actuation of the discharge valve member and rinse fluid valve member.

2. The modular vacuum toilet of claim **1**, in which the support structure includes slots, and in which the bowl includes tabs adapted to lockingly engage the slots, thereby to secure the bowl in place.

3. The modular vacuum toilet of claim **2**, in which the tabs are manually releasable to disengage from the slots.

4. The modular vacuum toilet of claim **1**, in which a rinse fluid pipe communicates between the rinse fluid valve outlet and the rinse fluid dispenser, wherein the rinse fluid pipe is releasably attached to the rinse fluid valve outlet with a coupling.

5. The modular vacuum toilet of claim **4**, in which the coupling is manually releasable.

6. The modular vacuum toilet of claim **1**, in which a transfer pipe has a first end connected to the discharge valve inlet, and a second end adapted to releasably engage the bowl outlet.

7. The modular vacuum toilet of claim **6**, in which the second end of the transfer pipe includes a collar sized to releasably engage and seal with the bowl outlet.

8. The modular vacuum toilet of claim **1**, in which a rinse fluid line communicates between the rinse fluid valve inlet and the source of rinse fluid, wherein the rinse fluid valve inlet is releasably connected to the rinse fluid line with a coupling.

9. The modular vacuum toilet of claim **8**, in which the coupling is manually releasable.

10. The modular vacuum toilet of claim **1**, in which a discharge pipe communicates between the discharge valve outlet and the sewer line, wherein the discharge pipe is adapted for releasable connection to the sewer line.

11. The modular vacuum toilet of claim **1**, in which the support structure includes a bracket, and in which fasteners are provided for releasably securing the valve set module to the bracket.

12. The modular vacuum toilet of claim **11**, in which the fasteners comprise knurled screws.

13. A method of servicing a vacuum toilet having a waste receptacle for receiving waste defining an outlet and having a rinse fluid dispenser associated therewith, a stationary frame support having a top with an opening therethrough, the waste receptacle including a sidewall sized for insertion into the opening and having an out-turned flange supported by the top of the support structure, a discharge valve having an inlet in fluid communication with the receptacle outlet, an outlet in fluid communication with a sewer line placeable under partial vacuum pressure, and a moveable discharge valve member disposed between the discharge valve inlet and the discharge valve outlet, a rinse fluid valve having an inlet in fluid communication with a source of rinse fluid, an outlet in fluid communication with the rinse fluid dispenser, and a moveable rinse fluid valve member disposed between the rinse fluid valve inlet and the rinse fluid valve outlet, and a flush control unit adapted to control actuation of the discharge valve member and rinse fluid valve member, in which at least one of the discharge valve, rinse fluid valve, flush control unit, and waste receptacle is a line replaceable unit, the method comprising:

removing the faulty line replaceable unit from the toilet; and

installing a new line replaceable unit into the toilet.

14. The method of claim 13, the waste receptacle is the line replaceable unit.

15. The method of claim 14, in which the support structure includes slots, and in which the waste receptacle includes tabs adapted to lockingly engage the slots, thereby to secure the waste receptacle in place.

16. The method of claim 15, in which the tabs are manually releasable to disengage from the slots.

17. The method of claim 13, in which the discharge valve, rinse fluid valve, and flush control unit are integrally provided in a valve set, the valve set being a line replaceable unit.

18. The method of claim 13, in which a rinse fluid pipe communicates between the rinse fluid valve outlet and the rinse fluid dispenser, wherein the rinse fluid pipe is releasably attached to the rinse fluid dispenser with a coupling.

19. The method of claim 18, in which the coupling is manually releasable.

20. The method of claim 13, in which a transfer pipe has a first end connected to the discharge valve inlet, and a second end adapted to releasably engage the waste receptacle outlet.

21. The method of claim 20, in which the second end of the transfer pipe includes a collar sized to releasably engage and seal with the waste receptacle outlet.

22. The method of claim 13, in which a rinse fluid line communicates between the rinse fluid valve inlet and the source of rinse fluid, wherein the rinse fluid valve inlet is releasably connected to the rinse fluid line with a coupling.

23. The method of claim 22, in which the coupling is manually releasable.

24. The method of claim 13, in which a discharge pipe communicates between the discharge valve outlet and the sewer line, wherein the discharge pipe is adapted for releasable connection to the sewer line.

25. The method of claim 13, in which the vacuum toilet includes a support structure having a bracket, and in which fasteners are provided for releasably securing the valve set to the bracket.

26. The method of claim 25, in which the fasteners comprise knurled screws.

* * * * *

EXHIBIT B

US006536054B2

(12) **United States Patent**
Anderson et al.

(10) **Patent No.: US 6,536,054 B2**
(45) **Date of Patent: Mar. 25, 2003**

(54) **VACUUM TOILET BOWL ASSEMBLY HAVING REMOVABLE BOWL**

(75) Inventors: **William Bruce Anderson**, Rockford, IL (US); **Mark A. Pondelick**, Roscoe, IL (US); **Jay D. Stradinger**, Roscoe, IL (US); **Douglas M. Wallace**, Roscoe, IL (US); **Arthur J. McGowan, Jr.**, Thornton, CO (US); **Michael B. Hancock**, Rockford, IL (US); **Ian Tinkler**, Rockford, IL (US)

(73) Assignee: **Evac International Oy**, Helsinki (FI)

(*) Notice: Subject to any disclaimer, the term of this patent is extended or adjusted under 35 U.S.C. 154(b) by 0 days.

(21) Appl. No.: **10/054,061**

(22) Filed: **Jan. 22, 2002**

(65) **Prior Publication Data**

US 2002/0062519 A1 May 30, 2002

Related U.S. Application Data

(63) Continuation of application No. 09/713,861, filed on Nov. 16, 2000, now Pat. No. 6,347,416.

(51) **Int. Cl.**[7] **E03D 11/00**
(52) **U.S. Cl.** **4/431**; 4/434; 4/435
(58) **Field of Search** ..... 4/300, 316, 420, 4/429, 431–435, 479, 461, 474, DIG. 9, 458–460

(56) **References Cited**

U.S. PATENT DOCUMENTS

3,239,849 A		3/1966	Liljendahl	
3,860,973 A	*	1/1975	Uyeda et al.	4/332
3,922,730 A		12/1975	Kemper	
3,995,328 A		12/1976	Carolan et al.	
4,063,315 A		12/1977	Carolan et al.	
4,184,506 A		1/1980	Varis etal.	
4,246,925 A		1/1981	Oldfelt	
4,275,470 A		6/1981	Badger et al.	
4,357,719 A		11/1982	Badger et al.	
4,521,925 A		6/1985	Chen et al.	
4,713,847 A		12/1987	Oldfelt et al.	
5,007,117 A		4/1991	Oldfelt et al.	
5,133,583 A		7/1992	Mattsson et al.	
5,231,706 A	*	8/1993	Kendall	4/420
5,271,105 A	*	12/1993	Tyler	4/431
5,604,938 A		2/1997	Tyler	
5,732,417 A		3/1998	Pondelick	
5,909,968 A	*	6/1999	Olin et al.	4/431
6,131,596 A		10/2000	Monson	
6,152,160 A		11/2000	Bowder et al.	
6,216,285 B1		4/2001	Olin	

* cited by examiner

Primary Examiner—David J. Walczak
Assistant Examiner—Tuan Nguyen
(74) *Attorney, Agent, or Firm*—Marshall, Gerstein & Borun

(57) **ABSTRACT**

A vacuum bowl assembly for use in a vacuum toilet positioned on a support surface and having a discharge valve. The vacuum bowl assembly comprises a frame having a bottom member adapted to engage the support surface, and a top member defining a shoulder. A removable bowl is provided having a flange extending about an upper edge sized to engage the shoulder, and an outlet adapted for fluid communication with the discharge valve.

17 Claims, 4 Drawing Sheets

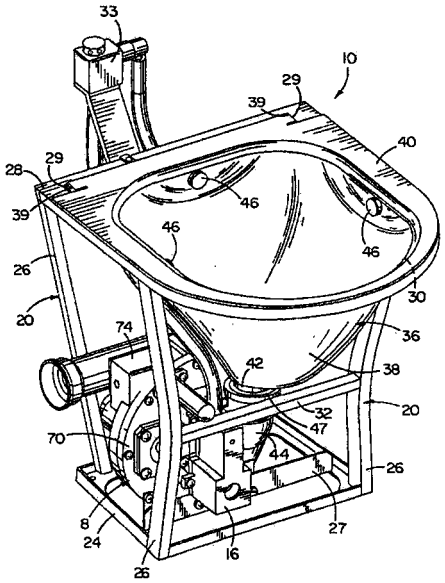

Ex. B

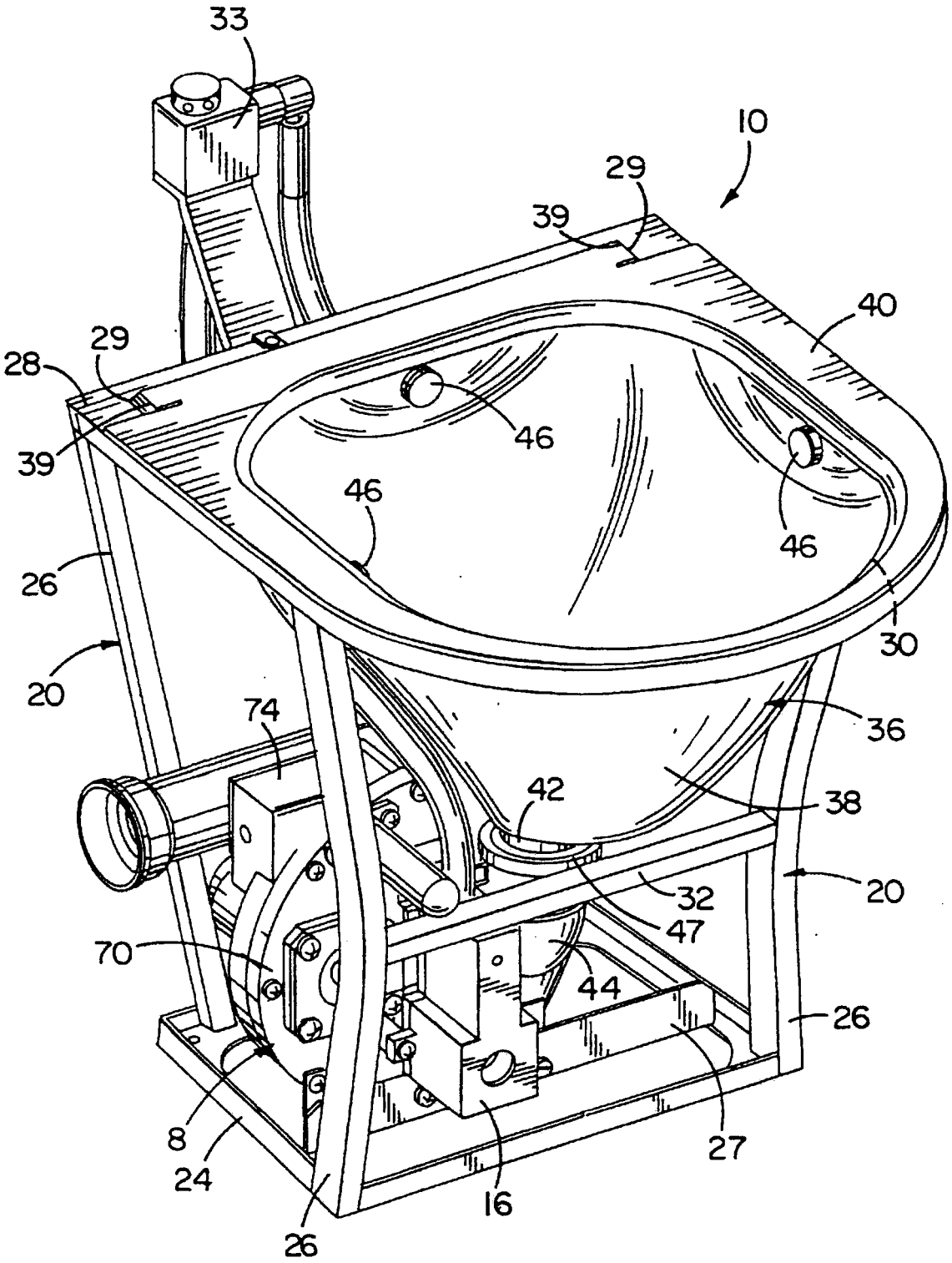
33
10
29
39
40
28
29
46
39
46
46
26
20
74
36
42
38
20
32
47
70
44
26
8
24
27
16
26

FIG. 1A

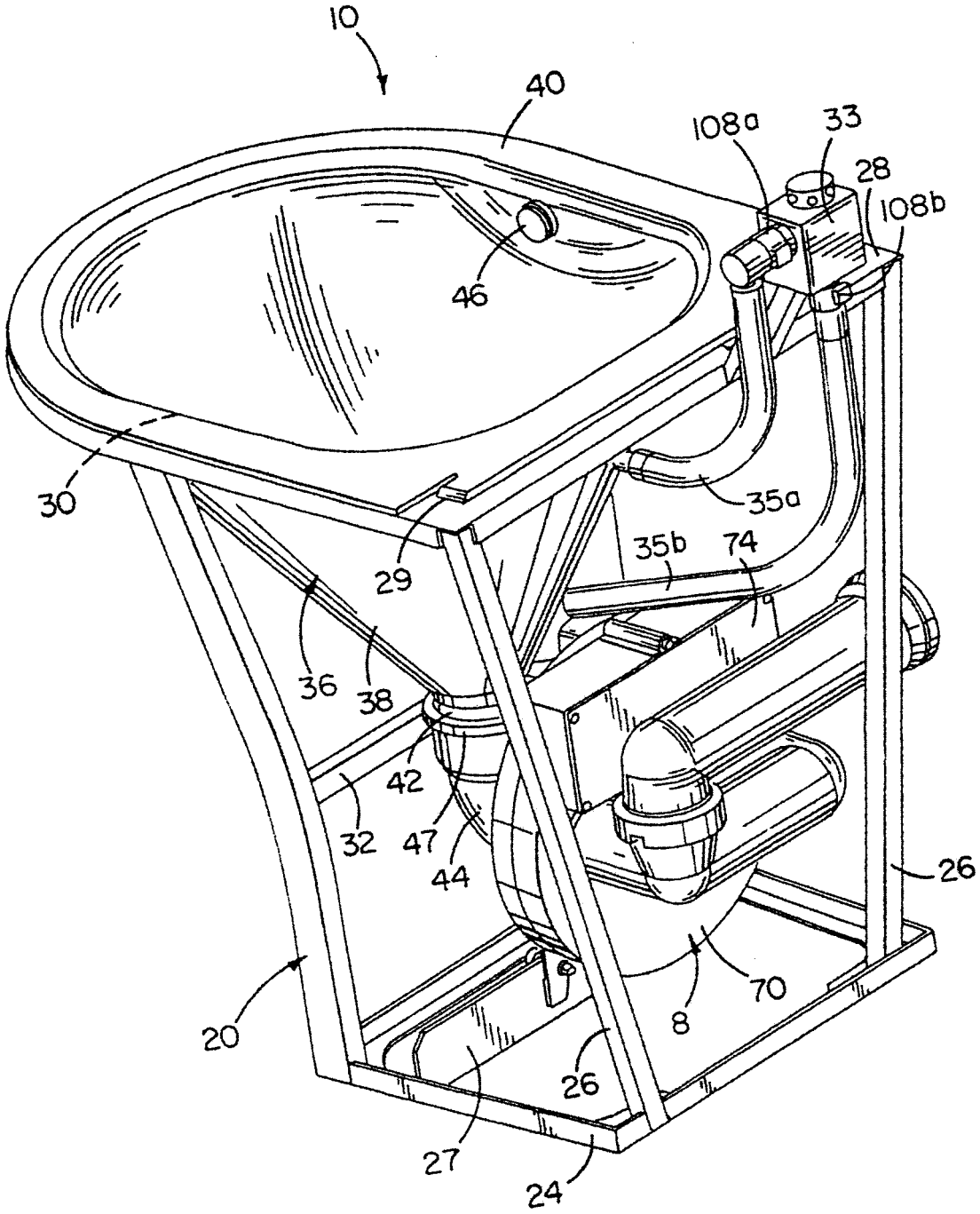
10
40
108a
33
28
108b
46
30
35a
29
35b
74
36
38
42
32
47
44
26
70
8
20
26
27
24

FIG. 1B

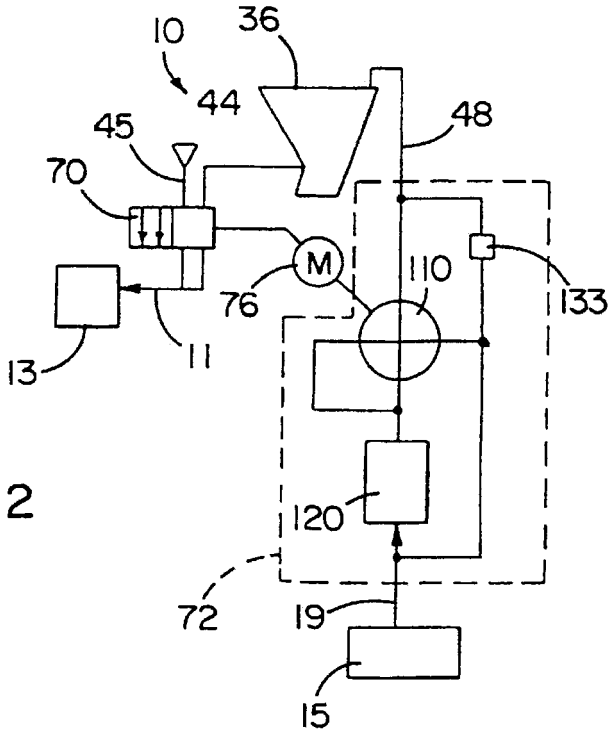
10
36
44
48
45
70
M
110
133
76
13
11
120
72
19
15

FIG. 2

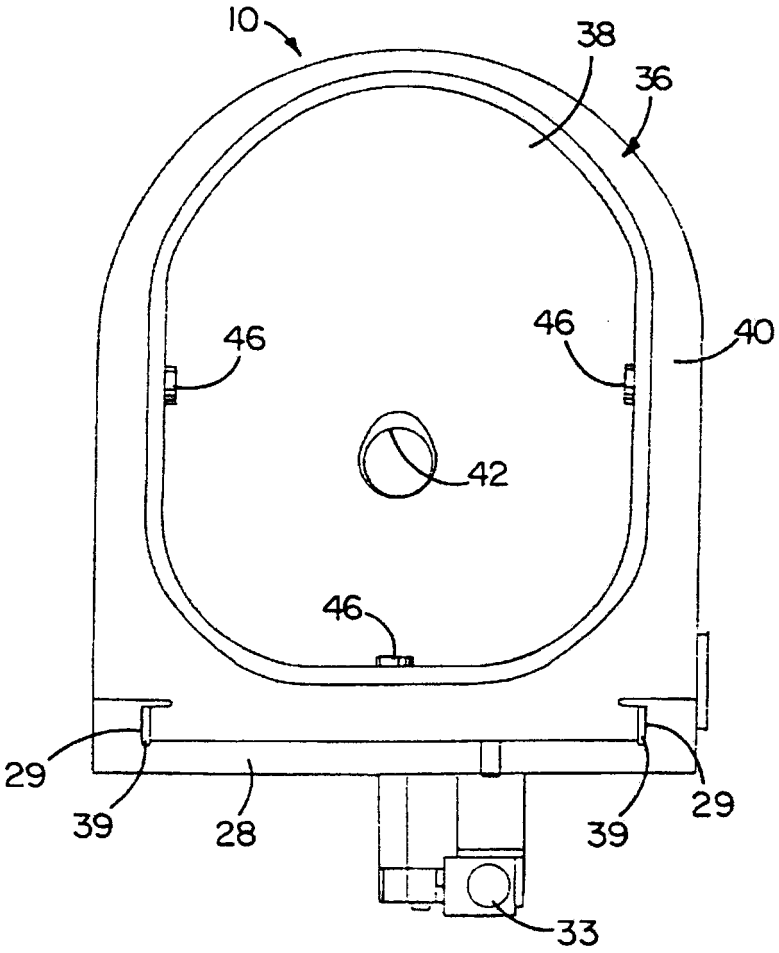
10
38
36
46
46
40
42
46
29
39
28
39
29
33

FIG. 3

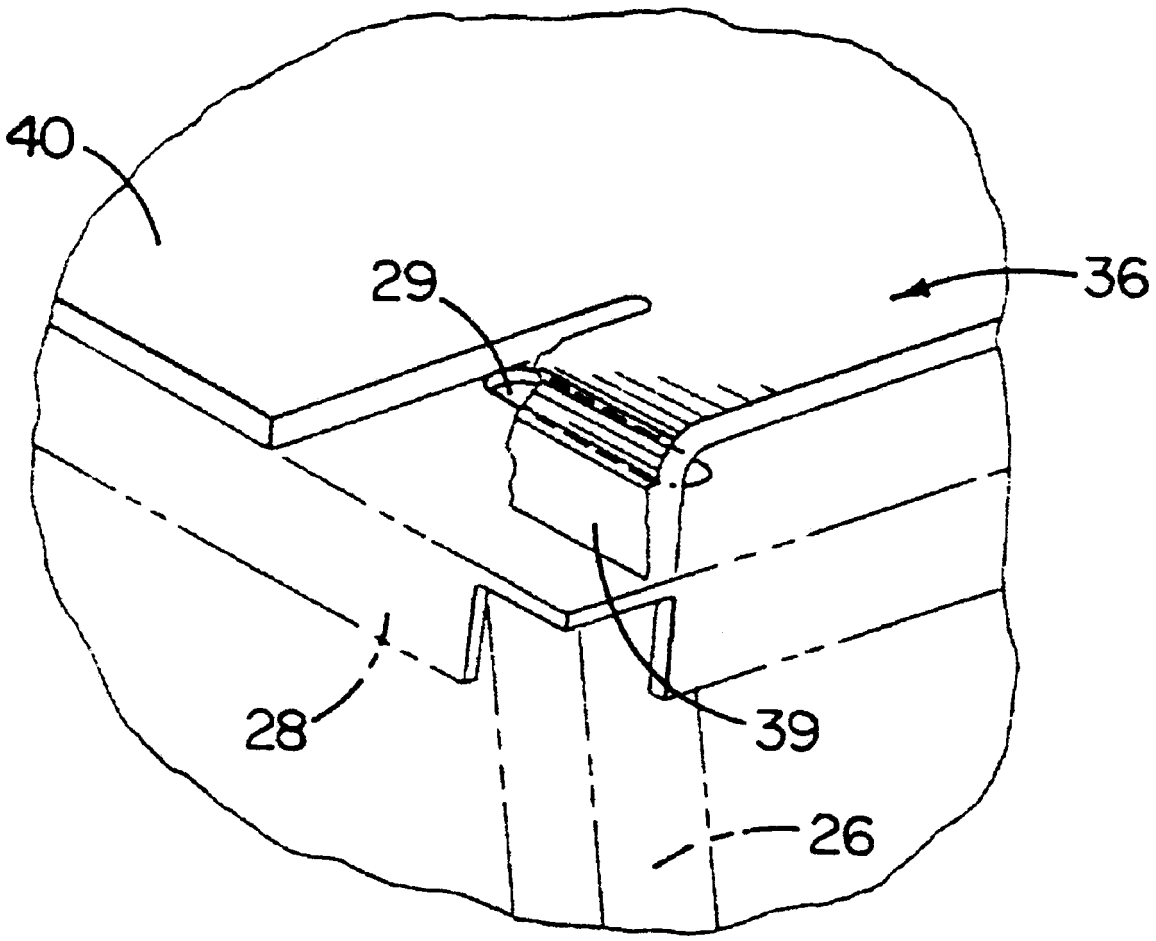

FIG. 4

VACUUM TOILET BOWL ASSEMBLY HAVING REMOVABLE BOWL

This is a continuation of U.S. application Ser. No. 09/713,861, filed Nov. 16, 2000, now U.S. Pat. No. 6,347,416.

FIELD OF THE INVENTION

The present invention generally relates to toilets and, more particularly, to vacuum toilet systems.

BACKGROUND OF THE INVENTION

Vacuum toilet systems are generally known in the art for use in both vehicle and stationary applications. A vacuum toilet system typically comprises a bowl for receiving waste having an outlet connected to a vacuum sewer line. A discharge valve is disposed between the bowl outlet and vacuum sewer line to selectively establish fluid communication therebetween. The vacuum sewer line is connected to a collection tank that is placed under partial vacuum pressure by a vacuum source, such as a vacuum pump. When the discharge valve is opened, material in the bowl is transported to the sewer pipe as a result of the pressure difference between the interior of the bowl and the interior of the sewer line. Conventional vacuum toilet systems also include a source of rinse fluid and a rinse fluid valve for controlling introduction of rinse fluid into the bowl.

Repair and maintenance of vacuum toilet systems is often overly time consuming and labor intensive. Maintenance concerns are particularly significant in aircraft applications, in which a number of sub-systems are installed on board. According to general practice in the airline industry, each sub-system includes one or more components which must be replaced in the event of failure, such components being commonly referred to as line replaceable units (LRUs). Presently, the entire toilet assembly is defined as the LRU for the vacuum toilet system. As a result, an airline must stock one or more replacement toilets in case of a toilet failure, so that the replacement toilet may be swapped in for the faulty toilet. A "bench test" is then performed on the faulty toilet to determine which components have failed in the toilet. The faulty components are then repaired or replaced (which may include significant disassembly and reassembly of the toilet) so that the toilet may be reused on another aircraft.

Each of the steps performed during a toilet repair is overly difficult and time consuming. To remove an entire toilet assembly from an aircraft requires disassembly of at least four self-locking mounting fasteners, an electrical connection, a grounding strap, a potable water line connection, and a waste discharge pipe connection. Each connection may be difficult to access, and may require a particular tool in order to loosen and disconnect. The same connections must then be reconnected for the replacement toilet.

Even if it were possible to remove and replace a single toilet component, it would be overly difficult and time consuming to do so. Removal of a component would require disconnection of several wires and pipes, and the components are often located in areas which are difficult to access. Furthermore, it would be difficult to diagnose whether one component or several components had failed. There exists a multitude of combinations of simultaneous component failures, which may lead to trouble-shooting errors and the replacement or repair of non-faulty components.

Certain repairs, which may not require substantial amounts of trouble shooting to identify the failed components, still require significant amounts of disassembly and reassembly. The toilet bowl, for example, is typically formed of stainless steel covered with a non-stick coating that is subject to failure. In conventional toilets, the bowl is a structural, load bearing component that is attached to a base support. In some toilets, the base support is permanently attached to the bowl and therefore the entire toilet must be removed to replace the coating. In other toilets, the bowl is removable from the support base, and therefore fasteners must be removed and the bowl must be disconnected from the rinse fluid and discharge lines. In addition, the rinse ring or nozzle used to direct rinse fluid into the bowl must be removed. Furthermore, if the non-stick coating fails, the bowl must be removed from all of the other toilet components for a re-coating process, steps of which are performed at high temperatures to remove the old coating and apply a new coating to the toilet bowl surface. Accordingly, replacement of a conventional bowl is overly complicated and time consuming.

In addition, the use of the bowl as a structural, load-bearing member in conventional toilets overly limits the selection of bowl materials. Because the bowl must be capable of supporting the weight of a user and any components mounted thereto, it is typically made of a metal such as stainless steel. Because only rigid materials may be used, the selection of materials for use in conventional toilet bowls is overly limited.

SUMMARY OF THE INVENTION

In accordance with certain aspects of the present invention, a waste receptacle is provided for use in a vacuum toilet system having a discharge valve with an inlet. The waste receptacle comprises a support structure, and a bowl releasably attached to the support structure, the bowl defining an outlet adapted to engage and seal with the discharge valve outlet.

In accordance with additional aspects of the present invention, a vacuum bowl assembly is provided for use in a vacuum toilet positioned on a support surface and having a discharge valve with an inlet. The assembly comprises a frame having a bottom member adapted to engage the support surface, and a top member defining an opening, a pair of slots being formed in the top member. A removable bowl has a sidewall sized for insertion into the opening and a flange carrying a pair of tabs sized to lockingly engage the slots, the bowl defining an outlet adapted for fluid communication with the discharge valve inlet.

In accordance with further aspects of the present invention, a vacuum bowl assembly is provided for use in a vacuum toilet positioned on a support surface and having a discharge valve with an inlet. The assembly comprises a frame having a bottom member adapted to engage the support surface, and a top member defining an opening, a pair of slots being formed in the top member. A removable plastic bowl has a sidewall sized for insertion into the opening and a flange carrying a pair of tabs sized to lockingly engage the slots, the bowl defining an outlet adapted for fluid communication with the discharge valve inlet.

Other features and advantages are inherent in the apparatus claimed and disclosed or will become apparent to those skilled in the art from the following detailed description and its accompanying drawings.

BRIEF DESCRIPTION OF THE DRAWINGS

FIGS. 1A and 1B are front and rear perspective views, respectively, of a vacuum toilet frame and bowl in accordance with the present invention.

FIG. **2** is a schematic diagram of the vacuum toilet of FIG. **1**.

FIG. **3** is a top view of the bowl.

FIG. **4** is an enlarged view of a tab used to secure the bowl to the frame.

DETAILED DESCRIPTION OF THE PREFERRED EMBODIMENTS

Referring initially to FIGS. **1A**, **1B**, and **2**, a vacuum toilet **10** suitable for use in vehicle is shown including a frame **20** and bowl **36** in accordance with the present invention. The vehicle is provided with a sewer line **11**, a vacuum tank **13** connected to the sewer line **11**, and a vacuum source (not shown) for placing the vacuum tank **13** under partial vacuum pressure. The vehicle further includes a source of rinse fluid **15** connected to a rinse fluid supply line **19**.

The toilet **10** preferably includes a discharge valve **70** adapted for connection to the vacuum tank, and a rinse valve **72** adapted for connection to the source of rinse fluid. A flush control unit (FCU) **74** is also provided for controlling operation of the discharge valve **70** and rinse valve **72**. As shown in the illustrated embodiment, the discharge valve **70**, rinse valve **72**, and FCU **74** are preferably provided as an integral valve set **8**, as described in greater detail in commonly owned and co-pending U.S. patent application Ser. No. 09/713,870, entitled "Integrated Valve Set For Vacuum Toilet" (Attorney Docket No. 05007/36582), incorporated herein by reference.

The frame **20** is provided for supporting the components of the vacuum toilet **10**. As best shown with reference to FIGS. **1A** and **1B**, the frame **20** includes a bottom member **24** adapted for attachment to a support surface of the vehicle. Vertical supports **26** extend upwardly from the bottom member **24**, and a top member **28** is attached to the vertical supports. The top member **28** is formed with an opening **30** near the front, and two slots **29** near the rear thereof. In the illustrated embodiment, an intermediate support **32** is attached between adjacent vertical supports **26**, and a bracket **27** is attached to the bottom member **24**. The bottom member **24**, top member **28**, and bracket **27** are preferably formed of sheet metal, while the vertical supports **26** and intermediate support **32** are preferably formed of tube steel, both of which are readily available and inexpensive. Other materials having sufficient rigidity, however, may also be used.

The bowl **36** is provided for receiving waste material. The bowl **36** has a curved sidewall **38** and an out-turned flange **40** extending about an upper edge of the sidewall (FIGS. **1A** and **1B**). The out-turned flange **40** further includes tabs **39** sized for insertion through the slots **29** formed in the frame top member **28**, as best shown in FIG. **4**. A bottom of the sidewall is formed in an outlet **42**, and the sidewall **38** is sized for insertion into the opening **30** of the frame top member **28**. The outlet **42** fluidly communicates with the discharge valve **70** through a transfer pipe **44**. The transfer pipe **44** preferably includes a collar **47** sized to frictionally engage and seal with the outlet **42**.

To attach the bowl **36** to the frame **20**, the bowl **36** is inserted through the opening **30** and positioned so that the tabs **39** are aligned with the slots **29** and the outlet **42** is aligned with the collar **47**. The bowl **36** is lowered so that the tabs **39** pass through and lock with the slots **29**. Simultaneously, the outlet **42** is inserted into and engages the collar **47**. In this position, the out-turned flange **40** closely overlies the frame top member **28** so that downward forces applied to the bowl **36** are transferred to the frame **20**. As a result, the bowl **36** is not a load-bearing component, and may be made of non-structural materials such as plastic, thin-walled metal (defined herein as less than approximately 0.040" thick), or other known alternatives. In addition, the bowl **36** is separable from the frame **20** and therefore may be replaced independently from the rest of the toilet **10**. Still further, the tabs **39** may be manipulated manually, and therefore no tools are required to install or remove the bowl **36**.

At least one rinse fluid dispenser, such as nozzles **46**, is provided inside the bowl **36** for directing rinse fluid over the surface of the bowl. As best shown in FIGS. **1A** and **1B**, a plurality of nozzles **46** are spaced about the bowl sidewall **38** and are oriented to direct rinse fluid over portions of the bowl surface. The number of nozzles may be more or less than that shown, depending on the size of the bowl surface to be rinsed. As used herein, the phrase "rinse fluid dispenser" includes the illustrated nozzles **46**, as well as known substitutes, such as spray rings.

A vacuum breaker **33** is positioned above the top edge of the bowl **36**, and a first rinse fluid pipe **35***a* extends from the nozzles **46** to the vacuum breaker **33**. A second rinse pipe **35***b* extends from the vacuum breaker **33** to the rinse valve **72**. Quick-disconnect couplings **108***a*, **108***b* are provided to connect the first and second rinse fluid pipes **35***a*, **35***b* to the vacuum breaker.

The separate frame **20** advantageously allows the bowl **36** to be a line replaceable unit (LRU). When the bowl **36** becomes worn or otherwise needs replacement, a maintenance person may simply disconnect the first rinse fluid pipe **35***a* using the quick disconnect coupling **108***a*, manipulate the tabs **39** so that the are disengaged from the slots **29**, and pull upward on the bowl **36** to remove the bowl **36** from the frame **20**. A new bowl **36** may then be inserted into the frame **20** as described above, and the first rinse fluid pipe **35***a* may be connected to the vacuum breaker **33** using the quick-disconnect coupling **108***a*. As a result, the entire toilet need not be removed and serviced. The bowl replacement process is not only fast, but does not require the use of any tools. In addition to facilitating bowl removal and replacement, the frame **20** allows a wider range of materials to be used for the bowl **36**, since the frame **20**, rather than the bowl **36**, supports the load.

The foregoing detailed description has be given for clearness of understanding only, and no unnecessary limitations should be understood therefrom, as modifications would be obvious to those skilled in the art.

What is claimed is:

1. A waste receptacle assembly for use in a vacuum toilet system having an inlet coupling, the waste receptacle assembly comprising:

a frame including at least two vertical supports and a top member attached to the at least two vertical supports, the top member defining an opening and having a receptacle engaging portion; and

a receptacle sized for at least partial insertion through the frame top member opening, the receptacle having an abutting portion positioned to engage the receptacle engaging portion of the frame when the receptacle is at least partially inserted through the frame top member opening thereby to maintain the receptacle in an installed position, the receptacle further having an outlet sized and adapted for releasable sealing engagement with the inlet coupling when the receptacle is in the installed position;

wherein the receptacle is toollessly inserted into and removed from the installed position independent of the frame.

2. The assembly of claim 1, in which the frame includes at least one slot, and in which the receptacle includes a tab adapted to lockingly engage the slot, thereby to secure the receptacle in the installed position.

3. The assembly of claim 2, in which the tab is toollessly releasable to disengage from the slot.

4. The assembly of claim 1, in which the top member of the frame further defines the receptacle engaging portion.

5. The assembly of claim 4, in which the receptacle includes a flange defining the abutting portion of the receptacle.

6. The assembly of claim 1, in which the vacuum waste system further comprises a rinse valve and a rinse fluid pipe, and in which the receptacle further comprises a rinse fluid dispenser adapted for toollessly releasable attachment to the rinse fluid pipe.

7. The assembly of claim 1, in which the receptacle is made of a plastic material.

8. The assembly of claim 1, in which the receptacle is made of a thin-walled steel.

9. The assembly of claim 1, in which the receptacle is formed as a toilet bowl.

10. A method of toollessly replacing a receptacle of a waste receptacle assembly used in a vacuum toilet system having an inlet coupling, the waste receptacle assembly including a frame including at least two vertical supports and a top member attached to the at least two vertical supports defining an opening, the frame further having a receptacle engaging portion, the receptacle being sized for at least partial insertion through the frame top member opening and having an abutting portion positioned to engage the receptacle engaging portion of the frame to maintain the receptacle in an installed position, the receptacle further having an outlet sized and adapted for releasable sealing engagement with the inlet coupling, the method comprising:

lifting the receptacle while leaving the frame in place so that the abutting portion of the receptacle disengages from the receptacle receiving portion of the frame and the receptacle outlet disengages from the inlet coupling;

withdrawing the receptacle through the frame top member opening to remove the receptacle from the frame;

providing a new receptacle sized for at least partial insertion through the frame top member opening having an abutting portion positioned to engage the receptacle engaging portion of the frame and an outlet sized to sealingly engage the inlet coupling; and

inserting a new receptacle at least partially through the frame top member opening so that the abutting portion of the new receptacle contacts the receptacle engaging portion of the frame and the outlet of the new receptacle engages the inlet coupling.

11. The method of claim 10, in which the frame includes at least one slot, and in which each of the receptacle and new receptacle includes a tab adapted to lockingly engage the slot, wherein the tab of the receptacle is removed from the slot during the lifting step and the tab of the new receptacle is inserted into the slot during the inserting step.

12. The method of claim 10, in which the top member of the frame further defines the receptacle engaging portion.

13. The method of claim 12, in which the each of the receptacle and new receptacle includes a flange defining the abutting portion.

14. The method of claim 10, in which the vacuum waste system further comprises a rinse valve and a rinse fluid pipe, and in which each of the receptacle and new receptacle further comprises a rinse fluid dispenser, the method further comprising detaching the rinse fluid dispenser of the receptacle from the rinse fluid pipe prior to the lifting step and attaching the rinse fluid dispenser of the new receptacle to the rinse fluid pipe after the inserting step.

15. The method of claim 10, in which the receptacle is made of a plastic material.

16. The method of claim 10, in which the receptacle is made of a thin-walled steel.

17. The method of claim 10, in which the receptacle is formed as a toilet bowl.

* * * * *

EXHIBIT C

US006536055B2

(12) **United States Patent**
Pondelick et al.

(10) **Patent No.: US 6,536,055 B2**
(45) **Date of Patent: *Mar. 25, 2003**

(54) **MODULAR VACUUM TOILET WITH LINE REPLACEABLE UNITS**

(75) Inventors: **Mark A. Pondelick**, Roscoe, IL (US); **Jay D. Stradinger**, Roscoe, IL (US); **William Bruce Anderson**, Rockford, IL (US); **Arthur J. McGowan, Jr.**, Thornton, CO (US); **Douglas M. Wallace**, Roscoe, IL (US); **Ian Tinkler**, Rockford, IL (US); **Michael B. Hancock**, Rockford, IL (US)

(73) Assignee: **Evac International Oy**, Helsinki (FI)

(*) Notice: Subject to any disclaimer, the term of this patent is extended or adjusted under 35 U.S.C. 154(b) by 0 days.

This patent is subject to a terminal disclaimer.

(21) Appl. No.: **10/061,681**

(22) Filed: **Feb. 1, 2002**

(65) **Prior Publication Data**

US 2002/0069459 A1 Jun. 13, 2002

Related U.S. Application Data

(63) Continuation of application No. 09/713,892, filed on Nov. 16, 2000, now Pat. No. 6,353,942.

(51) **Int. Cl.**[7] **E03D 11/00**

(52) **U.S. Cl.** **4/431**; 4/434; 4/435; 137/588; 137/595

(58) **Field of Search** 4/300, 316, 420, 4/431–435, 458; 137/588, 595

(56) **References Cited**

U.S. PATENT DOCUMENTS

3,239,849 A		3/1966	Lilgendahl	
3,860,973 A	*	1/1975	Uyeda et al.	4/435
3,922,730 A		12/1975	Kemper	
3,995,328 A		12/1976	Carolan et al.	
4,063,315 A		12/1977	Carolan et al.	
4,184,506 A		1/1980	Varis et al.	
4,246,925 A		1/1981	Oldfelt	
4,275,470 A		6/1981	Badger et al.	
4,357,719 A		11/1982	Badger et al.	
4,521,925 A		6/1985	Chen et al.	
4,713,847 A		12/1987	Oldfelt et al.	
5,007,117 A		4/1991	Oldfelt et al.	
5,133,853 A		7/1992	Mattsson et al.	
5,271,105 A	*	12/1993	Tyler	4/431
5,604,938 A		2/1997	Tyler	
5,732,417 A		3/1998	Pondelick	
5,909,968 A	*	6/1999	Olin et al.	4/431
6,131,596 A		10/2000	Monson	
6,152,160 A		11/2000	Bowden Wilcox et al.	
6,216,285 B1		4/2001	Olin	

* cited by examiner

Primary Examiner—David J. Walczak
Assistant Examiner—Tuan Nguyen
(74) *Attorney, Agent, or Firm*—Marshall, Gerstein & Borun

(57) **ABSTRACT**

A modular vacuum toilet, and a method of servicing such a toilet, are disclosed. The toilet is used with a vacuum toilet system having a sewer line placeable under partial vacuum pressure and a source of rinse fluid. The modular vacuum toilet comprises a frame and a removable bowl engaging and supported be the frame, the bowl defining an outlet and having a rinse fluid dispenser associated therewith. The modular vacuum toilet also has a valve set module. The valve set module includes a discharge valve having an inlet in fluid communication with the bowl outlet, an outlet in fluid communication with the sewer line, and a movable discharge valve member disposed between the discharge valve inlet and outlet. A rinse fluid valve is also incorporated into the valve set module and has an inlet in fluid communication with the source of rinse fluid, an outlet in fluid communication with the rinse fluid dispenser, and a movable rinse fluid valve member disposed between the rinse fluid valve inlet and outlet. The valve set module further includes a flush control unit having a circuit board operably connected to the discharge valve and rinse fluid valve for controlling actuation of the discharge valve member and rinse fluid valve member.

28 Claims, 9 Drawing Sheets

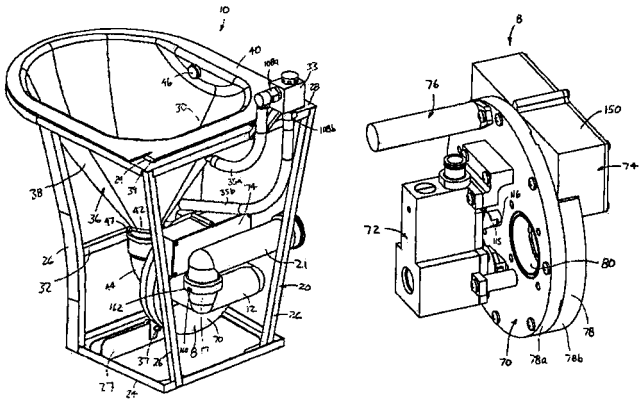

Ex. C

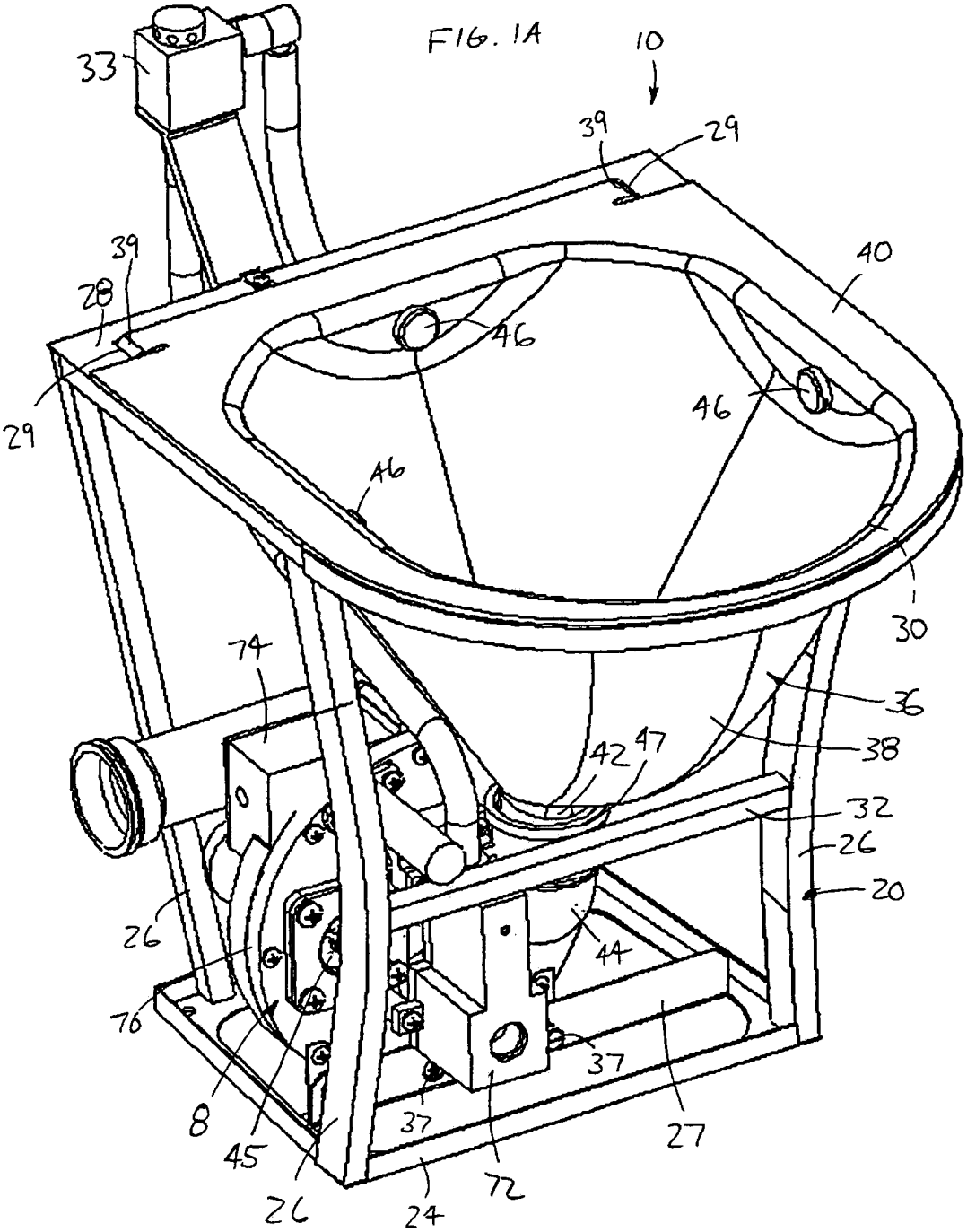
FIG. 1A
10
33
39
29
40
28
46
46
46
29
30
74
36
38
42
47
32
26
20
26
44
76
37
8
45
37
27
26
24
72

FIG. 1B

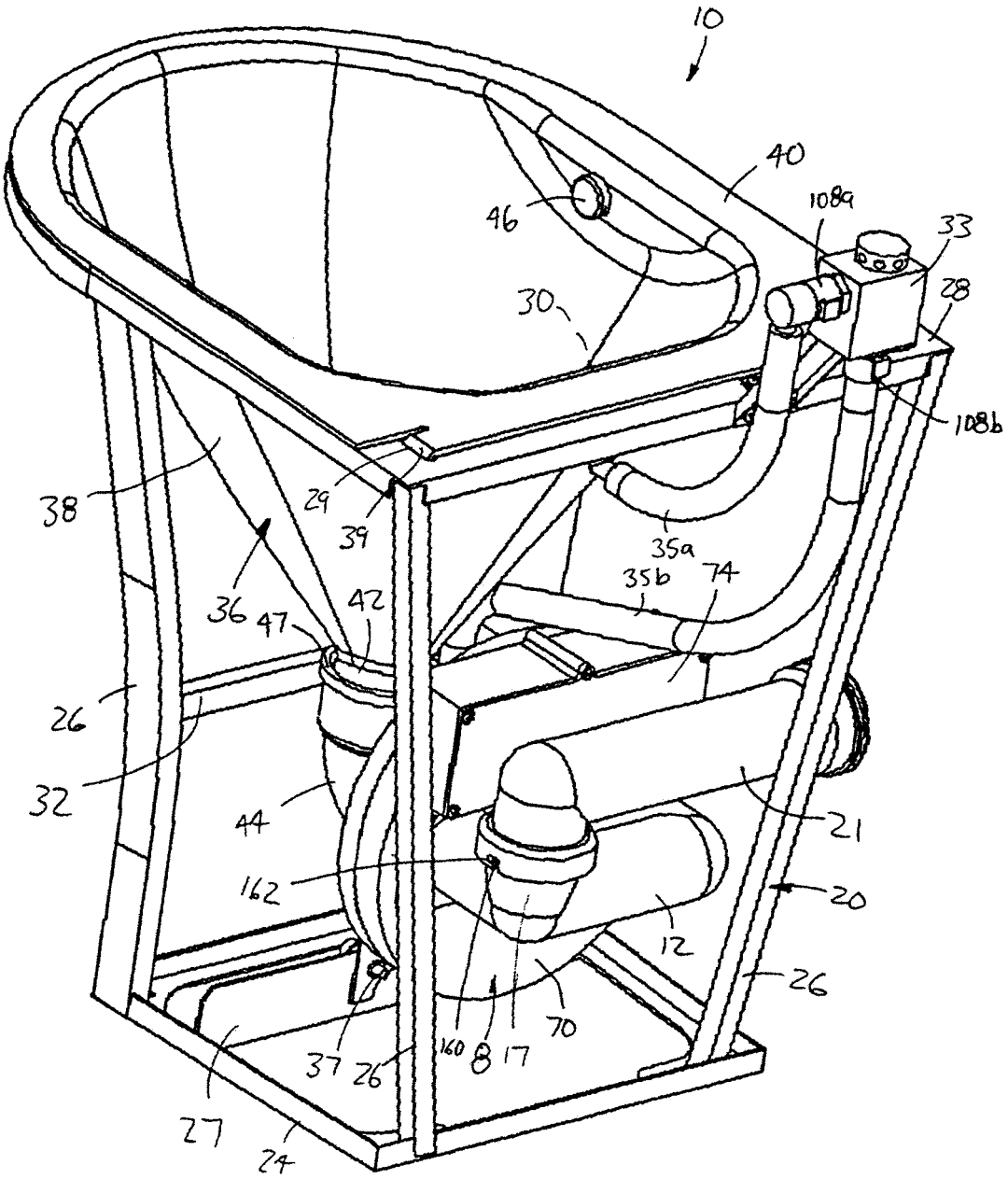
10
40
46
108a
33
28
30
108b
38
29
39
35a
35b
74
36
47
42
26
32
44
21
162
20
12
26
70
160
8
17
37
26
27
24

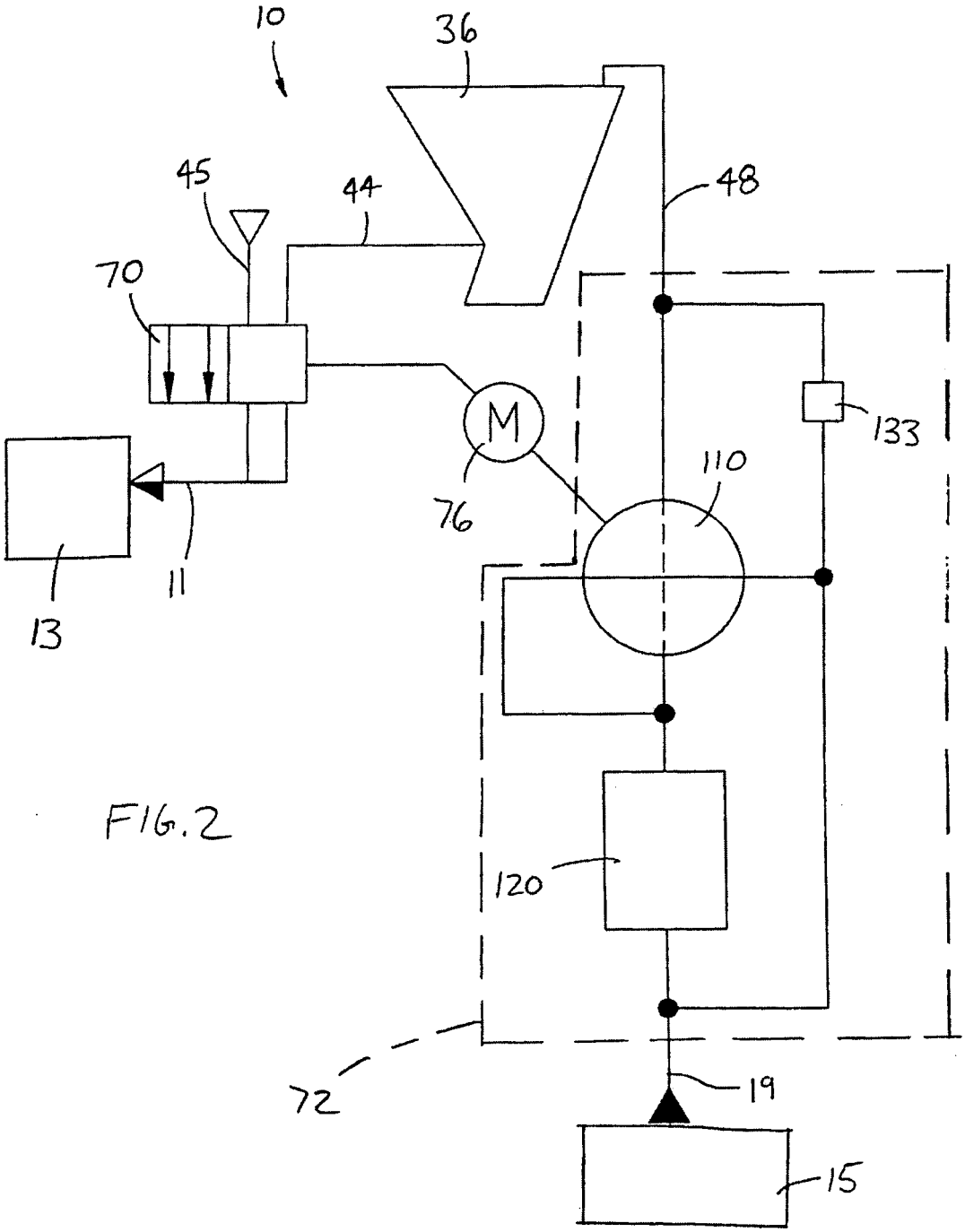

FIG. 2

FIG. 3

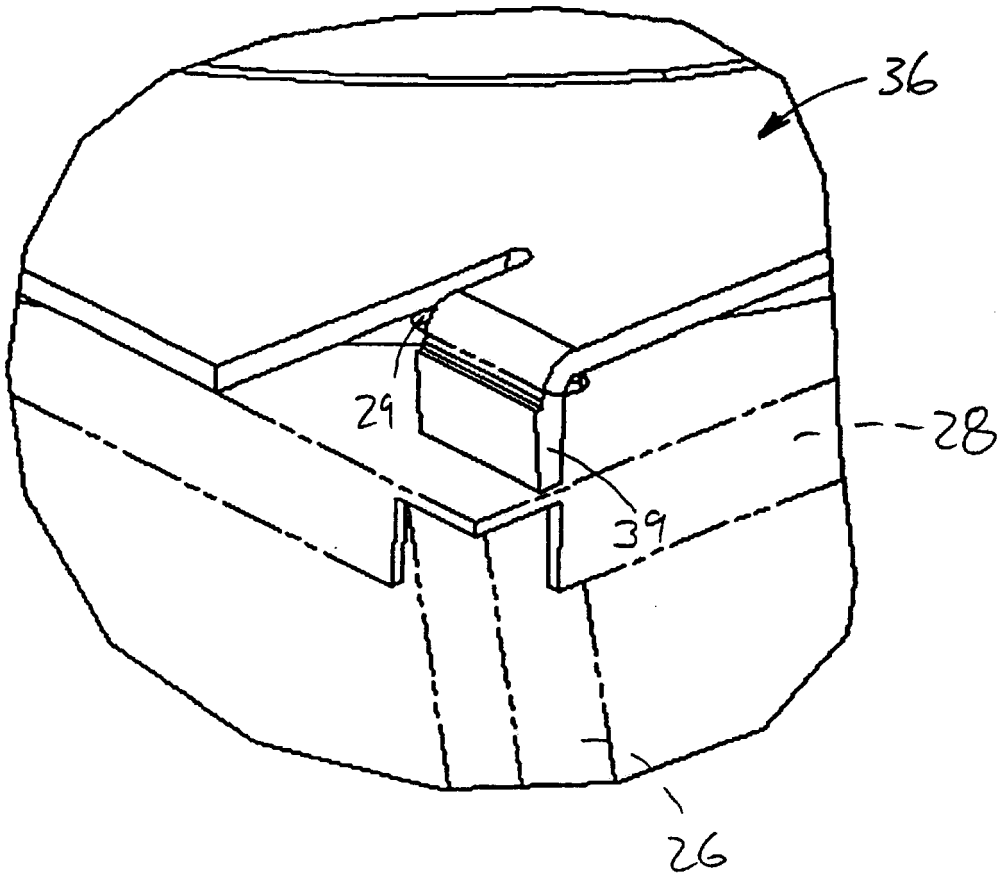

FIG. 4

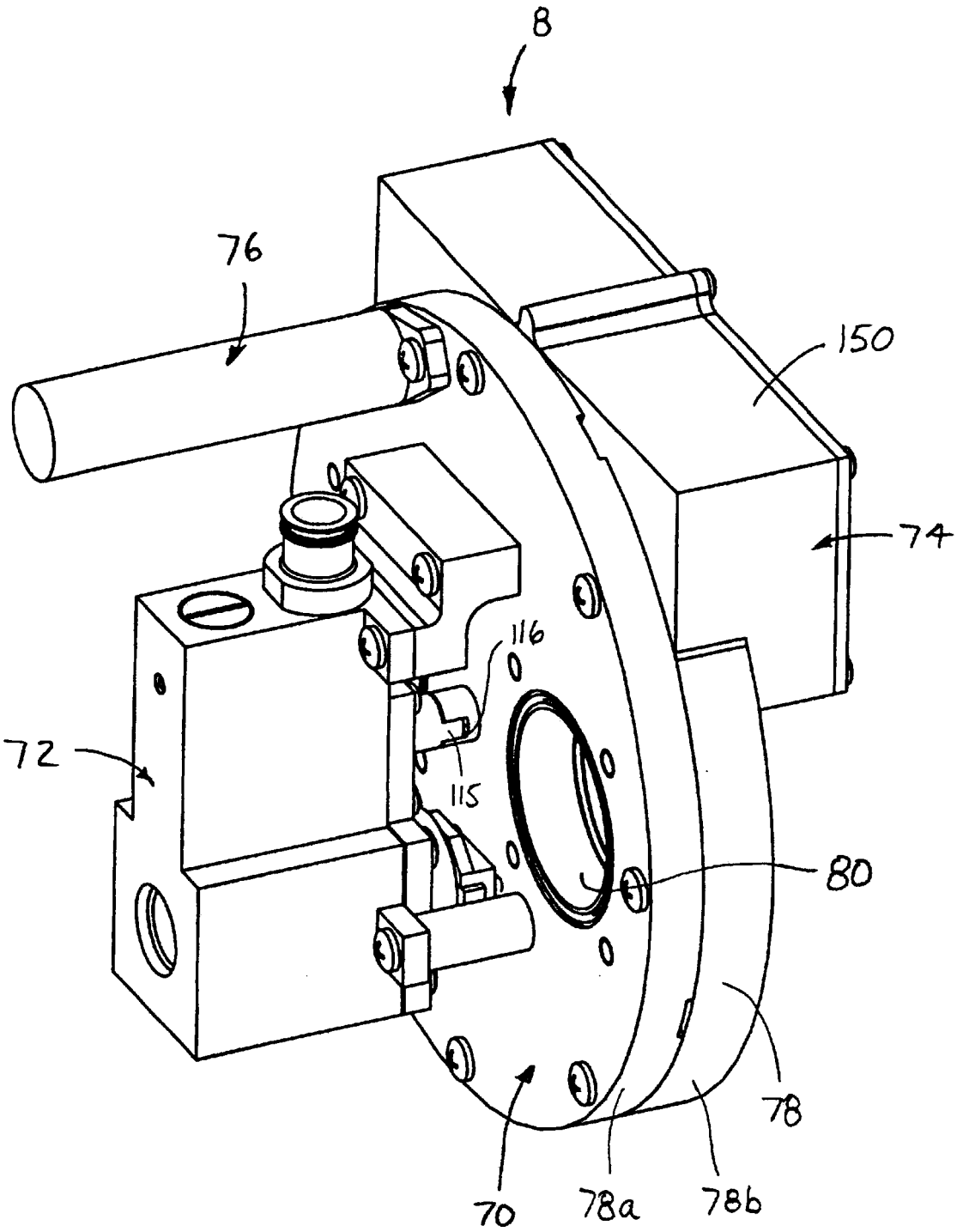

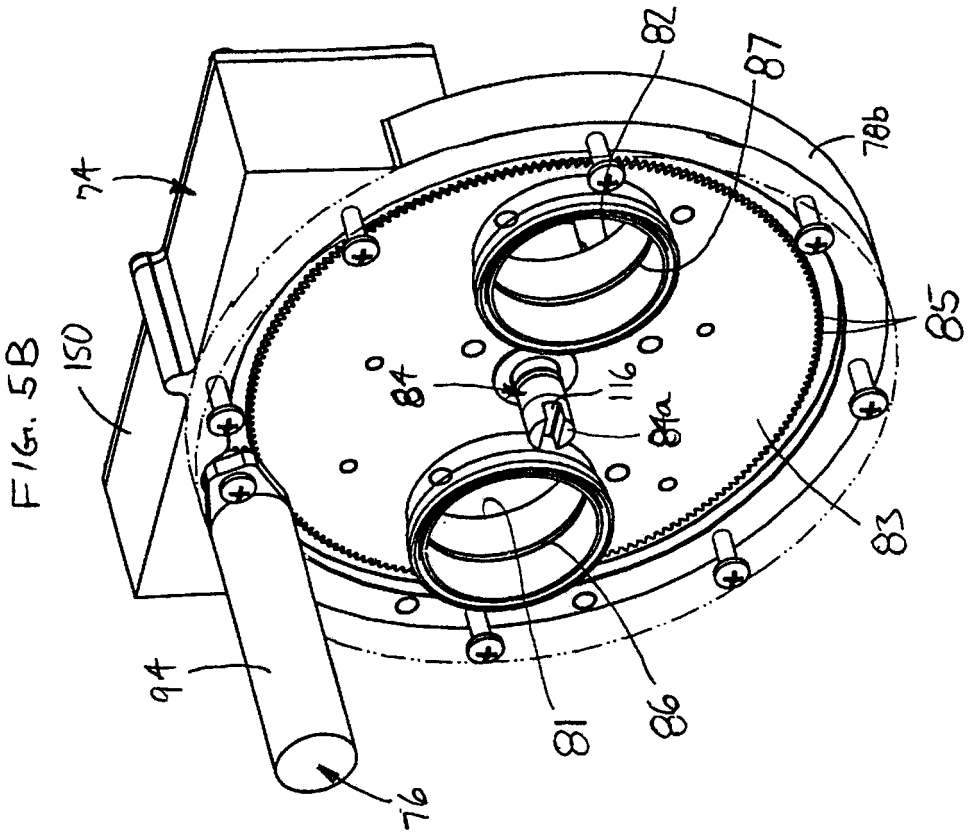
82
87
78b
74
85
150
84
116
84a
83
94
81
86
76

FIG. 5B

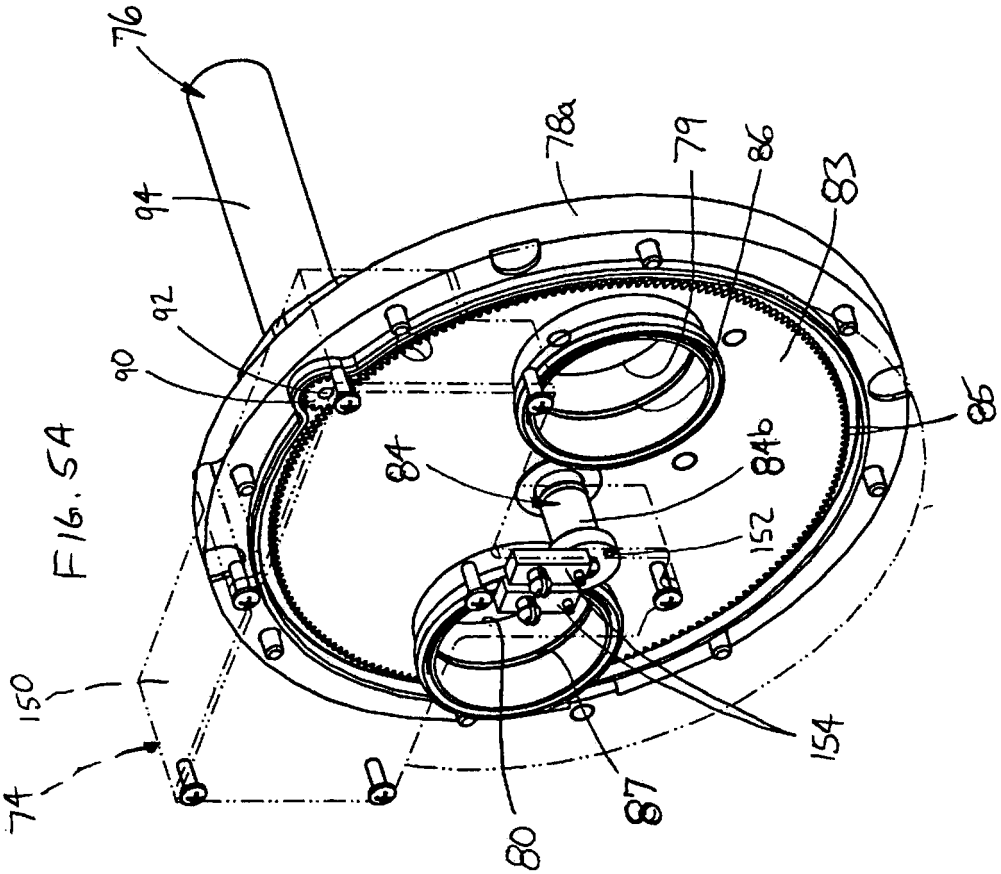
76
78a
79
86
83
94
92
90
86
84
84b
152
150
154
74
80
87

FIG. 5A

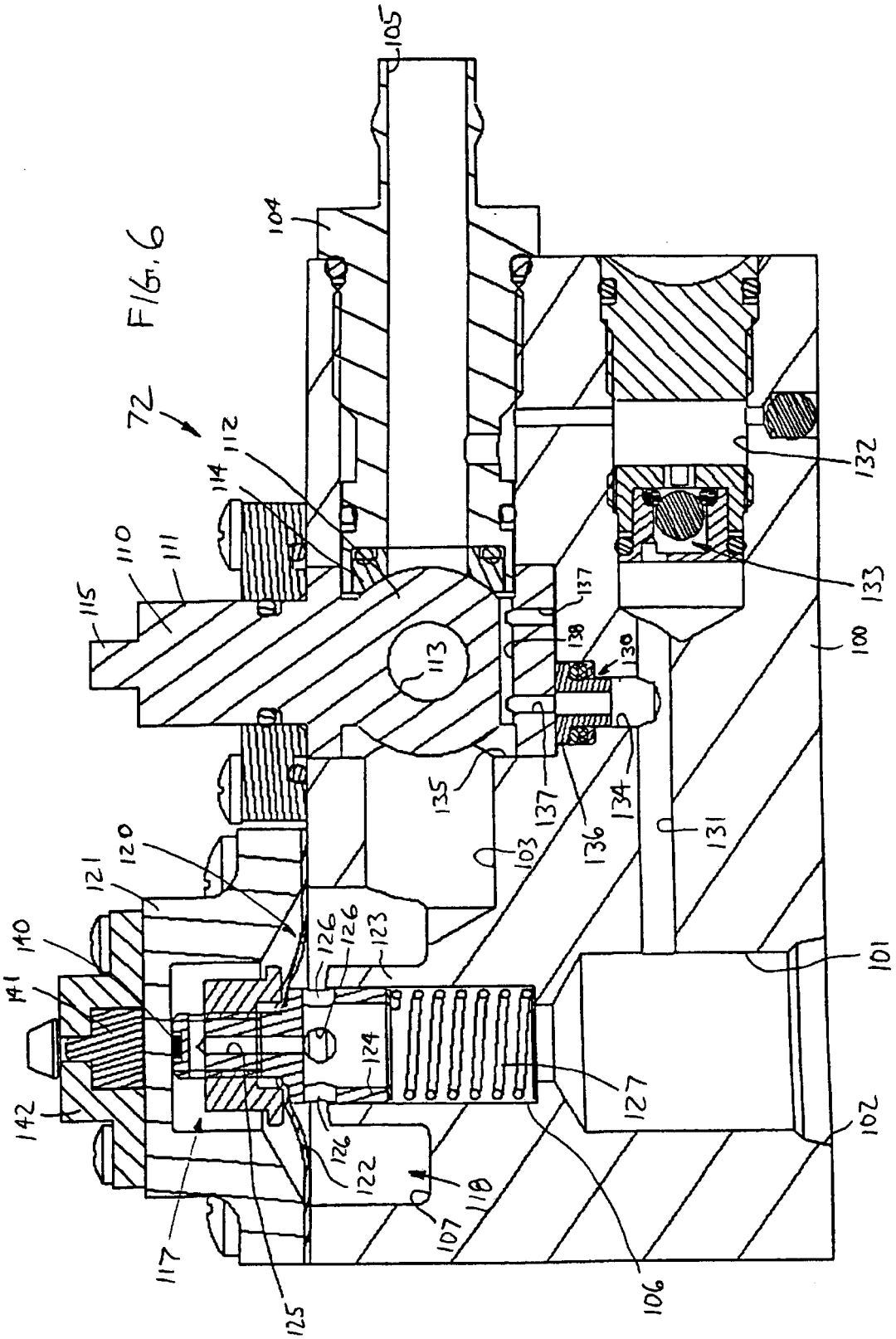
105
104
72
112
114
110
111
115
113
137
138
130
132
133
100
135
137
136
134
131
103
120
121
140
141
142
126
126
123
124
127
101
102
126
122
118
107
117
125
106

FIG. 6

FIG. 7A

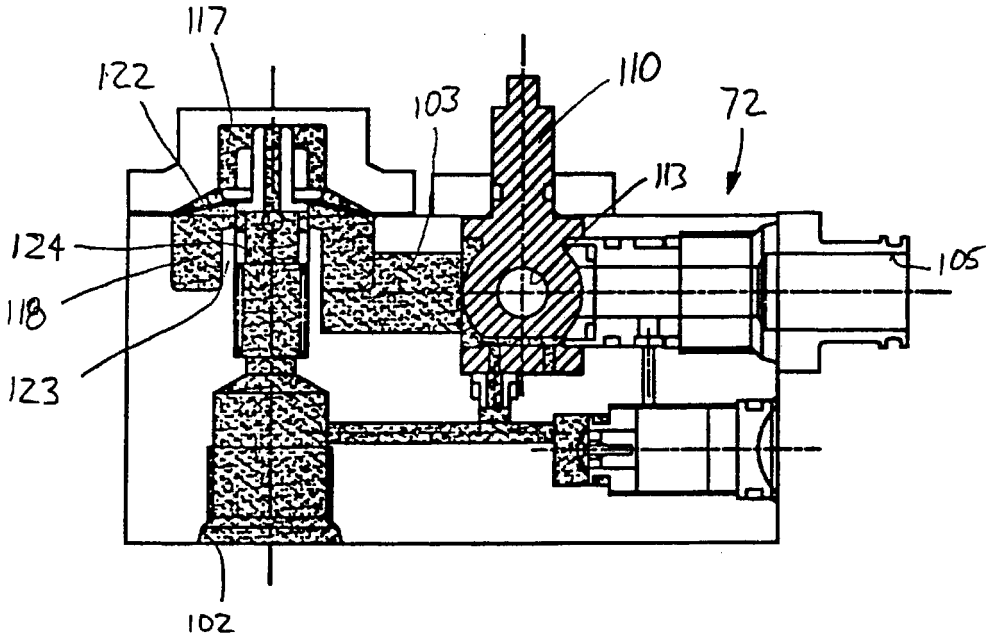
117
122
103
110
72
113
124
118
123
105
102

FIG. 7C

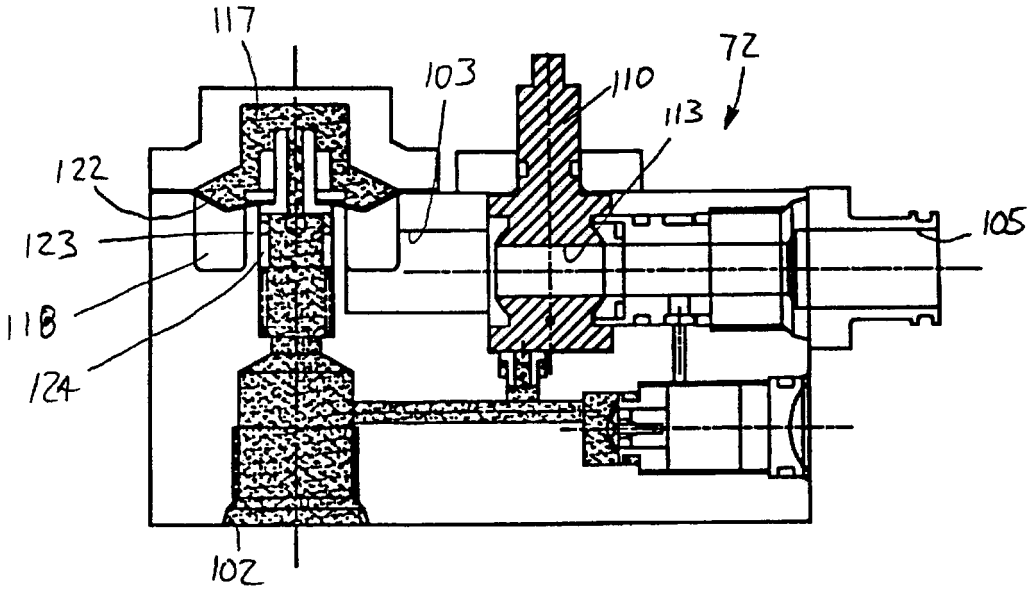
117
103
110
72
113
122
123
105
118
124
102

FIG. 7B

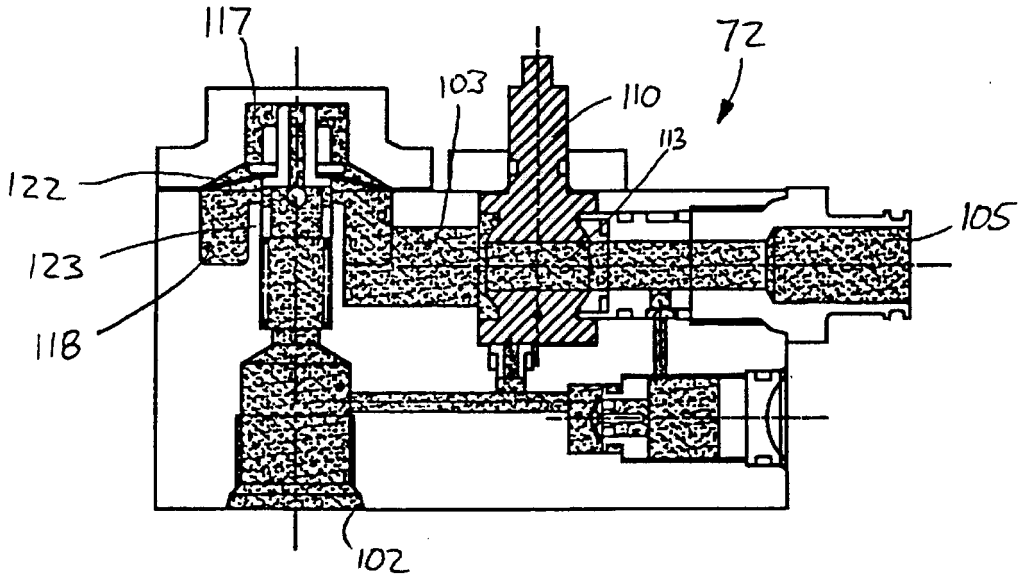
117
72
103
110
113
122
105
123
118
102

FIG. 7D

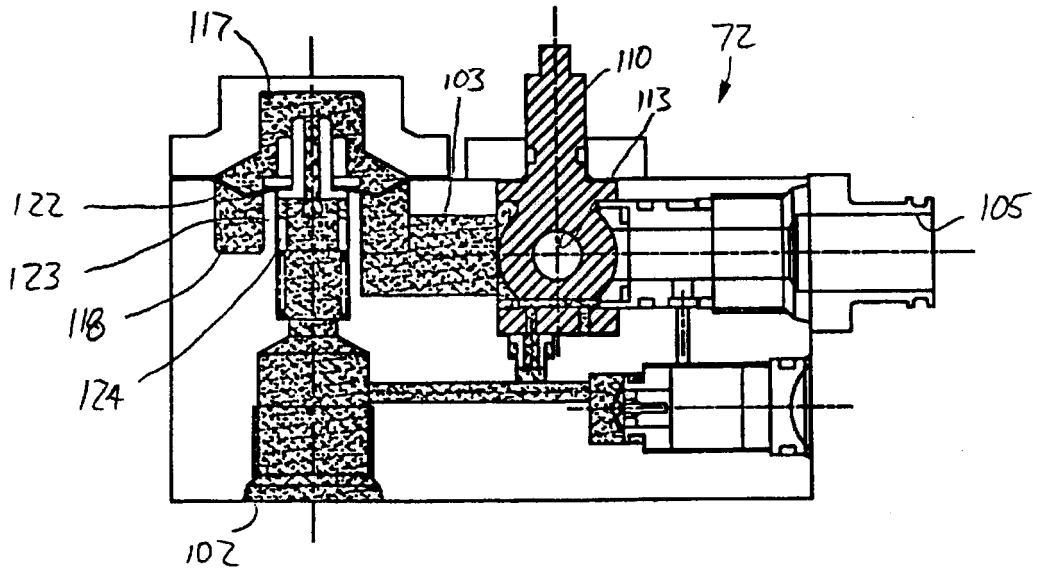
117
72
110
103
113
122
105
123
118
124
102

MODULAR VACUUM TOILET WITH LINE REPLACEABLE UNITS

This is a continuation of U.S. Application Ser. No. 09/713,892 filed Nov. 16, 2000 now U.S. Pat. No. 6,353,942.

FIELD OF THE INVENTION

The present invention generally relates to toilets and, more particularly, to vacuum toilet systems.

BACKGROUND OF THE INVENTION

Vacuum toilet systems are generally known in the art for use in both vehicle and stationary applications. A vacuum toilet system typically comprises a bowl for receiving waste having an outlet connected to a vacuum sewer line. A discharge valve is disposed between the bowl outlet and vacuum sewer line to selectively establish fluid communication therebetween. The vacuum sewer line is connected to a collection tank that is placed under partial vacuum pressure by a vacuum source, such as a vacuum blower. When the discharge valve is opened, material in the bowl is transported to the sewer pipe as a result of the pressure difference between the interior of the bowl and the interior of the sewer line. Conventional vacuum toilet systems also include a source of rinse fluid and a rinse fluid valve for controlling introduction of rinse fluid into the bowl.

The components of a conventional vacuum toilet are typically provided separately and are overly difficult to assemble. The discharge valve is typically mounted in a first position, while the rinse valve is mounted in a second, separate position. A flush control unit (FCU) is mounted remote from both valves and provides control signals to the discharge and rinse valve actuators. Accordingly, various mounting brackets, tubing, and wires are needed to interconnect the various components, making assembly overly complicated and time-consuming.

In addition, the separate components used in conventional vacuum toilets make repair and maintenance overly time consuming and labor intensive. Maintenance concerns are particularly significant in aircraft applications, in which a number of sub-systems are installed on board. According to general practice in the airline industry, each sub-system includes one or more components which must be replaced in the event of failure, such replacement components being commonly referred to as line replaceable units (LRUs). Presently, the entire vacuum toilet is defined as the LRU for the vacuum toilet system. As a result, an airline must stock one or more replacement toilets in the event of a toilet failure, so that the replacement toilet may be swapped in for the faulty toilet. A "bench test" is then performed on the faulty toilet to determine which components have failed in the toilet. The faulty components are then repaired or replaced (which may include significant disassembly and reassembly of the toilet) so that the toilet may be reused on another aircraft.

Each of the steps performed during a toilet repair is overly difficult and time consuming. To remove an entire toilet assembly from an aircraft requires disassembly of at least four self-locking mounting fasteners, an electrical connection, a grounding strap, a potable water line connection, and a waste discharge pipe connection. Each connection may be difficult to access, and may require a particular tool in order to loosen and disconnect. The same connections must then be reconnected for the replacement toilet.

Even if it were possible to remove and replace a single toilet component, it would be overly difficult and time consuming to do so. Removal of a component would require disconnection of several wires and pipes, and the components are often located in areas which are difficult to access. Furthermore, it would be difficult to diagnose whether one component or several components had failed. There exists a multitude of combinations of simultaneous component failures, which may lead to trouble-shooting errors and the replacement or repair of non-faulty components.

In view of the foregoing, it is apparent that the replacement and repair of conventional toilets is overly time consuming, and requires an airline to maintain a large stock of replacement toilets in the event of equipment failure.

Other repairs, which may not require substantial amounts of trouble shooting to identify the failed components, still require significant amounts of disassembly and reassembly. The toilet bowl, for example, is typically formed of stainless steel covered with a non-stick coating that is subject to failure. In conventional toilets, the bowl is a structural, load bearing component that is attached to a base support. In some toilets, the base support is permanently attached to the bowl and therefore the entire toilet must be removed to replace the coating. In other toilets, the bowl is removable from the support base, and therefore fasteners must be removed and the bowl must be disconnected from the rinse fluid and discharge lines. In addition, the rinse ring or nozzle used to direct rinse fluid into the bowl must be removed. Furthermore, if the non-stick coating fails, the bowl must be removed from all of the other toilet components for a re-coating process, steps of which are performed at high temperature to remove the old coating and apply a new coating to the toilet bowl surface. Accordingly, the replacement of a conventional bowl is overly complicated and time consuming.

From the foregoing, it will be appreciated that a number of toilets must be kept in stock for replacement in the event of a faulty toilet. The number of stock toilets is further increased due to the left-handed and right-handed discharge configurations of conventional vacuum toilets. Typically, the component layout of a conventional vacuum toilet must be modified according to the type of discharge configuration desired. In addition, different components maybe required, such as a toilet bowl with a left-handed or right-handed discharge. As a result, an airline must have both left- and right-handed discharge replacement toilets on hand, thereby increasing the number of stock parts required.

From the above, it will be appreciated that a need exists for a vacuum toilet that is easier to maintain and which reduces the number of stock parts required.

SUMMARY OF THE INVENTION

In accordance with certain aspects of the present invention, a modular vacuum toilet is provided for use in a vacuum toilet system having a sewer line placeable under partial vacuum pressure and a source of rinse fluid. The modular vacuum toilet comprises a support structure, and a removable bowl supported by the support structure, the bowl defining an outlet and having a rinse fluid dispenser associated therewith. A valve set module is provided having a discharge valve with an inlet in fluid communication with the bowl outlet, an outlet in fluid communication with the sewer line, and a movable discharge valve member disposed between the discharge valve inlet and outlet; a rinse fluid valve having an inlet in fluid communication with the source of rinse fluid, an outlet in fluid communication with the rinse

fluid dispenser, and a movable rinse fluid valve member disposed between the rinse fluid valve inlet and outlet; and a flush control unit having a circuit board operably connected to the discharge. valve and rinse fluid valve for controlling actuation of the discharge valve member and rinse fluid valve member.

In accordance with additional aspects of the present invention, a method of servicing a vacuum toilet is provided, in which the vacuum toilet is attached to a vacuum toilet system having a sewer line placeable under partial vacuum pressure and a source of rinse fluid, and in which the vacuum toilet includes a waste receptacle defining an outlet and having a rinse fluid dispenser associated therewith. The method comprises providing a first valve set module having a discharge valve with an inlet adapted to engage the receptacle outlet and an outlet adapted for releasable connection to the sewer line, a rinse fluid valve with an inlet adapted for releasable connection to the source of rinse fluid and an outlet adapted for releasable connection to the rinse fluid dispenser, and a flush control unit adapted to control operation of the discharge valve and rinse fluid valve. The discharge valve is detached from the bowl outlet, discharge valve outlet from the sewer line, the rinse fluid valve inlet from the rinse fluid source, and the rinse fluid valve outlet from the rinse fluid line, and the valve set module is removed from the vacuum toilet. A second valve set module is inserted into the vacuum toilet, the second valve set module including a discharge valve with an inlet adapted to engage the receptacle outlet and an outlet adapted for releasable connection to the sewer line, a rinse fluid valve with an inlet adapted for releasable connection to the source of rinse fluid and an outlet adapted for releasable connection to the rinse fluid dispenser, and a flush control unit adapted to control operation of the discharge valve and rinse fluid valve. The second valve set discharge valve inlet is then attached to the bowl outlet, the discharge valve outlet to the sewer line, the rinse fluid valve inlet to the rinse fluid source, and the rinse fluid valve outlet to the rinse fluid line.

In accordance with further aspects of the present invention, a method of servicing a vacuum toilet is provided wherein the toilet has a receptacle for receiving waste defining an outlet and includes a rinse fluid dispenser associated therewith. A discharge valve has an inlet in fluid communication with the receptacle outlet, an outlet in fluid communication with a sewer line placeable under partial vacuum pressure, and a moveable discharge valve member disposed between the discharge valve inlet and the discharge valve outlet. A rinse fluid valve has an inlet in fluid communication with a source of rinse fluid, an outlet in fluid communication with the rinse fluid dispenser, and a moveable rinse fluid valve member disposed between the rinse fluid valve inlet and the rinse fluid valve outlet. A flush control unit is adapted to control actuation of the discharge valve member and rinse fluid valve member, in which at least one of the discharge valve, rinse fluid valve, flush control unit, and waste receptacle is a line replaceable unit. The method comprises removing the faulty line replaceable unit from the toilet, and installing a new line replaceable unit into the toilet.

In accordance with still further aspects of the present invention, a valve set is provided for use in a vacuum toilet system having a sewer pipe placeable under partial vacuum pressure. The valve set comprises a discharge valve having an outlet, and an outlet pipe attached to the discharge valve outlet and defining a branch. A discharge pipe has a first end adapted to releasably engage the sewer pipe and a second end releasably attachable to the branch in at least a first position corresponding to a left-handed discharge configuration and a second position corresponding to a right-handed discharge configuration.

Other features and advantages are inherent in the apparatus claimed and disclosed or will become apparent to those skilled in the art from the following detailed description and its accompanying drawings.

BRIEF DESCRIPTION OF THE DRAWINGS

FIGS. **1A** and **1B** are front and rear perspective views, respectively, of a modular vacuum toilet in accordance with the present invention.

FIG. **2** is a schematic diagram of the vacuum toilet of FIG. **1**.

FIG. **3** is an enlarged view of a tab used to secure a bowl to the frame.

FIG. **4** is an enlarged perspective view of the valve set incorporated into the vacuum toilet of FIG. **1**.

FIGS. **5A** and **5B** are perspective views of a discharge valve and actuator incorporated into the valve set.

FIG. **6** is a side elevation view, in cross-section, of a rinse valve assembly incorporated into the valve set.

FIGS. **7A–D** are side elevation views, in cross-section, of the rinse valve assembly showing the various stages of a rinse cycle.

DETAILED DESCRIPTION OF THE PREFERRED EMBODIMENTS

Referring initially to FIGS. **1A**, **1B**, and **2**, a modular vacuum toilet suitable for use in a vehicle, in accordance with the present invention, is generally referred to with reference numeral **10**. The modular vacuum toilet **10** generally includes a valve set **8**, a frame **20**, and a bowl **36**. The vehicle is provided with a sewer line **11**, a vacuum tank **13** connected to the sewer line **11**, and a vacuum source (not shown) for placing the vacuum tank **13** under partial vacuum pressure. The vehicle further includes a source of rinse fluid **15** connected to a rinse fluid supply line **19**.

The frame **20** is provided for supporting the components of the vacuum toilet **10**. As best shown with reference to FIGS. **1A** and **1B**, the frame **20** includes a bottom member **24** adapted for attachment to a support surface of the vehicle. Vertical supports **26** extend upwardly from the bottom member **24**, and a top member **28** is attached to the vertical supports **26**. The top member **28** is formed with an opening **30** near the front and two slots **29** near the rear thereof. In the illustrated embodiment, an intermediate support **32** is attached between adjacent vertical supports **26**, and a bracket **27** is attached to the bottom member **24**. The bottom member **24**, top member **28**, and bracket **27** are preferably formed of sheet metal, while the vertical supports **26** and intermediate support **32** are preferably formed of tube steel, both of which are readily available and inexpensive. Other materials having sufficient rigidity, however, may also be used.

The bowl **36** is provided for receiving waste material. The bowl **36** has a curved sidewall **38** and an out-turned flange **40** extending about an upper edge of the sidewall (FIGS. **1A** and **1B**). The out-turned flange **40** further includes tabs **39** sized for insertion through the slots **29** formed in the frame top member **28**, as best shown in FIG. **3**. A bottom of the sidewall is formed in an outlet **42**, and the sidewall **38** is sized for insertion into the opening **30** of the frame top member **28**. The outlet **42** fluidly communicates with a discharge valve **70** through a transfer pipe **44**. The transfer

pipe **44** preferably includes a collar **47** sized to frictionally engage and seal with the outlet **42**.

To attach the bowl **36** to the frame **20**, the bowl **36** is inserted through the opening **30** and positioned so that the tabs **39** are aligned with the slots **29** and the outlet **42** is aligned with the collar **47**. The bowl **36** is lowered so that the tabs **39** pass through and lock with the slots **29**. Simultaneously, the outlet **42** is inserted into and engages the collar **47**. In this position, the out-turned flange **40** closely overlies the frame top member **28** so that downward forces applied to the bowl **36** are transferred to the frame **20**. As a result, the bowl **36** is not a load-bearing component, and may be made of non-structural materials such as plastic, thin-walled metal (defined herein as less than approximately 0.040" thick), or other known alternatives. In addition, the bowl **36** is separable from the frame **20** and therefore may be replaced independently from the rest of the toilet **10**. Still further, the tabs **39** may be manipulated manually, and therefore no tools are required to install or remove the bowl **36**.

At least one rinse fluid dispenser, such as nozzles **46**, is provided inside the bowl **36** for directing rinse fluid over the surface of the bowl. As best shown in FIGS. **1A** and **1B**, a plurality of nozzles **46** are spaced about the bowl sidewall **38** and are oriented to direct rinse fluid over portions of the bowl surface. The number of nozzles may be more or less than that shown, depending on the size of the bowl surface to be rinsed. As used herein, the phrase "rinse fluid dispenser" includes the illustrated nozzles **46**, as well as known substitutes, such as spray rings.

A vacuum breaker **33** is positioned above the top edge of the bowl **36**, and a first rinse fluid pipe **35***a* extends from the nozzles **46** to the vacuum breaker **33**. A second rinse fluid pipe **35***b* extends from the vacuum breaker **33** to a rinse valve **72**. Quick-disconnect couplings **108***a*, **108***b* are provided to connect the first and second rinse fluid pipes **35***a*, **35***b* to the vacuum breaker **33**.

The separate frame **20** advantageously allows the bowl **36** to be a line replaceable unit (LRU). When the bowl **36** becomes worn or otherwise needs replacement, a maintenance person may simply disconnect the first rinse fluid pipe **35***a* using the quick disconnect coupling **108***a*, manipulate the tabs **39** so that the are disengaged from the slots **29**, and pull upward on the bowl **36** to remove the bowl **36** from the frame **20**. A new bowl **36** may then be inserted into the frame **20** as described above, and the first rinse fluid pipe **35***a* maybe connected to the vacuum breaker **33** using the quick-disconnect coupling **108***a*. As a result, the entire toilet need not be removed and serviced. In addition to facilitating bowl removal and replacement, the frame **20** allows a wider range of materials to be used for the bowl **36**, since the frame **20**, rather than the bowl **36**, supports the load.

As best shown in FIG. **1A**, the valve set **8** is mounted to the frame bracket **27**. The valve set **8** is preferably attached to the bracket **27** using fasteners that may be manipulated by hand, such as knurled screws **37**. The valve set **8** includes four sub-components: a discharge valve **70**, a rinse valve **72**, a flush control unit (FCU) **74**, and an actuator **76** (FIG. **4**). The discharge valve **70** includes a discharge valve housing **78** divided into two halves **78***a*, **78***b*. As best shown in FIGS. **5A** and **5B**, the housing **78** includes a pair of inlets **79**, **80** formed in the housing half **78***a* aligned with a pair of outlets **81**, **82** formed in the housing half **78***b*.

The housing **78** further defines a chamber for receiving a discharge valve member, such as valve disk **83**. An axle **84** is attached to the valve disk **83** has two ends **84***a*, **84***b*. Holes are formed in the housing halves **78***a*, **78***b*, sized to receive the axle ends **84***a*, **84***b*, respectively, so that the disk **83** is supported for rotation about the axle **84**. The periphery of the disk **83** is formed with gear teeth **85**, and a pair of apertures **86**, **87** are formed through the disk **83**. The apertures **86**, **87** are spaced so that both register simultaneously with the associated inlet/outlet pairs **79/81**, **80/82** as the disk **83** rotates. In the illustrated embodiment, the apertures **86**, **87** and associated inlet/outlet pairs **79/81**, **80/82** are spaced 180 degrees apart.

According to the illustrated embodiment, the inlet **79** is connected to one end of the transfer pipe **44**, with the other end of the transfer pipe **44** being attached to the bowl outlet **42**. An air intake check valve **45** is attached to the other inlet **80**, and is oriented to allow fluid to flow into the inlet **80** while preventing fluid from discharging out of the check valve **45** (FIGS. **1A** and **2**). A U-shaped outlet pipe **12** (FIG. **1B**) has a first end connected to the outlet **81** and a second end connected to the outlet **82**. The outlet pipe **12** further has a branch **17** leading to a discharge pipe **21**.

In accordance with certain aspects of the present invention, the branch **17** and discharge pipe **21** are adapted to provide both right- and left-handed discharge configurations. As best shown in FIG. **1B**, the branch **17** includes a pair of spaced pins **160** (only one shown in FIG. **1B**) and the discharge pipe **21** a pair of spaced J-shaped slots **162** (only one shown in FIG. **1B**) positioned to engage the pins, so that the discharge pipe **21** is removably attached to the branch **17**. The pins **160** and J-shaped slots **162** are preferably spaced 180 degrees apart, so that the discharge pipe **21** maybe positioned for either right- or left-handed discharge simply by rotating the discharge pipe **21** before attachment, without requiring changes to the other toilet components. The free end of the discharge pipe **21** is adapted for releasable connection to the sewer line **11**, such as with a clam shell coupling (not shown).

In operation, when the disk apertures **86**, **87** are aligned with the inlet/outlet pairs **79/81**, **80/82**, the discharge valve **70** not only transfers waste from the transfer pipe **44** to the sewer line **11**, but also pulls additional air into the sewer line **11** through the air intake check valve **45**. The additional air intake reduces noise that is normally generated during a flush.

The actuator **76** is provided for driving the valve disk **83**. As best shown in FIG. **5A**, the actuator **76** includes a spur gear **90** enmeshed with the gear teeth **85** formed about the periphery of the disk **83**. The spur gear **90** is mounted to a rotatable shaft **92**, and a drive is provided for rotating the shaft **92**. The FCU **74** is operably coupled to the actuator **76** to control operation of the actuator. According to the illustrated embodiment, the disk **83** may be rotated in a single direction by ninety degree increments to open and close the discharge valve **70**. Alternatively, the disk **83** may also be reciprocated back and forth across a ninety degree arc to open and close the valve **70**, or the disk **83** may be controlled in other manners according to other disk designs and layouts.

The rinse valve **72** is provided for controlling flow of rinse fluid to the bowl **36**. As best shown in FIG. **6**, the rinse valve **72** comprises a housing block **100** formed with an inlet bore **101**, defining an inlet **102**, and an outlet bore **103**. The inlet bore **102** is adapted for connection to the rinse fluid line **19** via a quick-disconnect coupling (not shown). An insert **104** is positioned in a downstream portion of the outlet bore **103** and defines an outlet **105**. The outlet end of the insert **104** is barbed to secure one end of the second rinse fluid pipe **35***b*

thereto, while the opposite end of the second rinse fluid pipe **35***b* has the quick-disconnect coupling **108***b* (FIGS. **1**A and **1**B). A poppet valve bore **106** is also formed in the housing block **100**, and fluidly communicates with the inlet bore **101**. An annular recess **107** is formed in the housing block **100** concentric with the poppet valve bore **106** to establish fluid communication between the poppet valve bore **106** and the outlet bore **103**.

The rinse valve **72** includes a rinse valve member, such as a ball valve **110**, which is disposed in the outlet bore **103** for selectively establishing fluid communication between the outlet bore **103** and the outlet **105**. The ball valve **110** includes a shaft **111** and a valve member **112** having a flow passage **113** extending therethrough. A seal **114** is provided downstream of the valve member **112** for preventing leakage between the valve member **112** and the downstream portion of the outlet bore **103**. As shown in FIG. **6**, the flow passage **113** is perpendicular to the outlet bore **103**, thereby preventing fluid flow. The ball valve **110** is rotatable, however, to align the flow passage **113** with the outlet bore **103**, thereby establishing fluid communication between the upstream portion of the outlet bore **103** and outlet **105**.

In the preferred embodiment, the top of the shaft **111** is adapted to mechanically engage the axle end **84***a*, as best shown in FIG. **4**, so that rotation of the disk **83** also rotates the ball valve **110**. In the illustrated embodiment, the shaft **111** is formed with a key **115**, while the axle end **84***a* has a slot **116** sized to receive the key **115**. As a result, a separate actuator is not required to actuate the ball valve **110**, thereby reducing cost and space requirements for the toilet.

The rinse valve **72** further includes a fuse valve **120** for metering rinse fluid flow through the rinse valve when the ball valve **110** is open. As used herein, the phrase "fuse valve" indicates a valve that actuates after a set value of fluid has passed therethrough. As best shown in FIG. **6**, a bonnet **121** is attached to the housing block **100** to close off the poppet valve bore **106** and the recess **107**. A flexible diaphragm **122** is attached between the housing block **100** and the bonnet **121** to define a pilot chamber **117** above the diaphragm **122** and a flow chamber **118** below the diaphragm **122**. As illustrated at FIG. **6**, the diaphragm **122** is in a closed position, in which the diaphragm **122** engages an annular intermediate wall **123** extending between the poppet valve bore **106** and recess **107**, thereby closing off fluid communication between the poppet valve bore **106** and recess **107**. A poppet valve **124** is disposed inside the poppet valve bore **106** and is attached to the diaphragm **122**, so that the poppet valve **124** moves with the diaphragm **122**. The top of the poppet valve **124** is formed with a pilot port **125**, and flow ports **126** extend radially through a sidewall of the poppet valve **124**. A spring **127** is disposed in the poppet valve port for biasing the diaphragm **122** away from the intermediate wall **123** toward an open position, in which fluid communication is established between the poppet valve bore **106** and the recess **107**.

The fuse valve **120** limits the amount of rinse fluid allowed to flow through the rinse valve **72** when the ball valve **110** is open. During operation, the ball valve **110** is normally in a closed position to prevent flow of rinse fluid through the rinse valve **72**. The rinse fluid flows through both the pilot port **125** to register at the pilot chamber **117**, and through the flow ports **126** to register in the flow chamber **118**. Because there is no rinse fluid flow, the rinse fluid pressure is the same in both the pilot chamber **117** and the flow chamber **118**, so that the spring **127** urges the diaphragm **122** and poppet valve **124** to the open position, as shown in FIG. **7**A.

In response to a flush command, the ball valve **110** is rotated to the open position so that the ball valve flow passage **113** communicates the outlet bore **103** to the outlet **105**, thereby creating fluid flow through the valve **72** (FIG. **7**B). During fluid flow, the rinse fluid experiences a pressure drop as it passes through the flow ports **126**, thereby reducing the fluid pressure in the flow chamber **118** while the pressure in the pilot chamber **117** stays substantially the same. The resulting pressure differential across the diaphragm **122** ultimately overcomes the force of the spring **127** so that the diaphragm **122** and poppet valve **124** move to the closed position, as shown in FIG. **7**C. When the diaphragm is in the closed position, fluid flow through the rinse valve **72** is again cut off, this time by the engagement of the diaphragm **122** with the intermediate wall **123**. Because of the fuse valve **120**, the volume of rinse fluid passing through the open ball valve **110** is substantially constant from flush to flush, regardless of the rinse fluid pressure supplied to the rinse valve **72**. It will also be appreciated that the fuse valve **120** provides a redundant shut-off, so that the ball valve **110** or the fuse valve **120** may be used to stop rinse fluid flow should the other fail.

The rinse valve **72** further includes a face valve **130** for returning the diaphragm **122** back to the open position after the ball valve **110** is subsequently closed. Referring to FIG. **6**, a bypass bore **131** is formed in the housing block **100** that connects the inlet bore **101** to an auxiliary bore **132**. A reset bore **134** intersects the bypass bore **131** and communicates with a ball valve bore **135** formed in the housing block **100**. A reset insert **136** is inserted in the reset bore **134** and has a top surface adapted to engage a bottom of the ball valve **110**. The ball valve **110** is formed with reset passages **137** extending into the ball valve **110** to a transverse passage **138** extending entirely through the ball valve **110**. The reset passages **137** are located on the ball valve **110** so that they align with the reset insert **136** only when the ball valve **110** is in the closed position. The seal **114** prevents rinse fluid from leaking from the transverse passage **138** to the outlet **105**. No seal is provided upstream of the ball valve **110** so that, when one of the reset passages **137** is aligned with the insert **136**, fluid communication is established from the inlet bore **101**, through the bypass and reset bores **131**, **134** and one of the reset passages **137** to the flow chamber **118**.

According to the illustrated embodiment, the rinse valve **72** also includes a drain valve **133** disposed in the auxiliary bore **132** to provide freeze protection, as is well known in the art.

In operation, the diaphragm **122** moves to the closed position while the ball valve **110** is open, thereby stopping rinse fluid flow through the rinse valve **72** (FIG. **7**C). With the ball valve **110** in the open position, neither reset passage **137** is aligned with the reset insert **136**. The ball valve **110** is subsequently closed, thereby aligning one of the reset passages **137** with the insert **136** and establishing fluid communication from the inlet bore **101** to the flow chamber **118** (FIG. **7**D). The incoming rinse fluid pressure registers at the flow chamber **118**, so that the flow chamber reaches the same pressure as the pilot chamber **117**. With the differential pressure across the diaphragm **121** removed, the spring **127** is again allowed to urge the diaphragm **121** to the open position, thereby resetting the fuse valve **120** to the position shown in FIG. **7**A.

In the preferred embodiment, a position sensor is used to provide feedback regarding poppet valve position feedback. In the illustrated embodiment, a magnet **140** is attached to the poppet valve **124**, and a hall effect switch **141** is located outside of the bonnet **121** in a switch enclosure **142** attached

to the bonnet **121** (FIG. **6**). The hall effect switch **141** provides a signal that varies according to the position of the magnet **140** to indicate the position of the poppet valve **124**. The poppet valve position signal may be used for diagnostic purposes such as fault detection by comparing the position signal to the position of the disk **83** or ball valve **110**.

The FCU **74** comprises a housing **150** attached to the discharge valve housing half **78***b* opposite the rinse valve **72** (FIG. **4**). The housing **150** encloses one or more circuit boards (not shown) for controlling operation of the toilet **10**. In addition to the typical inputs and outputs, the FCU **74** also receives feedback from the poppet valve position sensor **141**.

The FCU housing **150** further houses a position sensor for determining the position of the disk **83**. As best shown in FIG. **5**A, magnets **152** are attached to the axle end **84***b* of the disk **83**. The axle end **84***b* extends into the FCU housing **150**, so that the magnets **152** are positioned proximal the control board. Hall effect switches **154** are provided directly on the circuit board for sensing the magnets **152** and thus determining the rotational position of the disk **83**. In the illustrated embodiment, a pair of magnets **152** are attached to the axle end **84***b*, and a pair of hall effect switches **154** are attached to the circuit board. The switches **154** actuate between on and off positions depending on the proximity of the magnets, thereby indicating the position of the disk **83**. As a result, the position of the disk **83** is directly sensed rather than inferring disk position based on actuator position. In addition, the switches **154** are located inside the FCU housing **150** and are therefore isolated from contamination due to lubrication or other material.

With the above construction, the valve set **8** is quickly and easily removed and replaced. To remove the valve set **8**, the discharge pipe **21** is disconnected from the sewer line **11**, the rinse valve inlet **102** is disconnected from the rinse supply line **19**, and the quick-disconnect coupling **108***b* of the second rinse fluid pipe **35***b* is disconnected from the vacuum breaker **33**. The knurled screws **37** are then removed from the bracket **27** and the valve set **8** with attached transfer pipe **44** is lowered so that the transfer pipe disengages the bowl outlet **42**. Thus the valve set **8** is removed with the transfer pipe **44**, outlet pipe **12**, discharge pipe **21**, and second rinse pipe **35***b*. A new valve set **8**, also having a new transfer pipe **44**, outlet pipe **12**, discharge pipe **21**, and second rinse pipe **35***b* may then be attached to the bracket **27** and reconnected.

From the foregoing, it will be appreciated that the valve set **8** of the present invention incorporates all of the valve and control apparatus. The rinse valve **72**, FCU **74**, and actuator **76** are all mounted to the discharge valve **70** to create an LRU, wherein a single module may be targeted for maintenance in the event of a valve or control failure. The wiring between the components may remain in place so that, in the event of a valve or control failure, only the piping connections between the valve set **8** and the drain, sewer, and rinse water piping need be undone to remove the valve set **8**.

Maintenance of the modular vacuum toilet **10** is entirely different from that of conventional vacuum toilets. Instead of defining the entire toilet as an LRU, the toilet **10** defines individual components or groups of components as LRUs. The bowl **36** may be independently removed from the toilet **10** and replaced. Similarly, the valve set **8** may be separately removed from the toilet **10**. Furthermore, the individual components may be quickly removed with the use of few or no tools.

The branch **17** and discharge pipe **21** of the valve set **8** are adapted to provide both right- and left-handed discharge configurations without additional modifications to the other toilet components, thereby further reducing the number of parts needed in stock.

The foregoing detailed description has been given for clearness of understanding only, and no unnecessary limitations should be understood therefrom, as modifications would be obvious to those skilled in the art.

What is claimed is:

1. A modular vacuum toilet for use in a vacuum toilet system having a sewer line placeable under partial vacuum pressure and a source of rinse fluid, the modular vacuum toilet comprising:

a support structure;

a removable bowl supported by the support structure, the bowl defining an outlet and having a rinse fluid dispenser associated therewith, the bowl defining a first line replaceable unit;

a valve set module defining a second line replaceable unit, the valve set module including:

a discharge valve having an inlet in fluid communication with the bowl outlet, an outlet in fluid communication with the sewer line, and a movable discharge valve member disposed between the discharge valve inlet and outlet;

a rinse fluid valve having an inlet in fluid communication with the source of rinse fluid, an outlet in fluid communication with the rinse fluid dispenser, and a movable rinse fluid valve member disposed between the rinse fluid valve inlet and outlet; and

a flush control unit having a circuit board operably connected to the discharge valve and rinse fluid valve for controlling actuation of the discharge valve member and rinse fluid valve member;

wherein the first line replaceable unit is independently replaceable from the toilet and the second line replaceable unit; and

wherein the second line replaceable unit is independently replaceable from the toilet and the first line replaceable unit.

2. The modular vacuum toilet of claim **1**, in which the support structure comprises a frame.

3. The modular vacuum toilet of claim **2**, in which the frame defines an opening, and in which the bowl includes a sidewall sized for insertion into the opening.

4. The modular vacuum toilet of claim **1**, in which the support structure includes slots, and in which the bowl includes tabs adapted to lockingly engage the slots, thereby to secure the bowl in place.

5. The modular vacuum toilet of claim **4**, in which the tabs are manually releasable to disengage from the slots.

6. The modular vacuum toilet of claim **1**, in which a rinse fluid pipe communicates between the rinse fluid valve outlet and the rinse fluid dispenser, wherein the rinse fluid pipe is releasably attached to the rinse fluid valve outlet with a coupling.

7. The modular vacuum toilet of claim **6**, in which the coupling is manually releasable.

8. The modular vacuum toilet of claim **1**, in which a transfer pipe has a first end connected to the discharge valve inlet, and a second end adapted to releasably engage the bowl outlet.

9. The modular vacuum toilet of claim **8**, in which the second end of the transfer pipe includes a collar sized to releasably engage and seal with the bowl outlet.

10. The modular vacuum toilet of claim **1**, in which a rinse fluid line communicates between the rinse fluid valve inlet

and the source of rinse fluid, wherein the rinse fluid valve inlet is releasably connected to the rinse fluid line with a coupling.

11. The modular vacuum toilet of claim **10**, in which the coupling is manually releasable.

12. The modular vacuum toilet of claim **1**, in which a discharge pipe communicates between the discharge valve outlet and the sewer line, wherein the discharge pipe is adapted for releasable connection to the sewer line.

13. The modular vacuum toilet of claim **1**, in which the support structure includes a bracket, and in which fasteners are provided for releasably securing the valve set module to the bracket.

14. The modular vacuum toilet of claim **13**, in which the fasteners comprise knurled screws.

15. A method of servicing a modular vacuum toilet in which the toilet has a first line replaceable unit including a waste receptacle for receiving waste and being supported by a support structure, the waste receptacle defining an outlet and having a rinse fluid dispenser associated therewith; the toilet further including a discharge valve having an inlet in fluid communication with the receptacle outlet, an outlet in fluid communication with a sewer line placeable under partial vacuum pressure, and a moveable discharge valve member disposed between the discharge valve inlet and the discharge valve outlet; a rinse fluid valve having an inlet in fluid communication with a source of rinse fluid, an outlet in fluid communication with the rinse fluid dispenser, and a moveable rinse fluid valve member disposed between the rinse fluid valve inlet and the rinse fluid valve outlet; and a flush control unit adapted to control actuation of the discharge valve member and rinse fluid valve member; in which at least two of the discharge valve, rinse fluid valve, and flush control unit are provided as a valve set forming a second line replaceable unit, the method comprising:

replacing the first line replaceable unit with a new first line replaceable unit independently of the toilet and the second line replaceable unit or the second line replaceable unit with a new second line replaceable unit independently of the toilet and the first line replaceable unit.

16. The method of claim **15**, in which the vacuum toilet comprises a stationary support structure, and in which the waste receptacle is adapted to releasably engage the support structure.

17. The method of claim **16**, in which the support structure includes slots, and in which the waste receptacle includes tabs adapted to lockingly engage the slots, thereby to secure the waste receptacle in place.

18. The method of claim **17**, in which the tabs are manually releasable to disengage from the slots.

19. The method of claim **15**, in which the discharge valve, rinse fluid valve, and flush control unit are integrally provided in a valve set, and in which the valve set forms the second line replaceable unit.

20. The method of claim **15**, in which a rinse fluid pipe communicates between the rinse fluid valve outlet and the rinse fluid dispenser, wherein the rinse fluid pipe is releasably attached to the rinse fluid dispenser with a coupling.

21. The method of claim **20**, in which the coupling is manually releasable.

22. The method of claim **15**, in which a transfer pipe has a first end connected to the discharge valve inlet, and a second end adapted to releasably engage the waste receptacle outlet.

23. The method of claim **22**, in which the second end of the transfer pipe includes a collar sized to releasably engage and seal with the waste receptacle outlet.

24. The method of claim **15**, in which a rinse fluid line communicates between the rinse fluid valve inlet and the source of rinse fluid, wherein the rinse fluid valve inlet is releasably connected to the rinse fluid line with a coupling.

25. The method of claim **24**, in which the coupling is manually releasable.

26. The method of claim **15**, in which a discharge pipe communicates between the discharge valve outlet and the sewer line, wherein the discharge pipe is adapted for releasable connection to the sewer line.

27. The method of claim **15**, in which the vacuum toilet includes a support structure having a bracket, and in which fasteners are provided for releasably securing the valve set to the bracket.

28. The method of claim **27**, in which the fasteners comprise knurled screws.

* * * * *

Kilpatrick Townsend & Stockton LLP
Emil W. Herich (SBN 116783)
9720 Wilshire Blvd.
Los Angeles, California 90212
Telephone: (310) 777-3730
Facsimile: (310) 388-5364

ORIGINAL

UNITED STATES DISTRICT COURT
CENTRAL DISTRICT OF CALIFORNIA

MAG Aerospace Industries, Inc., a Delaware Corporation PLAINTIFF(S) v. B/E Aerospace, Inc., a Florida Corporation DEFENDANT(S).	CASE NUMBER CV13-06089 JFW(FFMx) **SUMMONS**

TO: DEFENDANT(S):

A lawsuit has been filed against you.

Within 21 days after service of this summons on you (not counting the day you received it), you must serve on the plaintiff an answer to the attached ☑ complaint ☐ _____ amended complaint ☐ counterclaim ☐ cross-claim or a motion under Rule 12 of the Federal Rules of Civil Procedure. The answer or motion must be served on the plaintiff's attorney, Emil W. Herich, whose address is Kilpatrick Townsend & Stockton LLP, 9720 Wilshire Blvd., Los Angeles, CA 90212. If you fail to do so, judgment by default will be entered against you for the relief demanded in the complaint. You also must file your answer or motion with the court.

Clerk, U.S. District Court

Dated: AUG 20 2013

By: _____
Deputy Clerk

(Seal of the Court)

[Use 60 days if the defendant is the United States or a United States agency, or is an officer or employee of the United States. Allowed 60 days by Rule 12(a)(3)].

COPY

CIVIL COVER SHEET

I. (a) PLAINTIFFS (Check box if you are representing yourself ☐)

MAG Aerospace Industries, Inc., a Delaware Corporation

DEFENDANTS (Check box if you are representing yourself ☐)

B/E Aerospace, Inc., a Florida Corporation

(b) Attorneys (Firm Name, Address and Telephone Number. If you are representing yourself, provide same.)

Kilpatrick Townsend & Stockton LLP
Emil W. Herich, Steven D. Moore, Erwin L. Cena
9720 Wilshire Blvd., Los Angeles, CA 90212
Telephone: (310) 777-3730

(b) Attorneys (Firm Name, Address and Telephone Number. If you are representing yourself, provide same.)

II. BASIS OF JURISDICTION (Place an X in one box only.)

☐ 1. U.S. Government Plaintiff
☒ 3. Federal Question (U.S. Government Not a Party)
☐ 2. U.S. Government Defendant
☐ 4. Diversity (Indicate Citizenship of Parties in Item III)

III. CITIZENSHIP OF PRINCIPAL PARTIES-For Diversity Cases Only (Place an X in one box for plaintiff and one for defendant)

	PTF	DEF		PTF	DEF
Citizen of This State	☐ 1	☐ 1	Incorporated or Principal Place of Business in this State	☐ 4	☐ 4
Citizen of Another State	☐ 2	☐ 2	Incorporated and Principal Place of Business in Another State	☐ 5	☐ 5
Citizen or Subject of a Foreign Country	☐ 3	☐ 3	Foreign Nation	☐ 6	☐ 6

IV. ORIGIN (Place an X in one box only.)

☒ 1. Original Proceeding ☐ 2. Removed from State Court ☐ 3. Remanded from Appellate Court ☐ 4. Reinstated or Reopened ☐ 5. Transferred from Another District (Specify) ☐ 6. Multi-District Litigation

V. REQUESTED IN COMPLAINT: JURY DEMAND: ☒ Yes ☐ No (Check "Yes" only if demanded in complaint.)

CLASS ACTION under F.R.Cv.P. 23: ☐ Yes ☒ No ☐ **MONEY DEMANDED IN COMPLAINT: $** _____

VI. CAUSE OF ACTION (Cite the U.S. Civil Statute under which you are filing and write a brief statement of cause. Do not cite jurisdictional statutes unless diversity.)

35 U.S.C. 271

VII. NATURE OF SUIT (Place an X in one box only).

OTHER STATUTES
- ☐ 375 False Claims Act
- ☐ 400 State Reapportionment
- ☐ 410 Antitrust
- ☐ 430 Banks and Banking
- ☐ 450 Commerce/ICC Rates/Etc.
- ☐ 460 Deportation
- ☐ 470 Racketeer Influenced & Corrupt Org.
- ☐ 480 Consumer Credit
- ☐ 490 Cable/Sat TV
- ☐ 850 Securities/Commodities/Exchange
- ☐ 890 Other Statutory Actions
- ☐ 891 Agricultural Acts
- ☐ 893 Environmental Matters
- ☐ 895 Freedom of Info. Act
- ☐ 896 Arbitration
- ☐ 899 Admin. Procedures Act/Review of Appeal of Agency Decision
- ☐ 950 Constitutionality of State Statutes

CONTRACT
- ☐ 110 Insurance
- ☐ 120 Marine
- ☐ 130 Miller Act
- ☐ 140 Negotiable Instrument
- ☐ 150 Recovery of Overpayment & Enforcement of Judgment
- ☐ 151 Medicare Act
- ☐ 152 Recovery of Defaulted Student Loan (Excl. Vet.)
- ☐ 153 Recovery of Overpayment of Vet. Benefits
- ☐ 160 Stockholders' Suits
- ☐ 190 Other Contract
- ☐ 195 Contract Product Liability
- ☐ 196 Franchise

REAL PROPERTY
- ☐ 210 Land Condemnation
- ☐ 220 Foreclosure
- ☐ 230 Rent Lease & Ejectment

REAL PROPERTY CONT.
- ☐ 240 Torts to Land
- ☐ 245 Tort Product Liability
- ☐ 290 All Other Real Property

TORTS

PERSONAL INJURY
- ☐ 310 Airplane
- ☐ 315 Airplane Product Liability
- ☐ 320 Assault, Libel & Slander
- ☐ 330 Fed. Employers' Liability
- ☐ 340 Marine
- ☐ 345 Marine Product Liability
- ☐ 350 Motor Vehicle
- ☐ 355 Motor Vehicle Product Liability
- ☐ 360 Other Personal Injury
- ☐ 362 Personal Injury-Med Malpratice
- ☐ 365 Personal Injury-Product Liability
- ☐ 367 Health Care/ Pharmaceutical Personal Injury Product Liability
- ☐ 368 Asbestos Personal Injury Product Liability

IMMIGRATION
- ☐ 462 Naturalization Application
- ☐ 465 Other Immigration Actions

TORTS

PERSONAL PROPERTY
- ☐ 370 Other Fraud
- ☐ 371 Truth in Lending
- ☐ 380 Other Personal Property Damage
- ☐ 385 Property Damage Product Liability

BANKRUPTCY
- ☐ 422 Appeal 28 USC 158
- ☐ 423 Withdrawal 28 USC 157

CIVIL RIGHTS
- ☐ 440 Other Civil Rights
- ☐ 441 Voting
- ☐ 442 Employment
- ☐ 443 Housing/ Accomodations
- ☐ 445 American with Disabilities-Employment
- ☐ 446 American with Disabilities-Other
- ☐ 448 Education

PRISONER PETITIONS

Habeas Corpus:
- ☐ 463 Alien Detainee
- ☐ 510 Motions to Vacate Sentence
- ☐ 530 General
- ☐ 535 Death Penalty

Other:
- ☐ 540 Mandamus/Other
- ☐ 550 Civil Rights
- ☐ 555 Prison Condition
- ☐ 560 Civil Detainee Conditions of Confinement

FORFEITURE/PENALTY
- ☐ 625 Drug Related Seizure of Property 21 USC 881
- ☐ 690 Other

LABOR
- ☐ 710 Fair Labor Standards Act
- ☐ 720 Labor/Mgmt. Relations
- ☐ 740 Railway Labor Act
- ☐ 751 Family and Medical Leave Act
- ☐ 790 Other Labor Litigation
- ☐ 791 Employee Ret. Inc. Security Act

PROPERTY RIGHTS
- ☐ 820 Copyrights
- ☒ 830 Patent
- ☐ 840 Trademark

SOCIAL SECURITY
- ☐ 861 HIA (1395ff)
- ☐ 862 Black Lung (923)
- ☐ 863 DIWC/DIWW (405 (g))
- ☐ 864 SSID Title XVI
- ☐ 865 RSI (405 (g))

FEDERAL TAX SUITS
- ☐ 870 Taxes (U.S. Plaintiff or Defendant)
- ☐ 871 IRS-Third Party 26 USC 7609

FOR OFFICE USE ONLY: Case Number: CV13-06089

AFTER COMPLETING PAGE 1 OF FORM CV-71, COMPLETE THE INFORMATION REQUESTED ON PAGE 2.

UNITED STATES DISTRICT COURT, CENTRAL DISTRICT OF CALIFORNIA
CIVIL COVER SHEET

VIII(a). IDENTICAL CASES: Has this action been previously filed in this court and dismissed, remanded or closed? ☒ NO ☐ YES

If yes, list case number(s): _____

VIII(b). RELATED CASES: Have any cases been previously filed in this court that are related to the present case? ☒ NO ☐ YES

If yes, list case number(s): _____

Civil cases are deemed related if a previously filed case and the present case:

(Check all boxes that apply)
- ☐ A. Arise from the same or closely related transactions, happenings, or events; or
- ☐ B. Call for determination of the same or substantially related or similar questions of law and fact; or
- ☐ C. For other reasons would entail substantial duplication of labor if heard by different judges; or
- ☐ D. Involve the same patent, trademark or copyright, and one of the factors identified above in a, b or c also is present.

IX. VENUE: (When completing the following information, use an additional sheet if necessary.)

(a) List the County in this District; California County outside of this District; State if other than California; or Foreign Country, in which **EACH** named plaintiff resides.

☐ Check here if the government, its agencies or employees is a named plaintiff. If this box is checked, go to item (b).

County in this District:*	California County outside of this District; State, if other than California; or Foreign Country
	Florida

(b) List the County in this District; California County outside of this District; State if other than California; or Foreign Country, in which **EACH** named defendant resides.

☐ Check here if the government, its agencies or employees is a named defendant. If this box is checked, go to item (c).

County in this District:*	California County outside of this District; State, if other than California; or Foreign Country
Orange County, Los Angeles County, Riverside County	

(c) List the County in this District; California County outside of this District; State if other than California; or Foreign Country, in which **EACH** claim arose.
NOTE: In land condemnation cases, use the location of the tract of land involved.

County in this District:*	California County outside of this District; State, if other than California; or Foreign Country
Orange County, Los Angeles, Riverside County	Illinois

***Los Angeles, Orange, San Bernardino, Riverside, Ventura, Santa Barbara, or San Luis Obispo Counties**
Note: In land condemnation cases, use the location of the tract of land involved

X. SIGNATURE OF ATTORNEY (OR SELF-REPRESENTED LITIGANT): Erwin R. Cen DATE: 8/19/13

Notice to Counsel/Parties: The CV-71 (JS-44) Civil Cover Sheet and the information contained herein neither replace nor supplement the filing and service of pleadings or other papers as required by law. This form, approved by the Judicial Conference of the United States in September 1974, is required pursuant to Local Rule 3-1 is not filed but is used by the Clerk of the Court for the purpose of statistics, venue and initiating the civil docket sheet. (For more detailed instructions, see separate instructions sheet).

Key to Statistical codes relating to Social Security Cases:

Nature of Suit Code	Abbreviation	Substantive Statement of Cause of Action
861	HIA	All claims for health insurance benefits (Medicare) under Title 18, Part A, of the Social Security Act, as amended. Also, include claims by hospitals, skilled nursing facilities, etc., for certification as providers of services under the program. (42 U.S.C. 1935FF(b))
862	BL	All claims for "Black Lung" benefits under Title 4, Part B, of the Federal Coal Mine Health and Safety Act of 1969. (30 U.S.C. 923)
863	DIWC	All claims filed by insured workers for disability insurance benefits under Title 2 of the Social Security Act, as amended; plus all claims filed for child's insurance benefits based on disability. (42 U.S.C. 405 (g))
863	DIWW	All claims filed for widows or widowers insurance benefits based on disability under Title 2 of the Social Security Act, as amended. (42 U.S.C. 405 (g))
864	SSID	All claims for supplemental security income payments based upon disability filed under Title 16 of the Social Security Act, as amended.
865	RSI	All claims for retirement (old age) and survivors benefits under Title 2 of the Social Security Act, as amended. (42 U.S.C. 405 (g))