REID ERIC DAMMANN, ESQ. (Bar No. 249031)
rdammann@wccelaw.com
WASSERMAN, COMDEN, CASSELMAN & ESENSTEN, L.L.P.
5567 Reseda Boulevard, Suite 330
Post Office Box 7033
Tarzana, California 91357-7033
Telephone: (818) 705-6800 • (323) 872-0995
Facsimile: (818) 996-8266

Attorneys for Plaintiff 563704 B.C. Ltd.

FILED
11 MAR 29 PM 3:47
CLERK U.S. DISTRICT COURT
CENTRAL DIST. OF CALIF.
LOS ANGELES
BY

UNITED STATES DISTRICT COURT

CENTRAL DISTRICT OF CALIFORNIA, WESTERN DIVISION

CV11 02642 JSL VBKx

563704 B.C., LTD., a Canadian Corporation,

Plaintiff,

vs.

REEBOK INTERNATIONAL, LTD., a corporation; POWER SYSTEMS, INC., a corporation; DICK'S SPORTING GOODS, INC., a corporation; M-F ATHLETIC COMPANY, INC., a corporation; AMAZON.COM, INC., a corporation; DIAMOND FITNESS SYSTEMS, INC, a corporation; ESCAPE FITNESS LIMITED, a foreign corporation; PHYSICAL COMPANY LTD, a foreign corporation; FIND IMPORT CORPORATION dba ATAFA.COM, a corporation; and DOES 1 through 10,

Defendants.

CASE NO.

COMPLAINT FOR INFRINGEMENT OF U.S. PATENT NO. 6,414,197

[DEMAND FOR JURY TRIAL]

Plaintiff 563704 B.C. files this complaint against Reebok International, Ltd., Power Systems, Inc., Dick's Sporting Goods, Inc., M-F Athletic Company, Inc., Amazon.com, Inc., Diamond Fitness Systems, Inc, Escape Fitness Limited, Physical Company Ltd., Find Import Corporation dba Atafa.com, and DOES 1 through 10 (collectively referred to herein as "Defendants"):

WASSERMAN, COMDEN, CASSELMAN & ESENSTEN, L.L.P.
5567 RESEDA BOULEVARD, SUITE 330
POST OFFICE BOX 7033
TARZANA, CALIFORNIA 91357-7033

WASSERMAN, COMDEN, CASSELMAN & ESENSTEN, L.L.P.
5567 RESEDA BOULEVARD, SUITE 330
POST OFFICE BOX 7033
TARZANA, CALIFORNIA 91357-7033

THE PARTIES

1. Plaintiff 563704 B.C., Ltd. ("563704") is a Canadian corporation with a principal place of business at I-6501 Sprott Street, Burnaby BC, V54B 3B8 Canada. 563704 owns all right, title and interest in, and has standing to sue for infringement of United States Patent No. 6, 413,197 (the "197 patent"), entitled "Torsion Board," issued on July 2, 2002, with full and exclusive right to bring suit to enforce this patent, including the right to recover for past infringement. A copy of the '197 patent is attached hereto as Exhibit A.

2. Upon information and belief, Defendant Reebok International, Ltd. ("Reebok") is a corporation organized and existing under the laws of Massachusetts and has a principal place of business at 1895 J.W. Foster Blvd., Canton, MA 02021. Upon information and belief, Reebok designs, licenses, markets, imports, offers for sale, sells, and/or distributes exercise products in the United States, including this Judicial District, that infringe the claims of the '197 patent. Upon further information and belief, Reebok has knowingly and actively infringed, contributed to infringement and/or has induced others to commit such acts of infringement in this Judicial District.

3. Upon information and belief, Defendant Power Systems, Inc. ("Power Systems") is a corporation organized and existing under the laws of Tennessee and has a principal place of business at 5700 Casey Dr., Knoxville, Tennessee 37909. Upon information and belief, Power Systems designs, licenses, markets, imports, offers for sale, sells, and/or distributes exercise products in the United States, including this Judicial District, that infringe the claims of the '197 patent. Upon further information and belief, Power Systems has knowingly and actively infringed, contributed to infringement and/or has induced others to commit such acts of infringement in this Judicial District.

WASSERMAN, COMDEN, CASSELMAN & ESENSTEN, L.L.P.
5567 RESEDA BOULEVARD, SUITE 330
POST OFFICE BOX 7033
TARZANA, CALIFORNIA 91357-7033

4. Upon information and belief, Defendant Dick's Sporting Goods, Inc. ("Dick's Sporting Goods") is a corporation organized and existing under the laws of Delaware and has a principal place of business at 345 Court Street, Coraopolis, Pennsylvania 15108. Upon information and belief, Dick's Sporting Goods designs, licenses, markets, imports, offers for sale, sells, and/or distributes exercise products in the United States, including this Judicial District, that infringe the claims of the '197 patent. Upon further information and belief, Dick's Sporting Goods has knowingly and actively infringed, contributed to infringement and/or has induced others to commit such acts of infringement in this Judicial District.

5. Upon information and belief, Defendant M-F Athletic Company, Inc. ("M-F Athletic Company") is a corporation organized and existing under the laws of Rhode Island and has a principal place of business at 11 Amflex Drive, Cranston, Rhode Island 02921. Upon information and belief, M-F Athletic Company designs, licenses, markets, imports, offers for sale, sells, and/or distributes exercise products in the United States, including this Judicial District, that infringe the claims of the '197 patent. Upon further information and belief, M-F Athletic Company has knowingly and actively infringed, contributed to infringement and/or has induced others to commit such acts of infringement in this Judicial District.

6. Upon information and belief, Defendant Amazon.com, Inc. ("Amazon.com") is a corporation organized and existing under the laws of Washington and has a principal place of business at 410 Terry Avenue North, Seattle, WA 98109-5210. Upon information and belief, Amazon.com designs, licenses, markets, imports, offers for sale, sells, and/or distributes exercise products in the United States, including this Judicial District, that infringe the claims of the '197 patent. Upon further information and belief, Amazon.com has knowingly and actively infringed, contributed to infringement and/or has induced others to commit such acts of infringement in this Judicial District.

WASSERMAN, COMDEN, CASSELMAN & ESENSTEN, L.L.P.
5567 RESEDA BOULEVARD, SUITE 330
POST OFFICE BOX 7033
TARZANA, CALIFORNIA 91357-7033

7. Upon information and belief, Defendant Diamond Fitness Systems, Inc. ("Diamond Fitness") is a corporation organized and existing under the laws of Washington and has a principal place of business at 41225 Coolidge Circle, Murrieta, CA 92562. Upon information and belief, Diamond Fitness designs, licenses, markets, imports, offers for sale, sells, and/or distributes exercise products in the United States, including this Judicial District, that infringe the claims of the '197 patent. Upon further information and belief, Diamond Fitness has knowingly and actively infringed, contributed to infringement and/or has induced others to commit such acts of infringement in this Judicial District.

8. Upon information and belief, Defendant Escape Fitness Limited ("Escape Fitness") is a foreign corporation organized and existing under the laws of the United Kingdom and has a principal place of business at the Eastwood House, Cygnet Park, The Office Village, Hampton Peterborough Cambridgeshire PE7 8FD United Kingdom. Upon information and belief, Escape Fitness designs, licenses, markets, imports, offers for sale, sells, and/or distributes exercise products in the United States, including this Judicial District, that infringe the claims of the '197 patent. Upon further information and belief, Escape Fitness has knowingly and actively infringed, contributed to infringement and/or has induced others to commit such acts of infringement in this Judicial District.

9. Upon information and belief, Defendant Physical Company Limited ("Physical Company") is a foreign corporation organized and existing under the laws of the United Kingdom and has a principal place of business at 2a Desborough Industrial Park, Desborough Park Road, High Wycombe Bucks, HP12 3B, United Kingdom. Upon information and belief, Physical Company designs, licenses, markets, imports, offers for sale, sells, and/or distributes exercise products in the United States, including this Judicial District, that infringe the claims of the '197 patent. Upon further information and belief, Physical Company has knowingly and actively infringed, contributed to infringement and/or has induced others to commit such acts of infringement in this Judicial District.

WASSERMAN, COMDEN, CASSELMAN & ESENSTEN, L.L.P.
5567 RESEDA BOULEVARD, SUITE 330
POST OFFICE BOX 7033
TARZANA, CALIFORNIA 91357-7033

10. Upon information and belief, Defendant Find Import Corporation dba Atafa.com ("ATAFA") is a corporation organized and existing under the laws of Massachusetts and has a principal place of business at 101 First Street, Cambridge, MA 02141. Upon information and belief, ATAFA designs, licenses, markets, imports, offers for sale, sells, and/or distributes exercise products in the United States, including this Judicial District, that infringe the claims of the '197 patent. Upon further information and belief, ATAFA has knowingly and actively infringed, contributed to infringement and/or has induced others to commit such acts of infringement in this Judicial District.

11. The true names and capacities of the Defendants named herein as DOES 1 through 10, whether individual, corporate, associate, or otherwise, are currently unknown to Plaintiff, who therefore sues said Defendants as DOES 1 through 10. Plaintiff is informed and believes and on that basis alleges that DOES 1 through 10 were responsible in some manner for the acts alleged herein and, therefore, are liable to Plaintiff. Plaintiff will seek leave of this Court to amend its complaint to show their true names and capacities when ascertained.

JURISDICTION AND VENUE

12. This Court has subject matter jurisdiction over this action pursuant to 35 U.S.C. §§ 1 et seq., including 35 U.S.C. § 271, 281, 283, 284, and 285.

13. This Court has jurisdiction over this action pursuant to 28 U.S.C. §§ 1331, 28 U.S.C. §§ 1333 and 28 U.S.C. §§ 1338(a).

14. This Court has personal jurisdiction over each Defendant because each Defendant conducts, and has conducted, substantial business within the State of California and has committed the act of patent infringement giving rise to this action in this Judicial

District, including, inter alia, making, using, importing, offering for sale, and/or selling infringing products and/or components. Defendants have established minimum contacts with the forum such that the exercise of jurisdiction over them would not offend traditional notions of fair play and substantial justice.

15. Venue is proper in this Court under 28 U.S.C. § 1391 and 28 U.S.C. § 1400 because a substantial part of the events or omissions giving rise to the claims asserted herein occurred or had effects in this district, Defendants reside in this district for purposes of 28 U.S.C. § 1391(b)(1), Defendants conduct business in this district, including, among other things, making, using, offering for sale, selling, and/or importing the infringing products in this district, and are subject to personal jurisdiction in this district.

COUNT ONE

(Patent Infringement of the '197 Patent)

16. Plaintiff realleges and incorporates herein the allegations of the preceding paragraphs of this Complaint as if fully set forth herein.

17. On July 2, 2002, United States Patent No. 6, 413,197, entitled "Torsion Board," issued (the '197 patent) (attached hereto as Exhibit A) was duly and legally issued by the United States Patent and Trademark Office.

18. Plaintiff is the lawful owner by assignment of all right, title and interest in and to the '197 patent.

19. Upon information and belief, in violation of 35 U.S.C. § 271, Defendants have infringed and are continuing to infringe, literally and/or under the doctrine of equivalents, the '197 patent by practicing one or more claims of the '197 patent in the

WASSERMAN, COMDEN, CASSELMAN & ESENSTEN, L.L.P.
5567 RESEDA BOULEVARD, SUITE 330
POST OFFICE BOX 7033
TARZANA, CALIFORNIA 91357-7033

making, using, offering for sale, selling, and/or importing exercise products. Plaintiff reserves its right to contend that additional products of Defendants' infringe the '197 patent.

20. Upon information and belief, in violation of 35 U.S.C. § 271, Defendants have infringed and are continuing to infringe the '197 patent by contributing to and/or actively inducing the infringement by others of the '197 patent in the making, using, offering for sale, selling, and/or importing exercise products. Plaintiff reserves its right to contend that additional products of Defendants' indirectly infringe the '197 patent. Upon information and belief, Defendants knew or should have known their actions would cause direct infringement of the '197 patent and did so with intent to encourage direct infringement.

21. Upon information and belief, Defendants' infringement of the '197 patent has been, and continues to be, willful, deliberate, and intentional as Defendants continue their acts of infringement after being placed on notice of their infringement, thus acting in reckless disregard of Plaintiff's patent rights.

22. Upon information and belief, Defendants' acts of infringement of the '197 patent will continue after service of this complaint unless enjoined by the Court.

23. As a result of Defendants' infringement, Plaintiff has suffered and will suffer damages.

24. Plaintiff is entitled to recover from Defendants the damages sustained by Plaintiff as a result of Defendants' wrongful acts in an amount subject to proof at trial.

WASSERMAN, COMDEN, CASSELMAN & ESENSTEN, L.L.P.
5567 RESEDA BOULEVARD, SUITE 330
POST OFFICE BOX 7033
TARZANA, CALIFORNIA 91357-7033

WASSERMAN, COMDEN, CASSELMAN & ESENSTEN, L.L.P.
5567 RESEDA BOULEVARD, SUITE 330
POST OFFICE BOX 7033
TARZANA, CALIFORNIA 91357-7033

PRAYER FOR RELIEF

WHEREFORE, Plaintiff respectfully prays for judgment and an order against the Defendants:

1. Adjudging that the making, use offer for sale, selling, and/or importing exercise products by the Defendants infringes one or more claims of the '197 patent;

2. Adjudging that the Defendants infringed, actively induced others to infringe and/or contributorily infringed the '197 patent;

3. An award of damages adequate to compensate the Plaintiff for Defendants' infringement of each of the patents-in-suit pursuant to 35 U.S.C. § 284;

4. Adjudging that Defendants be ordered to pay treble damages for willful infringement of each of the patents-in-suit pursuant to 35 U.S.C. § 284;

5. Adjudging this to be an exceptional case and awarding Plaintiff attorneys' fees pursuant to 35 U.S.C. § 285;

6. A grant of permanent injunction that Defendants, their officers, agents, servants, employees, and those persons acting in active concert or in participation with them be enjoined from further infringement of each of the patents-in-suit pursuant to 35 U.S.C. § 283;

7. Adjudging that Defendants be ordered to pay prejudgment interest;

8. Adjudging that Defendants be ordered to pay all costs associated with this

action; and

9. That Plaintiff be granted such other and additional relief as the Court deems just and proper.

DEMAND FOR JURY TRIAL

Plaintiff hereby demands a trial by jury pursuant to Rule 38 of the Federal Rules of Civil Procedure.

DATED: March 29, 2011

WASSERMAN, COMDEN, CASSELMAN & ESENSTEN, L.L.P.

By: _____
REID ERIC DAMMANN, ESQ.
Attorneys for Plaintiff 563704 B.C. Ltd.

WASSERMAN, COMDEN, CASSELMAN & ESENSTEN, L.L.P.
5567 RESEDA BOULEVARD, SUITE 330
POST OFFICE BOX 7033
TARZANA, CALIFORNIA 91357-7033

EXHIBIT "A"

US006413197B2

(12) **United States Patent**
McKechnie et al.

(10) **Patent No.: US 6,413,197 B2**
(45) **Date of Patent: Jul. 2, 2002**

(54) **TORSION BOARD**

(75) Inventors: **Alexander McKechnie**, Coquitlam; **Frantisek Ziak**, Port Moody, both of (CA)

(73) Assignee: **563704 B.C. Ltd.**, British Columbia (CA)

(*) Notice: Subject to any disclaimer, the term of this patent is extended or adjusted under 35 U.S.C. 154(b) by 0 days.

(21) Appl. No.: **09/175,922**

(22) Filed: **Oct. 20, 1998**

(51) **Int. Cl.**[7] **A63B 23/08**
(52) **U.S. Cl.** **482/146**; 482/147; 482/127
(58) **Field of Search** 482/146, 147, 482/80, 127, 79

(56) **References Cited**

U.S. PATENT DOCUMENTS

3,024,021	A		3/1962	Coplin et al.
3,451,672	A		6/1969	Kazdan
3,488,049	A		1/1970	Sasser, Jr.
3,491,189	A		1/1970	Scheuerer et al.
3,586,321	A		6/1971	Gehrke et al.
3,604,726	A		9/1971	Tracy
3,862,768	A		1/1975	England
3,929,329	A		12/1975	Rivera
3,961,787	A		6/1976	Studebaker et al.
3,984,100	A		10/1976	Firster
4,491,318	A		1/1985	Francke
4,505,477	A		3/1985	Wilkinson
4,601,469	A		7/1986	Sasser, Jr.
4,759,542	A		7/1988	Hudec
4,817,950	A	*	4/1989	Goo 482/146
4,850,588	A		7/1989	Desjardins et al.
4,905,994	A		3/1990	Hartz
4,966,364	A	*	10/1990	Eggenberger 482/146
5,002,272	A		3/1991	Hofmeister
5,048,823	A		9/1991	Bean
5,062,624	A	*	11/1991	Vaughan 482/146
5,190,506	A		3/1993	Zubik et al.
5,292,296	A		3/1994	Davignon
5,310,395	A	*	5/1994	Ko 482/146
5,399,140	A		3/1995	Klippel
5,522,783	A		6/1996	Gordon
5,536,226	A		7/1996	Gordon
5,603,334	A		2/1997	Sharp
5,611,524	A		3/1997	Gordon
5,643,161	A		7/1997	Gordon
5,667,462	A		9/1997	Gordon
5,674,166	A		10/1997	Gordon
5,683,337	A		11/1997	Zetocha et al.
5,749,816	A		5/1998	Froelich, Sr. et al.
5,810,703	A		9/1998	Stack
5,820,096	A		10/1998	Lynch et al.

FOREIGN PATENT DOCUMENTS

FR	2 410 486	6/1979
FR	2 592 802	7/1987

* cited by examiner

Primary Examiner—Jerome Donnelly
(74) *Attorney, Agent, or Firm*—Fulwider Patton Lee & Utecht, LLP

(57) **ABSTRACT**

A torsion board comprising a platform for supporting a user, a ground contacting member for maintaining the torsion board generally in a fixed position and orientation with respect to a ground surface and a resilient interconnecting member mounted between the ground contacting member and the platform to permit pivoting of the platform about first, second and third orthogonal axes, said first axis being generally coincident with a gravitational axis along which gravitational forces act upon said user.

11 Claims, 5 Drawing Sheets

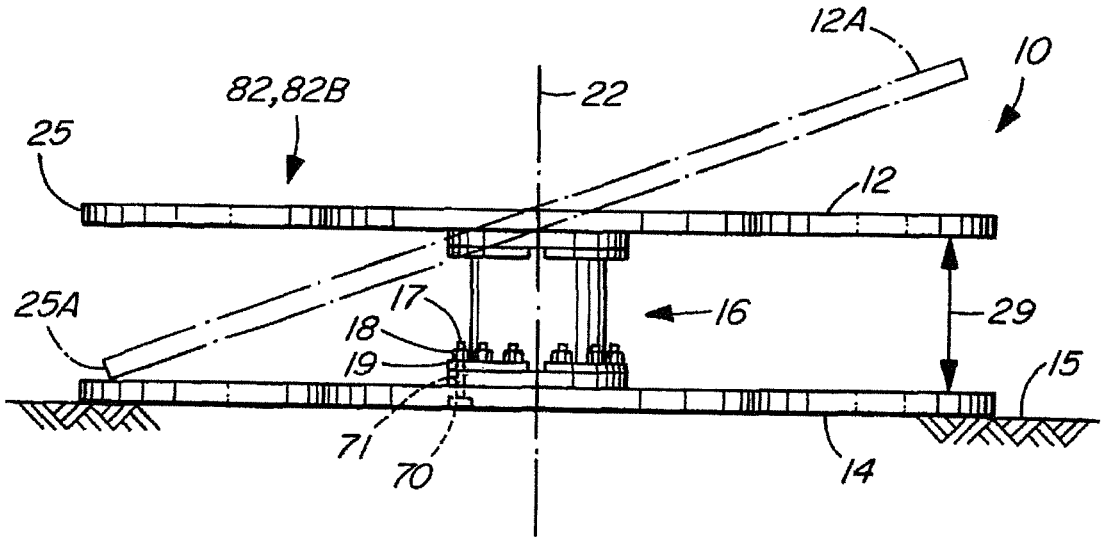

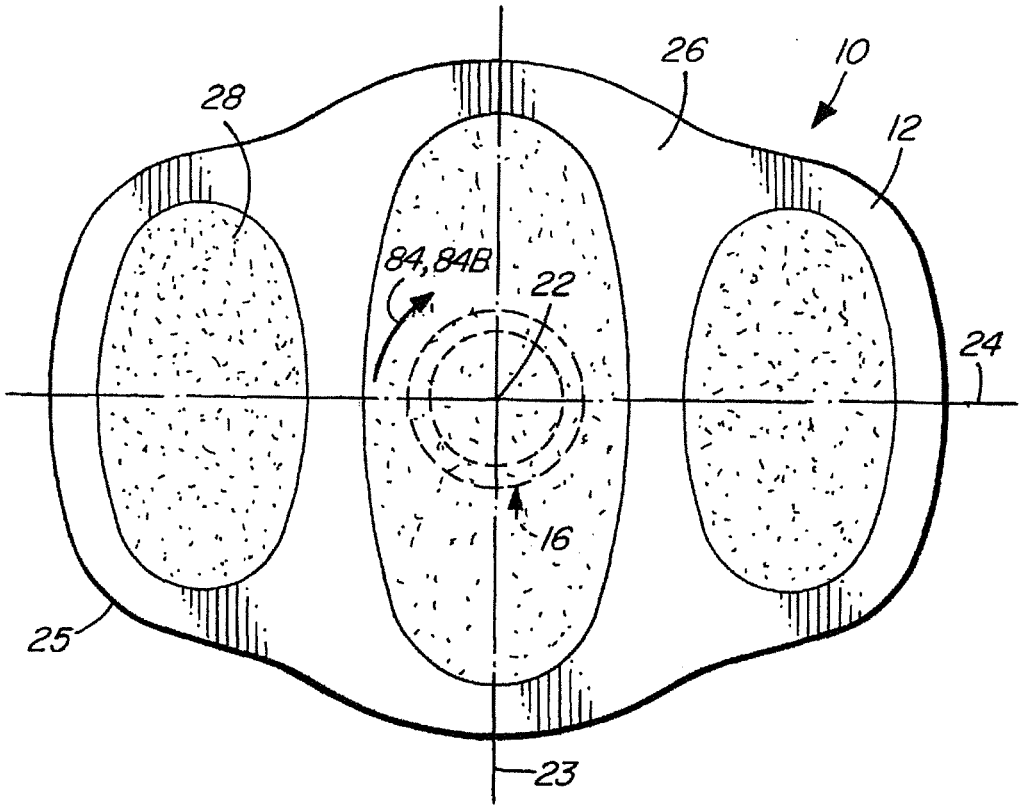
26
10
28
12
84,84B
22
24
16
25
23

FIG. 1

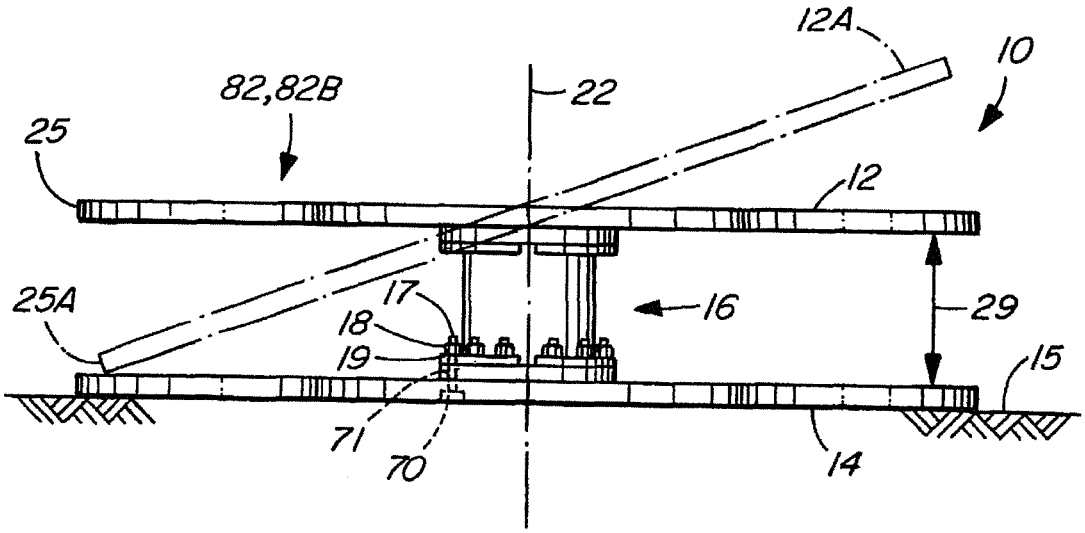
12A
10
82,82B
22
25
12
25A
17
16
29
18
19
15
71
70
14

FIG. 2

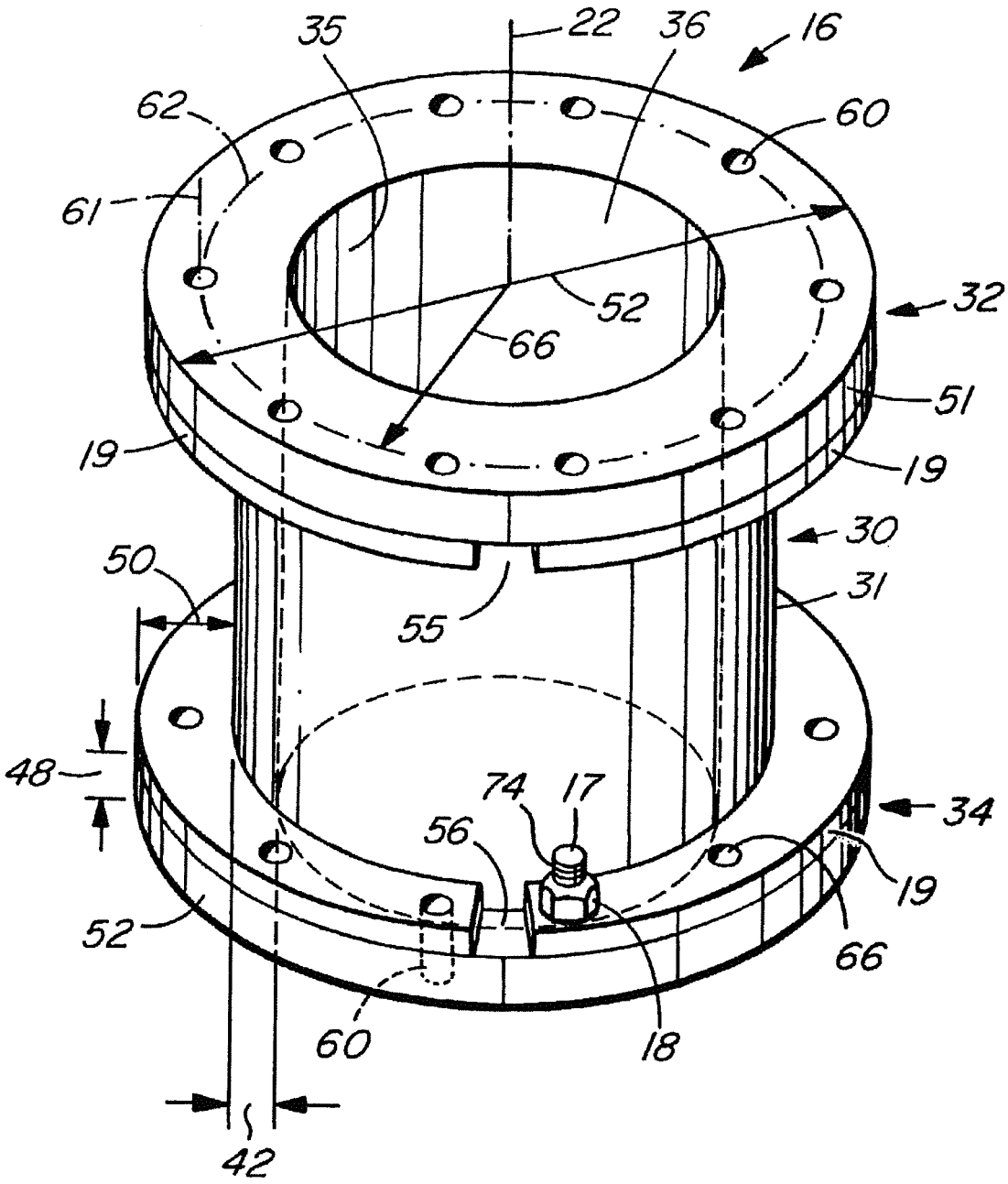
35
22
36
16
62
60
61
52
66
32
51
19
19
30
50
31
55
48
74
17
56
34
19
52
66
60
18
42

FIG. 3

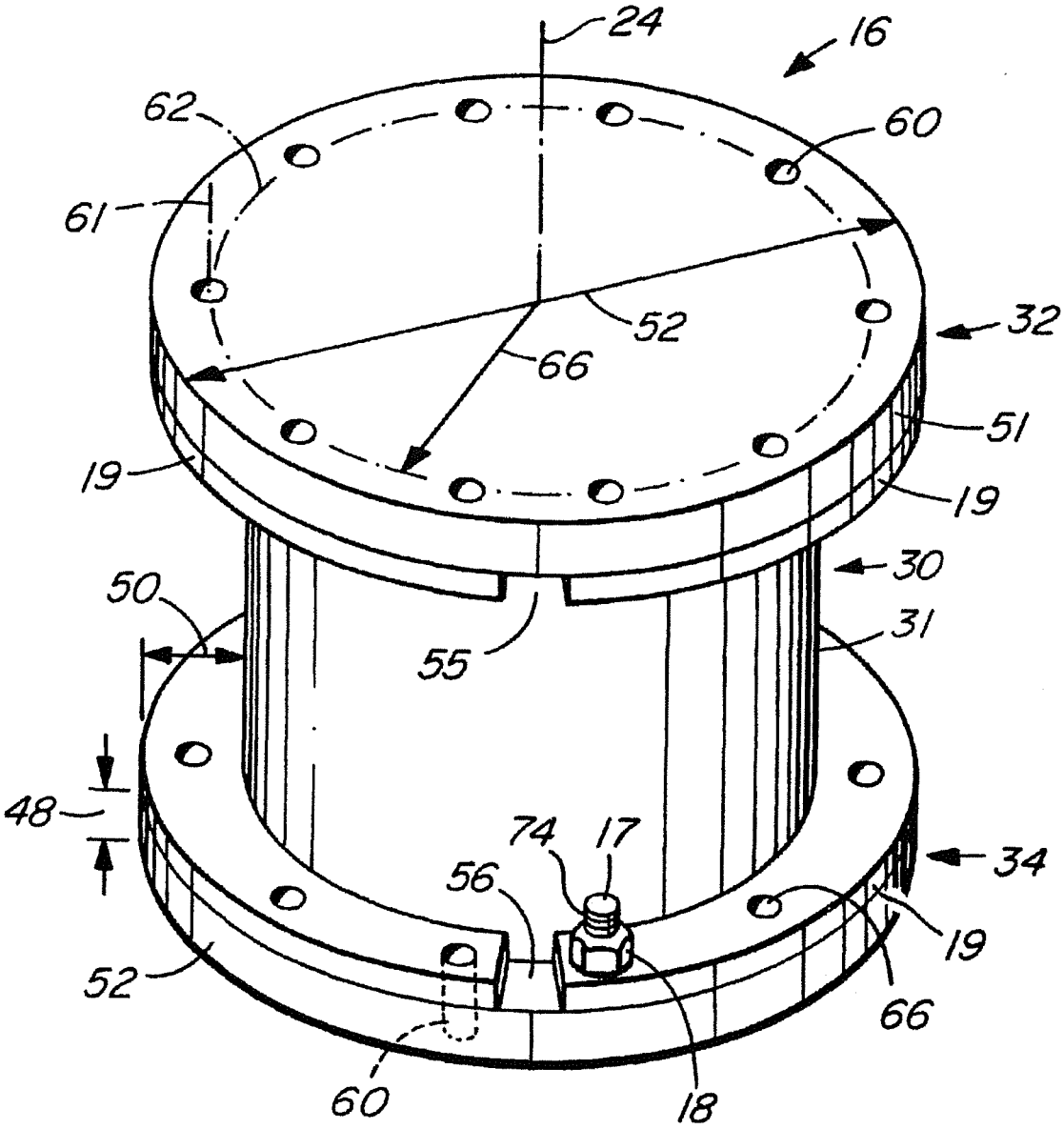
24
16
62
60
61
52
66
32
51
19
19
30
50
31
55
48
74
17
34
56
19
52
66
60
18

FIG. 4

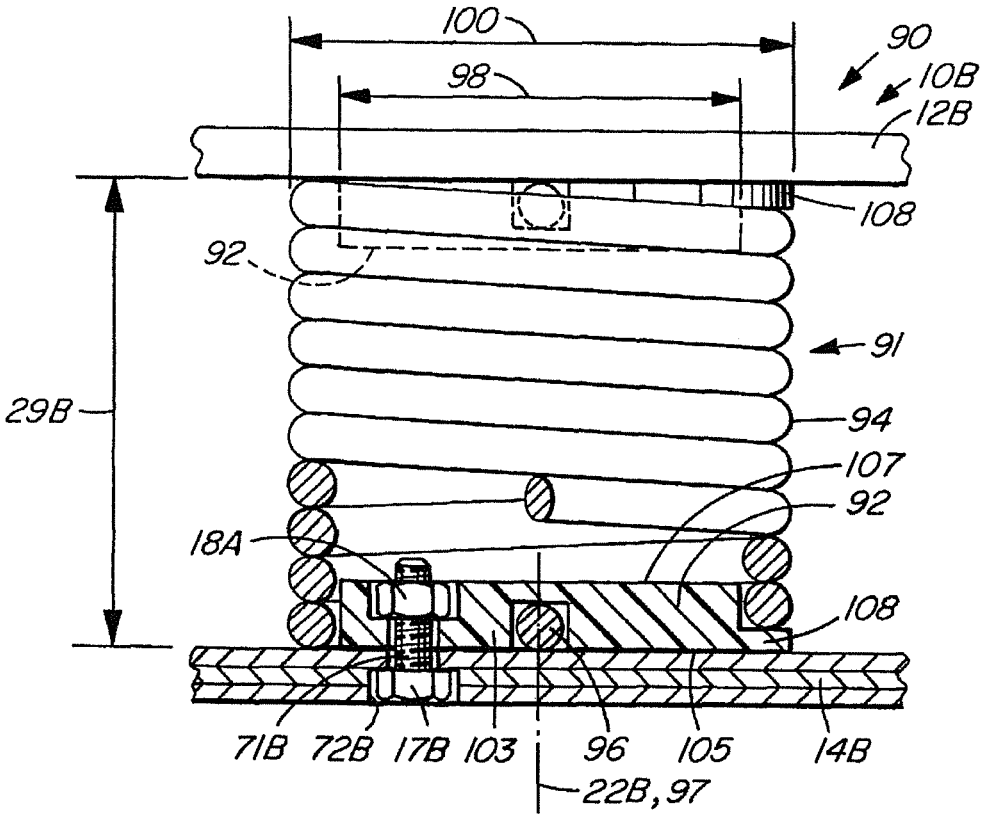
100
98
90
10B
12B
108
92
91
29B
94
107
92
18A
108
71B
72B
17B
103
96
105
14B
22B, 97

FIG. 5

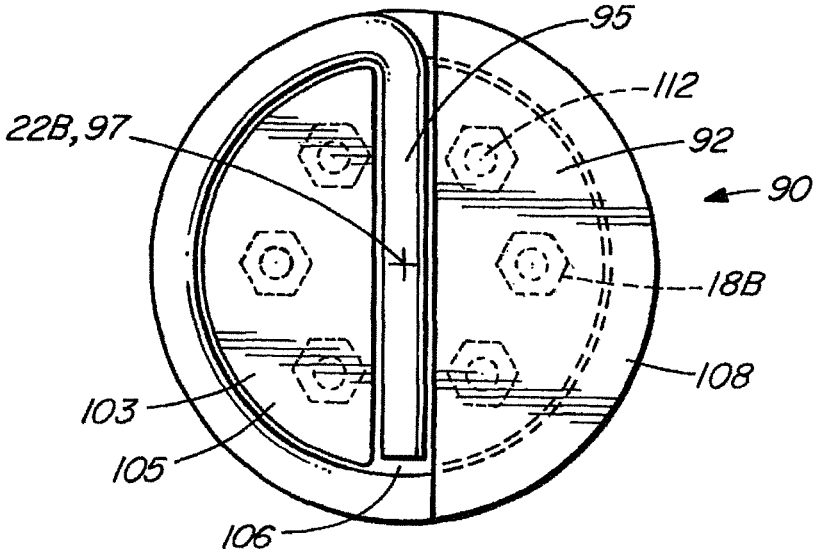
95
112
22B, 97
92
90
18B
108
103
105
106

FIG. 6

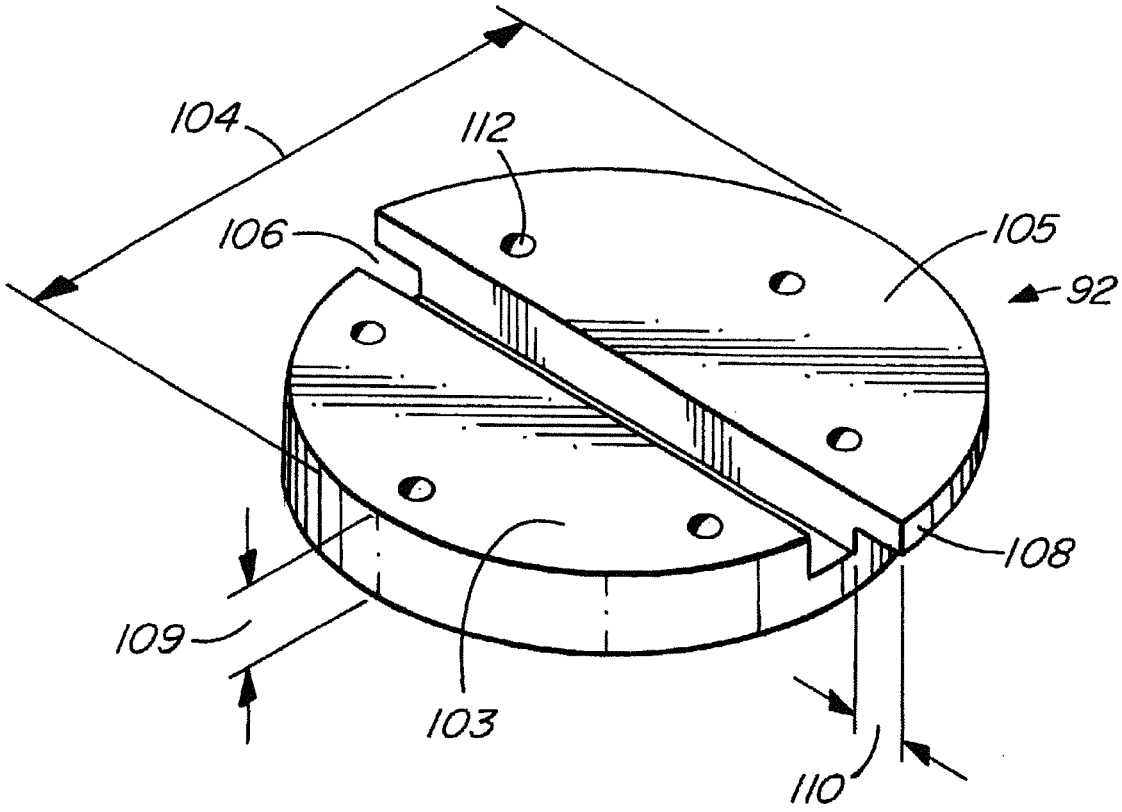

FIG. 7

TORSION BOARD

BACKGROUND OF THE INVENTION

This invention relates generally to the field of sports and exercise equipment, and, in particular to a torsion exercise board for improving and developing the strength, coordination and balancing ability of an individual.

Developing a good sense of balance, proprioception and coordination is generally a matter of practice. Many popular sports activities require a user to develop a well developed sense of proprioception or body awareness, including balance, in order to become proficient. For example, sports such as cycling, skiing, snowboarding, skateboarding and the like all involve the use of equipment that requires the user to be able to accurately control their position on the equipment. Continuous shifting and adjustment of the user's weight and centre of gravity with respect to the equipment at appropriate times is vital to proper use of the equipment and full enjoyment of the sport.

In the normal course of growing up, a person must develop an advanced sense of balance and coordination in order to graduate from a baby's crawling movements to the common walking and running movements of a child or adult. However, once the walking and running movements are mastered, balance, proximity to objects, inertia and rhythm of motion needed for manoeuvring in the everyday world are taken for granted by most people. To a large extent, everyday play of a child develops and refines these skills and perceptions. Common toys and sporting equipment such as bicycles, skateboards and snowboards also allow a person to practice and refine their coordination, strength and balance, for recreation and sports and during rehabilitation following injury.

In order to concentrate on developing these skills, apparatus known as balance or balancing boards have been developed. Prior art boards and other relevant exercise equipment known to the applicant are described in the following patents:

U.S. Pat. No. 842,462 to Grafin
U.S. Pat. No. 3,451,672 to Kazdan
U.S. Pat. No. 3,488,049 to Sasser
U.S. Pat. No. 3,491,189 to Mutius
U.S. Pat. No. 3,586,321 to Gehrke
U.S. Pat. No. 3,862,768 to England
U.S. Pat. No. 3,961,787 to Studebaker
U.S. Pat. No. 4,491,318 to Francke
U.S. Pat. No. 4,505,477 to Wilkinson
U.S. Pat. No. 4,601,469 to Sasser
U.S. Pat. No. 4,759,542 to Hudec
U.S. Pat. No. 4,850,588 to Desjardins
U.S. Pat. No. 5,048,823 to Bean
U.S. Pat. No. 5,190,506 to Zubik et al.
U.S. Pat. No. 5,292,296 to Davignon
U.S. Pat. No. 5,399,140 to Klippels

Many prior art boards involve a platform that is pivotable about a singe axis. While this arrangement is initially challenging for a beginner, with practice, it becomes relatively easy to master. Alternatively, other balancing board designs rely on a spherical or hemispherical pivot point that permits movement in all directions. Such a design requires a well developed sense of balance to use and it is therefore best suited to an advanced user. Unfortunately, for a beginner, a spherical or hemi-spherical pivot is frustrating to use as consistent balance is difficult to achieve.

A more demanding application involves physical therapy patients who may be unable to even achieve balance on such prior art boards, and thus be unable to benefit from exercise to the torso and foot and leg muscles and joints that might be available to less physically challenged users of such a board.

What is needed is an exercise board that permits pivoting about three, orthogonal axes, permitting both novice and experienced users to engage in a desired level of exercise involving resistance, torsion and recoil, at increasing levels of difficulty. The current invention addresses these needs.

BRIEF SUMMARY OF THE INVENTION

In accordance with one aspect of the invention, there is provided a torsion board comprising a platform for supporting a user, a ground contacting member for maintaining the torsion board generally in a fixed position and orientation with respect to a ground surface, and a resilient interconnecting member mounted between the ground contacting member and the platform. The resilient interconnecting member permits pivoting of the platform about first, second and third orthogonal axes, the first axis being generally coincident with a gravitational axis along which gravitational forces act upon the user.

Preferably, the resilient interconnecting member, the platform and the ground contacting member are dimensioned such that the platform contacts the ground contacting member during the rotation of the platform about the second and the third axis to limit the rotation to a predetermined amount.

Preferably, the resilient interconnecting member is formed from an elastically deformable material. It is preferred that the elastically deformable material is urethane having a hardness in the range of about 50–90 on the Shore Durometer A Scale.

Preferably, the resilient interconnecting member is generally cylindrical, the platform and the ground contacting member being affixed to opposite ends of the interconnecting member.

It is preferred that the resilient interconnecting member is formed with integral mounting flanges at opposite ends to receive fasteners for mounting the resilient interconnecting member to the platform and the ground contacting member.

The interconnecting member can be either a solid cylinder or have a hollow inner core. The shape of the hollow core can be selected to define an interconnecting member with walls of generally uniform thickness or of non-uniform thickness.

In another embodiment of the invention, it is preferred that the resilient interconnecting member comprises at least one coil spring.

The apparatus of the present invention provides a device that can be used for exercise and recreation. As well, the apparatus is useful as a physical therapy and rehabilitation device that permits controlled, varied flexing of body joints.

DETAILED DESCRIPTION OF THE INVENTION

BRIEF DESCRIPTION OF THE SEVERAL VIEWS OF THE DRAWING

In drawings which illustrate embodiments of the invention,

FIG. 1 is a plan view of a torsion board according to a first embodiment of the invention;

FIG. 2 is side elevation of the torsion board of FIG. 1;

FIG. 3 is a perspective view of a resilient interconnecting member having a hollow core, according to the first embodiment of the invention;

FIG. 4 is a perspective view of a resilient interconnecting member having a solid core, according to the first embodiment of the invention; and

FIG. 5 is a side elevation of a resilient interconnecting member according to a second embodiment of the invention.

FIG. 6 is a plan view of the apparatus of FIG. 5.

FIG. 7 is a perspective view of a clamping insert according to the second embodiment of the invention.

FIGS. 1 and 2:

Referring to FIGS. 1 and 2, a torsion board according to the first embodiment of the invention is shown generally at 10. The board includes a generally planar, elongated user platform 12 for supporting a user, a similar, generally planar ground platform 14 for supporting the torsion board 10 on a generally horizontal floor or ground surface 15 and a resilient interconnecting member 16. The ground platform 14 thus acts as a ground contacting member. The resilient interconnecting member is preferably affixed to the platforms with a plurality of bolts 17, nuts 18, and pressure plates 19. The resilient interconnecting member permits the user, when upon the user platform 12, to effect rotation of the user platform 12 about a first, generally vertical axis 22 relative to the ground platform 14, while maintaining the user platform 12 in a plane generally parallel to the ground 15 by balancing. The balancing being effected by minimizing pivoting of the user platform 12 about generally horizontal second and third axes 23 and 24. The first axis 22 is generally coincident with a gravitational axis along which gravitational forces act upon the user.

The user platform 12 and ground platform 14 are preferably formed of multi-ply hardwood material having a thickness of approximately 0.5 inches, each lying in a plane parallel to a plane defined by the second and third axes 23 and 24 and with each having a first dimension of approximately 32 inches as measured along an axis parallel to the second axis 23, a second dimension of approximately 20 inches as measured along an axis parallel to the third axis 24, and having a perimeter edge 25 having generally rounded corners. The above mentioned preferred dimensions and materials provide a user platform 12 that is rigid and durable. The user platform 12 has a user surface 26 with a plurality of friction surfaces 28 formed or affixed thereupon for providing non-slip contact regions for contacting the user's feet (not shown).

FIG. 3:

Referring to FIG. 3, there is shown a preferred embodiment of the resilient interconnecting member 16. The member 16 is preferably formed from urethane material having a hardness of between 60 and 90 on the Shore Durometer A Scale, has a cylindrical body portion 30, with first and second identical annular flanges 32 and 34 formed at respective ends thereof. The interconnecting member can be injection moulded. The body portion 30 is dimensioned to be resiliently flexible to permit bending without collapsing, and to permit torsional deformation about the first, normally vertical axis 22. In the illustrated embodiment of FIG. 3, the interconnecting member 16 has a hollow core defined by central cavity 36 having a cylindrical inner surface 35. Outer surface 31, inner surface 35 of the body portion 30 and flanges 32 and 34 are coaxially aligned about the first axis 22. In the illustrated example, outer surface 31 has a diameter of approximately 3.0 inches, the inner surface 35 a diameter of approximately 1.0 inch, the body portion 30 thus having a uniform wall thickness of approximately 1.0 inches, corresponding to the distance 42 between the outer and inner surfaces, 31 and 35.

This arrangement with a central cavity 36 is intended to support larger and heavier users. The overall dimensions of the body portion 30 are selected to support the user while the central core is removed to permit relatively easy torsional deformation of the body portion 30 about the vertical axis 22, especially in cases where the body portion 30 has a larger diameter for providing greater stability for heavier users. It will be appreciated by those skilled in the art that resistance to bending of a structure similar to the resilient interconnecting member is determined largely by an outer diameter of such a member, while torsional resistance is generally proportional to cross sectional area of the member. The cavity is therefore sized to effect a desired reduction in torsional resistance with a somewhat lesser proportional reduction in bending resistance. For smaller or lighter users, the diameter of the cylindrical body portion 30 can be reduced and the resilient interconnecting member formed as a solid cylinder without the cavity 36. Such a body portion 30 is shown in FIG. 4, and has a resistance to bending moments and to torsional moments within a useful range.

It will also be appreciated that the resilient interconnecting member 16 may be formed to have a non-cylindrical shape, in order to provide different resistances to bending moments about the second and third axes 23 and 24, for example.

A particular advantage arising from the use of the resilient interconnecting member 16 of the present embodiment is the attainment of a generally stable dimension 29 separating the platforms over a wide range of user weights. The resilient interconnecting member 16, when formed of urethane having the hardness and dimensions disclosed in the present example, permits a user weighing from approximately 50 pounds to more than 200 pounds to effect full exercise benefits from use of the board. As disclosed elsewhere herein, exercising characteristics may be altered by changing dimensions of the resilient interconnecting member to suit users of differing weights and strengths.

In the interconnecting member 16 of FIG. 3, the flanges 32 and 34 each have a thickness 48 of approximately 0.5 inches and a flange width 49 of approximately 0.8 inches. The flanges 32 and 34 thus have similar cylindrical outer surfaces 50 and 51 each having a diameter 52 of approximately 4.6 inches. The resilient interconnecting member thus has parallel, annular end surfaces 53 and 54 each with outer diameter 52 of 4.6 inches and an inner diameter of 1.0 inches. The inner diameter in each case corresponds to the diameter of the inner surface 35. The end surfaces are separated by a distance of 3.5 inches, to define a rest separation, or stable dimension 29 between the user platform 12 and the ground platform 14, as shown in FIG. 2.

Flanges 32 and 34 also have parallel, annular proximal surfaces 55 and 56, respectively, with a plurality of bolt holes 60 drilled or formed therethrough, for receiving the fastening bolts 17.

The bolt holes 60 are formed along respective axes 61 parallel to first axis 22, the axes 61 being uniformly radially distributed about the flanges 32 and 34 and having centres upon a bolt circle 62 aligned concentrically with the outer and inner cylindrical surfaces 31 and 35. The bolt circle 62 has a diameter of approximately 3.8 inches, the holes 60 thus lying approximately midway across the proximal annular surfaces 55 and 56, between the outer surface 31 and the outer flange surfaces 50 and 51.

Four semi-annular pressure plates **19** are formed from semi-rigid material such as ¼ inch thick plywood, each having an inner annular radius slightly greater than 1.5 inches and an outer annular radius of approximately 2.3 inches, and each spanning an arc of slightly less than 180 degrees. Two such pressure plates **19** placed in opposing fashion upon either proximal surface **55** or **56** form a two-part, generally annular ring thereupon.

Each pressure plate **19** has a plurality of plate holes **66**, the holes being formed about the pressure plates **19** such that when the pressure plates **19** are placed upon proximal surfaces **55** and **56**, plate holes **66** are aligned concentrically with corresponding bolt holes **60**. Plate holes **66** each have a diameter equal to that of the bolt holes **60**.

Returning to FIG. **1**, the user platform **12** and the ground platform **14** each have a plurality of corresponding platform holes **70** and concentric recesses formed therein. The platform holes are distributed on a circle about the first axis **22** at locations corresponding to bolt holes **60** such that the plurality of bolts **17** may be inserted through the corresponding holes **70** to protrude through the bolt holes **60** in the flanges **32** and **34**. Each concentric recess has a diameter and depth such that when the bolts **17** are fully inserted into the holes **70**, the head portion (not shown) of each bolt **17** lies completely within the recess corresponding recess **71**. A conventional flat washer (not shown) may be placed about the bolt prior to insertion through the hole **70**, the recess **71** being dimensioned such that both the washer and the headed portion (not shown) of the bolts **17** are enclosed therein.

Referring now to FIGS. **2** and **3**, each bolt **17** has a threaded portion **74** with a length of approximately 1.5 inches, being slightly more than necessary to threadedly engage the corresponding nut **18** thereupon, when the bolt threaded portion **74** is fully extended through either the user platform **12** or the ground platform **14**, and the corresponding flange **32** or **34** as well as the support plate **19**.

Recesses **71** in the ground platform **14** are formed on the surface of the ground platform **14** adjacent the floor or ground surface **15**.

With the bolts **17** extending through corresponding holes in the user platform **12**, the ground platform **14**, the first flange **32**, the second flange **34** and corresponding pressure plates **19**, a nut **18** is threadedly engaged with each bolt **17** and tightened thereupon.

With the nuts **18** thus tightened, the flanges **32** and **34** are gripped securely between respective pressure plates **19** and the user platform **12** and ground platform **14** the pressure plates **19** functioning to generally uniformly distribute gripping forces about each flange.

Operation

The torsion board of the present invention can be used in several different modes of operation.

A first mode of operation promotes the balancing ability of the user.

Referring to FIG. **1**, the user exercises by placing his or her feet upon friction surfaces **28**, with the user's weight being distributed uniformly about the first axis **22**, such that no net bending moment such as shown at **82** in FIG. **2** is applied by the user platform **12** to the resilient interconnecting member **16**. The user shifts his or her weight relative to the first axis **22** to attempt to maintain the user platform **12** in a plane parallel to the ground surface **15**, as shown in closed outline **12** in FIG. **2**. If the user's position shifts slightly so that gravitational forces acting on the user have a net force component not coincident with the first axis **22**, a bending moment **82** as shown in FIG. **2** is applied by the user platform **12** to the resilient interconnecting member **16**, and the user platform **12** rotates about the second and third axes **23** and **24** to a tilted position as shown in broken outline at **12A** in FIG. **2**. The user may return the user platform **12** to a desired orientation as shown in closed outlined **12** in FIG. **2**, by again slightly shifting his or her body to reduce the bending moment **82**, it being desirable that users become proficient in making such adjustments.

Rotation of the user platform **12** about the second and third axes **23** and **24** in response to the bending moment **82** is limited to an amount determined by dimensions of the user platform **12**, the ground platform **14** and the resilient interconnecting member **16**. A portion of the perimeter edge **25** limits such motion when the edge **25** is brought thereby into contact with the ground platform **14** or possibly the ground surface **15** as shown in broken outline at **25A** in FIG. **2**. Expressed differently, the resilient interconnecting member **16**, the user platform **12** and the ground platform **14** are dimensioned such that the user platform **12** contacts the ground platform **14** during rotation of the user platform **12** about the second and third axes **23** and **24** to limit the rotation about the second and third axes **23** and **24** to a predetermined amount.

Continued practice by the user, including experimentation by changing foot placement on the user platform **12** at greater or lesser distances from the first axis **22**, will permit the user to undertake pivoting motion to exercise the user's torso and shoulders.

Pivoting motion is attained by rotating the user's shoulders, pelvis girdle and legs relative to each other, thus generating a torsion moment **84** as shown in FIG. **1** causing the user platform **12** to rotate about the first axis **22** relative to the ground platform **14**. The resilient interconnecting member **16** thus behaves as a torsion member, with the body portion **30** generating a torque urging the first flange **32** to rotate in a direction opposite to that of torsion moment **84** relative to the ground platform **14** and the second flange **34**.

The moment **84** generated by the user's partial body rotation, being transient, is eventually overcome by torsion forces applied by the resilient interconnecting member, and the user platform **12** is rotated in a direction opposite that imparted by the user's body rotation, thus restoring the user platform **12** to a position where second and third axes **23** and **24** are again aligned with the corresponding axis of the ground platform **14**, with rotation probably continuing past a point of such coincidence. The user may, through repeated and timely rotational shifts in his or her upper body, cause the user platform **12** and the user's feet and lower body portion to rotationally oscillate relative to the user's upper body portion at a rate and through an arc dependent upon the user's weight, distribution thereof about the user platform **12**, and the rotational moment applied by the user.

The user's body, in order to sustain such motion over a number of oscillations, must also be maintained at a position relative to the first axis **22** such that the bending moment **82** does not cause the user platform **12** to tilt to a position where it is brought into contact with either the ground platform **14** or the supporting ground surface **15**.

It will be appreciated that considerable practice on the part of the user will be necessary before the user can maintain his or her balance upon the board while sustaining rotational oscillation, and that while initial practice sessions will likely take place with the user's feet widely spaced upon the user platform **12**, use of the torsion board can be made more challenging by changing foot placement and orientation, and by increasing body motion to increase platform rotation about the first axis **22**.

It will also be appreciated that exercises such as step aerobics can be extended to include torsion boards incorporating the present invention. Such exercises involve rotation of the user's body with feet resting upon a fixed surface, for exercising knee, foot and other joints. The torsion board operates about three orthogonal axes, allowing the user to exercise joints through a broader variety of ranges of motion, while reducing much of the repetitive nature of step aerobic exercises. Traditional fixed surfaces require the user to balance on the ball of the foot, and to slidably rotate the foot upon the surface, which can result in either too little or too much torsional force being applied to leg and foot joints. An appropriately dimensioned torsion board of the present invention, used in place of the fixed surface, provides a predetermined resistance to rotation, and can thus provide a controlled and varied degrees of motion in the user's joints, and allow the muscles to function in variable degrees of stretch, with the user's foot firmly and flatly placed on the torsion board.

Alternatives

It will be appreciated by one skilled in the art that a resilient connecting member including a metallic coil spring having appropriate dimensions and being suitably affixed to the platforms **12** and **14** could be substituted for the urethane interconnecting member **16** disclosed herein. In a description of a second embodiment that follows, reference numbers having a suffix "B" are associated with apparatus identical to apparatus shown in FIGS. **1**, **2** and **3** having corresponding reference numbers without the suffix.

FIGS. **5** and **6**

Referring to FIGS. **5** and **6**, a second embodiment of the invention is shown generally at **90**. A coil spring **91** acts as a resilient interconnecting member and is affixed to the user platform **12** and the ground platform **14** with first and second clamping inserts **92** and a plurality of bolts **17B** and nuts **18B**. Coil spring **91** has a generally cylindrical shape and comprises a plurality of helical coils **94** and first and second end portions **95** and **96** formed across the ends of the spring **91**, the end portions lying in a plane generally perpendicular to, and intersecting, the spring longitudinal axis **97**. The spring **91** has an inside diameter **98** of approximately 5 inches and an outside diameter **100** of approximately 6 inches, the spring **91** being formed from a cylindrical steel rod having a diameter slightly less than 0.5 inches.

FIG. **7**

Referring to FIG. **7**, the clamping insert **92** has a disc shaped body **103** with a diameter **104** approximately equal to spring inside diameter **98**, for snugly engaging one or more coils **94**. The insert **92** has a proximal surface **105** with a central slot **106** formed therein, a distal end surface **107**, and a semi-annular lip **108** extending toward the proximal end surface **105** from the distal end surface **107**, and outward from the body portion **103**. The slot **106** is dimensioned to snugly receive the end portion **95** of the spring **91** therewithin. The insert **92** has a height **109** of approximately 0.75 inches, corresponding to a distance occupied by approximately 1½ coils **94** of the spring **91**. The lip **108** has a width **110** of approximately 0.5 inches, the semi-annular lip **108** thus having an outside diameter approximately equal the outside diameter **100** of the spring **91**. The inserts **92** are dimensioned to be received within the spring **91** with the end portions **95** snugly contained within respective recesses **106**, and the bodies **103** generally enclosed within the spring with the lips **108** bearing against a portion of the coils **94** at the ends of the spring **91**, such that the spring and the distal surfaces **107** of the insert **92** together form a body having a generally right cylindrical shape.

Referring back to FIG. **6**, nuts **18B** are embedded within the insert at locations corresponding to holes **71B** drilled in the user platform **12** and the ground platform **14**. Holes **112** are formed in the insert **92** such that bolts **17B** may be inserted therethrough and threadedly engage nuts **18***a*. Recesses **72B** correspond to recesses **72** discussed in connection with the first embodiment of the invention, bolts **17***a*, nuts **18B** and inserts **92** functioning to affix the coil spring **91** to the user platform **12** into the ground platform **14** such that the user platform **12** is maintained in a plane parallel to that of the ground platform **14**, and with the resilient interconnecting member, in this case the spring **91**, aligned upon axis **22B**.

It will be appreciated that in the second embodiment of the invention, the coil spring **91** and inserts **92** function as a support column able to support a user upon the user platform **12** such that the user platform **12** is maintained apart from the ground platform **14** by distance **29***b*, when the user's weight is distributed uniformly about axis **22B**.

Referring also to FIG. **2**, it will be appreciated that a user upon the user platform **12** in a torsion board **10B** comprising a coil spring resilient member, the user may shift his or her weight such that a moment **82B** is applied to the user platform **12** such that the coil spring **91** is bent along axis **22B**, such bending being limited by contact between the user platform **12** and the ground platform **14** in a manner similar to that discussed in connection with FIG. **2**.

Referring also to FIG. **1**, it will further be appreciated that a user applying a rotational moment **84B** to the user platform **12** will cause the spring **91** to undergo greater or lesser coiling, the spring applying an opposing moment, resistance of the spring **91** to moment **82B** and moment **84B** being generally proportional to bulk modulus and modulus of elasticity characteristics, respectively, of the material from which the spring **91** is formed.

It will be appreciated that while the resiliency characteristics of neoprene interconnecting member **16** and of the coil spring interconnecting member **91** will differ somewhat in their respective responses to moments **82** and **82B** and moments **84** and **84B**, a torsion board **10B** using a coil spring **91** may used to generally deliver the same benefits as available in the first embodiment.

It will be appreciated that a plurality of resilient interconnecting members may be substituted for the single member urethane cylinder or coil spring disclosed, to provide greater or lesser resistance to bending moments **82** and **82B**, and to torsion moments **84** and **84B**.

Thus, two specific embodiments of a torsion board are provided that allow a user to practice and improve balance, during different degrees of body rotation and position shifts, including mid-body exercise motion, for enhancing performance while participating in sports such as skiing, basketball and others.

While specific embodiments of the invention have been described and illustrated, such embodiments should be considered illustrative of the invention only and not as limiting the invention as construed in accordance with the accompanying claims.

What is claimed is:

1. A torsion board comprising:

a platform for supporting a user;

a ground contacting member for maintaining the torsion board generally in a fixed position and orientation with respect to a ground surface;

a generally cylindical, resilient interconnecting member between the ground contacting member and the platform having opposed ends formed with integral mount-

ing flanges to receive a plurality of fasteners for fixedly mounting the interconnecting member of the ground contacting member and the platform to permit pivoting the platform about first, second and third orthogonal axes due to twisting or bending of the resilient interconnecting member, said first axis being generally coincident with a gravitational axis along which gravitational forces act upon said user.

2. A torsion board as claimed in claim **1** wherein said resilient interconnecting member, said platform and said ground contacting member are dimensioned such that said platform contacts said ground contacting member during said rotation of said platform about said second and said third axis to limit said rotation thereabout to a predetermined amount.

3. A torsion board as claimed in claim **1** wherein said resilient interconnecting member is formed from an elastically deformable material.

4. A torsion board as claimed in claim **3** in which the elastically deformable material is urethane having a hardness in the range of about 50-90 on the Shore Durometer A Scale.

5. A torsion board as claimed in claim **1** wherein said interconnecting member has a hollow inner core defining an annular member with walls of generally uniform thickness.

6. A torsion board as claimed in claim **1** wherein said interconnecting member has a hollow inner core defining an annular member with walls of non-uniform thickness.

7. A torsion board as claimed in claim **1** wherein said interconnecting member is solid.

8. A torsion board as claimed in claim **3** wherein said resilient interconnecting member includes at least one coil spring.

9. A torsion board as claimed in claim **8** wherein said at least one coil spring includes a plurality of generally equal diameter coils coaxially aligned with said first axis.

10. A torsion board as claimed in claim **9** wherein said at least one coil spring is dimensioned to be substantially fully compressed when said user is balanced upon said platform.

11. A torsion board as claimed in claim **10** wherein said at least one coil spring is dimensioned to maintain said platform apart from said ground contacting member by a predetermined amount when said user is balanced upon said platform.

* * * * *

UNITED STATES PATENT AND TRADEMARK OFFICE

CERTIFICATE OF CORRECTION

PATENT NO. : 6,413,197 B2
DATED : July 2, 2002
INVENTOR(S) : Alexander McKechnie et al.

It is certified that error appears in the above-identified patent and that said Letters Patent is hereby corrected as shown below:

Title page,
Item [56], **References Cited**, FOREIGN PATENT DOCUMENTS, add the following:
-- GB 1 372 342 10/1974 --.

Signed and Sealed this

Fifteenth Day of October, 2002

Attest:

Attesting Officer

JAMES E. ROGAN
Director of the United States Patent and Trademark Office

UNITED STATES DISTRICT COURT
CENTRAL DISTRICT OF CALIFORNIA

NOTICE OF ASSIGNMENT TO UNITED STATES MAGISTRATE JUDGE FOR DISCOVERY

This case has been assigned to District Judge J. Spencer Letts and the assigned discovery Magistrate Judge is Victor B. Kenton.

The case number on all documents filed with the Court should read as follows:

CV11- 2642 JSL (VBKx)

Pursuant to General Order 05-07 of the United States District Court for the Central District of California, the Magistrate Judge has been designated to hear discovery related motions.

The United States District Judge assigned to this case will review all filed discovery motions and thereafter, on a case-by-case or motion-by-motion basis, may refer discovery related motions to the Magistrate Judge for hearing and determination

---

NOTICE TO COUNSEL

A copy of this notice must be served with the summons and complaint on all defendants (if a removal action is filed, a copy of this notice must be served on all plaintiffs).

Subsequent documents must be filed at the following location:

[X] **Western Division**
312 N. Spring St., Rm. G-8
Los Angeles, CA 90012

[ ] **Southern Division**
411 West Fourth St., Rm. 1-053
Santa Ana, CA 92701-4516

[ ] **Eastern Division**
3470 Twelfth St., Rm. 134
Riverside, CA 92501

Failure to file at the proper location will result in your documents being returned to you.

UNITED STATES DISTRICT COURT
CENTRAL DISTRICT OF CALIFORNIA

563704 B.C., LTD., a Canadian Corporation PLAINTIFF(S) v. REEBOK INTERNATIONAL, LTD., a corporation; (SEE ATTACHMENT) DEFENDANT(S).	CASE NUMBER CV11 02642 JSL VBKx **SUMMONS**

TO: DEFENDANT(S): REEBOK INTERNATIONAL, LTD., a corporation; (SEE ATTACHMENT)

A lawsuit has been filed against you.

Within 21 days after service of this summons on you (not counting the day you received it), you must serve on the plaintiff an answer to the attached [X] complaint [ ] _____ amended complaint [ ] counterclaim [ ] cross-claim or a motion under Rule 12 of the Federal Rules of Civil Procedure. The answer or motion must be served on the plaintiff's attorney, Reid Eric Dammann, whose address is Wasserman, Comden, Casselman & Esensten, 5567 Reseda Blvd., #330, Tarzana, CA 91357. If you fail to do so, judgment by default will be entered against you for the relief demanded in the complaint. You also must file your answer or motion with the court.

Clerk, U.S. District Court

Dated: MAR 29 2011

By: CHRISTOPHER POWERS
Deputy Clerk

(Seal of the Court)

[Use 60 days if the defendant is the United States or a United States agency, or is an officer or employee of the United States. Allowed 60 days by Rule 12(a)(3)].

PETITIONER/PLAINTIFF: 563704 B.C., LTD., a Canadian Corpora RESPONDENT/DEFENDANT: REEBOK INTERNATIONAL, LTD., a corpora	CASE NUMBER:

LIST OF ADDITIONAL DEFENDANTS ON SUMMONS:

POWER SYSTEMS, INC., a corporation;
DICK'S SPORTING GOODS, INC., a corporation;
M-F ATHLETIC COMPANY, INC., a corporation;
AMAZON.COM, INC., a corporation;
DIAMOND FITNESS SYSTEMS, INC., a corporation;
ESCAPE FITNESS LIMITED, a foreign corporation;
PHYSICAL COMPANY, LTD., a foreign corporation;
FIND IMPORT CORPORATION, dba ATAFA.COM, a corporation;
and DOES 1 through 10

Legal Solutions Plus

UNITED STATES DISTRICT COURT, CENTRAL DISTRICT OF CALIFORNIA

CIVIL COVER SHEET

I (a) PLAINTIFFS (Check box if you are representing yourself ☐)

563704 B.C., LTD., a Canadian Corporation

DEFENDANTS

REEBOK INTERNATIONAL, LTD., a corporation; etc., et al.

(b) Attorneys (Firm Name, Address and Telephone Number. If you are representing yourself, provide same.)

Reid Eric Dammann
WASSERMAN, COMDEN, CASSELMAN & ESENSTEN
5567 Reseda Boulevard, Suite 330
Post Office Box 7033
Tarzana, CA 91357-7033
(818) 705-6800

Attorneys (If Known)

II. BASIS OF JURISDICTION (Place an X in one box only.)

- ☐ 1 U.S. Government Plaintiff
- ☒ 3 Federal Question (U.S. Government Not a Party)
- ☐ 2 U.S. Government Defendant
- ☐ 4 Diversity (Indicate Citizenship of Parties in Item III)

III. CITIZENSHIP OF PRINCIPAL PARTIES - For Diversity Cases Only (Place an X in one box for plaintiff and one for defendant.)

	PTF	DEF		PTF	DEF
Citizen of This State	☐ 1	☐ 1	Incorporated or Principal Place of Business in this State	☐ 4	☐ 4
Citizen of Another State	☐ 2	☐ 2	Incorporated and Principal Place of Business in Another State	☐ 5	☐ 5
Citizen or Subject of a Foreign Country	☐ 3	☐ 3	Foreign Nation	☐ 6	☐ 6

IV. ORIGIN (Place an X in one box only.)

☒ 1 Original Proceeding ☐ 2 Removed from State Court ☐ 3 Remanded from Appellate Court ☐ 4 Reinstated or Reopened ☐ 5 Transferred from another district (specify): ☐ 6 Multi-District Litigation ☐ 7 Appeal to District Judge from Magistrate Judge

V. REQUESTED IN COMPLAINT: JURY DEMAND: ☒ Yes ☐ No (Check 'Yes' only if demanded in complaint.)

CLASS ACTION under F.R.C.P. 23: ☐ Yes ☒ No ☒ **MONEY DEMANDED IN COMPLAINT: $** To be determined at time of trial.

VI. CAUSE OF ACTION (Cite the U.S. Civil Statute under which you are filing and write a brief statement of cause. Do not cite jurisdictional statutes unless diversity.)

Patent infringement case.

VII. NATURE OF SUIT (Place an X in one box only.)

OTHER STATUTES
- ☐ 400 State Reapportionment
- ☐ 410 Antitrust
- ☐ 430 Banks and Banking
- ☐ 450 Commerce/ICC Rates/etc.
- ☐ 460 Deportation
- ☐ 470 Racketeer Influenced and Corrupt Organizations
- ☐ 480 Consumer Credit
- ☐ 490 Cable/Sat TV
- ☐ 810 Selective Service
- ☐ 850 Securities/Commodities/ Exchange
- ☐ 875 Customer Challenge 12 USC 3410
- ☐ 890 Other Statutory Actions
- ☐ 891 Agricultural Act
- ☐ 892 Economic Stabilization Act
- ☐ 893 Environmental Matters
- ☐ 894 Energy Allocation Act
- ☐ 895 Freedom of Info. Act
- ☐ 900 Appeal of Fee Determination Under Equal Access to Justice
- ☐ 950 Constitutionality of State Statutes

CONTRACT
- ☐ 110 Insurance
- ☐ 120 Marine
- ☐ 130 Miller Act
- ☐ 140 Negotiable Instrument
- ☐ 150 Recovery of Overpayment & Enforcement of Judgment
- ☐ 151 Medicare Act
- ☐ 152 Recovery of Defaulted Student Loan (Excl. Veterans)
- ☐ 153 Recovery of Overpayment of Veteran's Benefits
- ☐ 160 Stockholders' Suits
- ☐ 190 Other Contract
- ☐ 195 Contract Product Liability
- ☐ 196 Franchise

REAL PROPERTY
- ☐ 210 Land Condemnation
- ☐ 220 Foreclosure
- ☐ 230 Rent Lease & Ejectment
- ☐ 240 Torts to Land
- ☐ 245 Tort Product Liability
- ☐ 290 All Other Real Property

TORTS PERSONAL INJURY
- ☐ 310 Airplane
- ☐ 315 Airplane Product Liability
- ☐ 320 Assault, Libel & Slander
- ☐ 330 Fed. Employers' Liability
- ☐ 340 Marine
- ☐ 345 Marine Product Liability
- ☐ 350 Motor Vehicle
- ☐ 355 Motor Vehicle Product Liability
- ☐ 360 Other Personal Injury
- ☐ 362 Personal Injury-Med Malpractice
- ☐ 365 Personal Injury-Product Liability
- ☐ 368 Asbestos Personal Injury Product Liability

IMMIGRATION
- ☐ 462 Naturalization Application
- ☐ 463 Habeas Corpus-Alien Detainee
- ☐ 465 Other Immigration Actions

TORTS PERSONAL PROPERTY
- ☐ 370 Other Fraud
- ☐ 371 Truth in Lending
- ☐ 380 Other Personal Property Damage
- ☐ 385 Property Damage Product Liability

BANKRUPTCY
- ☐ 422 Appeal 28 USC 158
- ☐ 423 Withdrawal 28 USC 157

CIVIL RIGHTS
- ☐ 441 Voting
- ☐ 442 Employment
- ☐ 443 Housing/Accommodations
- ☐ 444 Welfare
- ☐ 445 American with Disabilities - Employment
- ☐ 446 American with Disabilities - Other
- ☐ 440 Other Civil Rights

PRISONER PETITIONS
- ☐ 510 Motions to Vacate Sentence Habeas Corpus
- ☐ 530 General
- ☐ 535 Death Penalty
- ☐ 540 Mandamus/ Other
- ☐ 550 Civil Rights
- ☐ 555 Prison Condition

FORFEITURE/ PENALTY
- ☐ 610 Agriculture
- ☐ 620 Other Food & Drug
- ☐ 625 Drug Related Seizure of Property 21 USC 881
- ☐ 630 Liquor Laws
- ☐ 640 R.R. & Truck
- ☐ 650 Airline Regs
- ☐ 660 Occupational Safety/Health
- ☐ 690 Other

LABOR
- ☐ 710 Fair Labor Standards Act
- ☐ 720 Labor/Mgmt. Relations
- ☐ 730 Labor/Mgmt. Reporting & Disclosure Act
- ☐ 740 Railway Labor Act
- ☐ 790 Other Labor Litigation
- ☐ 791 Empl. Ret. Inc. Security Act

PROPERTY RIGHTS
- ☐ 820 Copyrights
- ☒ 830 Patent
- ☐ 840 Trademark

SOCIAL SECURITY
- ☐ 861 HIA (1395ff)
- ☐ 862 Black Lung (923)
- ☐ 863 DIWC/DIWW (405(g))
- ☐ 864 SSID Title XVI
- ☐ 865 RSI (405(g))

FEDERAL TAX SUITS
- ☐ 870 Taxes (U.S. Plaintiff or Defendant)
- ☐ 871 IRS - Third Party 26 USC 7609

FOR OFFICE USE ONLY: Case Number: CV11 02642

AFTER COMPLETING THE FRONT SIDE OF FORM CV-71, COMPLETE THE INFORMATION REQUESTED BELOW.

UNITED STATES DISTRICT COURT, CENTRAL DISTRICT OF CALIFORNIA
CIVIL COVER SHEET

VIII(a). IDENTICAL CASES: Has this action been previously filed in this court and dismissed, remanded or closed? [X] No [ ] Yes

If yes, list case number(s): _____

VIII(b). RELATED CASES: Have any cases been previously filed in this court that are related to the present case? [X] No [ ] Yes

If yes, list case number(s): _____

Civil cases are deemed related if a previously filed case and the present case:

(Check all boxes that apply)

- [ ] A. Arise from the same or closely related transactions, happenings, or events; or
- [ ] B. Call for determination of the same or substantially related or similar questions of law and fact; or
- [ ] C. For other reasons would entail substantial duplication of labor if heard by different judges; or
- [ ] D. Involve the same patent, trademark or copyright, and one of the factors identified above in a, b or c also is present.

IX. VENUE: (When completing the following information, use an additional sheet if necessary.)

(a) List the County in this District; California County outside of this District; State if other than California; or Foreign Country, in which **EACH** named plaintiff resides.

[ ] Check here if the government, its agencies or employees is a named plaintiff. If this box is checked, go to item (b).

County in this District:*	California County outside of this District; State, if other than California; or Foreign Country
Los Angeles	Canadian corporation

(b) List the County in this District; California County outside of this District; State if other than California; or Foreign Country, in which **EACH** named defendant resides.

[ ] Check here if the government, its agencies or employees is a named defendant. If this box is checked, go to item (c).

County in this District:*	California County outside of this District; State, if other than California; or Foreign Country
Riverside	Tennessee, Pennsylvania, Rhode Island, Massachussetts, United Kingdom, Sacramento, CA

(c) List the County in this District; California County outside of this District; State if other than California; or Foreign Country, in which **EACH** claim arose.

Note: In land condemnation cases, use the location of the tract of land involved.

County in this District:*	California County outside of this District; State, if other than California; or Foreign Country
Los Angeles	

*** Los Angeles, Orange, San Bernardino, Riverside, Ventura, Santa Barbara, or San Luis Obispo Counties**

Note: In land condemnation cases, use the location of the tract of land involved

X. SIGNATURE OF ATTORNEY (OR PRO PER): _____ Date March 29, 2011

REID ERIC DAMMANN

Notice to Counsel/Parties: The CV-71 (JS-44) Civil Cover Sheet and the information contained herein neither replace nor supplement the filing and service of pleadings or other papers as required by law. This form, approved by the Judicial Conference of the United States in September 1974, is required pursuant to Local Rule 3-1 is not filed but is used by the Clerk of the Court for the purpose of statistics, venue and initiating the civil docket sheet. (For more detailed instructions, see separate instructions sheet.)

Key to Statistical codes relating to Social Security Cases:

Nature of Suit Code	Abbreviation	Substantive Statement of Cause of Action
861	HIA	All claims for health insurance benefits (Medicare) under Title 18, Part A, of the Social Security Act, as amended. Also, include claims by hospitals, skilled nursing facilities, etc., for certification as providers of services under the program. (42 U.S.C. 1935FF(b))
862	BL	All claims for "Black Lung" benefits under Title 4, Part B, of the Federal Coal Mine Health and Safety Act of 1969. (30 U.S.C. 923)
863	DIWC	All claims filed by insured workers for disability insurance benefits under Title 2 of the Social Security Act, as amended; plus all claims filed for child's insurance benefits based on disability. (42 U.S.C. 405(g))
863	DIWW	All claims filed for widows or widowers insurance benefits based on disability under Title 2 of the Social Security Act, as amended. (42 U.S.C. 405(g))
864	SSID	All claims for supplemental security income payments based upon disability filed under Title 16 of the Social Security Act, as amended.
865	RSI	All claims for retirement (old age) and survivors benefits under Title 2 of the Social Security Act, as amended. (42 U.S.C. (g))