Patrick F. Bright (State Bar #68709)
WAGNER, ANDERSON & BRIGHT LLP
3541Ocean View Boulevard
Glendale, California 91208
(818) 249-9300
(818) 249-9335 (fax)
E-Mail: pbright@patentattorney.us

Attorneys for Plaintiff SmartMetric Inc.,
a Nevada corporation

FILED
2010 DEC -7 PM 3:34
CLERK U.S. DISTRICT COURT
CENTRAL DIST. OF CAL.
LOS ANGELES

UNITED STATES DISTRICT COURT

CENTRAL DISTRICT OF CALIFORNIA

SMARTMETRIC INC., a Nevada corporation,

Plaintiff,

vs.

AMERICAN EXPRESS COMPANY, a New York Corporation,

Defendant.

CASE NO. CV 10 9371 JHN (MANx)

COMPLAINT FOR INFRINGEMENT OF U. S. PATENT 6,792,464

JURY TRIAL DEMANDED

1. Plaintiff SmartMetric Inc. ("SMME"), a Nevada Corporation, for its complaint, and demanding trial by jury under Rule 38, Fed. R. Civ. P., and Local Rule 38-1, alleges that Defendant American Express Company ("AX") is infringing U.S. Patent 6,792,464 (the " '464 patent"), in this judicial district, by selling, offering to sell and using contactless card systems, namely, AX's ExpressPay that uses data cards that, when passed near to a reader, establish connection to a network (the "Systems"), that infringe at least claims 1 and 14 of the '464 patent.

2. Claim 1 of the '464 patent reads as follows: "A computer system for allowing a user to automatically access one of a plurality of network service providers which require information specific to the user and/or the network service provider to be accessed, the computer system comprising: a data card which contains the information specific to the user and/or the network service provider to be accessed; a data card reader adapted to access at least part of the information contained on the data card when the data card is in communication therewith; a data processor in communication with the data card reader and adapted to be connected to a network; and an application program resident on the data processor, said application program being configured to automatically retrieve at least part of the information contained on the data card when the data card is in communication with said data card reader and to use said information to gain access to one of the plurality of network service providers via the network by using one of a default access number indicating a designated network service provider and a local access number from a database containing a list of access numbers or the plurality of network service providers along with corresponding location information for each access number in the list, wherein said application program is immediately triggered upon insertion of said data card into said data card reader." The accused

system is such a computer system. This system permits users with contactless data cards, which contain information specific to the users and/or the network service provider to be accessed, to access such networks by passing such data cards near to a data card reader that is part of such systems. These systems include data processors in communication with the data card readers, and application programs resident on the processors, as called for in claim 1. This program automatically retrieves at least part of the information contained on the data cards when the cards are in communication with the readers, and uses this information to gain access to one of the plurality of network service providers via the network, using one of a default access number indicating a designated network service provider and a local access number from a database containing a list of access numbers or the plurality of network service providers along with corresponding location information for each access number in the list, such that the programs are immediately triggered upon insertion of such cards into such readers, meaning when such cards are passed near to such readers.

3. Claim 14 of the '464 patent reads as follows: A method for allowing a user to automatically access one of a plurality of network service providers which require information specific to the user and/or the

network service provider to be accessed, comprising the steps of: configuring an application program resident on a data processor to automatically retrieve at least part of the information specific to the user and/or the network service provider to be accessed contained on a data card when said data card is in communication with a data card reader and to use said information to gain access to one of the plurality of network service providers via a network by using one of a default access number indicating a designated network service provider and a local access number from a database containing a list of access numbers for the plurality of network service providers along with corresponding location information for each access number in the list; and immediately triggering said application program upon insertion of said data card into said data card reader." The accused system embodies methods that allow a user to automatically access one of a plurality of network service providers which require information specific to the user and/or the network service provider to be accessed. These methods configure an application program, resident on a data processor, to automatically retrieve at least part of the information specific to the user and/or the network service provider to be accessed contained on a data card when such a card is in communication with, e.g., passes near to, a data card reader. The

program uses such information to gain access to one of the plurality of network service providers via a network by using one of a default access number indicating a designated network service provider and a local access number from a database containing a list of access numbers for the plurality of network service providers along with corresponding location information for each access number in the list. These methods immediately trigger the application program, upon insertion of the data card into the data card reader. That is, these methods permit users with contactless data cards, which contain information specific to the users and/or the network service provider to be accessed, to access such networks by passing such data cards near to a data card reader that is part of such systems.

4. Claim 19 of the '464 patent, which depends indirectly on Claim 14 and directly on claim 18, reads as follows: "The method as set forth in claim 18, further comprising the steps of: communicating the information between said data card and said data card reader through a first antenna embedded inside said data card and a second antenna embedded inside said data card reader."

5. AX's accused system provides for automatic access to a network by passing data cards near to a data card reader that is part of such systems, as called for in claims 1 and 14 of the '464 patent.

6. This is a civil action for patent infringement and arises under, among other things, the United States Patent Laws, 35 U. S. C. section 101 et seq. Jurisdiction is therefore based upon 28 U. S. C. sections 1331 and 1338(a), providing for federal question jurisdiction of patent infringement actions and exclusive jurisdiction of patent infringement actions in the U. S. district courts.

7. Plaintiff SMME is informed and believes, and thereon alleges, that venue in this court is proper under 28 U. S. C. section 1391(b)-(c) and section 1400(b) because the acts of patent infringement alleged herein took place, at least in part, within this judicial district.

8. Plaintiff SMME is a corporation organized and existing under the laws of the State of Nevada and has a place of business at Bay Harbour, FL.

9. Defendant AX is, on information and belief, a corporation of the State of New York, and has one or more places of business in California.

10. On September 14, 2004, the U. S. Patent and Trademark Office duly and lawfully issued the '464 patent under the title SYSTEM FOR AUTOMATIC CONNECTION TO A NETWORK. A true and correct copy of the '464 patent is attached hereto as Exhibit 1. By assignment, SMME is the owner of the '464 patent.

11. Defendant AX has infringed the '464 patent by selling, and offering for sale, systems claimed in the '464 patent in this judicial district and elsewhere in the United States. On information and belief, this infringement will continue unless enjoined by this court.

12. Defendant AX's infringement of the '464 patent has damaged SMME in an unknown amount. These damages continue to grow as AX's infringement continues. Under Section 284 of Title 35 of the United States Code, SMME seeks damages adequate to compensate for this infringement in an amount no less than a reasonable royalty, together with interest and costs affixed by the Court.

13. Defendant AX's continuing infringement of the '464 patent has caused and continues to cause irreparable harm to SMME, including impairing the value of the '464 patent in an amount yet to be determined. Pursuant to Section 283 of Title 35 of the United States Code, SMME seeks a preliminary and a permanent injunction against further infringement of the '464 patent.

. **PRAYER FOR RELIEF**

WHEREFORE, SMME prays for the following relief from this court against Defendant AX:

(a) For an order, pursuant to 35 U. S. C. section 271, declaring that Defendant's accused system has infringed one or more claims of the '464 patent.

(b) A preliminary and a permanent injunction against Defendant, prohibiting AX from further infringement of the '464 patent.

(c) An award of the actual damages SMME has suffered by reason of the infringement charged in this Complaint, in an amount not less than a reasonable royalty on AX's infringement of the '464 patent.

(d) An award to plaintiff SMME of their costs herein.

(e) Such further relief as the Court may deem just and proper.

//

Dated: December 7, 2010

WAGNER, ANDERSON & BRIGHT LLP

Patrick F. Bright

by: 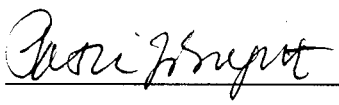

Patrick F. Bright

DEMAND FOR JURY TRIAL

Pursuant to Rule 38(b) of the Federal Rules of Civil Procedure, and Local Rule 38-1, plaintiff SMME does hereby demand trial by jury of each and every issue or claim as to which it is entitled to trial by jury under Rule 38(a) of the Federal Rules of Civil Procedure.

//

Dated: December 7, 2010

WAGNER, ANDERSON & BRIGHT LLP

Patrick F. Bright

by: _____

Patrick F. Bright

US006792464B2

(12) **United States Patent**
Hendrick

(10) **Patent No.: US 6,792,464 B2**
(45) **Date of Patent: Sep. 14, 2004**

(54) **SYSTEM FOR AUTOMATIC CONNECTION TO A NETWORK**

(76) Inventor: **Colin Hendrick**, 289 Kingston Ave., Brooklyn, NY (US) 11213

(*) Notice: Subject to any disclaimer, the term of this patent is extended or adjusted under 35 U.S.C. 154(b) by 625 days.

(21) Appl. No.: **09/784,851**

(22) Filed: **Feb. 15, 2001**

(65) **Prior Publication Data**

US 2001/0025878 A1 Oct. 4, 2001

Related U.S. Application Data

(63) Continuation of application No. PCT/US00/04250, filed on Feb. 18, 2000.

(30) **Foreign Application Priority Data**

Feb. 18, 1999 (AU) 17394/99

(51) **Int. Cl.**[7] **G06F 13/00**
(52) **U.S. Cl.** **709/227**; 709/217
(58) **Field of Search** 709/200, 201, 709/203, 217, 218, 219, 220, 221, 222, 223, 224, 227

(56) **References Cited**

U.S. PATENT DOCUMENTS

5,880,769 A * 3/1999 Nemirofsky et al. 725/139
5,995,105 A * 11/1999 Reber et al. 345/835
6,334,109 B1 * 12/2001 Kanevsky et al. 705/14
6,359,699 B1 * 3/2002 Yoneta et al. 358/1.16
6,385,729 B1 * 5/2002 DiGiorgio et al. 713/201
6,609,658 B1 * 8/2003 Sehr 235/384

* cited by examiner

Primary Examiner—Moustafa M. Meky
(74) *Attorney, Agent, or Firm*—Cooper & Dunham LLP

(57) **ABSTRACT**

A computer system (**10**) that allows a user to automatically access one of a plurality of Internet Service Providers which require information specific to the user and/or the ISP (**12**) to be accessed. A smart card (**14**) contains the information specific to the user and/or the ISP (**12**) to be accessed, and a smart card reader (**18**) reads the information contained on the smart card (**14**) when inserted into the recess **16** of the smart card reader (**18**). A computer (**24**) is provided having a Central Processing Unit CPU (**22**) that is in communication with the smart card reader (**18**) and which is also adapted to be connected to the ISP (**12**) via telephone line (**30**). An application program (**26**) resides on the CPU (**22**) and is configured to automatically retrieve the information contained on the smart card (**14**) when it is inserted into the smart card reader (**18**) and to use that information to gain access to one of the plurality of ISPs via the network by using one of a default access number indicating a designated ISP (**12**) and a local access number from a database (**28**) containing a list of access numbers for the plurality of ISPs along with corresponding location information for each access number in the list. The computer system (**10**) may further comprise an online advertising server (**82**) for serving advertisement information to the user based on profile information of the information specific to the user contained on the smart card (**14**).

25 Claims, 7 Drawing Sheets

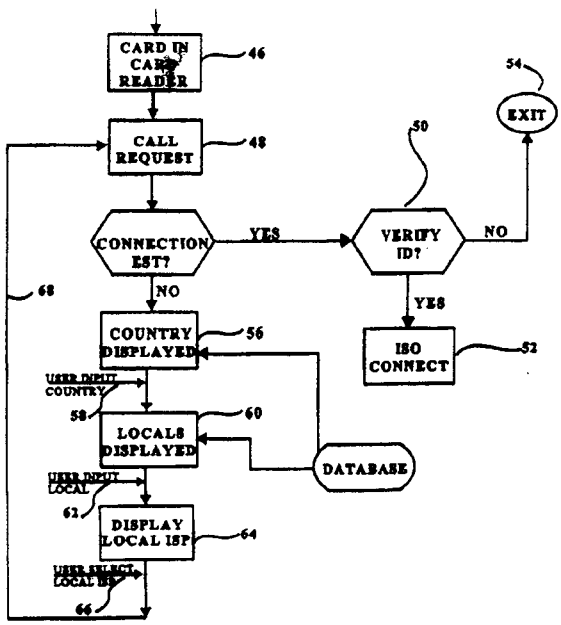

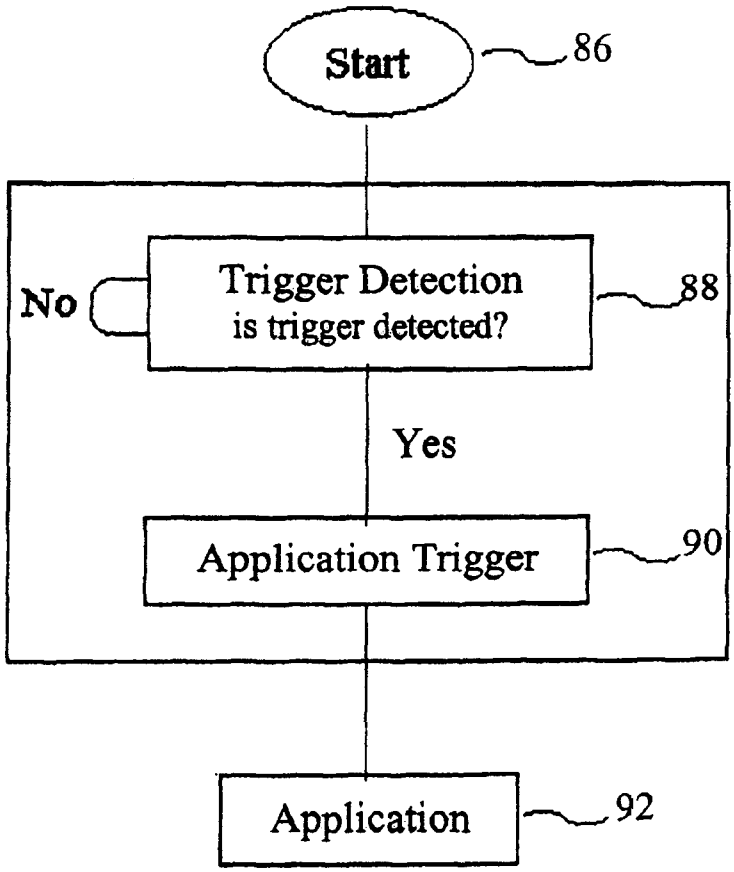
Start
86
No
Trigger Detection
is trigger detected?
88
Yes
Application Trigger
90
Application
92

Fig. 1

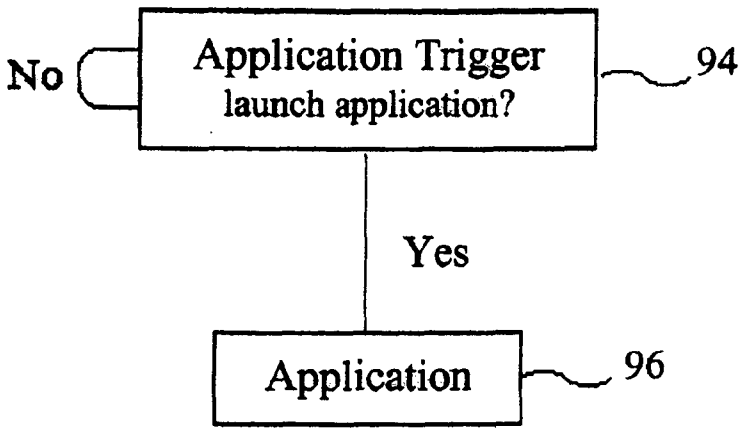
No
Application Trigger
launch application?
94
Yes
Application
96

Fig. 2

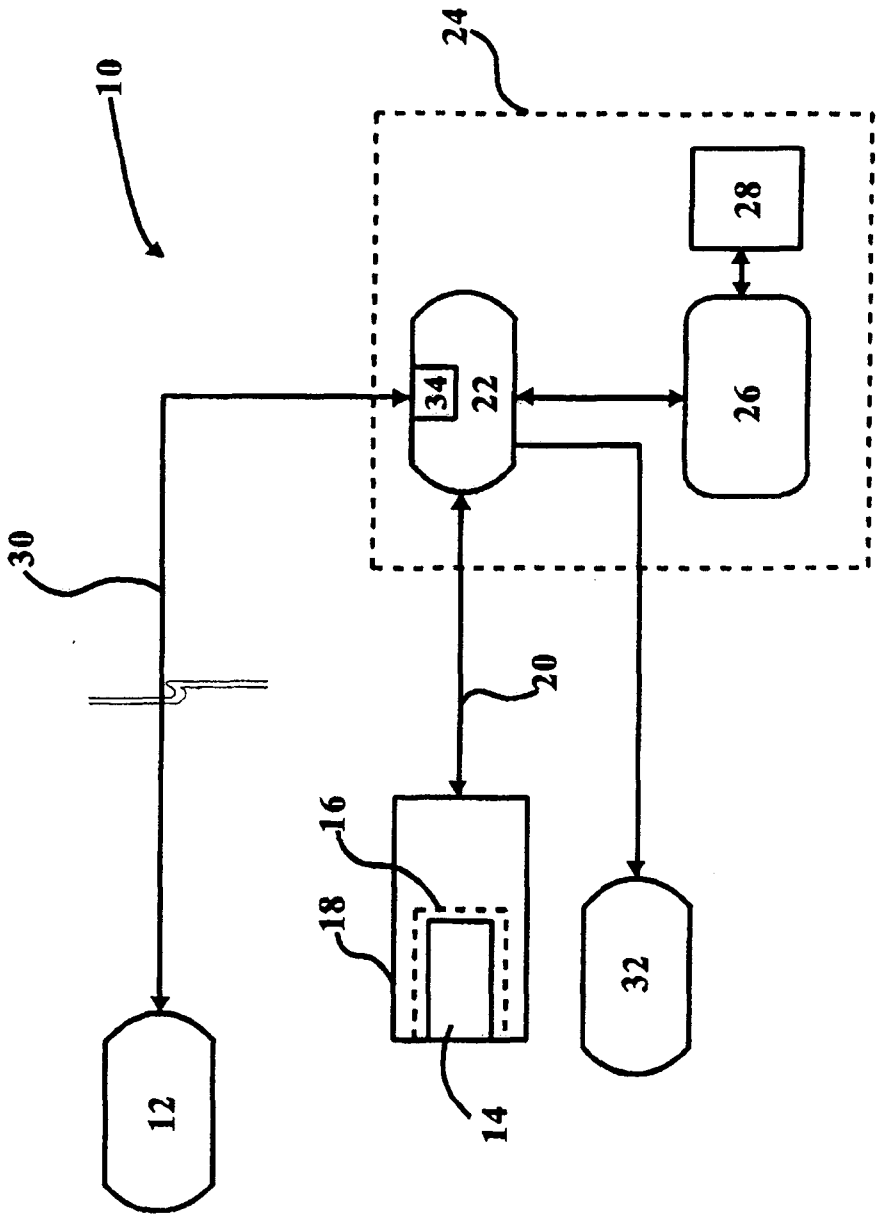

Fig. 3

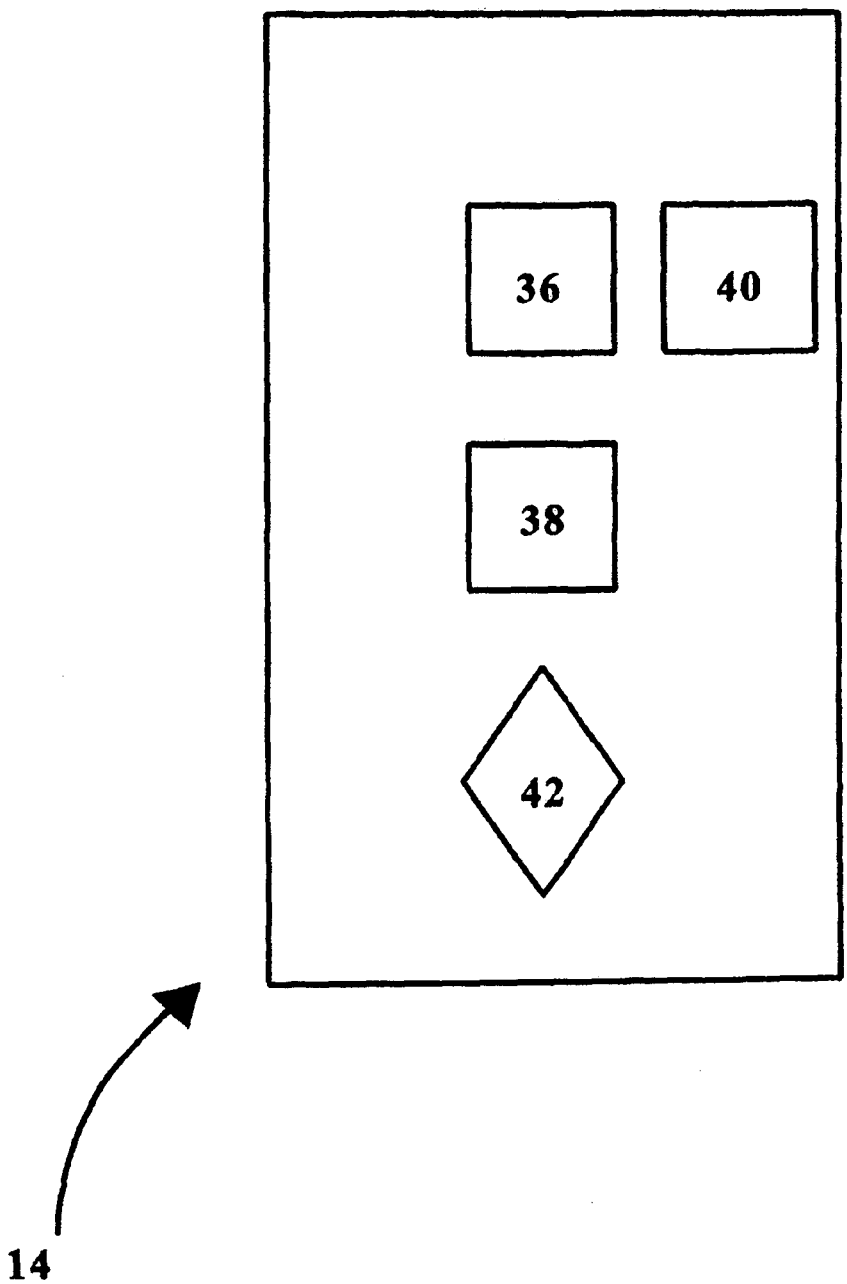

Fig. 4

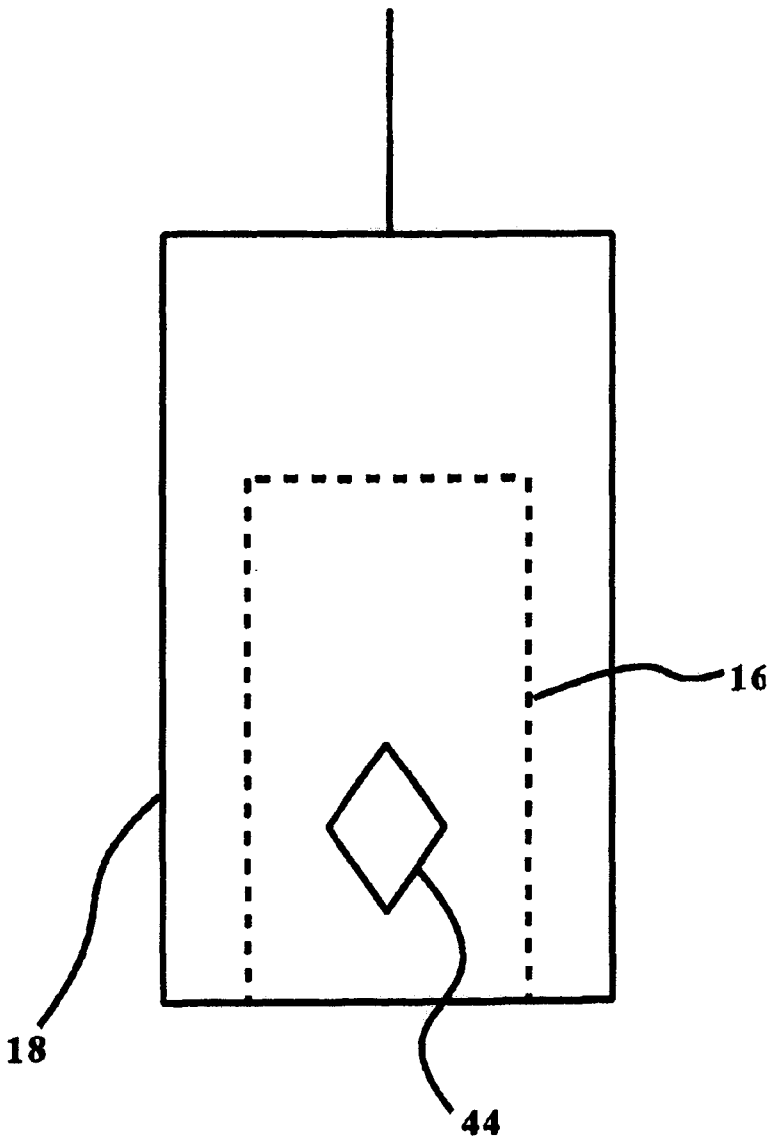

Fig. 5

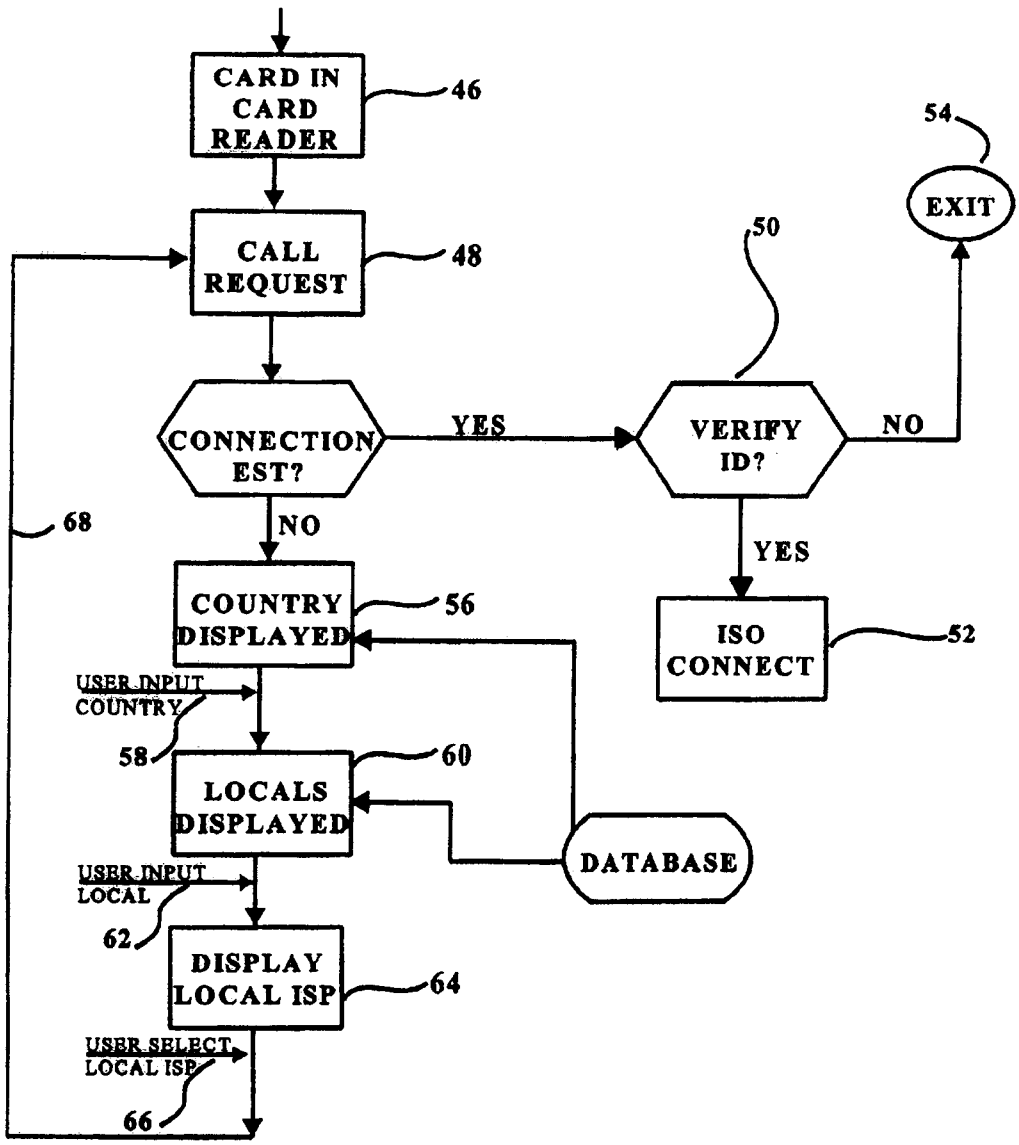
CARD IN CARD READER
46
CALL REQUEST
48
CONNECTION EST?
YES
VERIFY ID?
50
NO
EXIT
54
NO
68
YES
COUNTRY DISPLAYED
56
ISO CONNECT
52
USER INPUT COUNTRY
58
LOCALS DISPLAYED
60
DATABASE
USER INPUT LOCAL
62
DISPLAY LOCAL ISP
64
USER SELECT LOCAL ISP
66

Fig. 6

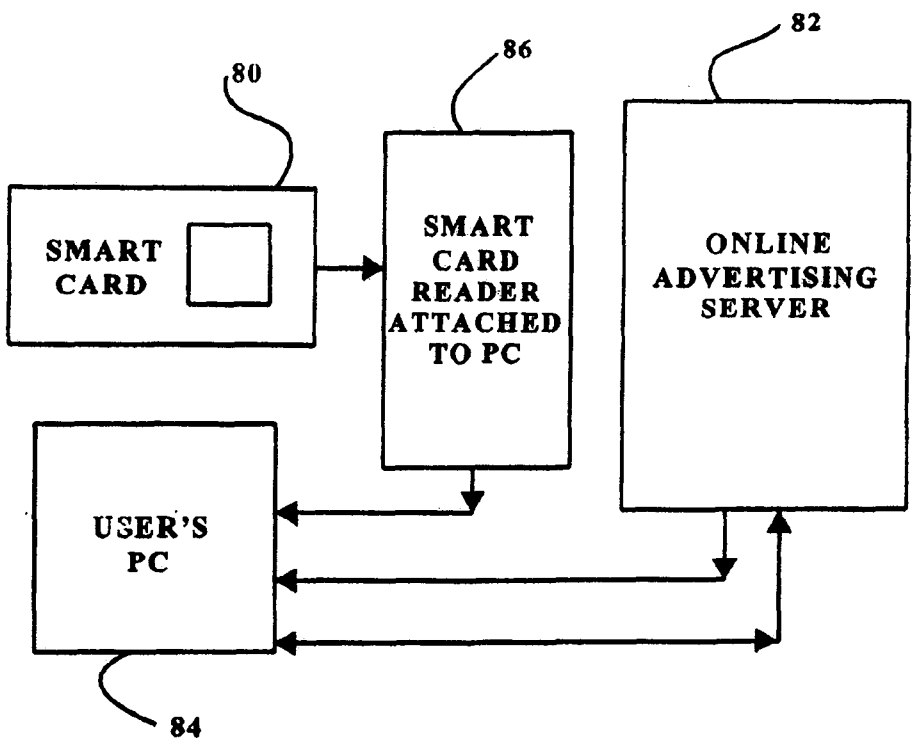
80
86
82
SMART CARD
SMART CARD READER ATTACHED TO PC
ONLINE ADVERTISING SERVER
USER'S PC
84

Fig. 7

SYSTEM FOR AUTOMATIC CONNECTION TO A NETWORK

This application is a continuation of PCT International Application No. PCT/US00/04250, filed Feb. 18, 2000, designating the United States of America, which claims priority of Australian Application No. AU 17394/99 (PP9281), filed Feb. 18, 1999, the contents of which are hereby incorporated by reference into the present application.

TECHNICAL FIELD

The present invention relates to a computer system that allows a user to automatically connect to a network service provider, and more particularly, to a system and method which allows a user to automatically connect to a network service provider by using a data card (i.e., a "smart card"). A smart card is a card that is approximately the size of a credit card and stores electronic data on a microchip for use in a variety of applications. The present invention also relates to an online advertisement system that accesses user profile information stored on a smart card to provide advertisements specifically tailored to the user's profile.

BACKGROUND ART

With the increasing use of information technology to access and exchange information over a network, in addition to the emergence of commercial transactions which have been taking place over open networks such as the internet, it has become necessary to store information (particularly about a user) in a secure manner. One method of securing information is by a smart card. A smart card is approximately the size of a conventional credit card; however, instead of having a magnetic strip which stores data on the card, smart cards usually have a microchip embedded within their structure. The microchip stores information in the form of electronic data which may be of use to the smart card user.

Essentially, smart cards can be categorized into two distinct types, namely "contact smart cards" and "contactless smart cards." Smart card readers are devices that read information contained in a smart card microchip. They are typically connected to a computer so that information in the smart card chip can be relayed to the computer.

"Contact" smart cards are typically inserted into a smart card reader. These cards have a microchip on one side of the card which makes contact with an electrical connector contained within the smart card reader. Data is exchanged between the chip on the smart card and the electrical connector of the smart card reader.

"Contactless" smart cards do not have an exposed chip on one side of the card, but have an antenna embedded within the card itself. The antenna transmits information to a coupler unit or "smart card reader" which is also fitted with an antenna. The antenna allows information to be exchanged without physical contact having to be made between the smart card chip and the smart card reader.

Typically when a smart card is inserted into a reader mechanism, the embedded chip transmits a message to the host machine on which the reader is attached. This message typically acknowledges card insertion into the reader mechanism.

Existing applications that utilize the smart card are launched by a human user after the smart card is inserted or before the smart card is inserted. In the general case of application launch before card insertion a prompt within a typical application requires users to insert and then acknowledge card insertion through a prompt. In the general case of application launch after card insertion a similar acknowledgment is also required.

Internet Service Providers (ISPs) or Internet Access Providers (IAPS) are companies that provide individuals and companies with access to the internet and to other related services, such as website building and hosting. A user of an internet service typically accesses the ISP from his or her computer via a telephone line so as to gain access to the internet. The ISP usually requires the user to enter particular information in relation to the user, such as a login name and password which is then checked against the ISP's database to verify that the user is registered with the ISP. Traditionally ISPs have been located within their own regional areas and therefore the user typically dials a local number to access the ISP.

Problems can occur when the user uses his or her computer to log on to the ISP (e.g., such as on a business trip using a laptop computer) and the number recorded in the computer for the ISP may be different (i.e., different area and/or country code). It is then necessary for the user to enter in the area code (or country number if he or she is overseas) for the ISP and pay for a long distance call. Alternatively, the same ISP may have a local number within the particular locale in which the user is located at a particular time. However, the user typically has to physically search for the local ISP number in the particular locale in which he or she is located. Furthermore, delays in the time it takes for a user to access the internet can result whenever the user is in a different geographic location or happens to use a different computer.

Moreover, there is a need for a simple way to provide advertisements to a user which are specifically directed to that user's tastes and characteristics.

DISCLOSURE OF INVENTION

The present invention is directed to overcoming the problems in the prior art regarding the inconvenience of the user having to physically search for the local ISP number in the particular locale in which he or she is located, or the increased cost in paying for a long distance call if this search is not performed, or the delays in time it takes for a user to access the internet when the user is in a different geographic location or happens to use a different computer.

The present invention is also directed to an online advertisement system that accesses user profile information stored on a smart card to provide advertisements specifically tailored to the user's profile.

According to one embodiment of the present invention, there is disclosed a computer system for allowing a user to automatically access one of a plurality of network service providers which require information specific to the user and/or the network service provider to be accessed, the computer system comprising:

a data card which contains the information specific to either the user and/or the network service provider to be accessed;

a data card reader adapted to access at least part of the information contained on the data card when the data card is in communication therewith;

a data processor in communication with the data card reader and adapted to be connected to a network;

an application program resident on the data processor, the application program being configured to automatically retrieve at least part of the information contained on the

data card when the data card is in communication with said data card reader and to use the information to gain access to one of the plurality of network service providers via the network by using one of a default access number indicating a designated network service provider and a local access number from a database containing a list of access numbers for the plurality of network service providers along with corresponding location information for each access number in the list,

wherein the application program is immediately triggered upon insertion of the data card into the data card reader.

The data card typically comprises a microprocessor for processing the information stored within the data card, a memory component which enables the information to be stored within the data card and a communications interface for transferring the information from the data card to the data card reader.

The communications interface may include an antenna embedded inside the data card so as to communicate the information between the data card and the data card reader. In such an embodiment, the data card reader also has an antenna embedded inside so as to receive/relay information from/to the data card.

Alternatively, the communications interface may include a contact connector and the data card reader may include electrical connectors so that information can be received/relayed from/to the data card when the contact and the electrical connectors are in physical contact. The communications interface of the data card may make contact with a communications interface located on the data card reader. In some embodiments of the invention, the data card is a smart card and the data card reader is a smart card reader. The data card may also contain a battery for storage of power received from the data card reader when it is connected thereto.

Preferably, the data card is inserted into a recess provided within the data card reader. Typically, when the data card is inside the data card reader, the electrical connectors on the data card reader detect that a data card is inserted in the data card reader and an activation code is generated by the microprocessor and is sent to the data processor. The activation code is then sent to the application program.

When the activation code is received by the data processor, the application program instructs the CPU to generate a code to establish a link with the network service provider by instructing a modem to dial a default number to access the network service provider via the network. Hence, by inserting the smart card into the smart card reader, a connection is automatically established with the network service provider. The default number may be the number of a network service provider local to the user. If the dial-up sequence is via a network such as a telephone line, the phone number of the network service provider may be part of the specific information contained on the data card.

If the user is located in another city or indeed in another country, there will be a different country and area code required and the number dialed by the application program will not connect to the network service provider. In such a situation, the application program will also include a logic code which determines that a connection has not been made and shall generate a message to the user requesting that they input the country and/or the city in which they are currently located.

Optionally, the application program may contain a database detailing a list of the countries, the associated locale by area codes within those countries and may also include a list of network service providers within each country and local area location. In some embodiments of the invention, the message generated by the application program may generate from the database, the list of countries on a graphical display. Typically the user will then select the country he or she is located in at a particular time. Once the country is selected, the application may then generate from the database, a list of locales by area code associated with the selected country. The user then selects the locale in which he or she is located. The application program then notes the locale and retrieves from the database, the country code and/or the area code of the location.

Alternatively, the database may be stored on a memory means such as a compact disc read only memory (CD ROM) accessible by the data processor. Or, the database may be stored in a remote server accessible by the data processor.

In one embodiment, once the application program knows the locale of a user, the number of the nearest network service provider located in the locale is dialed by the data processor via the modem. In other embodiments, the user may have a designated network service provider and the application program then dials the number of the designated network service provider and the appropriate country and area code. Optionally, the application program may provide the user with a choice as to whether they wish to use their designated network service provider or a network service provider in their present locale. Furthermore, the application program may provide the user with a choice of network service providers from which to choose in a particular location.

Typically, the network service provider is an Internet Service Provider (ISP) or an Internet Access Provider (IAP) which provides internet services to the user. Alternatively, the network service provider might be a proxy server of an intranet.

The network which the user uses to access the ISP does not have to be a telephone line but can be any sort of telecommunications network such as a telecommunications cable or telephony.

In some examples of the invention, the specific information contained on the data card includes the user's login identification and password which is required to access the ISP. The specific information may, however, contain other pieces of information, such as verification codes or encrypted data relating to the user's finances or network preferences. This information can be used, for example, in the embodiment of the invention described in detail below wherein an online advertisement system accesses user profile information stored on a smart card to provide advertisements specifically tailored to the user's profile. This information may be inputted by the user upon initial use of the data card by having the user fill out a series of information fields. The personal information may then be encrypted and stored on the data card.

In some embodiments of the invention, the data processor is preferably a personal computer which includes or is connected to a modem which can access the internet. In other embodiments of the invention, the data processor may be housed within the data card reader, which may also include a graphical interface for the user to view information contained on the network.

According to another aspect of the present invention, there is disclosed a method for allowing a user to automatically access one of a plurality of network service providers which require information specific to the user and/or the network service provider to be accessed, comprising the steps of:

configuring an application program resident on a data processor to automatically retrieve at least part of the infor-

mation specific to the user and/or the network service provider to be accessed contained on a data card when the data card is in communication with a data card reader and to use the information to gain access to one of the plurality of network service providers via a network by using one of a default access number indicating a designated network service provider and a local access number from a database containing a list of access numbers for the plurality of network service providers along with corresponding location information for each access number in the list; and

immediately triggering the application program upon insertion of the data card into the data card reader.

In another embodiment of the present invention, an online advertisement system provides advertisements to a user that are specifically tailored to the user's profile. The online advertisement system comprises:

a data card for storing information specific to the user, including user profile information;

a data card reader for accessing the information contained on the data card when the data card is in communication therewith;

a data processor in communication with the data card reader; and

an online advertising server connected to the data processor for serving the advertisements to the user, wherein the advertisements are specifically tailored to the user based on the user profile information.

In another embodiment of the present invention, a data card is provided for allowing a user to automatically access one of a plurality of network service providers, comprising:

a memory for storing information specific to the user and/or the plurality of network service providers and for storing an application program which is immediately triggered and which automatically uses the information to access one of the network service providers via a network when the data card is in communication with a data card reader that is communicating with a data processor.

In another embopdiment of the present invention, a method is provided for automatically transferring information to a network, comprising the steps of storing the information on a data card, connecting to the network, and automatically uploading the information stored on the data card to the network upon connection thereto.

BRIEF DESCRIPTION OF DRAWINGS

FIG. **1** shows the logic for the smart card application trigger process;

FIG. **2** shows a trigger process wherein the application trigger polls a variable;

FIG. **3** shows an embodiment of the computer system in accordance with the present invention;

FIG. **4** shows an embodiment of the data card which is used in the data card reader of FIG. **3**;

FIG. **5** shows in more detail the data card reader of FIG. **3**;

FIG. **6** shows a number of stages which the system uses to connect a user automatically to the internet, in accordance with the present invention; and

FIG. **7** shows a system including a remote server for serving specific advertisements to the user.

BEST MODE FOR CARRYING OUT THE INVENTION

It is to be understood that the invention disclosed and defined herein extends to all alternative combinations of two or more of the individual features mentioned or evident from the text or drawings. All of these different combinations constitute various alternative aspects of the invention.

The foregoing describes embodiments of the invention, and modifications obvious to those skilled in the art can be made thereto without departing from the scope of the present invention.

FIG. **1** shows the logic for the smart card application trigger process. This diagram describes how a host application is launched upon insertion of the smart card. There are many different possible host applications. For example, the application trigger process could be used to access data sources through a network, launch local and remote applications for a particular user, boot a computing device, restrict access to computing platforms, allow entry into building facilities, or start a combustion or non-fossil engine.

As shown in FIG. **1**, upon system and/or detection software power-up, boot, or reset as denoted by Start **86**, the system moves to the trigger detection step **88** to wait for insertion of the smart card. Upon insertion of the card, data representing card insertion is sent to the trigger detector to be detected by the trigger detection step **88**. Once the trigger is detected (i.e., the smart card is inserted), the application trigger **90** causes the host application to be launched.

FIG. **2** shows an alternative method for launching a host application upon insertion of the smart card. In FIG. **2**, the trigger detection process is a continually running process that detects card insertion through smart card access attempts. The application trigger **94** polls an O/S boolean variable that is set to either true or false upon trigger detection. Upon detecting the appropriate true/false value of the variable denoting insertion of the smart card, the application trigger **94** launches the application **96**.

The launched application can be stored on the smart card itself, and the trigger detector and application trigger can be integrated into the same module. For example, upon trigger detection an application may be launched on the card by the application trigger logic to perform authentication processes on the smart card. Authentication is the verification of user identity through a personal identification number (PIN) stored on the host machine. For example, the application launched by the application trigger process may ask for a PIN from the user. To avoid this step, the user could store his or her PIN on the host machine. The trigger detector would then read data from a file with the stored PIN before starting the application trigger to verify the PIN. Alternatively, the PIN reading application could be launched as normal without prompting the user for a PIN but instead reading the PIN number from a file.

This process is distinguishable from the process used by magnetic strip reading automated teller machines (ATMs) since there is no embedded-chip present in such devices. ATMs are mechanical devices that perform a reading operation when a mechanical latch or switch movement is detected upon card insertion.

Next, the part of the system relating to automatic connection to a network according to the present invention will be described. Referring to FIG. **3**, there is shown a computer system **10** which allows a user to automatically access a network service provider in the form of ISP **12**. The ISP **12** requires the user's login identification and a password before the ISP **12** will provide access to the internet. This information is contained on a data card in the form of smart card **14** shown in FIG. **3** as being located within recess **16** that is within a data card reader in the form of smart card reader **18**.

Upon first use of the smart card **14**, the user may be required to input his or her personal information into the system using, for example, a series of information fields. This information is then encrypted and transferred onto the smart card **14**.

The smart card reader **18** is adapted to read the login and password information for the ISP **12** that is contained on smart card **14**. The smart card reader **18** is connected via cable **20** to a data processor in the form of central processing unit (CPU) **22** located within computer **24** (shown in this example of the invention by broken lines).

An application program **26** is resident in the memory of the computer **24**, and contains code that allows the information contained on the smart card **14** to be processed by the CPU **22**. The application program **26** is able to access information contained in a database **28**, which stores information relating to the ISP **12** as well as a number of other ISPs which are located in different locales. The database **28** may be stored on a CD ROM or on a remote server, for example. The application program **26** may be configured to either dial a default access number previously stored on the smart card **14**, or to read the area code from the smart card **14** and then dial a number from the database closely corresponding thereto. If there is no connection, a prompt asks the user to input the number to be dialed.

The computer **24** is also connected to a user graphical display in the form of monitor **32**, which can display to the user information contained on the smart card **14** and information which is downloaded from the ISP **12**. The computer **24** also contains a modem **34** which establishes a link with ISP **12** via a network in the form of telephone line **30**.

Referring now to FIG. **4**, there is shown a cross-sectional view of the smart card **14**. The smart card comprises a microprocessor **36** which can process information contained on the smart card **14**, a memory component in the form of memory chip **38** which stores the information within the data card, a power source in the form of battery **40** which provides power to the microchip so that it can process information, and a communications interface in the form of contact connector **42**. The contact connector **42** is exposed to the surface of one side of the smart card **14**.

Referring now to FIG. **5**, there is shown the smart card reader **18** with the recess **16** shown by broken lines. On one side of the smart card reader **18** there is provided an electrical connector **44** which is adapted to make contact with the contact connector **42** whenever the smart card **14** is inserted into recess **16**.

Referring to FIG. **6**, there is shown the steps for one typical method of the computer system according to the present invention, which will now be described in detail with reference also to FIGS. **3**, **4**, and **5**. When a user wishes to connect to the ISP **12** in order to access internet services such as the World Wide Web or internet mail service, the user inserts smart card **14** into recess **16** of the smart card reader **18**. The electrical connector **44** detects that the smart card **14** is within the smart card reader **18** when the contact connector **42** makes physical contact with electrical connector **44**. In this example of the invention, an activation code is generated by the microprocessor **36**, which is then sent to the CPU **22** via cable **20**. The CPU then relays this initiation code to the application program **26**. The first stage of this process can be seen as step **46** of FIG. **6**.

Initially, the database is stored with the default telephone number of ISP **12** as a default so that the application program **26** automatically instructs the modem **34** to dial the telephone number of the ISP **12**. The application program **26** then initiates a request code, requesting information relating to the login of the user for the ISP **12** from the smart card **14**. The information from smart card **14** is then transferred from the memory chip **38** to the micro processor **36** out from the card via control connector **42** to electrical connector **44** and on to the CPU **22**.

A routine call code is then generated to establish a link with ISP **12** as a call request as in step **48** of FIG. **6**. The call request then activates modem **34** to place a call to ISP **12**. If the telephone number of ISP **12** is correct, a connection is established with ISP **12** and the login information from smart card **14** can then be transmitted to the ISP **12**.

The ISP **12** verifies that the login name and password are registered with the ISP in order to determine whether the call request is from an authorized user of the ISP **12**. This can be seen at step **50** wherein the ISP **12** connection is made and the user is connected to the ISP **12** at step **52**, or alternatively, if the identification is not verified as a registered user's login and password, the call request is terminated and the program exits (as can be seen at step **54**).

In some circumstances, however, the user may be in another country and may not wish to use the ISP **12** but instead wishes to use another ISP which is not set as the default ISP in database **28**. In such an instance, the local telephone number for ISP **12** would not work, as there is a different country code and area code, or, alternatively, a different ISP telephone number.

In the situation where the user is in another country and wishes to use an ISP in the locale of the particular location in which he or she is in, the default connection to ISP **12** will not be established and the user will be at step **56** of FIG. **6**. That is, the application program **26** will determine that the connection has not been established with ISP **12** and will generate a list of countries from the database to the user on monitor **32**.

The user then selects from the monitor **32** by using a mouse (not shown), the country in which they are in (e.g., the USA), as can be seen at step **58** of FIG. **6**. The application program **26** then receives the selected country from the user and accesses the database **28** to retrieve all of the locales which are in the particular country. The locales are displayed to the user in the monitor **32** (as at step **60** of FIG. **6**). The user then selects the locale in which he or she is in at the particular time (i.e. such as Washington, D.C.).

The ISPs located within that particular locale are then displayed and the user selects a particular ISP from this list (as can be seen at stage **66** of FIG. **6**). Another call request is then initiated as outlined above (this time for the new ISP) as can be seen by the loop **68** of FIG. **6**. It is assumed that in such a situation, each ISP in a particular locale would have the same verification details of the smart card **14**.

In another example of the invention, the smart card may not be used to select a new ISP, but may call the local ISP **12** (e.g., in Sydney, Australia when the user is in Washington, D.C.) by going through steps **46**, **48**, and then **56**. Instead of the user accessing an ISP in the particular locale he or she is currently located in (as described above), the user could select a "direct connect" option which would request the user enter his or her current country location (e.g., USA) and locale (i.e., Washington, D.C.). The application will then determine the international dial-up connection number, the country number, and the area code of the country in which the ISP **12** is located (in this example, Sydney, Australia).

The information contained within the memory chip **38** may contain not only the user's login identification to the

ISP 12, but may contain additional types of data, such as data to carry out a business transaction or data to automatically fill in particular information required on a form.

One example of such information which could automatically be updated on a form is information required by a bank for a personal loan. The smart card 14 could store data relating to the user's income, home address, whether the user's residence is owned or rented, the credit rating of the user and a summary of the spending habits relating to the user. The user would connect to the ISP 12 and connect to a web page of a bank. As the user connects to the bank's ISP 12, the user's information is automatically sent or uploaded to the bank via its ISP 12. The user would not have to fill out any forms via a keyboard, but could input upon interaction with the bank's web page how much he or she wished to loan from the bank. Alternatively, the bank could automatically calculate from the user's information which has been automatically uploaded to the bank the maximum amount of money that it is willing to loan the user. Such information could be displayed to the user from the bank's web page.

A particular advantage of the smart card 14 is that as the user's credit rating or spending habits change, the amount the bank is willing to lend him or her will also change. Therefore, the user could quickly determine how much credit is available to him or her at any particular time, without having to fill out forms (either hardcopy forms or via a web page).

It should be further appreciated that the smart card 14 described herein does not have to be a contact smart card, but may in fact be a contactless smart card wherein the user accesses the ISP 12 whenever the smart card 14 (which in this example would have an antenna embedded within it) is passed near the smart card reader 18.

In yet another example of the invention, the smart card reader and computer 24 may not be separate devices, but may in fact be combined into one piece of hardware so that the user can automatically access the ISP 12. Alternatively, it may be that the CPU 22, modem 34, and application program 26 are located within the smart card itself.

It should also be appreciated that the specific information contained on the data card may also relate to information other than the user's login and password for the ISP 12. The smart card may contain data specifying the network preferences of the user, such as the user's personal web page "book marks" and the specific Uniform Resource Locator (URL) of a particular web site or personalized web page which is accessed whenever the user initially connects to the ISP 12. For example, the issuer of the smart card 14 may be a bank and the ISP 12 could be owned and managed by the bank. The user would be automatically connected to the bank's home page whenever smart card 14 is inserted into smart card reader 18.

In another embodiment of the invention as shown in FIG. 7, the user is provided with online advertisement information that is specifically directed to the user's profile. The user's profile is determined from the personal identification information stored on the smart card 80. The identification information may include the user's name, address, sex, social security number, credit card number, age, and income. Against this individual user information is allocated a profile code sequence that identifies for each information field a profile identifier. For example, corresponding to the user's income will be a code for identifying a range of income that the user falls within. And, corresponding to the user's zip code will be an identifying code for identifying the region the user comes from.

A remote online advertising server 82 for serving up banner advertisements to the user's personal computer 84 will read the profile codes from the smart card 80 using the smart card reader 86 and will then serve to the user's computer advertisements that are targeted according to the user's profile. In this way, the user is provided with advertisement information that is specifically directed to the user's profile.

The above invention has been described with specific embodiments, but a person skilled in the art could introduce many variations on these embodiments without departing from the spirit of the disclosure or from the scope of the appended claims. The embodiments are presented for the purpose of illustration only and should not be read as limiting the invention or its application. Therefore, the claims should be interpreted commensurate with the spirit and scope of the invention.

What is claimed is:

1. A computer system for all wing a user to automatically access one of a plurality of net rk service providers which require information specific to the user and/or the network service provider to be accessed the computer system comprising:

a data card which contains the information specific to the user and/or the network service provider to be accessed;

a data card reader adapted to access at least part of the information contained on the data card when the data card is in communication therewith;

a data processor in communication with the data card reader and adapted to be connected to a network; and

an application program resident on the data processor, said application program being configured to automatically retrieve at least part of the information contained on the data card when the data card is in communication with said data card reader and to use said information to gain access to one of the plurality of network service providers via the network by using one of a default access number indicating a designated network service provider and a local access number from a database containing a list of access numbers or the plurality of network service providers along with corresponding location information for each access number in the list,

wherein said application program is immediately triggered upon insertion of said data card into said data card reader.

2. The computer system as set forth in claim 1, wherein said application program prompts the user to input at least one of a current area code and a current location for use in determining said local access number from said list.

3. The computer system as set forth in claim 1, wherein the user initially inputs said default access number for storage on said data card.

4. The computer system as set forth in claim 1, wherein upon initial use of said data card, the user is prompted to initiate said data card by inputting personal identification information into said data processor for encryption and storage on said data card.

5. The computer system as set forth in claim 1, wherein said data card comprises:

a microprocessor for processing the information contained on the data card;

a memory component for enabling the information to be stored within the data card; and

a communications interface for transferring he information from the data card to the data card reader.

6. The computer system as set forth in claim 5, wherein said communications interface comprises a first antenna embedded inside said data card, and said data card reader comprises a second antenna embedded therein, for communicating the information between said data card and said data card reader.

7. The computer system as set forth in claim 5, wherein said communications interface comprises a contact connector, and said data card reader comprises a plurality of electrical connectors for relaying information to/from said data card when the contact connector and the plurality of electrical connectors are in physical contact.

8. The computer system as set forth in claim 1, wherein said information specific to the user and/or the network service provider includes user identification information, area information, and telephone number information.

9. The computer system as set forth in claim 1, wherein said database is stored on a memory means accessible by the data processor.

10. The computer system as set forth in claim 9, wherein said memory means is a compact disc read only memory.

11. The computer system as set forth in claim 1, wherein said database is stored in a remote server accessible by said data processor.

12. The computer system as set forth in claim 1, further comprising:

a remote server for serving advertisement information to the user based on profile information of the information specific to the user contained on the data card.

13. The computer system as set forth in claim 1, wherein said data processor is housed within said data card reader.

14. A method for allowing a user to automatically access one of a plurality of network service providers which require information specific to the user and/or the network service provider to be accessed, comprising the steps of:

configuring an application program resident on a data processor to automatically retrieve at least part of the information specific to the user and/or the network service provider to be accessed contained on a data card when said data card is in communication with a data card reader and to use said information to gain access to one of the plurality of network service providers via a network by using one of a default access number indicating a designated network service provider and a local access number from a database containing a list of access numbers for the plurality of network service providers along with corresponding location information for each access number in the list; and

immediately triggering said application program upon insertion of said data card into said data card reader.

15. The method as set forth in claim 14, further comprising the step of prompting the user to input at least one of a current area code and a current location for use in determining said local access number from said list.

16. The method as set forth in claim 14, further comprising the step of prompting the user to input said default access number for storage on said data card.

17. The method as set forth in claim 14, further comprising the step of prompting the user, upon initial use of said data card, to initiate said data card by inputting personal identification information into said data processor for encryption and storage on said data card.

18. The method as set forth in claim 14, further comprising the steps of:

processing the information contained on the data card;

storing the information in a memory within the data card; and

transferring the information from the data card to the data card reader.

19. The method as set forth in claim 18, further comprising the steps of:

communicating the information between said data card and said data card reader through a first antenna embedded inside said data card and a second antenna embedded inside said data card reader.

20. The method as set forth in claim 18, further comprising the steps of:

relaying the information to/from said data card when a contact connector of a communications interface of said data card and a plurality of electrical connectors of said data card reader are in physical contact.

21. The method as set forth in claim 14, wherein said information specific to the user and/or the network service provider includes user identification information, location information, and telephone number information.

22. The method as set forth in claim 14, further comprising the step of storing said database on a memory means accessible by the data processor.

23. The method as set forth in claim 22, further comprising the steps of providing said memory means as a compact disc read only memory.

24. The method as set forth in claim 14, further comprising the step of storing said database on a remote server accessible by said data processor.

25. The method as set forth in claim 14, further comprising the step of:

serving advertisement information to the use based on profile information of the information specific to the user contained on the data card.

* * * * *