FILE COPY

FILED

2009 SEP 23 PM 3:04

CLERK U.S. DISTRICT COURT
CENTRAL DIST. OF CALIF.
LOS ANGELES

BY

Ruffin B. Cordell (Admission *Pro Hac Vice* pending)
Ahmed J. Davis (Admission *Pro Hac Vice* pending)
FISH & RICHARDSON P.C.
1425 K Street NW, 11th Floor
Washington, DC 20008
Telephone: 202-783-5070
Facsimile: 202-783-2331

Michael M. Rosen (CA SBN 230964)
rosen@fr.com
FISH & RICHARDSON P.C.
12390 El Camino Real
San Diego, CA 92130-2081
Telephone: 858-678-5070
Facsimile: 858-678-5099

Attorneys for Plaintiff
HEWLETT-PACKARD COMPANY

UNITED STATES DISTRICT COURT

CENTRAL DISTRICT OF CALIFORNIA
(Western Division)

By Fax

HEWLETT PACKARD COMPANY, a Delaware Corporation,

Plaintiff,

v.

ZHUHAI GREE MAGNETO-ELECTRIC CO. LTD., a Chinese Corporation, INKPLUSTONER.COM D/B/A INKPLUS, a California Corporation, MIPO INTERNATIONAL LTD., a Chinese Corporation, MEXTEC GROUP INC. d/b/a MIPO AMERICA LTD., a Florida Corporation, SHANGHAI ANGEL PRINTER SUPPLIES CO. LTD., a Chinese Corporation, SMARTONE SERVICES LLC d/b/a INKFORSALE.NET, a California Corporation, SHENZHEN PRINT MEDIA CO., LTD., a Chinese Corporation, COMPTREE INK D/B/A MERAX, MERITLINE, AND ABCINK.COM, a California Corporation, ZHUHAI NATIONAL RESOURCES & JINGJIE IMAGING PRODUCTS CO., LTD., a Chinese Corporation, TATRIX

Case No. CV09 06929 ODW (Ex)

COMPLAINT FOR PATENT INFRINGEMENT AND PERMANENT INJUNCTION

DEMAND FOR JURY TRIAL

INTERNATIONAL, a Chinese Corporation, OURWAY IMAGE CO., LTD. a Chinese Corporation,

Defendant(s).

COMPLAINT FOR PATENT INFRINGEMENT

Plaintiff Hewlett Packard Company ("HP"), by and through the undersigned attorneys, for their Complaint against Zhuhai Gree Magneto-Electric Co. Ltd. ("Zhuhai Gree"), InkPlusToner.com d/b/a InkPlus ("InkPlus"), Mipo International Ltd. ("Mipo"), Mextec Group Inc. d/b/a Mipo America Ltd., Shanghai Angel Printer Supplies Co. Ltd. ("Shanghai Angel"), SmartOne Services LLC d/b/a InkForSale.net ("SmartOne"), Shenzhen Print Media Co., Ltd. ("Shenzhen Print"), Comptree Ink d/b/a Merax, Meritline, and ABCInk.com ("Comptree"); Zhuhai National Resources & Jingjie Imaging Products Co., Ltd. ("Zhuhai National"), Tatrix International ("Tatrix"), and Ourway Image Co., Ltd. ("Ourway") (collectively "Defendants"), plead and allege:

JURISDICTION AND VENUE

1. This is an action for patent infringement arising under the Patent Laws of the United States, Title 35 of the United States Code (35 U.S.C. §§ 101 *et seq.*).

2. Subject matter jurisdiction before this Court is proper and founded upon 28 U.S.C. §§ 1331 and 1338.

3. This Court holds personal jurisdiction over Defendants because, among other things, on information and belief, Defendants regularly do business in this judicial district and/or reside in California and in this judicial district and/or has infringed or caused infringement in California and in this judicial district.

4. Venue is proper in this judicial district under 28 U.S.C. §§ 1391(b), (c), and 1400(b) because Defendants have committed acts of infringement in this

judicial district and are subject to personal jurisdiction in this judicial district. Defendants Zhuhai Gree, Mipo, Shanghai Angel, Shenzhen Print, Zhuhai National, Tatrix, and Ourway are alien corporations.

THE PARTIES

5. Plaintiff HP is a Delaware corporation having a principal place of business at 3000 Hanover Street, Palo Alto, California 94304.

6. HP is a pioneer in inkjet printing technology, having introduced the world's first consumer inkjet printer in 1984. Since then, HP has sold millions of inkjet supplies in the United States and throughout the world, continually improving the technology.

7. Plaintiff is informed and believes, and on the basis of said information and belief alleges, that Defendant Zhuhai Gree is a corporation organized and existing under the laws of China with its principal place of business located at No. 205, Shihua West Road, Xiangzhou District, Zhuhal, Guangdong 519000 China and doing business in this judicial district.

8. Plaintiff is informed and believes, and on the basis of said information and belief alleges, that Defendant InkPlus is a corporation organized and existing under the laws of the State of California, having a principal place of business at 7851 Alabama Ave. #5, Canoga Park, California 91304 and doing business in this judicial district.

9. Plaintiff is informed and believes, and on the basis of said information and belief alleges, that Defendant Mipo is a private limited company organized and existing under the laws of Hong Kong with its principal place of business located at 7/F Wong Tze Building, 71 Hoe Yuen Road, Kwun Tong, Kowloon, Hong Kong and doing business in this judicial district.

10. Plaintiff is informed and believes, and on the basis of said information and belief alleges, that Defendant Mipo America is a corporation

organized and existing under the laws of the State of Florida with its principal place of business located at 3100 N.W. 72nd Avenue #106, Miami, Florida 33122 and doing business in this judicial district. On information and belief, Mipo America also maintains offices in Los Angeles, California and Charlotte, North Carolina.

11. Plaintiff is informed and believes, and on the basis of said information and belief alleges, that Defendant Shanghai Angel is a corporation organized and existing under the laws of China with its principal place of business located at No. 81 Kanguan Road, Zhujiajiao Industrial Zone, Qingpu District Shanghai Shanghai, China and doing business in this judicial district.

12. Plaintiff is informed and believes, and on the basis of said information and belief alleges, that Defendant SmartOne is a limited liability corporation organized and existing under the laws of the State of California, having a principal place of business at 27613 Del Norte Court, Hayward, California 94545 and doing business in this judicial district.

13. Plaintiff is informed and believes, and on the basis of said information and belief alleges, that Defendant Shenzhen Print is a corporation organized and existing under the laws of China with its principal place of business located at Room 10A Xingfu Ge Zhongfu Building (129), Fumin Rd., Futian District, Shenzhen, China and doing business in this judicial district.

14. Plaintiff is informed and believes, and on the basis of said information and belief alleges, that Defendant Comptree is a corporation organized and existing under the laws of the State of California, having a principal place of business at 18961 East Arenth Ave., City of Industry, California 91748 and doing business in this judicial district.

15. Plaintiff is informed and believes, and on the basis of said information and belief alleges, that Defendant Zhuhai National is a corporation organized and existing under the laws of China with its principal place of business

located at No. 1 Industrial Building, Pingdong 2 Road, Nanping S&T Industry Community, Zhuhai, Guangdong, China and doing business in this judicial district.

16. Plaintiff is informed and believes, and on the basis of said information and belief alleges, that Defendant Tatrix is a corporation organized and existing under the laws of China with its principal place of business located at 10 C, Garden building, No. 1083 JiuZhou Road, Jida, Zhuhai Guangdong, China and doing business in this judicial district.

17. Plaintiff is informed and believes, and on the basis of said information and belief alleges, that Defendant Ourway Image Co., Ltd. ("Ourway") is a corporation organized and existing under the laws of China with its principal place of business located at No. 125 Renmin East Road, Zhu Hai, Guangdong, China and doing business in this judicial district.

18. On information and belief, the accused products include HP 02-compatible ink cartridges that infringe one or more claims of the HP Patents that are made by Zhuhai Gree, Mipo, Shanghai Angel, Shenzhen Print, Zhuhai National, Tatrix, and Ourway. On information and belief, Defendants then sell, import, and/or sell after importation those infringing accused products in the United States.

19. On information and belief, the accused products include at least the following products:

a) Zhuhai Gree's HP 02-compatible MMC and generic branded ink cartridges in black (GH-C8721W), cyan (GH-C8771W), magenta (GH-C8772W), yellow (GH-C8773W), light cyan (GH-C8774W), and light magenta (GH-C8775W);

b) Mipo's HP 02-compatible ink cartridges in black (02 C8721W), cyan (02 C8771W), magenta (02 C8772W), yellow (02 C8773W), light cyan (02 C8774W), and light magenta (02 C8775W);

c) Shanghai Angel Printer HP 02-compatible Handsome ink cartridges in black (CH02 C8721W), cyan (CH02 C8771W), magenta (CH02 C8772W), yellow (CH02 C8773W), light cyan (CH02 C8774W), and light magenta (CH02 C8775W);

d) Shenzhen Print Media HP 02-compatible Merax ink cartridges (PM-HR4 or 6-pack HP 02 Compatible Refillable Inkjet Cartridges Combo) in black (02B), cyan (02C), magenta (02M), yellow (02Y), light cyan (02LC), and light magenta (02LM);

e) Zhuhai National Resources HP 02-compatible standard (H-02, RC-02) and high-capacity (H-02XL, R-02XL) InkTank ink cartridges in black, cyan, magenta, yellow, light cyan, and light magenta;

f) Tatrix HP 02-compatible standard (H-02, RC-02) and high-capacity (H-02XL, R-02XL) PerfectCLR ink cartridges in black, cyan, magenta, yellow, light cyan, and light magenta;

g) Ourway HP 02-compatible DigitalSt@r ink cartridges in black (DS-801B), cyan (DS-801C), magenta (DS-801M), yellow (DS-801Y), light cyan (DS-801LC), and light magenta (DS-801LM).

HP PATENTS-IN-SUIT

20. HP is the owner by valid assignment of all right, title, and interest in and to United States Patent No. 6,959,985 ("the '985 Patent"), entitled "Printing-Fluid Container." The '985 Patent issued from U.S. Patent Application No. 10/633,064, filed July 31, 2002. The '985 Patent is valid, enforceable, and currently is in full force and effect. A true and correct copy of the '985 Patent is attached hereto as **Exhibit A**.

21. HP is the owner by assignment of all right, title, and interest in and to United States Patent No. 7,104,630 ("the '630 Patent"), entitled "Printing-Fluid Container." The '630 Patent issued from U.S. Patent Application No. 10/632,508,

filed July 31, 2003. The '630 Patent is valid, enforceable, and currently is in full force and effect. A true and correct copy of the '630 Patent is attached hereto as **Exhibit B**.

22. HP is the owner by assignment of all right, title, and interest in and to United States Patent No. 6,089,687 ("the '687 Patent"), entitled "Method and Apparatus for Specifying Ink Volume in an Ink Container." The '687 Patent issued from U.S. Patent Application No. 09/037,560, filed March 9, 1998. The '687 Patent is valid, enforceable, and currently is in full force and effect. A true and correct copy of the '687 Patent is attached hereto as **Exhibit C**.

23. HP is the owner by assignment of all right, title, and interest in and to United States Patent No. 6,264,301 ("the '301 Patent"), entitled "Method and Apparatus for Identifying Parameters in a Replaceable Printing Component." The '301 Patent issued from U.S. Patent Application No. 09/076,449, filed May 11, 1998. The '301 Patent is valid, enforceable, and currently is in full force and effect. A true and correct copy of the '301 Patent is attached hereto as **Exhibit D**.

COUNT I

Infringement of the '985 Patent (against all Defendants)

24. HP realleges and incorporates herein by reference the allegations in paragraphs 1-23 above.

25. HP is the current owner of all right, title and interest in and to each of the HP Patents, including the '985 Patent, and has been owner of all right, title and interest in and to the '985 Patent since the date of issuance.

26. The accused products of Defendants Zhuhai Gree, Mipo, Shanghai Angel, Shenzhen Print, Zhuhai National, Tatrix, and Ourway infringe at least one or more claims of the '985 Patent.

27. Defendants have infringed and are infringing the '985 Patent by their unauthorized making, using, selling, offering for sale within the United States, or

importing into the United States, products that infringe one or more of the claims of the '985 Patent.

28. Defendants are not licensed or otherwise authorized to make, use, import, sell, or offer to sell any ink cartridge or process/method claimed in the '985 Patent, and Defendants' conduct is, in every instance, without HP's consent.

29. Defendants are actively inducing or contributing to the infringement by others of the '985 Patent.

30. As a result of the Defendants' past and continued unlawful infringement of the '985 Patent, HP has suffered and will continue to suffer damage. HP is entitled to recover damages adequate to compensate for that infringement in an amount that cannot be presently quantified, but will be ascertained at trial.

31. On information and belief, Defendants' acts of infringement herein have been made with full knowledge of HP's rights in the '985 Patent. Such acts constitute willful and deliberate infringement, entitling HP to enhanced damages and reasonable attorney fees.

32. Defendants' acts of infringement have caused and will continue to cause irreparable injury to HP unless and until enjoined by this Court.

33. HP seeks a preliminary and permanent injunction restraining and enjoining Defendants and their agents, servants, employees, and all persons acting thereunder, in concert with, or on their behalf, from infringing the claims of the '985 Patent.

34. HP seeks an accounting for damages, an award of interest and costs against Defendants, as well as a finding of willful infringement sufficient to warrant an award of attorneys' fees.

COUNT II

Infringement of the '630 Patent (against all Defendants)

35. HP realleges and incorporates herein by reference the allegations in paragraphs 1-34 above.

36. HP is the current owner of all right, title and interest in and to each of the HP Patents, including the '630 Patent, and has been owner of all right, title and interest in and to the '630 Patent since the date of issuance.

37. The accused products of Defendants Zhuhai Gree, Mipo, Shanghai Angel, Shenzhen Print, Zhuhai National, Tatrix, and Ourway infringe at least one or more claims of the '630 Patent.

38. Defendants have infringed and are infringing the '630 Patent by their unauthorized making, using, selling, offering for sale within the United States, or importing into the United States, products that infringe one or more of the claims of the '630 Patent.

39. Defendants are not licensed or otherwise authorized to make, use, import, sell, or offer to sell any ink cartridge or process/method claimed in the '630 Patent, and Defendants' conduct is, in every instance, without HP's consent.

40. Defendants are actively inducing or contributing to the infringement by others of the '630 Patent.

41. As a result of the Defendants' past and continued unlawful infringement of the '630 Patent, HP has suffered and will continue to suffer damage. HP is entitled to recover damages adequate to compensate for that infringement in an amount that cannot be presently quantified, but will be ascertained at trial.

42. On information and belief, Defendants' acts of infringement herein have been made with full knowledge of HP's rights in the '630 Patent. Such acts constitute willful and deliberate infringement, entitling HP to enhanced damages and reasonable attorney fees.

43. Defendants' acts of infringement have caused and will continue to cause irreparable injury to HP unless and until enjoined by this Court.

44. HP seeks a preliminary and permanent injunction restraining and enjoining Defendants and their agents, servants, employees, and all persons acting thereunder, in concert with, or on their behalf, from infringing the claims of the '630 Patent.

45. HP seeks an accounting for damages, an award of interest and costs against Defendants, as well as a finding of willful infringement sufficient to warrant an award of attorneys' fees.

COUNT III

Infringement of the '687 Patent (against all Defendants)

46. HP realleges and incorporates herein by reference the allegations in paragraphs 1-45 above.

47. HP is the current owner of all right, title and interest in and to each of the HP Patents, including the '687 Patent, and has been owner of all right, title and interest in and to the '687 Patent since the date of issuance.

48. The accused products of Defendants Zhuhai Gree, Mipo, Shanghai Angel, Shenzhen Print, Zhuhai National, Tatrix, and Ourway infringe at least one or more claims of the '687 Patent.

49. Defendants have infringed and are infringing the '687 Patent by their unauthorized making, using, selling, offering for sale within the United States, or importing into the United States, products that infringe one or more of the claims of the '687 Patent.

50. Defendants are not licensed or otherwise authorized to make, use, import, sell, or offer to sell any ink cartridge or process/method claimed in the '687 Patent, and Defendants' conduct is, in every instance, without HP's consent.

51. Defendants are actively inducing or contributing to the infringement by others of the '687 Patent.

52. As a result of the Defendants' past and continued unlawful infringement of the '687 Patent, HP has suffered and will continue to suffer damage. HP is entitled to recover damages adequate to compensate for that infringement in an amount that cannot be presently quantified, but will be ascertained at trial.

53. On information and belief, Defendants' acts of infringement herein have been made with full knowledge of HP's rights in the '687 Patent. Such acts constitute willful and deliberate infringement, entitling HP to enhanced damages and reasonable attorney fees.

54. Defendants' acts of infringement have caused and will continue to cause irreparable injury to HP unless and until enjoined by this Court.

55. HP seeks a preliminary and permanent injunction restraining and enjoining Defendants and their agents, servants, employees, and all persons acting thereunder, in concert with, or on their behalf, from infringing the claims of the '687 Patent.

56. HP seeks an accounting for damages, an award of interest and costs against Defendants, as well as a finding of willful infringement sufficient to warrant an award of attorneys' fees.

COUNT IV

Infringement of the '301 Patent (against all Defendants)

57. HP realleges and incorporates herein by reference the allegations in paragraphs 1-56 above.

58. HP is the current owner of all right, title and interest in and to each of the HP Patents, including the '301 Patent, and has been owner of all right, title and interest in and to the '301 Patent since the date of issuance.

59. The accused products of Defendants Zhuhai Gree, Mipo, Shanghai Angel, Shenzhen Print, Zhuhai National, Tatrix, and Ourway infringe at least one or more claims of the '301 Patent.

60. Defendants have infringed and are infringing the '301 Patent by their unauthorized making, using, selling, offering for sale within the United States, or importing into the United States, products that infringe one or more of the claims of the '301 Patent.

61. Defendants are not licensed or otherwise authorized to make, use, import, sell, or offer to sell any ink cartridge or process/method claimed in the '301 Patent, and Defendants' conduct is, in every instance, without HP's consent.

62. Defendants are actively inducing or contributing to the infringement by others of the '301 Patent.

63. As a result of the Defendants' past and continued unlawful infringement of the '301 Patent, HP has suffered and will continue to suffer damage. HP is entitled to recover damages adequate to compensate for that infringement in an amount that cannot be presently quantified, but will be ascertained at trial.

64. On information and belief, Defendants' acts of infringement herein have been made with full knowledge of HP's rights in the '301 Patent. Such acts constitute willful and deliberate infringement, entitling HP to enhanced damages and reasonable attorney fees.

65. Defendants' acts of infringement have caused and will continue to cause irreparable injury to HP unless and until enjoined by this Court.

66. HP seeks a preliminary and permanent injunction restraining and enjoining Defendants and their agents, servants, employees, and all persons acting thereunder, in concert with, or on their behalf, from infringing the claims of the '301 HP Patent.

67. HP seeks an accounting for damages, an award of interest and costs against Defendants, as well as a finding of willful infringement sufficient to warrant an award of attorneys' fees.

JURY DEMAND

Pursuant to Federal Rule of Civil Procedure 38, Plaintiff HP demands a jury trial on all issues triable by jury.

PRAYER FOR RELIEF

Wherefore, Plaintiff HP prays that this Court:

1) Enter judgment declaring that each of the HP Patents was duly and legally issued, is valid, and is enforceable;
2) Enter judgment declaring that Defendants have directly infringed one or more claims of each of the '985, '630, '687 and '301 Patents;
3) Enter judgment declaring that Defendants are actively inducing or contributing to the infringement of one or more claims of each of the HP Patents;
4) Enter judgment that Defendants have willfully infringed one or more claims of each of the HP Patents;
5) Order Defendants to account for and pay to HP the damages resulting from the Defendants' infringement adequate to compensate for that infringement, including pre- and post-judgment interest as allowed by law, costs, and all other damages permitted by 35 U.S.C. § 284;
6) Award HP treble damages as a result of the Defendants' willful infringement;
7) Award HP its costs in this action, declare that this case is an exceptional one under 35 U.S.C. § 285, and award HP its reasonable attorney's fees;
8) Permanently enjoin the Defendants and their officers, agents, servants, employees, affiliates, representatives, successors and assigns, attorneys, and any others acting in concert with them, from infringing the '985, '630, '687 and '301 Patents; and
9) Award HP such further, necessary and proper relief as this Court may deem just and reasonable.

Dated: September 22, 2009

Respectfully Submitted,

By: _____

Ruffin B. Cordell (*Pro Hac Vice* pending)
Ahmed J. Davis (*Pro Hac Vice* pending)
Michael M. Rosen

Attorneys for Plaintiff
Hewlett Packard Company

EXHIBIT A

US006959985B2

(12) **United States Patent**
Steinmetz et al.

(10) **Patent No.: US 6,959,985 B2**
(45) **Date of Patent: Nov. 1, 2005**

(54) **PRINTING-FLUID CONTAINER**

(75) Inventors: **Charlie Steinmetz**, Corvallis, OR (US); **Curt Gonzales**, Corvallis, OR (US); **Daniel W. Petersen**, Philomath, OR (US)

(73) Assignee: **Hewlett-Packard Development Company, L.P.**, Houston, TX (US)

(*) Notice: Subject to any disclaimer, the term of this patent is extended or adjusted under 35 U.S.C. 154(b) by 90 days.

(21) Appl. No.: **10/633,064**

(22) Filed: **Jul. 31, 2003**

(65) **Prior Publication Data**

US 2005/0024453 A1 Feb. 3, 2005

(51) **Int. Cl.**[7] **B41J 2/175**
(52) **U.S. Cl.** **347/86**
(58) **Field of Search** 347/49, 86, 87

(56) **References Cited**

U.S. PATENT DOCUMENTS

4,053,902	A		10/1977	Skafvenstedt
4,419,678	A		12/1983	Kasugayama
4,551,734	A		11/1985	Causley
4,700,202	A		10/1987	Kuranishi
4,967,207	A		10/1990	Ruder
5,146,243	A		9/1992	English
5,523,780	A		6/1996	Hirosawa
5,541,631	A		7/1996	Hashimoto
5,600,358	A		2/1997	Baldwin .
5,734,401	A		3/1998	Clark et al.
5,751,319	A		5/1998	Robertson et al.
5,757,390	A		5/1998	Gragg et al.
5,784,087	A		7/1998	Wallace et al.
5,854,646	A		12/1998	Barinaga et al.
5,956,054	A		9/1999	Hirabayashi
6,048,055	A		4/2000	Hakkaku
6,086,193	A		7/2000	Shimada
6,102,535	A		8/2000	Papenfuhs
6,130,695	A		10/2000	Childers
6,170,937	B1	*	1/2001	Childers et al. 347/85
6,231,173	B1		5/2001	Pawlowski, Jr.
6,243,115	B1		6/2001	Baker et al.
6,264,314	B1		7/2001	Mochizuki
6,273,562	B1		8/2001	Deshmukh
6,276,788	B1		8/2001	Hilton
6,283,586	B1		9/2001	Childers
6,286,921	B1		9/2001	Ochi
6,286,944	B1		9/2001	Shimizu
6,286,945	B1		9/2001	Higuma
6,293,662	B1		9/2001	Shihoh
6,322,205	B1		11/2001	Childers et al.
6,322,207	B1		11/2001	Hall et al.
6,350,024	B2		2/2002	Haines
6,443,567	B1		9/2002	Hayashi
6,494,568	B2		12/2002	Hou
6,582,068	B2		6/2003	Ishizawa
6,585,362	B2		7/2003	Blease
6,648,460	B2		11/2003	Gonzales
6,666,542	B2		12/2003	Yoshiyama
2001/0017641	A1		8/2001	Kobayashi et al.
2001/0019347	A1		9/2001	Hauck
2001/0020970	A1		9/2001	Kuribayashi et al.
2002/0036680	A1		3/2002	Hall et al.
2002/0080216	A1		6/2002	Dowell et al.
2002/0101487	A1		8/2002	Petersen et al.
2002/0118260	A1		8/2002	Waggoner et al.
2002/0158943	A1		10/2002	Powell

FOREIGN PATENT DOCUMENTS

DE	32 47 875	8/1983
EP	0562717	9/1993
EP	0 607 928	7/1994
EP	0 610 965	8/1994
EP	0 597 628	4/1996
EP	0803364	10/1997
EP	0803365	10/1997
EP	1 284 193	2/2003
JP	03016738	1/1991
JP	04187448	6/1992
WO	WO 94/07699	4/1994

* cited by examiner

Primary Examiner—Anh T. N. Vo

(57) **ABSTRACT**

A printing-fluid container includes a leading portion having a substantially planar profile, and a trailing portion adapted to cooperate with the leading portion to define a bounded volume having an ink capacity. The leading portion is configured to mate with a complementarily configured ink-container bay.

43 Claims, 9 Drawing Sheets

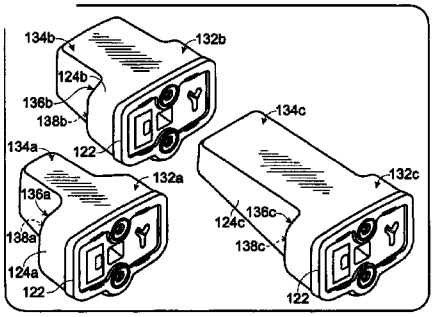

FIG. 1

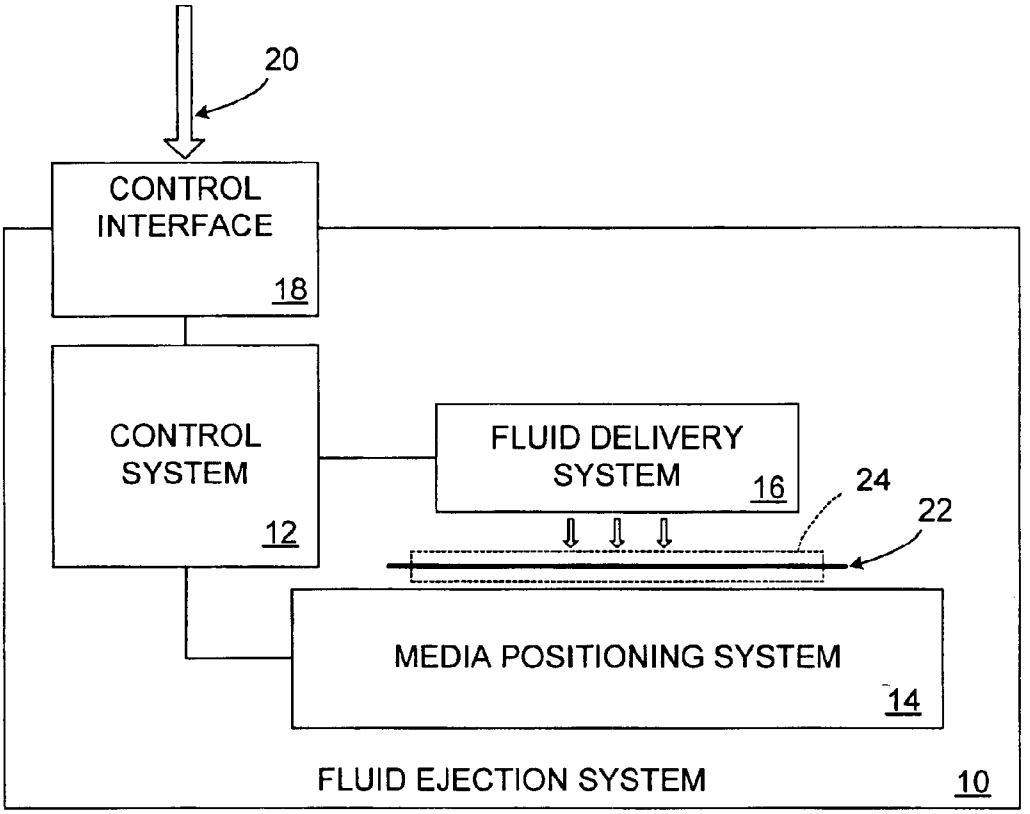
20
CONTROL INTERFACE
18
CONTROL SYSTEM
12
FLUID DELIVERY SYSTEM
16
24
22
MEDIA POSITIONING SYSTEM
14
FLUID EJECTION SYSTEM
10

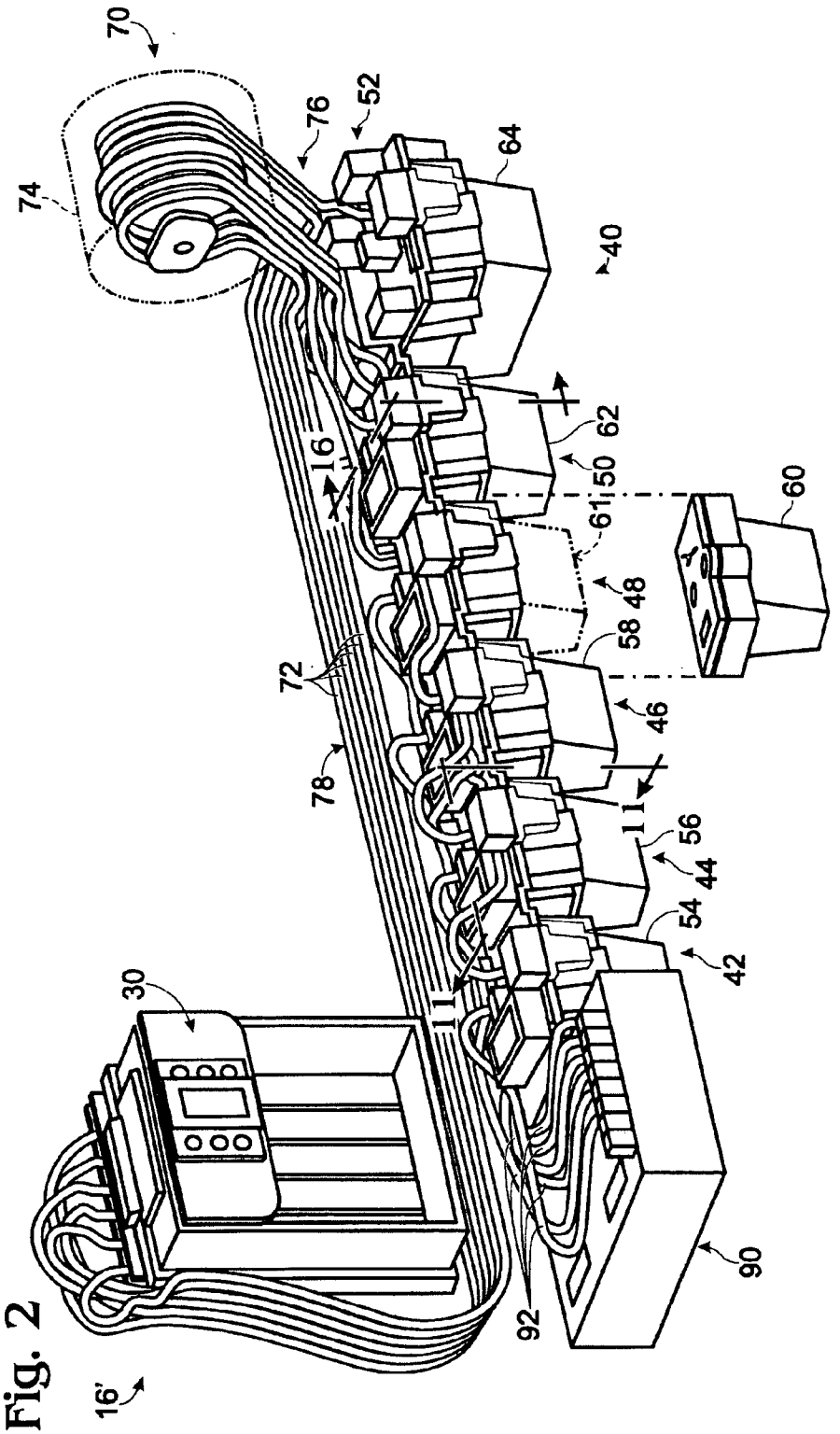
70
76
52
64
74
40
62
50
16
61
60
48
58
72
46
78
11
56
44
54
42
30
11
9
90
92
16'

Fig. 2

Fig. 3

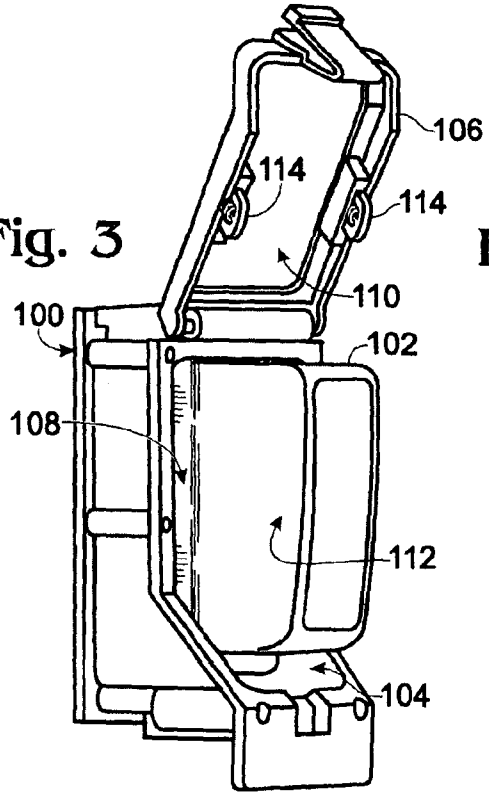

Fig. 4

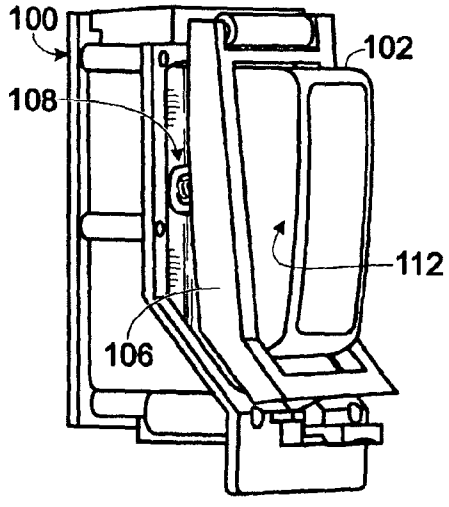

Fig. 5

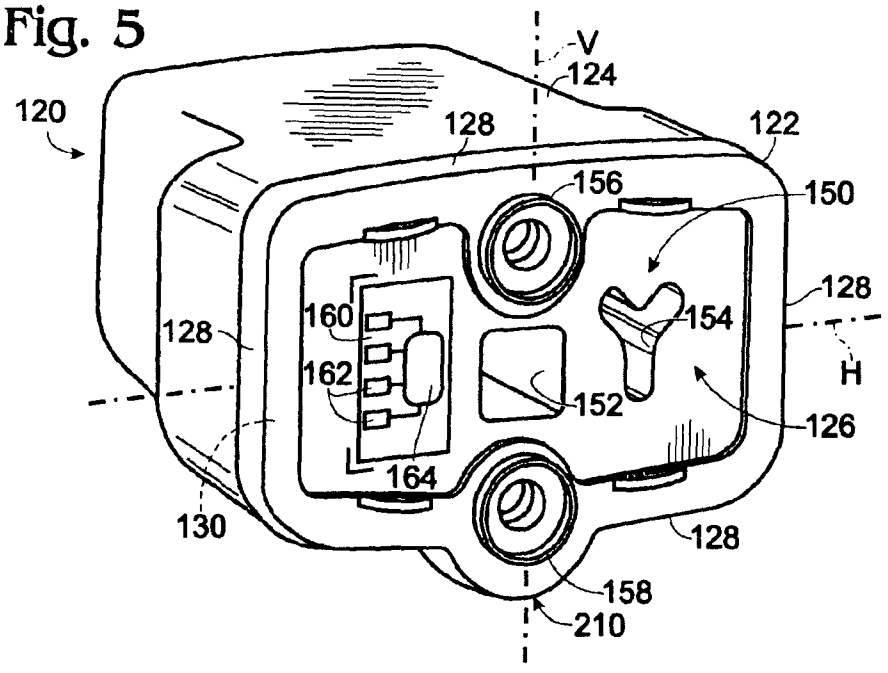

Fig. 6

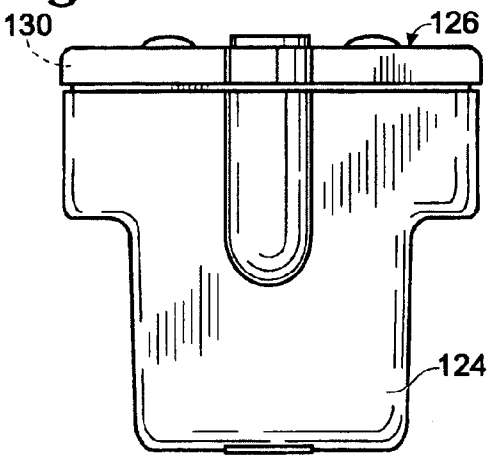

Fig. 7

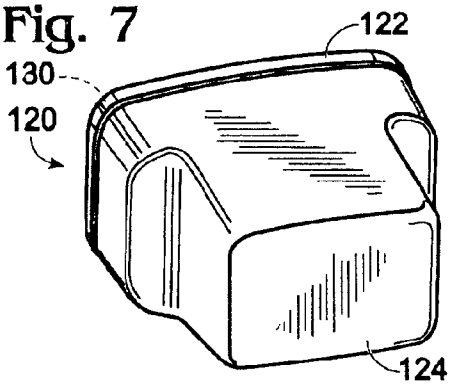

Fig. 8

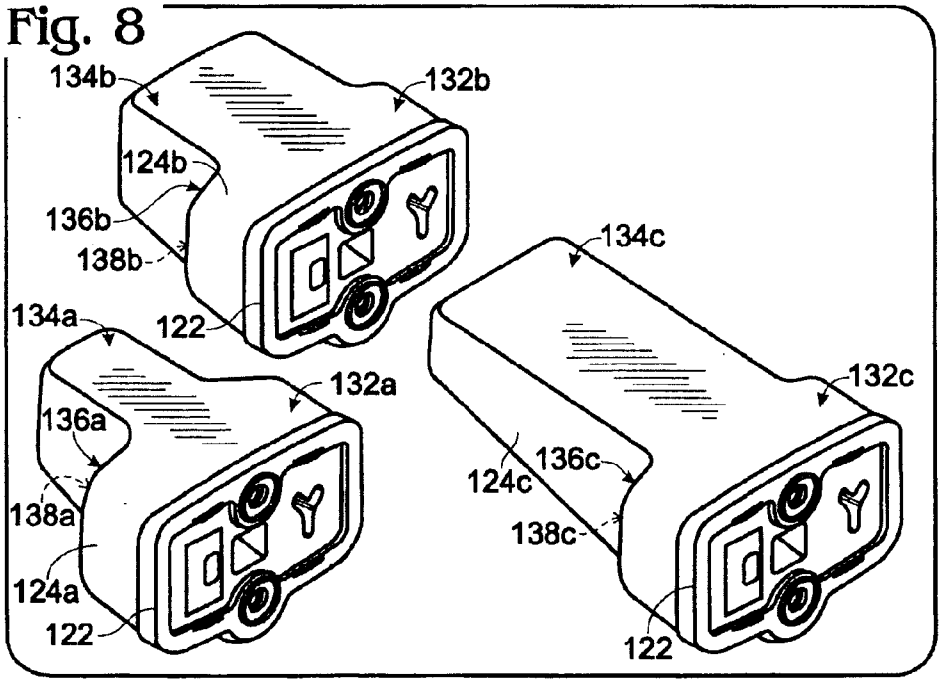

Fig. 9

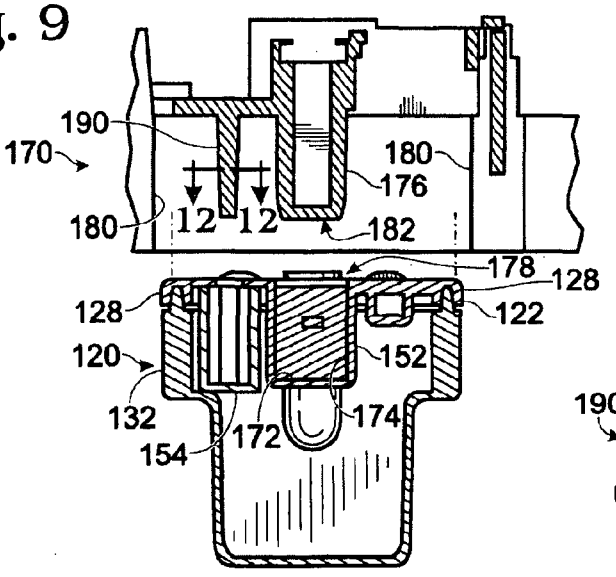

Fig. 12

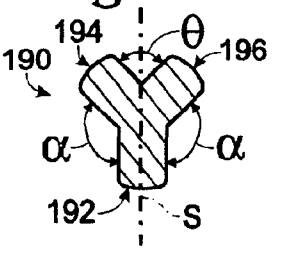

Fig. 10

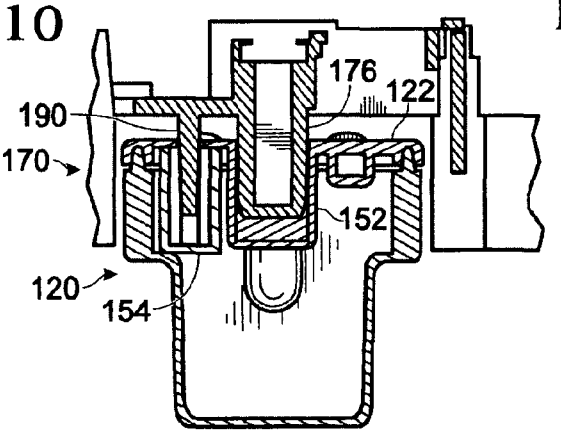

Fig. 13

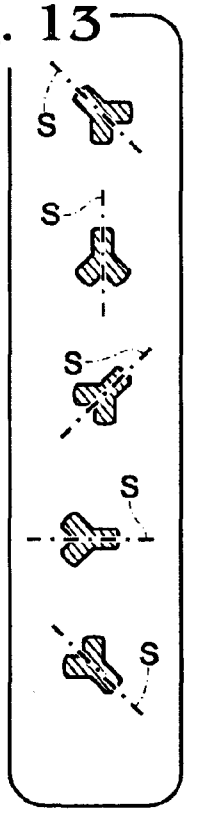

Fig. 11

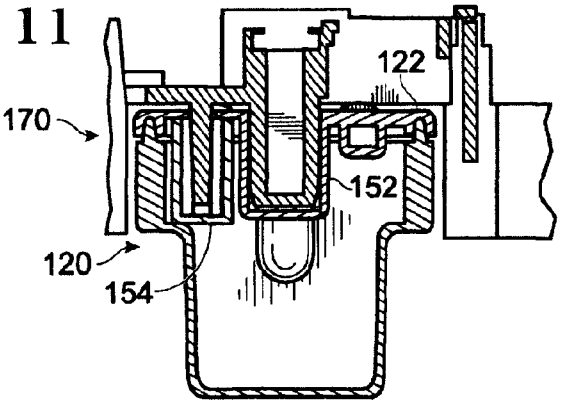

Fig. 14

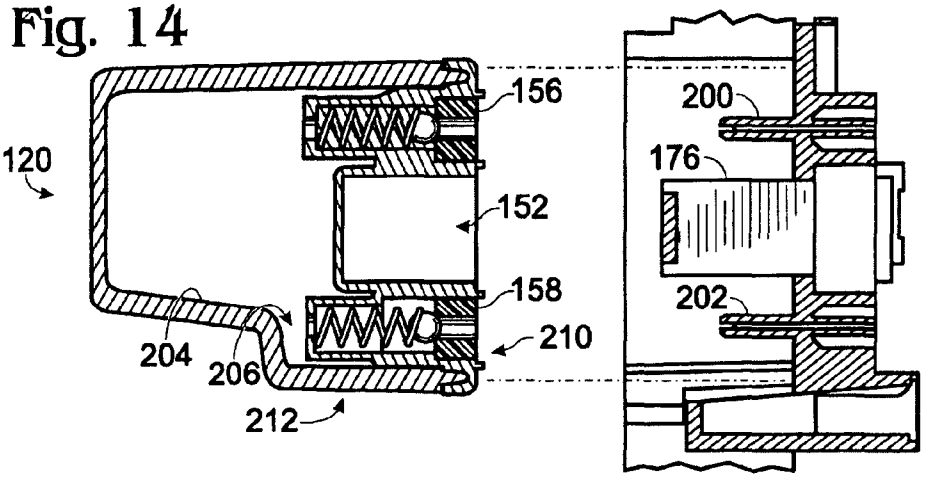

Fig. 15

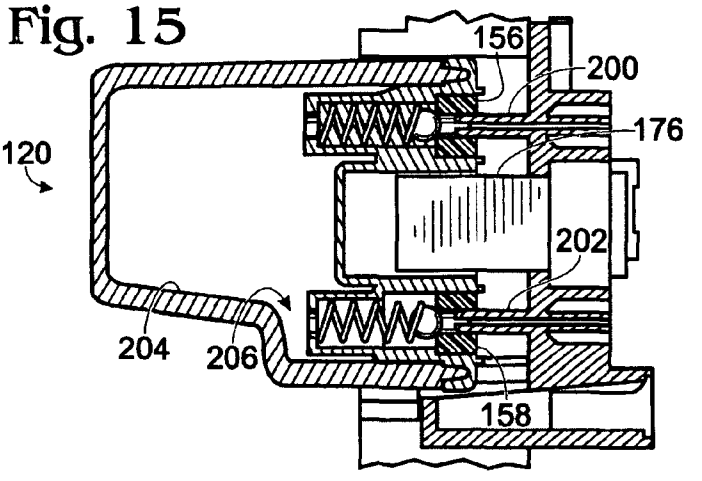

Fig. 16

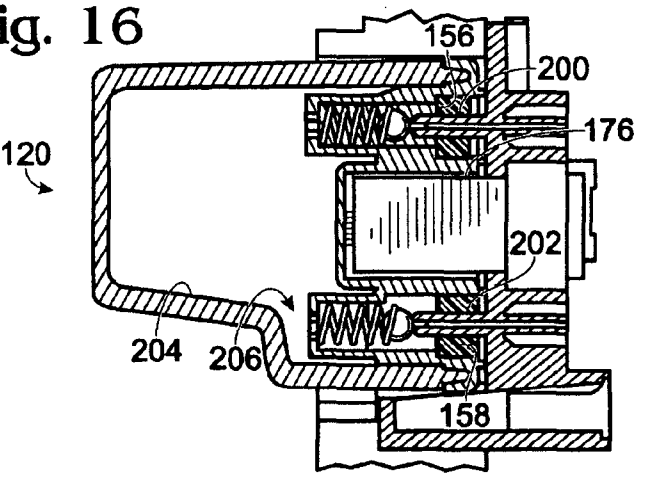

Fig. 17

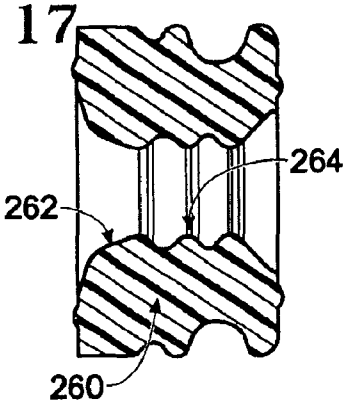

Fig. 18

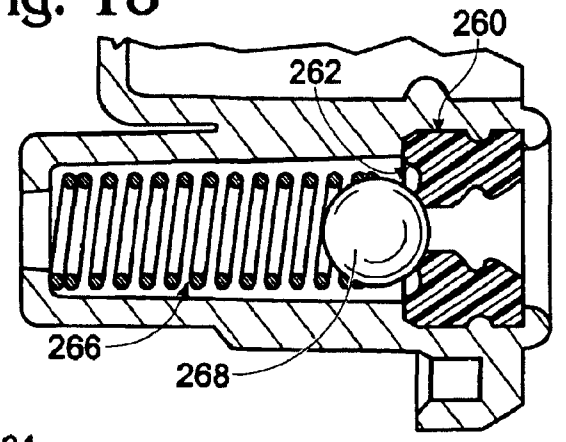

Fig. 19

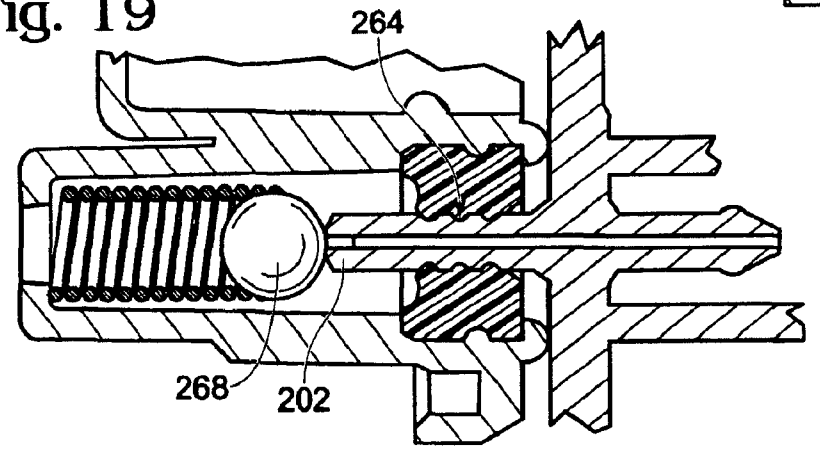

Fig. 20

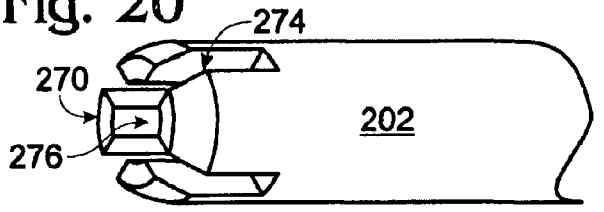

Fig. 21

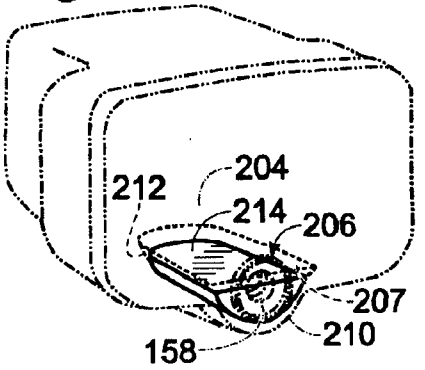

Fig. 22

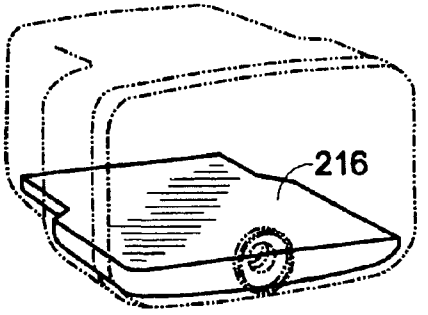

Fig. 24

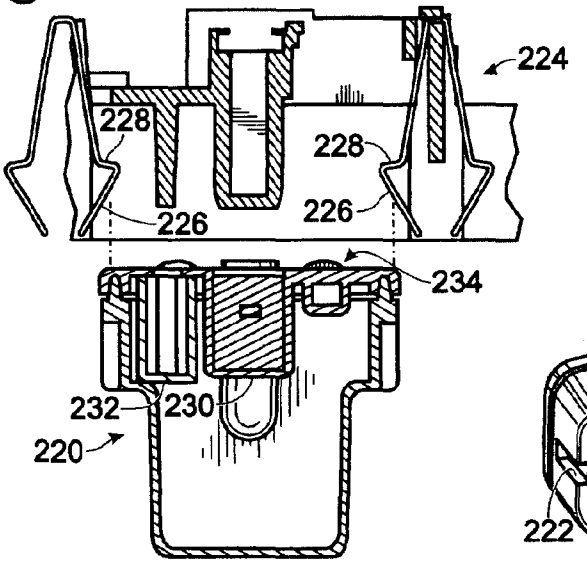

Fig. 23

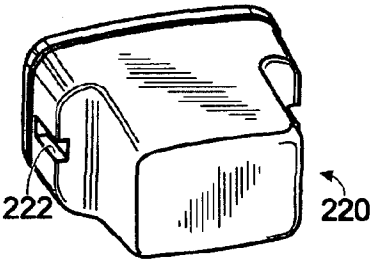

Fig. 25

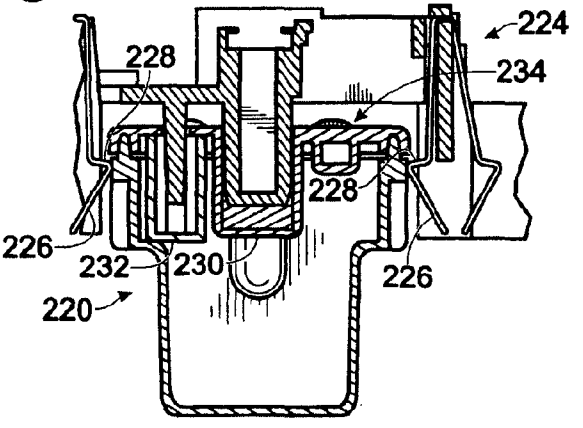

Fig. 26

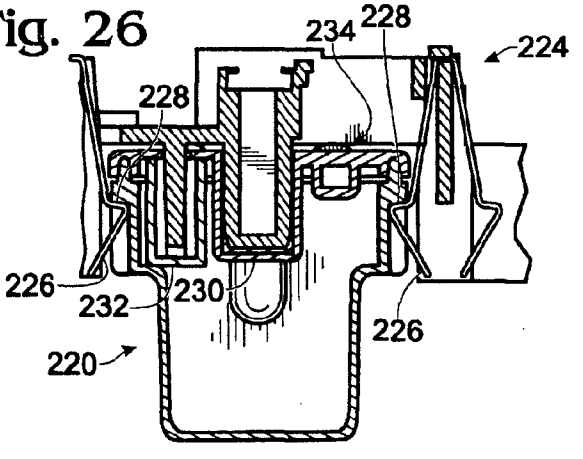

Fig. 27

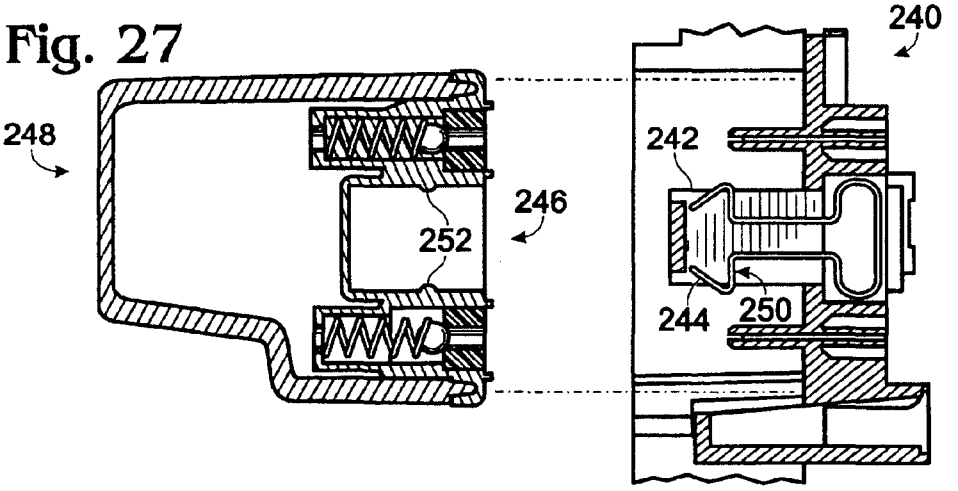

Fig. 28

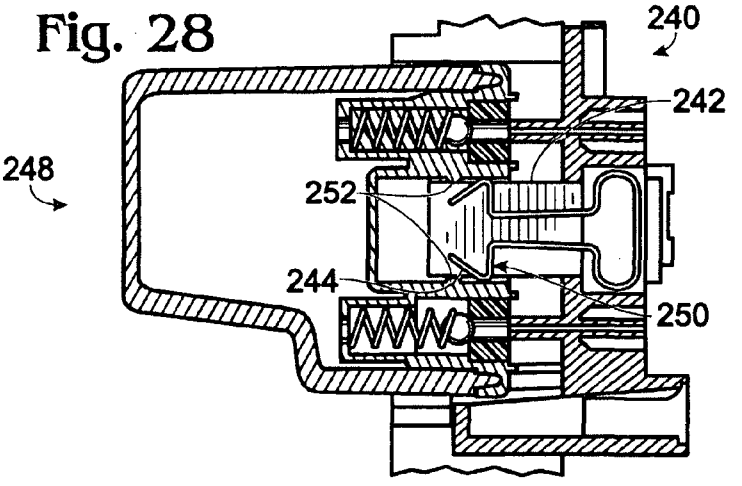

Fig. 29

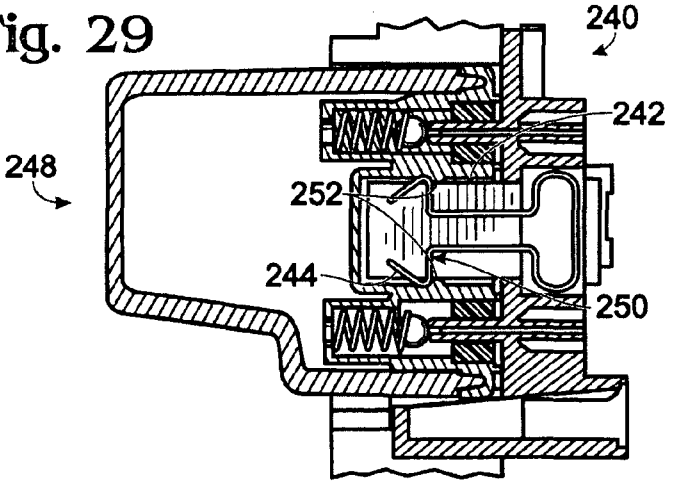

PRINTING-FLUID CONTAINER

BACKGROUND

Inkjet printing systems often utilize one or more replaceable ink containers that hold a finite volume of ink. An ink container can be replaced if the ink container is unable to deliver ink. For example, an ink container can be replaced if all of the ink in the ink container is used and the ink container is empty. Many known ink containers are unable to deliver all of the ink in the ink container and are considered to be effectively empty although some ink remains in the ink container. Such ink containers can be replaced when the ink container ceases to adequately deliver ink. Users generally prefer ink containers that do not have to be frequently replaced. Furthermore, users generally prefer ink containers that are relatively easy to replace when replacement is necessary.

BRIEF DESCRIPTION OF THE DRAWINGS

FIG. **1** is a schematic view of a fluid ejection system according to an embodiment of the present invention.

FIG. **2** is a somewhat schematic view of an embodiment of a printing-fluid delivery system as used in the fluid ejection system of FIG. **1**.

FIG. **3** shows an embodiment of a printing-fluid container bay in an open position as used in the fluid delivery system of FIG. **2**.

FIG. **4** shows the printing-fluid container bay of FIG. **3** in a closed position.

FIG. **5** shows a front isometric view of a printing-fluid container according to an embodiment of the present invention.

FIG. **6** shows a bottom view of the printing-fluid container of FIG. **5**.

FIG. **7** shows a back isometric view of the printing-fluid container of FIG. **5**.

FIG. **8** shows a set of three printing-fluid containers formed by combining three different reservoir bodies with three similarly configured lids.

FIGS. **9–11** show top cross-section views of a printing-fluid container being seated into a printing-fluid container bay according to an embodiment of the present invention.

FIG. **12** shows a cross-section view of a key post configured to mate with a corresponding keying pocket of a printing-fluid container according to an embodiment of the present invention.

FIG. **13** shows five key posts configured to respectively key five different printing fluids.

FIGS. **14–16** show side cross-section views of a printing-fluid container being seated into a printing-fluid container bay according to an embodiment of the present invention.

FIG. **17** shows a cross-section view of a sealing member of the printing-fluid container of FIGS. **14–16**.

FIG. **18** is a somewhat schematic view of a ball seal mechanism of the printing-fluid container of FIGS. **14–16**.

FIG. **19** shows the ball seal mechanism of FIG. **18** engaged by a fluid connector.

FIG. **20** shows the fluid connector of FIG. **19**.

FIG. **21** schematically shows a printing-fluid level of a printing-fluid container that includes a well.

FIG. **22** schematically shows a printing-fluid level of a printing-fluid container that does not include a well.

FIG. **23** shows a back isometric view of a printing-fluid container according to an embodiment of the present invention.

FIGS. **24–26** show top cross-section views of a printing-fluid container being seated into a printing-fluid container bay according to an embodiment of the present invention.

FIGS. **27–29** show side cross-section views of a printing-fluid container being seated into a printing-fluid container bay according to an embodiment of the present invention.

DETAILED DESCRIPTION

FIG. **1** schematically shows a fluid ejection system **10**. Although fluid ejection systems may be configured to eject a variety of different fluids onto a corresponding variety of different media in various embodiments, this disclosure focuses on an exemplary printing system that is used to eject, or print, ink onto paper. However, it should be understood that other printing systems, as well as fluid ejection systems designed for nonprinting applications, are also within the scope of this disclosure.

Fluid ejection system **10** includes a control system **12**, a media positioning system **14**, a fluid delivery system **16**, and a control interface **18**. Control system **12** may include componentry, such as a printed circuit board, processor, memory, application specific integrated circuit, etc., which effectuates fluid ejection corresponding to a received fluid ejection signal **20**. Fluid ejection signals may be received via a wired or wireless control interface **18**, or other suitable mechanism. The fluid ejection signals may include instructions to perform a desired fluid ejection process. Upon receiving such a fluid ejection signal, the control system may cause media positioning system **14** and fluid delivery system **16** to cooperate to eject fluid onto a medium **22**. As one example, a fluid ejection signal may include a print job defining a particular image to be printed. The control system may interpret the print job and cause fluid, such as ink, to be ejected onto paper in a pattern replicating the image defined by the print job.

Media positioning system **14** may control the relative positioning of the fluid ejection system and a medium onto which the fluid ejection system is to eject fluid. For example, media positioning system **14** may include a paper feed that advances paper through a printing zone **24** of the fluid ejection system. The media positioning system may additionally or alternatively include a mechanism for laterally positioning a printhead, or other suitable device, for ejecting fluid to different areas of the printing zone. The relative position of the medium and the fluid ejection system may be controlled, so that fluid may be ejected onto only a desired portion of the medium. In some embodiments, media positioning system **14** may be selectively configurable to accommodate two or more different types and/or sizes of media.

FIG. **2** schematically shows an exemplary fluid delivery system in the form of a printing-fluid delivery system **16'**. The printing-fluid delivery system includes a scanning printhead **30**, which may include one or more nozzles adapted to receive a printing-fluid from a fluid supply and eject the printing-fluid onto a print medium. A nozzle may be associated with a fluid ejector, such as a semiconductor resistor, that is operatively connected to a control system. The control system may selectively cause the fluid ejector to heat printing-fluid that is delivered to the fluid ejector. In embodiments that utilize a resistor as a fluid ejector, the resistor may be activated by directing current through the resistor in one or more pulses. Heated printing-fluid may at least partially vaporize and create a printing-fluid bubble. Expansion of the

printing-fluid bubble may cause some of the printing-fluid to be ejected out of the corresponding nozzle onto the print medium. A printhead may be adapted to print a single color of ink, two or more different colors of ink, as well as a preconditioner, fixer, and/or other printing fluid. It is within the scope of this disclosure to utilize other mechanisms for ejecting fluid onto a medium, and printhead **30** is provided as a nonlimiting example. For example, a printhead may include a fluid ejector configured to effectuate fluid ejection via a nonthermal mechanism, such as vibration.

Printing-fluid delivery system **16**'includes an off-axis ink-supply station **40**. An "off-axis" ink-supply may be located apart from a printhead so that the printhead can scan across a printing zone while the ink-supply remains substantially stationary. Such an arrangement may decrease the total weight of a printhead assembly compared to a printhead assembly that includes an on-axis ink-supply. A relatively light printhead assembly may require relatively less energy to move, while moving faster, quieter, and/or with less vibration than a printhead with an integrated on-axis ink-supply. An off-axis ink-supply may be positioned for easy access to facilitate replenishing the ink-supply and may be sized to accommodate a desired volume of ink. As explained in more detail below, an ink-supply station may be configured for front loading so that a printing-fluid container can be laterally inserted into a printing system. The stationary position and relatively easy access of an off-axis ink-supply can allow for relatively large volumes of ink to be stored and delivered.

An off-axis ink-supply may include containers for storing and delivery one or more colors of ink as well as other printing-fluids. For example, ink-supply station **40** includes six ink-container bays configured to accommodate six corresponding ink containers. In the illustrated embodiment, ink-supply station **40** includes yellow bay **42**, dark-magenta bay **44**, light-magenta bay **46**, dark-cyan bay **48**, light-cyan bay **50**, and black bay **52**, which respectively are adapted to receive yellow ink container **54**, dark-magenta ink container **56**, light-magenta ink container **58**, dark-cyan ink container **60**, light-cyan ink container **62**, and black ink container **64**. Other printing systems may be designed for use with more or fewer colors, including colors different than those described above. It should be understood that as used herein, "ink" may be used in a general sense to refer to other printing fluids, such as preconditioners, fixers, etc., which may also held by an ink-container and delivered via a fluid delivery system. Two or more ink containers holding a printing fluid of the same color and/or type may be used in the same printing system. In some embodiments, one or more of the ink-container bays may be sized differently than another ink-container bay. For example, in the illustrated embodiment, black bay **52** is larger than the other ink-container bays, and therefore can accommodate a relatively larger ink container. As is described in more detail below, a particular ink-container bay may accommodate ink containers of differing sizes.

Ink delivery system **16**'includes an ink transport system **70** configured to move ink from the ink-supply station to the printhead. In some embodiments, the ink transport system may be a bidirectional transport system capable of moving ink from the ink-supply station to the printhead and vice versa. An ink transport system may include one or more transport paths for each color of ink. In the illustrated embodiment, ink transport system **70** includes a tube **72** that links an ink container of the ink-supply station to the printhead. In the illustrated embodiment, there are six such tubes that fluidically couple the ink containers to the printhead. A tube may be constructed with sufficient length and flexibility to allow the printhead to scan across a printing zone. Furthermore, the tube may be at least partially chemically inert relative to the ink that the tube transports.

The ink transport system may include one or more mechanisms configured to effectuate the transport of ink through an ink transport path. Such a mechanism may work to establish a pressure differential that encourages the movement of ink. In the illustrated embodiment, fluid transport system **70** includes a pump **74** configured to effectuate the transport of ink through each tube **72**. Such a pump may be configured as a bi-directional pump that is configured to move ink in different directions through a corresponding ink transport path.

An ink transport path may include two or more portions. For example, each tube **72** includes a static portion **76** linking an ink container to the pump and a dynamic portion **78** linking the pump to the printhead. The transport path may also include a pumping portion that effectively links the static portion to the dynamic portion and interacts with the pump to effectuate ink transport. The individual portions of an ink transport path may be physically distinct segments that are fluidically linked by one or more interconnects. In some embodiments, a single length of tube linking an ink container to the printhead may be functionally divided into two or more portions, including static and dynamic portions. In the illustrated embodiment, dynamic portion **78** is adapted to link a stationary ink-supply station to a scanning printhead that moves during printing, and therefore the dynamic portion is configured to move and flex with the printhead. The static portion, which links a stationary ink-supply station to a stationary pump, may remain substantially fixed.

An ink container of ink-supply station **40** may include a vent configured to facilitate the input and output of ink from the container. For example, a vent may fluidically couple the inside of an ink container to the atmosphere to help reduce unfavorable pressure gradients that may hinder ink transport. Such a vent may be configured to limit ink from exiting the ink container through the vent, thus preventing unnecessary ink dissipation. An exemplary vent in the form of a fluidic interface is described in more detail below.

Printing-fluid delivery system **16**'may include a vent chamber **90** configured to reduce ink evaporation and/or other ink loss. Each ink container of ink-supply station **40** may be fluidically coupled to vent chamber **90** via a tube **92** linking the vent of that ink container to the vent chamber. In other words, an ink-container vent may be connected to the vent chamber to facilitate ink transport between an ink container and the printhead. The vent chamber may decrease unfavorable pressure gradients while limiting evaporation of ink to the atmosphere. In some embodiments, vent chamber **90** may include a labyrinth that limits ink loss. Vent chamber **90** may be fixed in a substantially stationary position.

As mentioned above, FIG. **2** somewhat schematically depicts printing-fluid delivery system **16**'. The precise arrangement of the constituent elements of the printing-fluid delivery system may be physically arranged according to a desired industrial design. Similarly, the individual elements may vary from the illustrated embodiments while remaining within the scope of this disclosure. Size, shape, access, and aesthetics are among factors that may be considered when designing a fluid ejection system that utilizes a printing-fluid delivery system according to the present disclosure. Though described and illustrated with reference to an off-axis ink supply, it should be understood that many of the principles

herein described are applicable to on-axis ink supplies. The off-axis ink supply is provided as a nonlimiting example, and on-axis ink supplies are also within the scope of this disclosure.

FIG. **2** shows uninstalled dark-cyan ink container **60** in solid lines. As indicated in dashed lines at **61**, the dark-cyan ink container may be installed into ink-supply station **40**. Similarly, the other ink containers of ink-supply station **40** may be selectively installed and uninstalled. In this manner, an exhausted ink-supply may be replenished by installing a full ink container, thus extending the operational life of a fluid ejection system. The ink-supply station may be configured so that the individual ink containers may be exchanged independently of one another. For example, if only one ink container becomes exhausted, that ink container can be replaced while leaving the other ink containers in place. It should be understood that while FIG. **2** shows ink container **60** being installed into ink-supply station **40** in a generally vertical direction, this is not necessarily required. Ink-supply station **40** may be orientated to receive ink-containers that are laterally installed. Furthermore, a ganged ink supply, which accommodates two or more different printing fluids and/or colors in a common container assembly, may be seated in an ink container bay.

An ink delivery system may include an ink-level monitor configured to track the amount of ink available for delivery. An ink-level monitor may be configured to individually monitor individual ink containers, groups of ink containers supplying the same color of ink, and/or the collective ink-supply of the system. The ink-level monitor may cooperate with a notification system to inform a user of the status of the ink level, thus enabling a user to assess ink levels and prepare for ink replenishment. Furthermore, as described in more detail below, an ink container may include a memory and an associated electrical interface, and information regarding the ink-level of an ink container may be stored on such a memory and conveyed via the electrical interface.

FIGS. **3** and **4** show a more detailed view of an exemplary ink-container bay **100** configured to selectively receive an ink container **102**. FIG. **3** shows ink-container bay **100** in an open position and FIG. **4** shows the ink-container bay in a closed position, in which the ink-container bay is retaining ink container **102**. The ink-container bay may include a seat **104** adapted to pair with a portion of an ink container. In other words, seat **104** and a portion of the ink container may be complementarily configured so that the ink container can be docked in the seat. The seat may be sized and shaped to mate with the size and shape of a portion of an ink container, such as an ink-container lid and/or a shoulder portion of an ink-container reservoir body. The ink-container bay may include a latching member **106** adapted to hold the ink container in place. In the illustrated embodiment, latching member **106** pivots on a hinge to engage a rim portion **108** of ink container **102**. Rim portion **108** is an example of a latching surface, which may be engaged by a latching member to retain an ink container in an ink-container bay. In the illustrated embodiment, latching member **106** includes an open void **110** through which a rear-portion **112** of ink container **102** may extend. A latching member, or a combination of two or more latching members, configured to hold an ink container in place may be configured to accommodate ink containers having different sizes. In some embodiments, a latching member may engage one or more portions of an ink container, such as a latching surface of rim portion **108**. In the illustrated embodiment, latching member **106** includes a plunger **114** configured to engage rim portion **108** on each side of the ink container, while rear portion **112** extends through open void **110**. Plunger **114** includes a resilient member adapted to apply seating pressure to ink container **102** when latching member **106** is in a closed position. In some embodiments, two or more latching members may be separately movable components that facilitate large rear portions, or a unitary latching member can be configured to accommodate large rear portions. Furthermore, in some embodiments, alternative or additional latching mechanisms may be used to hold an ink container in place.

FIGS. **5–7** show an ink container **120** that includes an ink-container lid **122** and an ink-container reservoir body **124** that are complementarily configured to collectively define a bounded volume in which ink may be contained. The ink-container lid and the reservoir body may be collectively referred to as a reservoir, ink reservoir, or printing-fluid reservoir. In some embodiments, such a reservoir may be formed from a mingle structural piece, or two or more pieces that are connected differently than shown in the illustrated embodiment. Lid **122** may include an inner-side that faces towards the inside of the ink container when the reservoir body is coupled to the lid. The lid may include one or more portions adapted to engage a reservoir body or otherwise secure the lid to the reservoir body. In some ombodiments, a lid and a reservoir body may be releasably secured to one another while some embodiments may utilize a lid and a reservoir body that are connected in a substantially permanent arrangement. A gasket or other suitable seal may be fit at an interface between lid **122** and reservoir body **124** to enhance the ability of the lid and the reservoir body to hold a volume of ink or other printing fluid.

Ink container **120** may be configured as a free ink container adapted to hold a free volume of ink. As used herein, a free volume of ink refers to a volume of ink that is held within a container without the use of a sponge, foam, ink sack, or similar intermediate holding apparatus and/or back-pressure applying device. A free ink container can be substantially "open" within its boundaries, thus permitting a relatively large percentage of the enclosed volume to be filled with ink, which can flow freely within the reservoir. As described in more detail herein, the design of ink container **120** allows a free volume of ink to be extracted from the ink container and delivered to a printhead. Furthermore, as described below, a very high percentage of a free volume of ink can be extracted from a free ink container, thus limiting the amount of stranded ink.

Ink-container lid **122** includes an outer-face **126** that faces away from the contents of an ink container. Outer-face **126** can be designed to be the "forward" facing portion of an ink container when the ink container is installed in a corresponding ink-container bay. Accordingly, the outer-face may be referred to as a leading surface of the ink container or as being aligned with a leading plane of the ink container. In some embodiments, a portion of a printing-fluid container other than a lid similar to ink-container lid **122** may be the leading surface of the printing-fluid container.

Ink-container lid **122** can be formed with an outer-face **126** that has a substantially planar profile. As described in more detail below, the outer-face may include one or more recesses adapted to provide mechanical alignment and/or keying. The outer-face may additionally or alternatively include holes that pass from the outside of an ink container to the inside of an ink container. Such holes may be used as fluidic interfaces for moving a printing fluid and/or air from inside the ink container to outside the ink container, and vice versa. An entry point of each recess, hole, and/or other interface may be arranged on the same leading surface. In

some embodiments, the entry points to various interfaces of a printing-fluid container may be located on towers that are raised above another portion of the leading surface. Such an embodiment may not have a substantially planar profile, yet the entry point of various mechanical, fluidic, and/or electrical interfaces may be aligned on a common leading plane. In some embodiments, the entry point to each interface may be arranged within an acceptable distance on either side of a leading plane. For example, in some embodiments, any forward or backward variation of an interface's entry point relative to the entry, point of another interface may be less than approximately 5 mm, while in most embodiments such variations may be less than approximately 2 mm, or even 1 mm. An ink-container lid that has an outer-face with a substantially planar profile may be referred to as a substantially planar ink-container lid, although such an ink-container lid can have a measurable thickness, an irregular inner-side, and/or one or more surface deviations on its outer-face.

Ink-container lid **122** can be constructed as a unitary structural piece **130**, as opposed to a combination of two or more structural pieces. Such a piece may be molded, extruded, or otherwise formed from a material selected for strength, weight, workability, cost, compatibility with ink, and/or other considerations. For example, the lid may be injection molded from a suitable synthetic material. Construction from a unitary structural piece produces an ink-container lid in which an inner-side and an outer-face are opposite sides of the same piece of material.

An ink-container lid constructed from a unitary structural piece may be fit with complementary auxiliary components. For example, a gasket may be used to promote a fluid-tight seal between the ink-container lid and a reservoir body. A fluidic interface formed in a unitary structural piece may be fit with a seal configured to selectively seal ink within the ink container. The seal may take the form of a septum, a ball and septum assembly, or other mechanism. A memory device may be affixed to ink-container lid **122** and the ink-container lid may be equipped with an electrical interface for transferring data to and from the memory device. Such auxiliary components can be adapted to integrally cooperate with the unitary structural piece that defines the general size and shape of the ink-container lid.

Ink container **120** includes a reservoir body **124** that cooperates with ink-container lid **122** to provide a structural boundary for containing a volume of ink. As described in more detail below, the various mechanical, electrical, and fluidic interfaces of ink container **122** may be arranged on an ink-container lid. In other words, interface functionality of an ink container can be substantially consolidated to an ink-container lid, thus providing design freedom with respect to the reservoir body. For example, FIG. **8** shows ink-container lid **122** with three differently sized reservoir bodies **124***a*–**124***c*. As can be seen, ink containers with different ink capacities can be formed by combining different reservoir bodies with the same ink-container lid. Therefore, an ink container may be selectively sized to provide a desired ink capacity. Furthermore, two or more ink containers having different ink capacities may be alternately installed into the same ink-container bay, thereby providing increased printer configuration flexibility. Standardizing ink-container lid design may also help to reduce manufacturing costs. It should be understood that differently configured ink-container lids are also within the scope of this disclosure.

A portion of an ink-container reservoir body can be configured with a standard size and shape while another portion is configured with a size and shape that varies between two or more configurations. For example, FIG. **8** shows reservoir bodies **124***a*–**124***c* that respectively include shoulder portions **132***a*–**132***c*, which are similarly configured with respect to one another. Such shoulder portions have a width that is substantially the same as a corresponding width of the ink-container lid. Reservoir bodies **124***a*–**124***c* also respectively include rear portions **134***a*–**134***c*, which are differently configured with respect to one another. Such rear portions have a width that is less than a corresponding width of the ink-container lid. The shoulder portions and the rear portions are joined by rim portions **136***a*–**136***c* that include latching surfaces **138***a*–**138***c*. Configuring a portion of a reservoir body, such as shoulder portions **132***a*–**132***c*, with a standard size and shape improves compatibility between different ink containers, similar to the compatibility provided by a standard ink-container lid **122**. For example, different ink containers that have similarly configured shoulder portions, but which may have rear portions of differing sizes, can be secured by the same latching member.

Reservoir body **124** may be configured to serve as a handling portion of an ink container. An ink container may be physically held and manipulated when an ink container is loaded and unloaded from an ink-container bay of an ink-supply station. An ink container may also be held at a gripping portion during a refill process, during maintenance, or during various other situations. Reservoir body **124** may be used to handle the ink container in such instances. The reservoir body may be sized and shaped for comfortable and secure gripping. Furthermore, a surface of the reservoir body may be adapted to enhance gripping traction, such as by texturing the surface. The shape of the reservoir body may also facilitate inserting the printing-fluid container into a corresponding ink-container bay of an ink supply station. For example, the lack of symmetry across a horizontal axis helps define a top and a bottom that a user may easily appreciate, thus simplifying installation of the ink-container into a corresponding ink-container bay.

As mentioned above, an ink-container lid may include one or more interface features corresponding to complementary features of an ink-container bay adapted to receive the ink container. For example, as shown in FIG. **5**, ink-container lid **122** includes an interface package **150** comprising an alignment pocket **152**, a keying pocket **154**, a top fluidic interface in the form of an air-interface **156**, a bottom fluidic interface in the form of an ink-interface **158**, and an electrical interface **160**. Interface package **150** is positioned interior an outer perimeter **128** of ink-container lid **122**. In other words, the constituent features of interface package **150** are not positioned around a lateral edge of the ink-container lid, or elsewhere on the reservoir body.

As described in more detail below, interface package **150** is an exemplary collection of mechanical, fluidic, and electrical interfaces adapted to enable and/or enhance ink delivery from the ink container. Interface package **150** is provided as a nonlimiting example, and other arrangements may include additional and/or alternative features. Furthermore, the positioning of the various features may vary from the illustrated embodiment.

FIG. **5** shows an exemplary alignment pocket **152** configured to position an ink container in a desired location with a desired orientation. Such positioning facilitates the mating of an ink container with an ink-container bay. In particular, an alignment pocket may be used to position an ink container in the proper position so that various aspects of the ink container align for coupling with corresponding aspects of

an ink-container bay. For example, keying pocket **154** can be aligned with a corresponding key post of the ink-container bay. Air-interface **156** and ink-interface **158** can be aligned with corresponding air and ink connectors of the ink-container bay. Electrical interface **160** can be aligned with a corresponding electrical contact of the ink-container bay.

Alignment pocket **152** may be recessed from a leading surface of the printing-fluid container, thus providing a robust interface that is less prone to damage compared to a tower interface protruding from the leading surface of the printing-fluid container. In some embodiments, the alignment pocket may recess from a leading surface by 10 millimeters, 15 millimeters, or more. The cross-sectional width of the alignment pocket may be selected to achieve a desired ratio of length to width. In particular, a length/width ratio of approximately 1.5 has been found to limit rotation of a printing-fluid container when mated with a corresponding alignment member. Ratios ranging between 1.0 and 4.0 may be suitable in some embodiments, with ratios between 1.2 and 2.0 being appropriate in most circumstances. The width of the alignment pocket may be selected to be large enough to accommodate alignment members that are mechanically strong enough to resist twisting forces that could result in rotation of the printing-fluid container and misalignment of various interface features.

FIGS. **9–11** and **14–16** show a series of cross-section views in which ink container **120** is being seated into an ink-container bay **170**. FIGS. **9–11** are top views showing ink container **120** moving from an unseated position to a seated position. Similarly, FIGS. **14–16** are side views showing ink container **120** moving from an unseated position to a seated position. Ink-container lid **122** includes an alignment pocket **152** recessed from a center portion of the ink-container lid. In the illustrated embodiment, alignment pocket **152** includes a terminal surface **172** and sidewalls **174** that recess from a generally planar outer-face, or leading surface. The alignment pocket can be sized so that it is deep enough to accommodate a corresponding outwardly projecting alignment member **176** of ink-container bay **170**. Sidewalls **174** may be arranged perpendicular to the outer-face or one or more of the sidewalls may be tapered so that a cross-section area of an opening **178** of alignment pocket **152** is greater than a cross-section area of terminal surface **172**.

A fit between alignment member **176** and alignment pocket **152** can be sufficiently tight so that when the alignment pocket engages the alignment member, ink-container lid **122** is effectively restricted to a desired movement path. In this manner, alignment of the ink-container lid and a corresponding ink-container bay can be ensured. The fit can be established by physical contact between portions of alignment pocket **152** and alignment member **176**. Such contact may be along entire surfaces of the alignment pocket and the alignment member, as shown in the drawings. In some embodiments, contact may occur along less than entire surface portions. In some embodiments, mating of an alignment member with the alignment pocket may be less tight, and the alignment pocket may merely be sized to accommodate a projecting alignment member without tightly engaging the alignment member.

ink-container lid **122** may include a progressive alignment mechanism, in which alignment of the ink-container lid becomes more precise as the ink-container lid is more completely seated in an ink-container bay. For example, outer perimeter **128** may be sized slightly smaller than corresponding sidewalls **180** of ink-container bay **170**, and the ink-container bay may be configured to engage the ink-container lid before the alignment pocket tightly engages the alignment member. Therefore, the outer-perimeter can provide a course alignment for the ink-container lid. The fit between the ink container and sidewalls **180** can be relatively tolerant so that it is easy to initiate the course alignment. Although the course alignment may be less precise than the alignment provided by alignment pocket **152**, the ink container can be in a greater range of positions when the course alignment is initiated compared to when fine alignment is initiated. The ink container and ink-container bay may be configured so that alignment pocket **152** is directed to a position to engage alignment member **176** by the course alignment interaction between outer-perimeter **128**, shoulder portion **132**, and sidewall **180**. In some embodiments, course alignment may not include en actual physical interaction, but rather a visual cue for placing an ink container into a coarsely aligned position.

Alignment member **176** and alignment pocket **152** may be complementarily configured so that a fit between the alignment member and the alignment pocket progressively tightens as the ink-container lid is seated in the ink-container bay. For example, some embodiments of an alignment pocket may be configured with a cross-section area of opening **178** that is greater than a cross-section area of terminal surface **172**. Furthermore, alignment member **176** can be configured with an end **182** that has a cross-section area that corresponds with the cross-section area of terminal surface **172**. Therefore, end **182** may somewhat loosely fit into opening **178**, yet tightly fit when fully seated towards terminal surface **172**. As the alignment member and the alignment pocket are more completely mated with one another, the fit between the alignment pocket and the alignment member may progressively tighten. In some embodiments, an end of an alignment member may include a slight taper or round over that facilitates initiating alignment contact with an alignment pocket.

A progressive alignment system can be used to ensure that aspects of ink-container lid **122** are properly aligned with corresponding features of ink-container bay **170**. In other words, the fit between the alignment pocket and the alignment member may be designed to achieve a desired level of tightness before an aspect of the interface package (e.g. ink-interface, air-interface, keying pocket, electrical interface, etc.) engages a corresponding aspect of an ink-container bay. Progressive alignment may also facilitate initiation of alignment because there is a greater tolerance in ink container positioning at the beginning of seating compared to when the ink container is fully seated into the ink-container bay. Once alignment is initiated, the ink container may be effectively directed into a desired location with a desired orientation with increasing precision. Interaction between aspects of the ink container with aspects of the ink-container bay can be designed to initiate when the desired level of precision has been achieved. The progressive alignment system described above is provided as a nonlimiting example. Other progressive alignment systems may be used. Furthermore, some embodiments may utilize nonprogressive alignment systems.

FIG. **5** shows an exemplary keying pocket **154** configured to ensure that an ink container is seated in a proper ink-container bay. Each bay of an ink supply station may be adapted to receive an ink container holding a particular printing fluid (type of ink, color of ink, fixer, preconditioner, etc.). For example, each ink-container bay may include a key post of unique shape and/or orientation corresponding to the color of ink that that ink-container bay is adapted to receive. Similarly, an ink container holding that color of ink can

include a keying pocket that restrictively mates with a corresponding key post associated with that color. A key post may mate with a keying pocket in a mutually exclusive relationship, meaning that a key post associated with one color of ink would not mate with a keying pocket associated with a different color of ink, or another type of printing fluid. In other words, each color of ink may be keyed by a uniquely configured key post and keying pocket combination. In this manner, a characteristic of the keying pocket of a printing-fluid container may designate the printing fluid held by the container.

A keying pocket can be used to provide physical validation that a fluid container is being inserted into the proper fluid-container bay. For example, a keying pocket may provide tactile feedback during an attempt to load an ink container into an ink-container bay. The keying pocket and/or key post may be configured so that the tactile feedback may be distinctly different depending on whether the ink container is being loaded in a bay set up to deliver the color of ink that the ink container is holding or a different color of ink. A keying pocket can be adapted to prohibit ink containers from being loaded into ink-container bays that do not include a key post corresponding to the keying pocket of the ink-container lid. In some embodiments, such an ink container may be loaded, however the interaction between the non complementary key post and keying pocket can generate a feel that is distinctly different than the feel of complementary keying features engaging one another. For example, there may be more resistance when inserting an ink container that includes a keying pocket that is not complementarily configured relative to the key post engaging the keying pocket.

FIGS. **9–11** show a cross-section view of keying pocket **154** receiving a key post **190** as ink container **120** is being seated into ink-container bay **170**. Keying pocket **154** and key post **190** are complementarily configured based on a corresponding color of ink. A keying pocket, such as keying pocket **154**, can be configured to mate with only key posts corresponding to the correct color of ink. Other ink containers may include similar keying pockets adapted to mate with different key posts associated with different colors of inks. In this manner, each color of ink a printing system is configured to deliver may be associated with a unique combination of a key post and corresponding keying pocket. Though primarily described with reference to keying a particular color of ink, it should be understood that a keying mechanism may be used to key alternative or additional aspects of printing fluids. For example, a particular type of ink, such as photo-ink, may be uniquely keyed to ensure that the proper type of ink is installed in a particular bay. Furthermore, other printing fluids, such as preconditioners and/or fixers, may be keyed to ensure that a fluid container holding such a fluid is installed into a corresponding bay that is configured to deliver such a fluid.

Alignment member **176** can be configured to engage alignment pocket **152** before key post **190** engages keying pocket **154**. Therefore, the alignment member and the alignment pocket can cooperate to ensure that keying pocket **154** is properly positioned for engagement with key post **190**. The alignment member may be longer than the key post in order to facilitate mating of the alignment member and the alignment pocket before mating of the key post and the keying pocket. In such embodiments, the alignment pocket may be deeper than the keying pocket. In some embodiments, the keying pocket and the alignment pocket may be configured to respectively engage a key post and an alignment member at substantially the same time. In some embodiments, the functionality of an alignment pocket and a keying pocket may be incorporated into a single feature configured to position an ink container in a desired location with a desired orientation and ensure that the ink container is seated in a proper ink-container bay.

FIG. **12** schematically shows a cross-section view of exemplary key post **190**, which is configured for insertion into complementarily configured keying pocket **154**. In the illustrated embodiment, key post **190** has a "Y" configuration that includes a first spoke **192**, a second spoke **194**, and a third spoke **196**. An angle α between first spoke **192** and second spoke **194** is the same as an angle α between first spoke **192** and third spoke **196**. An angle θ between second spoke **194** and third spoke **196** is less than angle α. The key post may be described as being symmetrical about a symmetry axis S, which runs through first spoke **192** and bisects angle θ. As illustrated, key post **190** is not symmetrical about any other axis that is coplanar with symmetry axis S.

Keying pocket **154** is shaped to mate with key post **190**, so that each spoke effectively slides into a corresponding slot of the keying pocket. Unique keying interfaces may be based on the same general shape of a particular key post and keying pocket combination, but by rotating the orientation of the combination. For example, a different interface may be configured by rotating a symmetry angle of a key post that has the same general shape as key post **190**. A corresponding keying pocket could be similarly rotated to produce a unique interface combination. For example, a symmetry angle can be rotated in 45° increments to yield 8 unique key post configurations. FIG. **13** shows five such configurations that may be used to key five colors of ink different than the color of ink keyed by key post **190**. The above described key post and keying pocket configurations are provided as a nonlimiting example. Other keying interfaces may be used.

A keying interface may additionally and/or alternatively be varied relative to another keying interface by moving the relative position of the keying interface on an ink container and an associated ink-container bay. For example, using the example described above, in which a key post can be rotated in 45° increments to yield 8 different possible key post configurations; a location of the key post may be selected between 3 different locations to yield a total of 24 (8×3) unique key post configurations. Keying pockets with corresponding locations and orientations may be configured to mate with such key posts. If desired, additional keying configurations may be achieved by decreasing the magnitude of rotation increments, adding key post locations, adding new key post shapes, etc. For example, a key post can be rotated in 22.5° increments to yield 16 different configurations. Similarly, different key post and key pocket shapes can be used, examples of which include "T," "L," and "V" shapes.

As described above, a keying feature and/or alignment feature of an ink container may be configured as a recess that extends into the ink container as opposed to a protuberance that extends outward from the ink container. Such a recess provides a robust interface that is resistant to damage. Furthermore, configuring an ink container with a recess does not disrupt the generally planar profile of the outer-face of an ink-container lid.

FIG. **5** shows exemplary top fluidic interface **156** and exemplary bottom fluidic interface **158**, which are configured to transfer ink, air, or an ink-air mixture to and/or from ink container **120**. As used herein, top fluidic interface **156** may be referred to as an air-interface and bottom fluidic

interface **158** may be referred to as an ink-interface. However, it should be understood that both interfaces may, in some embodiments and/or modes of operation, transfer ink, air, or a mixture thereof. In one exemplary mode of operation, bottom fluidic interface **158** may deliver a printing fluid, while top fluidic interface **156** controls pressure within the printing fluid container.

In the illustrated embodiment, the fluidic interfaces are configured as septa having a ball seal design. The fluidic interfaces are adapted to seal the contents of the ink container so that the contents do not undesirably leak. Each interface is configured to releasably receive a fluid connector, such as a hollow needle, that can penetrate the selective seal of a septum and transfer fluid into and out of the ink container. The septum can be configured to prevent undesired leaking when a fluid connector is inserted and after a fluid connector has been removed. For example, the septum may closely engulf an inserted needle, so that ink or air can pass through the needle, but not between the needle and the septum.

FIGS. **14–16** show fluid connector **200** engaging air-interface **156** and fluid connector **202** engaging ink-interface **158**. Alignment member **176** can be configured to engage alignment pocket **152** before the fluid connectors engage the fluidic interfaces. Therefore, the alignment member and the alignment pocket can cooperate to ensure that the fluidic interfaces are properly positioned for engagement with the fluid connectors. In other words, the alignment interface prevents the fluid connectors from engaging an undesired portion of the ink container, which could cause damage to the fluid connectors. Entry points to the fluidic interfaces can be positioned substantially coplanar with a leading plane of the ink container, as opposed to on alignment posts that extend from an outer-face of the ink container, because the alignment pocket and the alignment member cooperate to properly align the fluidic interfaces.

FIGS. **17–19** show a more detailed view of a sealing member **260** of fluid interface **158**. Sealing member **260** includes a bail sealing portion **262** that is shaped to mate with a yieldably biased plug member to farm a fluid tight seal that prevents undesired fluid leakage when the fluid interface is not engaged by a corresponding fluid connector (FIG. **18**). Sealing portion **260** also includes a needle sealing portion **284** that prevents undesired fluid leakage when the fluid interface is engaged by a corresponding fluid connector (FIG. **19**). As shown in FIG. **18**, a spring member. **268** biases a plug member **268** against ball sealing portion **262** of the sealing member. Sealing portion **262** is complementarily shaped relative to the plug member so that when the plug member is pressed against the sealing portion a fluid tight seal is established. As shown in FIG. **19**, a fluid connector **202** may be inserted through sealing member **260**, and the fluid connector may move the plug member away from the sealing member against a restorative force applied by the spring member. When the plug member is moved away from the sealing member, the fluid tight seal between the sealing member and the plug member is relaxed. However, a fluid tight seal between the fluid connector and the sealing member may be established. As shown in FIG. **20**, fluid connector **202** may include an end portion **270** that has fluid passage features **274** that permit the flow of fluid into a hollow portion **276** of the fluid connector when the fluid connector engages the plug member. The above is provided as a nonlimiting example of a possible configuration for a fluid interface and a corresponding fluid connector. It should be understood that other mechanisms may be used to selectively seal fluid in a fluid container while remaining within the scope of this disclosure. As one example, a slit septum that self seals when a needle is removed may be used.

As shown in FIGS. **14–16**, ink-interface **158** can be positioned near a gravitational bottom of an ink container that is orientated in a seated position in a corresponding ink-container bay. In such a position, fluid connector **202** is also near a gravitational bottom of the ink container. Furthermore, an ink-container reservoir body **124** can be shaped with a bottom surface **204** that slopes towards the fluid connector so that ink can naturally flow to the fluid connector. In other words, bottom surface **204** is gravitationally biased toward a low portion of the ink container. In the illustrated embodiment, the shape of the ink container produces an ink well **206** configured to allow ink to drain into position for access by fluid connector **202**. By virtue of the position of the ink well relative to the remainder of the reservoir, printing fluid may accumulate in the ink well as the level of ink lowers. Fluid connector **202** can continue to draw ink occupying ink well **206** as the ink level lowers during use.

The well, ink-interface, and corresponding fluid connector may be positioned to limit the amount of ink that is stranded in the ink container, thereby minimizing waste. In some embodiments, a printing fluid container may deliver all but at most 2 cubic centimeters of printing fluid, with all but at most 1 cubic centimeter being delivered in most embodiments. As mentioned above, the size of the reservoir body may be increased, thus providing an increased ink capacity. However, such reservoirs may be configured with an ink well similar to ink well **206**, or otherwise be configured so that an ink-interface is near the bottom of the reservoir, thus minimizing the amount of ink that can be stranded within the ink container. In other words, according to this disclosure, the amount of ink that may be stranded inside of an ink container does not have to be proportional to the ink capacity of the ink container.

As shown in FIG. **5**, outer-face **126** of ink-container lid **122** may include a protrusion **210** at which ink-interface **158** is located. In the illustrated embodiment, protrusion **210** is configured to allow a center portion of ink-interface **158**, through which a fluid connector may pass, to be positioned near a low point of the ink-container reservoir. Therefore, a fluid connector may be inserted into the fluidic interface to draw ink from a relatively low area of the ink container, thus facilitating the extraction of a greater percentage of ink from the ink container. Protrusion **210** also allows the ink-interface to be located near the bottom of the ink reservoir while remaining interior outer perimeter **128** of outer-face **126**.

FIG. **21** somewhat schematically illustrates a protrusion **210**, which aligns with a trough **212** that is recessed from a portion of bottom surface **204**, thus forming a well **206**. Well **206** may be gravitationally lower than the remainder of the reservoir, thus facilitating the accumulation of printing fluids in the well as printing fluids are removed from the container. In other words, a well portion **207** of the bottom surface may be recessed from a remainder of the bottom surface. To enhance the accumulation of printing fluids in well **206**, bottom surface **204** may be gravitationally biased toward the well, so that printing fluids may effectively flow "downhill" to the well. Bottom surface **204** may be shaped without any false wells, which could accumulate trapped printing fluid without a fluid path to well **206**.

Protrusion **210** and trough **212** may be substantially aligned with one another, as illustrated in the depicted embodiment. When so aligned, an outline of the downward

edge of the leading surface traces an outline of the downward edge of the bottom surface. Protrusion **210** and trough **212** may be horizontally aligned relative to ink-container lid **122**. The protrusion and trough may additionally or alternatively be horizontally aligned relative to an insertion axis of the ink-container bay. In other words, the protrusion may be positioned on the ink-container lid so that when the ink container is installed into a corresponding ink-container bay, the protrusion, and/or a fluid interface on the protrusion, is positioned substantially equidistant from either side of the ink-container bay.

In FIG. **21**, a fluid level **214** is schematically illustrated and shows how much ink may be drawn from the printing-fluid container when the container includes a well. In contrast, FIG. **22** schematically illustrates a fluid level **216** of a container that does not include a well. As can be appreciated by comparison, well **206** limits the amount of stranded printing fluid. While the depth of fluid level **214** and fluid level **216** may be comparable, the volume of printing fluid associated with fluid level **214** is considerably less than the volume of printing fluid associated with fluid level **216**. Well **206** may be configured so that the cross-sectional area of the portion of a fluid container that bounds fluid level **214** is less than the cross-sectional area of the portion of a fluid container that bounds fluid level **216**, thus decreasing the respective volumes assuming similar depths. In some embodiments, well **206** may be configured to reduce the top surface area (and corresponding volume) of a fluid level that corresponds to an effectively empty fluid container by at least 75%, and usually by 90% or more. Furthermore, as mentioned above, the capacity of the remainder of an ink container may be increased without changing the size of the well and without generating an increase in the amount of printing fluid that will be stranded in the container. Well **206** may be variously sized and shaped. As a general rule, the volume of well **206** may be decreased to lessen the amount of printing fluid that may be stranded within the container. Well **206** may be sized to accommodate a fluid interface with enough additional volume to allow the free flow of printing fluid into the well.

Air-interface **156** may be positioned gravitationally above ink-interface **158** when an ink container is orientated in a seated position in a corresponding ink-container bay. Top fluidic interface **156** may function as a venting port configured to facilitate pressure equalization in the ink container. When ink is drawn from ink-interface **158**, air-interface **156** may allow air to enter the ink-container reservoir to equalize the pressure therein. Similarly, if ink is returned to the ink container, the air-interface may vent air out of the ink container. As mentioned above, the top fluidic interface may be fluidically coupled to a vent chamber **90** configured to reduce ink evaporation and/or other ink loss. As described and illustrated herein, an ink container (and a corresponding ink-container bay or other mechanism for seating an ink container) may be configured for lateral installation. A configuration which facilitates lateral installation also provides design flexibility in a printing system. In particular, a lateral installation allows a printing system to be designed for front, back, or side loading of an ink container, as opposed to being restricted to top loading.

As illustrated in FIG. **2**, an ink-interface may be an active interface, which is fluidically coupled to a pump **74** that is configured to control the delivery of ink to and from the ink container. An air-interface may be a passive interface, which is not directly controlled by a pump, but rather is configured to allow a pressure balance to be naturally achieved. It should be understood that the illustrated embodiment is provided as a nonlimiting example, and that other configurations are within the scope of this disclosure. For example, in some embodiments, an air-interface may be an active interface that is actively controlled to produce a desired pressure within the ink container.

FIG. **5** shows an electrical interface **160** that is configured to provide a communication and/or power path for one or more electrical devices of ink container **120**. Electrical interface **160** may include one or more electrical contacts **162** that are adapted to electrically link with corresponding electrical contacts of an ink-container bay. When the ink container is seated in the ink-container bay, electric current may travel across the electrical linkage. In this manner, information and/or power may be conveyed across the linkage. For example, an ink container may include a memory device **164**, and the electrical interface may be used to write data to the memory device and/or read data from the memory device. For example, a memory may be configured to store electronic keying information that can be used to validate that an ink container is loaded into an ink-container bay configured to deliver the proper printing fluid. If a mistake is detected, electronic keying may be used to disable printing to avoid contaminating the ink delivery system. The memory may also include an expiration date and/or information regarding the relative amount of ink remaining in the associated ink container. In some embodiments, an electrical interface may include additional or alternative componentry, such as an application specific integrated circuit.

Alignment pocket **152** may be positioned approximately at a center of outer-face **126**, and the other interfaces of interface package **150** may be arranged around the alignment pocket. In this manner, air-interface **156**, ink-interface **158**, electrical interface **160**, and keying pocket **154** may be positioned between the alignment pocket and outer perimeter **128**. As used herein, the term "center" refers to a position relatively distal the outer perimeter of the outer-face of the ink container. The center of an outer-face of an ink container may vary depending on the size and shape of the ink container.

Positioning the alignment pocket near the center of the outer-face allows each of the other interfaces to be located relatively near the alignment pocket. Positioning alignment pocket **152** proximate the other interfaces may facilitate aligning those interfaces with corresponding features of an ink-container bay. For example, positioning the interfaces proximate the alignment pocket may decrease the effect of any tolerance that exists in the alignment interface. Therefore, if the alignment interface permits some variation in the alignment, the other interfaces may remain within an acceptable position for engaging corresponding portions of an ink-container bay. In other words, the effects of any movement allowed by the alignment interface may be amplified in proportion to the relative distance from the alignment pocket. Therefore, such effects may be minimized by positioning the various interface features proximate the alignment pocket.

As illustrated in FIG. **5**, fluidic interfaces of an ink container may be located along a vertical axis V of the front surface of the printing-fluid container. Alignment pocket **152** may also be located along vertical axis V, so that vertical axis V intersects top fluidic interface **156**, bottom fluidic interface **158**, and alignment pocket **152**. Similarly, electrical interface **160** and/or keying pocket **154** may be located along a horizontal axis H of the front surface of the printing-fluid container. Alignment pocket **152** may also be located along horizontal axis H, so that horizontal axis H intersects the electrical interface, the keying pocket, and the alignment

pocket. In other words, the alignment package may be arranged in a "cross" configuration with the alignment pocket located at the center of the cross (the intersection of vertical axis V and horizontal axis H). In some embodiments, horizontal axis H may bisect the segment of vertical axis V between top fluidic interface **156** and bottom fluidic interface **158** and/or vertical axis V may bisect the segment of horizontal axis H between electrical interface **160** and keying pocket **154**. Furthermore, as shown in FIG. **5**, vertical axis V may be an axis of symmetry, wherein the basic shape of the fluid-container is the same to the left and right of the axis. As used with relation to an axis and an interface feature, the term "intersect" means that at least a portion of the interface feature is crossed by the axis. Therefore, a common axis may intersect two or more features, although the precise centers of such features are not aligned on the axis.

FIG. **23** shows an exemplary ink container **220** that includes latch slots **222** adapted to provide a latching surface for side-latch members of an ink-container bay. FIGS. **24–26** show ink container **220** as it engages ink-container bay **224**. In the illustrated embodiment, ink-container bay **224** includes a side-latch member **226** that is configured to releasably secure the ink container in a seated position in the ink-container bay. The side-latch member may be resiliently movable between at least a closed position and an open position. For example, the side-latch member may be biased in a closed position in which the side-latch member is positioned to contact an ink container when an ink container is seated into the ink-container bay. As the ink container is moved into the ink-container bay the ink container causes the side-latch member to flex into an open position, as shown in FIG. **25**. As shown in FIG. **26**, the side-latch member resiliently returns to a closed position when the ink container is seated in the ink-container bay. Side-latch member **226** includes a catch **228** that engages latch slot **222**, thus holding ink container **220** in a seated position in the ink-container bay. The ink container may be unseated by moving the side-latch member to an open position.

A pair of latch slots located on opposite sides of an ink container may be positioned coplanar with an alignment pocket. For example, latch slots **222** may be positioned on the same plane as alignment pocket **230**. In the illustrated embodiment, the latching surfaces and alignment pocket are each intersected by a common horizontally extending plane. Keying pocket **232** and electrical interface **234** may also be positioned on the same plane. It should be understood that other latching mechanisms may be configured to apply latching pressure along a plane that passes through an alignment pocket. In some embodiments, a latch slot may be positioned on another plane that intersects an alignment pocket, such as on a vertical plane that intersects an alignment pocket and one or more fluidic interfaces.

FIGS. **27–29** show another embodiment in which another latching mechanism is employed. As illustrated, an ink-container bay **240** includes an alignment member **242** that in turn includes an inner-latch member **244**. Inner-latch member **244** is configured to selectively engage an alignment pocket **246** when an ink container **248** is seated in the ink-container bay. The inner-latch member may be resiliently movable between at least a closed position and an open position. For example, the inner-latch member may be biased in a closed position in which the inner-latch member is positioned to contact alignment pocket **246** when the ink container is seated into the ink-container bay. As the ink container is moved into the ink-container bay the ink container causes the inner-latch member to flex into an open position, as shown in FIG. **28**. As shown in FIG. **29**, the inner-latch member resiliently returns to a closed position when the ink container is seated in the ink-container bay. Inner-latch member **244** includes a catch **250** that engages a corresponding latching tab **252** of alignment pocket **246**, thus holding ink container **248** in a seated position in the ink-container bay. The ink container may be unseated by moving the inner-latch to an open position.

The above described side-latch and inner-latch mechanisms are provided as nonlimiting examples of possible latching configurations. A side-latch mechanism and an inner-latch mechanism may be used cooperatively or independently of one another. Similarly, a side-latch mechanism and/or an inner-latch mechanism may additionally or alternatively be used with respect to other latching mechanisms, such as the latching mechanism described with reference to FIGS. **3** and **4**. Other suitable latching mechanisms may also be used.

As described above with reference to the illustrated embodiments, an ink container may include an interface package with one or more fluidic, mechanical, and/or electrical interfaces. The ink container may be described as having a leading surface, which is configured to be laterally inserted into an ink-container bay of an ink supply station. The leading surface of an ink container may be configured as a substantially planar outer-surface. Each of the respective interfaces of the interface package may be located on the substantially planar leading surface of the ink container. The leading surface may be described as having an outer perimeter, and the respective interfaces of the interface package may be located interior the outer perimeter. The illustrated embodiments show a nonlimiting example of a configuration for arranging an interface package. It should be understood that other arrangements are within the scope of this disclosure.

Although the present disclosure has been provided with reference to the foregoing operational principles and embodiments, it will be apparent to those skilled in the art that various changes in form and detail may be made without departing from the spirit and scope defined in the appended claims. The present disclosure is intended to embrace all such alternatives, modifications and variances. Where the disclosure or claims recite "a," "a first," or "another" element, or the equivalent thereof, they should be interpreted to include one or more such elements, neither requiring nor excluding two or more such elements.

What is claimed is:

1. A printing-fluid container, comprising:

a lid having an outer-face with a substantially planar profile; and

a reservoir body configured to couple with the lid;

wherein the lid and the reservoir body collectively define an inner cavity configured to hold a volume of ink when the lid is coupled to the reservoir body; and

wherein the reservoir body includes a shoulder portion having a width that is approximately the same as a width of the lid, and a rear portion having a width that is less than the width of the shoulder portion, end wherein the war portion and the shoulder portion are connected by a rim portion that is approximately parallel to the lid, and wherein the rim portion includes a latching surface configured to be engaged by a latching member of an ink-container bay when the latching member is a closed position, thereby providing for retention of the printing-fluid container in the ink-container bay.

2. The printing-fluid container of claim 1, wherein the shoulder portion is sized to mate with an ink-container bay of an ink-container supply station, and the rear portion is selectively sized to cooperate with the shoulder portion to provide a desired amount of ink capacity.

3. The printing-fluid container of claim 1, further comprising an interface package arranged on the outer-face of the lid.

4. The printing-fluid container of claim 3, wherein the interface package includes an alignment pocket configured to position the printing-fluid container in a desired location with a desired orientation.

5. The printing-fluid container of claim 4, wherein the alignment pocket is positioned approximately at a center of the outer-face.

6. The printing-fluid container of claim 3, wherein the interface package includes a keying pocket configured to prevent the printing-fluid container from being seated in an ink-container bay adapted to deliver a color of ink different than a color of ink contained by the printing-fluid container.

7. The printing-fluid container of claim 3, wherein the interface package includes an electrical interface.

8. An off-axis printing-fluid container configured to hold a volume of printing fluid, comprising:

a front face including a top edge, a bottom edge, a right edge, and a left edge;

a body including a latching surface spaced rearward the front face, wherein the front face and the body are exterior an inner cavity;

an air interface passing into the inner cavity through the front face proximate the top edge and distal the bottom edge;

a printing-fluid interface passing into the inner cavity through the front face proximate the bottom edge and distal the top edge;

a first recessed portion of the front face intermediate the air interface and the printing-fluid interface; and

a second recessed portion of the front face intermediate the first recessed portion and the right edge, wherein the second recessed portion extends into the inner cavity.

9. The off-axis printing-fluid container of claim 8, wherein the body includes a rear portion having a width less than a width of the front face.

10. The off-axis printing-fluid container of claim 9, wherein the latching surface is intermediate the front face and the rear portion.

11. The off-axis printing-fluid container of claim 10, wherein the latching surface is substantially parallel to the front face.

12. The off-axis printing-fluid container of claim 8, further comprising an electrical interface on the front face intermediate the first recessed portion and the left edge.

13. The off-axis printing-fluid container of claim 8, further comprising a free volume of printing fluid held within the inner cavity.

14. The off-axis printing-fluid container of claim 8, wherein the first recessed portion extends into the inner cavity.

15. The off-axis printing-fluid container of claim 14, wherein the first recessed portion extends at least approximately 15 millimeters from the front face into the inner cavity.

16. The off-axis printing-fluid container of claim 8, wherein the second recessed portion extends at least approximately 12 millimeters from the front face into the inner cavity.

17. The off-axis printing-fluid container of claim 8, wherein the front face and the body define the inner cavity.

18. The off-axis printing-fluid container of claim 8, wherein the first recessed portion is substantially the same distance from the air interface and the printing-fluid interface.

19. The off-axis printing-fluid container of claim 8, wherein the first recessed portion is approximately centered on the front face.

20. The off-axis printing-fluid container of claim 8, wherein a single structural piece forms the front face.

21. The off-axis printing-fluid container of claim 8, wherein the bottom edge includes a protruding portion extending away from the top edge and aligned with the air interface, the first recessed portion, and the printing-fluid interface.

22. A printing-fluid container, comprising:

a lid having an outer-face with a substantially planar profile; and

a reservoir body configured to couple with the lid;

wherein the lid end the reservoir body collectively define an inner cavity configured to hold a volume of ink when the lid is coupled to the reservoir body; and

wherein the reservoir body includes a shoulder portion having a width that is approximately the same as a width of the lid, and a rear portion having a width that is less than the width of the shoulder portion, wherein the rear portion and the shoulder portion are connected by a rim portion that is approximately parallel to the lid, and wherein the shoulder portion is sized to mate with an ink-container bay of an ink-container supply station, and the rear portion is selectively sized to cooperate with the shoulder portion to provide a desired amount of ink capacity.

23. The printing-fluid container of claim 22, further comprising an interface package arranged on the outer-face of the lid.

24. The printing-fluid container of claim 23, wherein the interface package includes an alignment pocket configured to position the printing-fluid container in a desired location with a desired orientation.

25. The printing-fluid container of claim 24, wherein the alignment pocket is positioned approximately at a center of the outer-face.

26. The printing-fluid, container of claim 23, wherein the interface package includes a keying pocket configured to prevent the printing-fluid container from being seated in an ink-container bay adapted to deliver a color of ink different than a color of ink contained by the printing-fluid container.

27. The printing-fluid container of claim 23, wherein the interface package includes an electrical interface.

28. A printing-fluid container, comprising:

a lid having an outer-face with a substantially planar profile; and

a reservoir body configured to couple with the lid;

an interface package arranged on the outer-face of the lid, wherein the interface package includes an electrical interface;

wherein the lid and the reservoir body collectively define an inner cavity configured to hold a volume of ink when the lid is coupled to the reservoir body; and

wherein the reservoir body includes a shoulder portion having a width that is approximately the same as a width of the lid, and a rear portion having a width that is less than the width of the shoulder portion, and wherein the rear portion and the shoulder portion are

connected by a rim portion that is approximately parallel to the lid.

29. An off-axis printing-fluid container configured to hold a volume of printing fluid, comprising:

a front face including a top edge, a bottom edge, a right edge, and a left edge;

a body including a latching surface spaced rearward the front face, wherein the front face and the body are exterior an inner cavity;

an air interface passing into the inner cavity through the front face proximate the top edge and distal the bottom edge;

a printing-fluid interface passing into the inner cavity through the front face proximate the bottom edge and distal the top edge;

a first recessed portion of the front face intermediate the air interface and the printing-fluid interface;

a second recessed portion of the front face intermediate the first recessed portion and the right edge; and

an electrical interface on the front face intermediate the first recessed portion and the left edge.

30. The off-axis printing-fluid container of claim **29**, wherein the body includes a rear portion having a width less than a width of the front face.

31. The off-axis printing-fluid container of claim **30**, wherein the latching surface is intermediate the front face and the rear portion.

32. The off-axis printing-fluid container of claim **31**, wherein the latching surface is substantially parallel to the front face.

33. The off-axis printing-fluid container of claim **29**, further comprising a free volume of printing fluid held within the inner cavity.

34. The off-axis printing-fluid container of claim **29**, wherein the first recessed portion extends into the inner cavity.

35. The off-axis printing-fluid container of claim **34**, wherein the first recessed portion extends at least approximately 15 millimeters from the front face into the inner cavity.

36. The off-axis printing-fluid container of claim **29**, wherein the second recessed portion extends into the inner cavity.

37. The off-axis printing-fluid container of claim **36**, wherein the second recessed portion extends at least approximately 12 millimeters from the front face into the inner cavity.

38. The off-axis printing-fluid container of claim **29**, wherein the front face and the body define the inner cavity.

39. The off-axis printing-fluid container of claim **29**, wherein the first recessed portion is substantially the same distance from the air interface and the printing-fluid interface.

40. The off-axis printing-fluid container of claim **29**, wherein the first recessed portion is approximately centered on the front face.

41. The off-axis printing-fluid container of claim **29**, wherein a single structural piece forms the front face.

42. The off-axis printing-fluid container of claim **29**, wherein the bottom edge includes a protruding portion extending away from the top edge and aligned with the air interface, the first recessed portion, and the printing-fluid interface.

43. An off-axis printing-fluid container configured to hold a volume of printing fluid, comprising:

a front face including a top edge, a bottom edge, a right edge, and a left edge;

a body including a latching surface spaced rearward the front face, wherein the front face and the body are exterior an inner cavity;

an air interface passing Into the inner cavity through the front face proximate the top edge and distal the bottom edge;

a printing-fluid interface passing into the inner cavity through the front face proximate the bottom edge and distal the top edge;

a first recessed portion of the front face intermediate the air interface and the printing-fluid interface;

a second recessed portion of the front face intermediate the first recessed portion and the right edge; and

an electrical interface on the front face intermediate the first recessed portion and the left edge;

wherein the bottom edge includes a protruding portion extending away from the top edge and aligned with the air interface, the first recessed portion, and the printing-fluid interface.

* * * * *

EXHIBIT B

US007104630B2

(12) **United States Patent**
Steinmetz et al.

(10) **Patent No.: US 7,104,630 B2**
(45) **Date of Patent: *Sep. 12, 2006**

(54) **PRINTING-FLUID CONTAINER**

(75) Inventors: **Charlie Steinmetz**, Corvallis, OR (US); **Curt Gonzales**, Corvallis, OR (US); **Daniel W. Petersen**, Philomath, OR (US)

(73) Assignee: **Hewlett-Packard Development Company, L.P.**, Houston, TX (US)

(*) Notice: Subject to any disclaimer, the term of this patent is extended or adjusted under 35 U.S.C. 154(b) by 20 days.

This patent is subject to a terminal disclaimer.

(21) Appl. No.: **10/632,508**

(22) Filed: **Jul. 31, 2003**

(65) **Prior Publication Data**

US 2005/0024452 A1 Feb. 3, 2005

(51) **Int. Cl.**
B41J 2/14 (2006.01)
B41J 2/175 (2006.01)

(52) **U.S. Cl.** **347/49**; 347/86
(58) **Field of Classification Search** 347/7, 347/49, 84, 85, 86, 87, 37
See application file for complete search history.

(56) **References Cited**

U.S. PATENT DOCUMENTS

4,053,902	A		10/1977	Skafvenstedt
4,419,678	A		12/1983	Kasugayama
4,551,734	A		11/1985	Causley
4,700,202	A		10/1987	Kuranishi
4,967,207	A		10/1990	Ruder
5,146,243	A		9/1992	English
5,359,357	A	*	10/1994	Takagi et al. 347/49
5,523,780	A		6/1996	Hirosawa
5,541,631	A		7/1996	Hashimoto
5,600,358	A		2/1997	Baldwin
5,721,576	A	*	2/1998	Barinaga 347/85
5,734,401	A		3/1998	Clark et al.
5,751,319	A		5/1998	Robertson et al.
5,757,390	A		5/1998	Gragg et al.
5,784,087	A		7/1998	Wallace et al.
5,815,183	A	*	9/1998	Sasaki 347/86
5,854,646	A		12/1998	Barinaga et al.
5,956,054	A		9/1999	Hirabayashi
6,048,055	A		4/2000	Hakkaku
6,086,193	A		7/2000	Shimada
6,102,535	A		8/2000	Papenfuhs
6,130,695	A		10/2000	Bullock
6,170,937	B1	*	1/2001	Childers et al. 347/85
6,231,173	B1		5/2001	Pawlowski
6,243,115	B1		6/2001	Baker et al.
6,264,314	B1	*	7/2001	Mochizuki et al. 347/86
6,273,562	B1		8/2001	Deshmukh
6,276,788	B1		8/2001	Hilton
6,283,586	B1		9/2001	Childers
6,286,921	B1		9/2001	Ochi

(Continued)

FOREIGN PATENT DOCUMENTS

DE	32 47 875	8/1983
EP	0562717	9/1993
EP	0 597 628	4/1996
EP	0803364	10/1997
EP	0803365	10/1997
JP	03016738	1/1991
JP	04187448	6/1992
WO	WO 94/07699	4/1994

Primary Examiner—Anh T. N. Vo

(57) **ABSTRACT**

A printing-fluid container designed for lateral insertion into a printing-fluid container bay includes a leading surface. The printing-fluid container also includes an alignment pocket recessed into a center portion of the leading surface. The alignment pocket is configured to mate with an outwardly-extending alignment member of the printing-fluid container bay so as to guide the printing-fluid container into a desired position with a desired orientation.

35 Claims, 9 Drawing Sheets

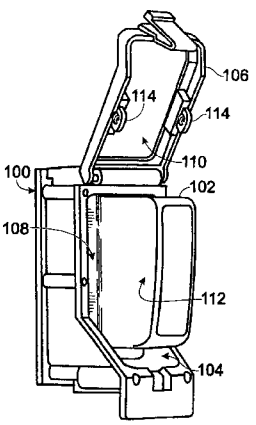

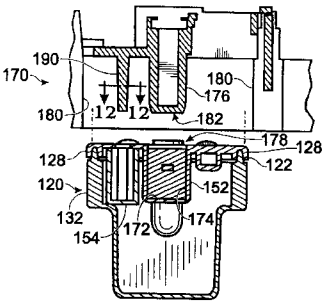

U.S. PATENT DOCUMENTS

6,286,944	B1		9/2001	Shimizu
6,286,945	B1		9/2001	Higuma
6,293,662	B1		9/2001	Shihoh
6,322,205	B1		11/2001	Childers et al.
6,322,207	B1		11/2001	Hall et al.
6,350,024	B1		2/2002	Haines
6,443,567	B1		9/2002	Hayashi
6,450,631	B1		9/2002	Hayashi
6,494,568	B1		12/2002	Hou
6,582,068	B1		6/2003	Ishizawa
6,585,362	B1		7/2003	Blease
6,612,689	B1	*	9/2003	Suenaga et al. 347/85
6,648,460	B1		11/2003	Gonzales
6,666,542	B1		12/2003	Yoshiyama
6,959,985	B1	*	11/2005	Steinmetz et al. 347/86
2001/0017641	A1		8/2001	Kobayashi et al.
2001/0019347	A1		9/2001	Hauck
2001/0020970	A1		9/2001	Kuribayashi et al.
2002/0036680	A1		3/2002	Hall et al.
2002/0044181	A1		4/2002	Suenaga
2002/0080216	A1		6/2002	Dowell et al.
2002/0101487	A1		8/2002	Petersen et al.
2002/0118260	A1		8/2002	Waggoner et al.
2002/0158943	A1		10/2002	Powell

* cited by examiner

FIG. 1

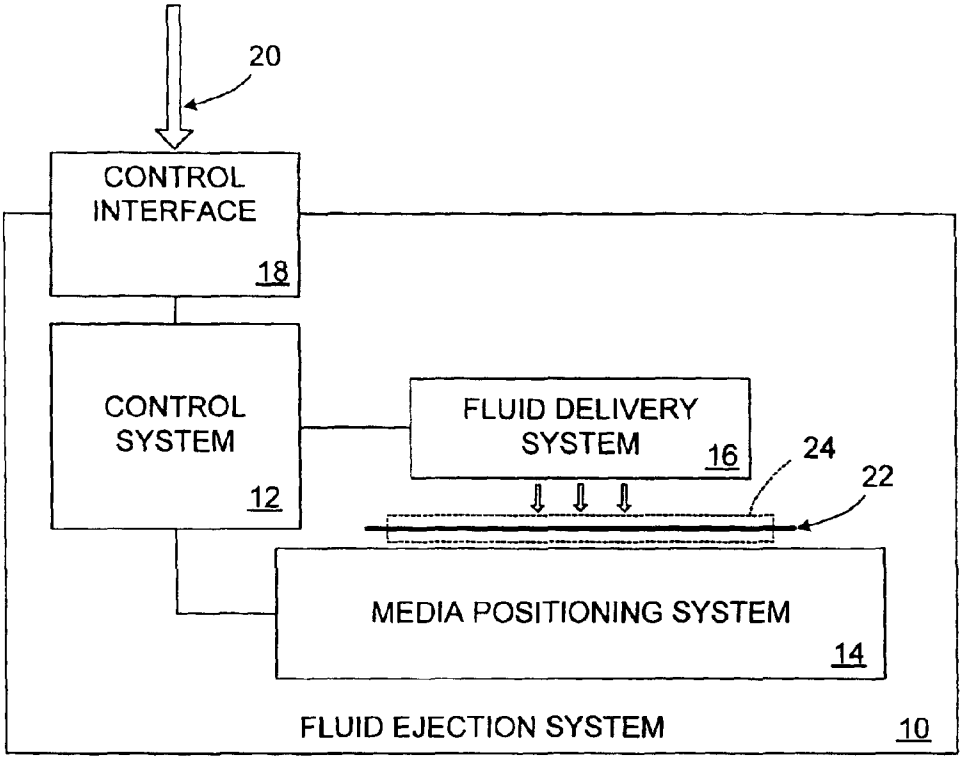
20
CONTROL INTERFACE
18
CONTROL SYSTEM
12
FLUID DELIVERY SYSTEM
16
24
22
MEDIA POSITIONING SYSTEM
14
FLUID EJECTION SYSTEM
10

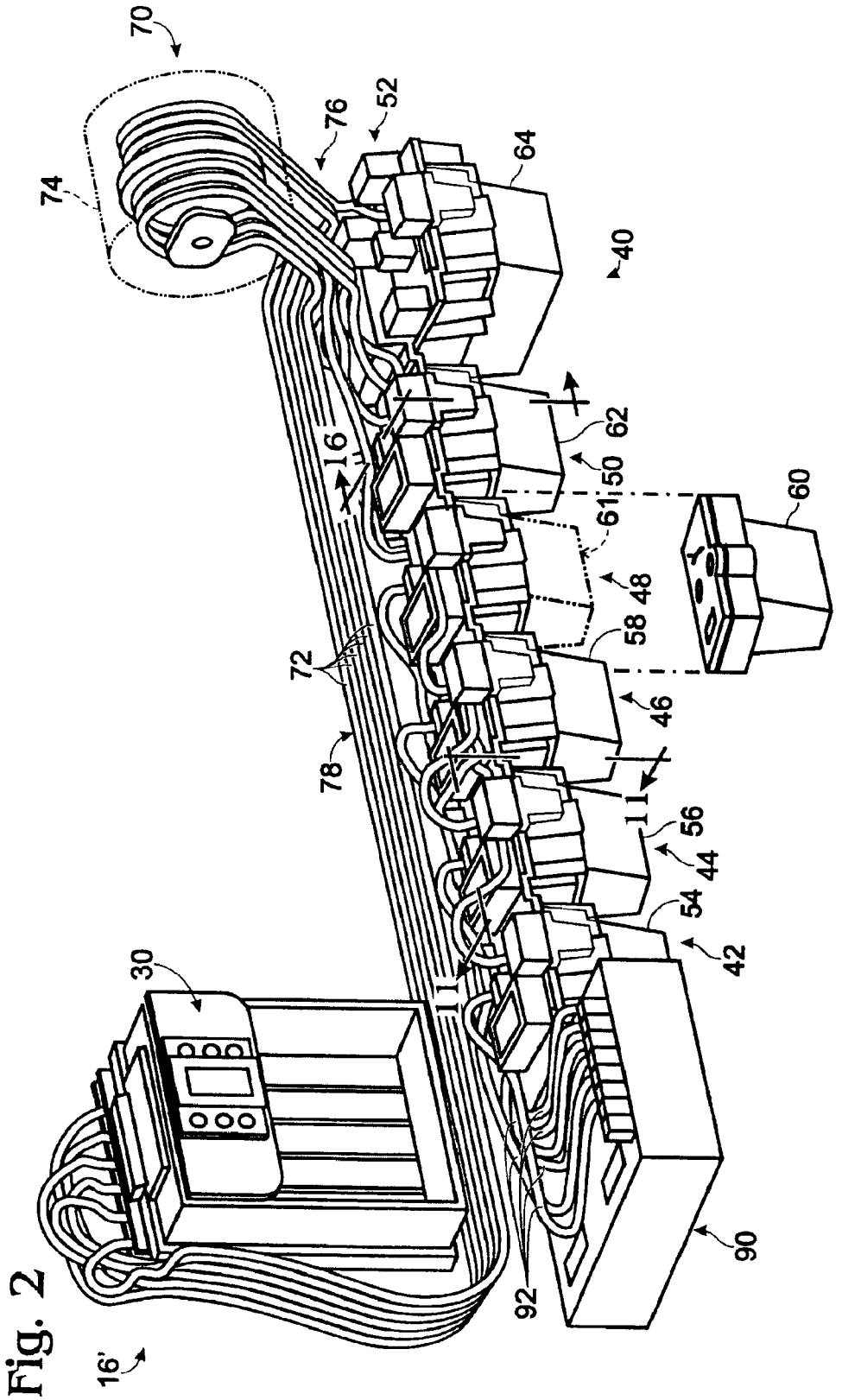
70
76
52
64
74
40
62
16
50
61
60
48
58
72
46
78
11
56
44
54
42
30
11
90
92
16'

Fig. 2

Fig. 3

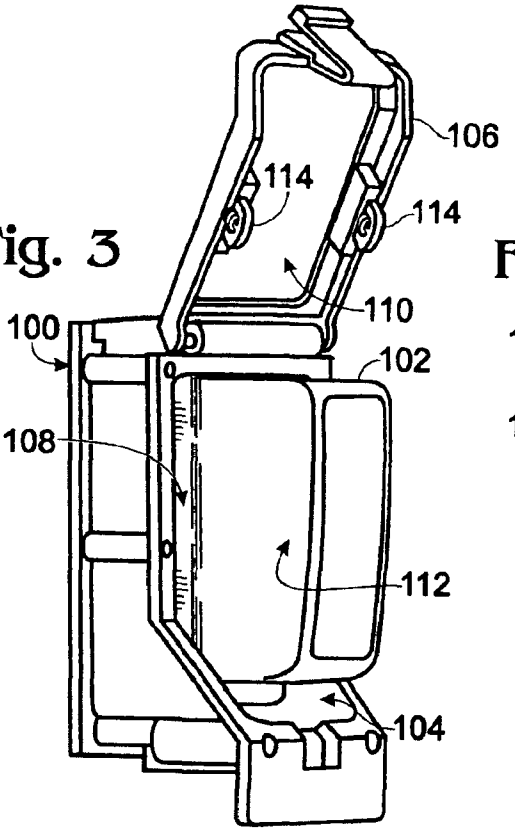

Fig. 4

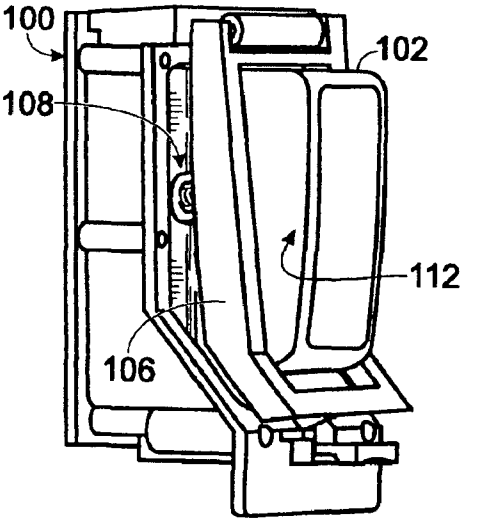

Fig. 5

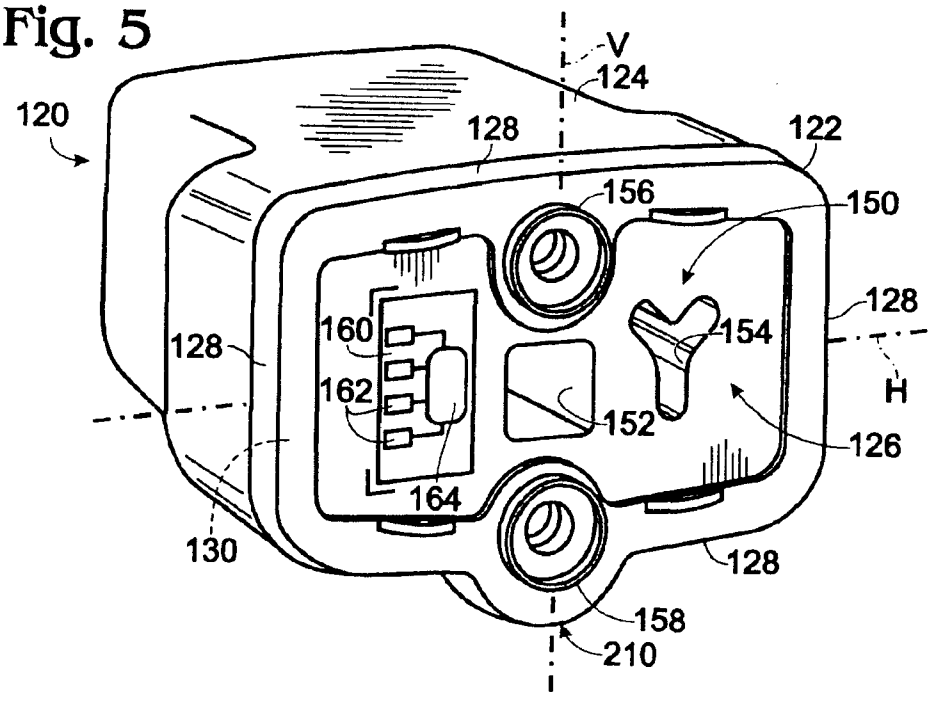

Fig. 6

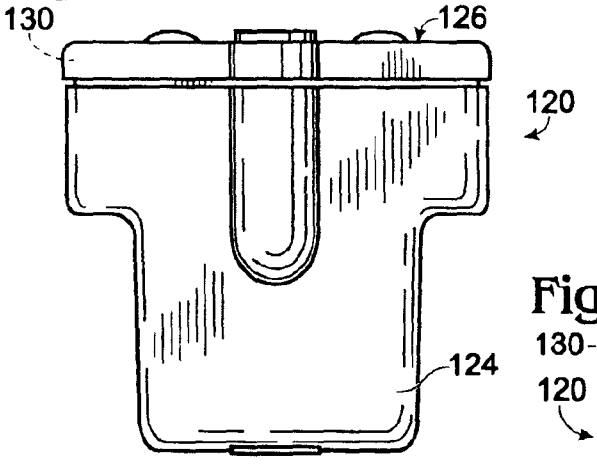

Fig. 7

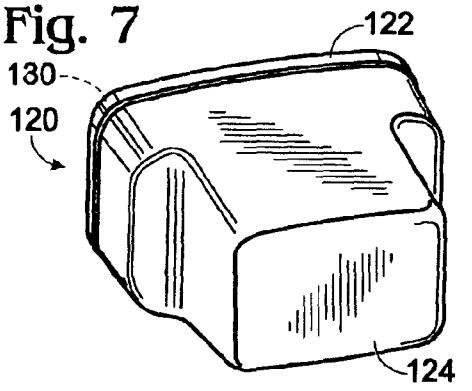

Fig. 8

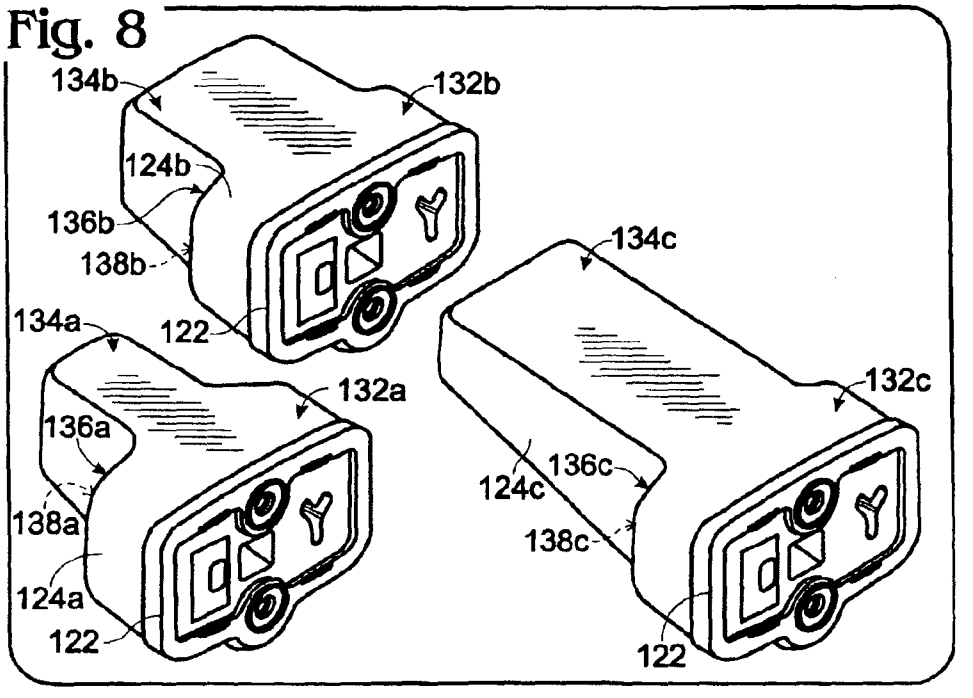

Fig. 9

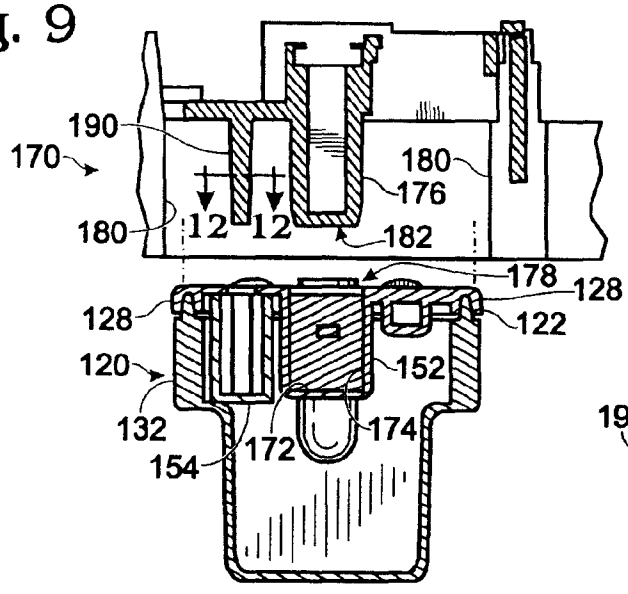

Fig. 12

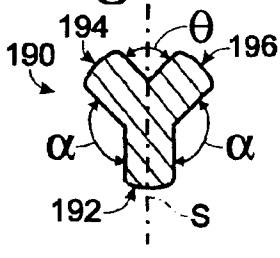

Fig. 10

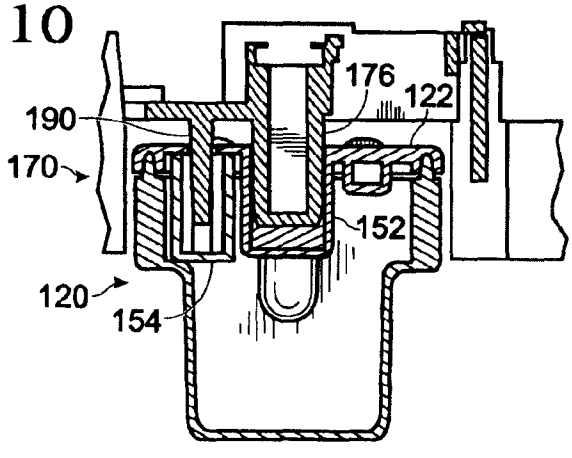

Fig. 13

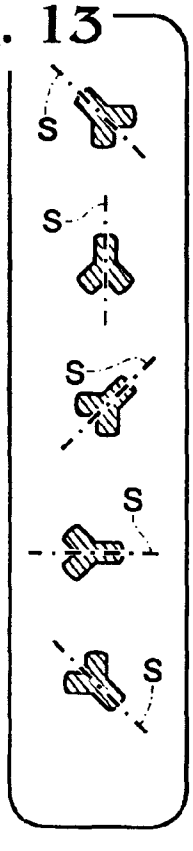

Fig. 11

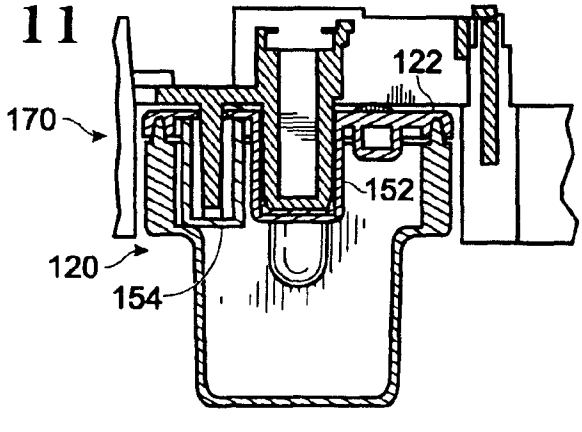

Fig. 14

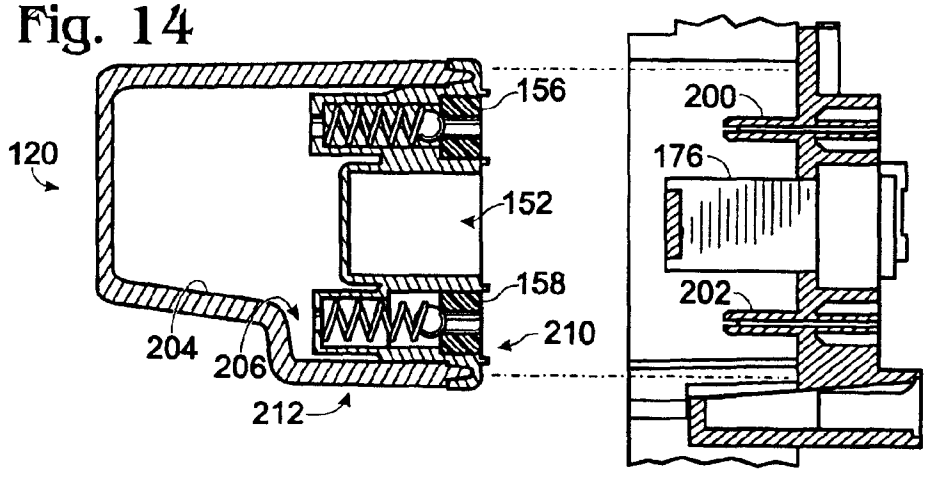

Fig. 15

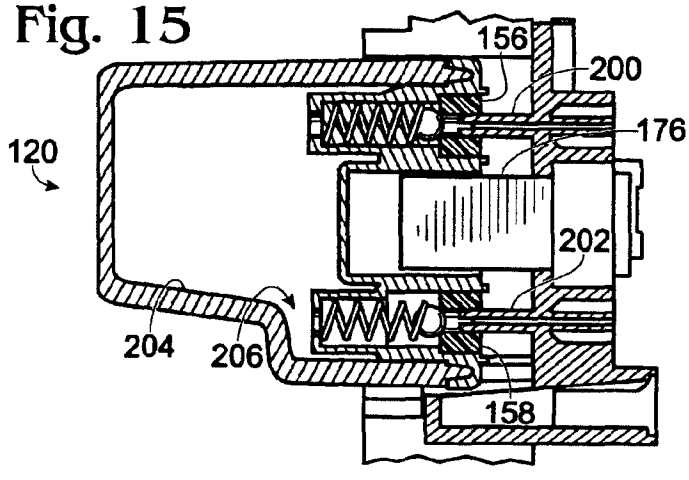

Fig. 16

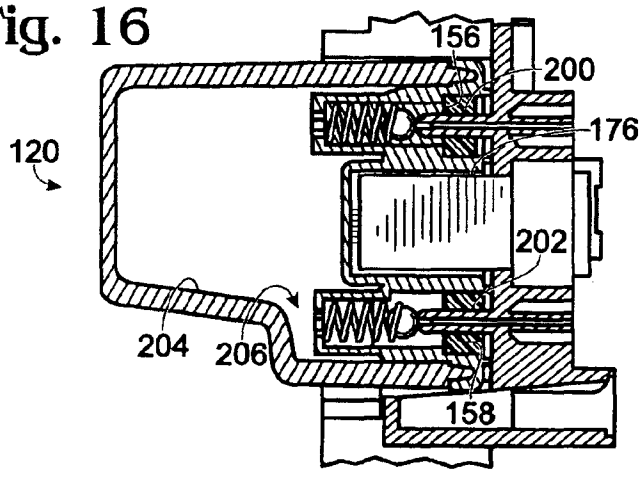

Fig. 17

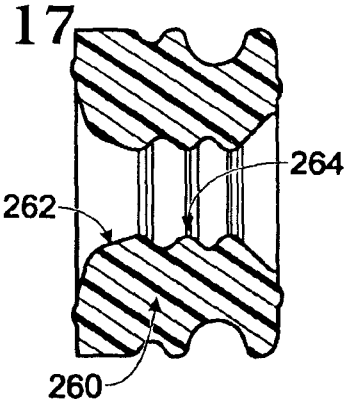

Fig. 18

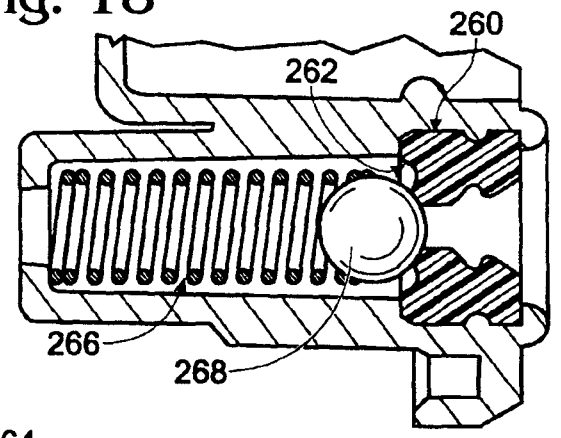

Fig. 19

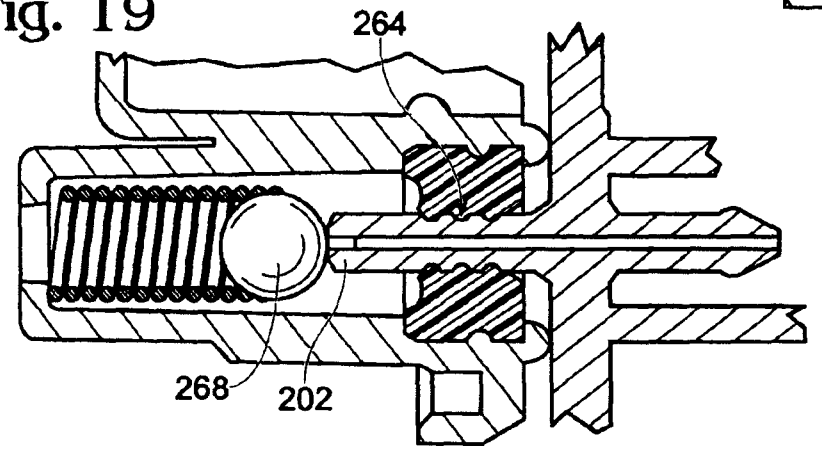

Fig. 20

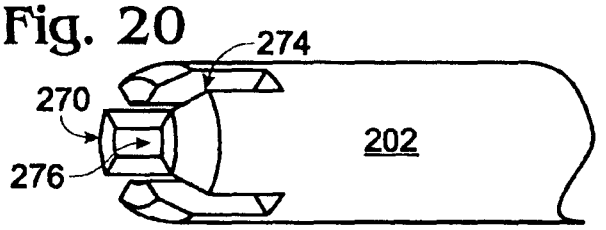

Fig. 21

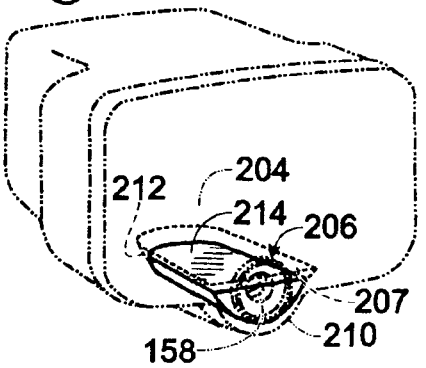

Fig. 22

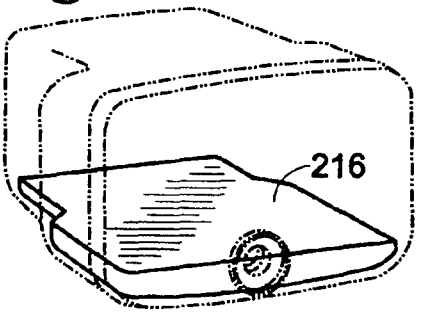

Fig. 24

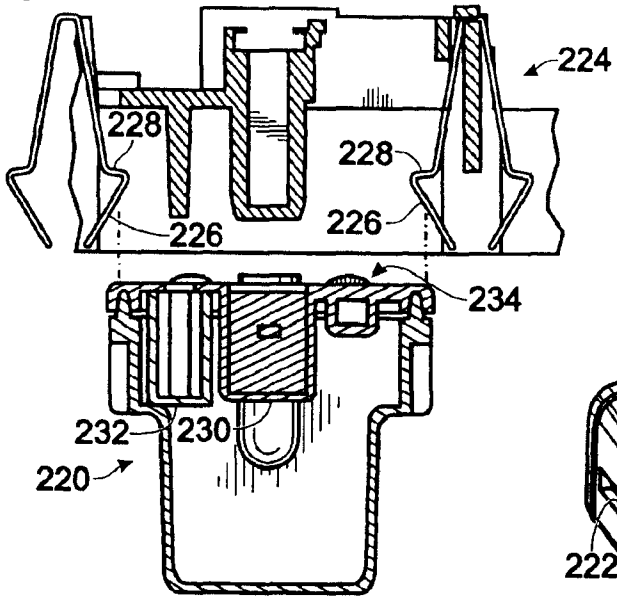

Fig. 23

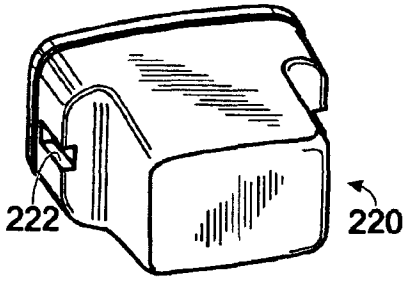

Fig. 25

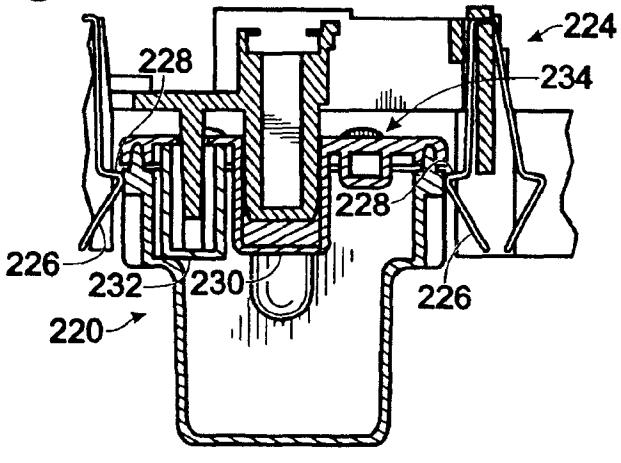

Fig. 26

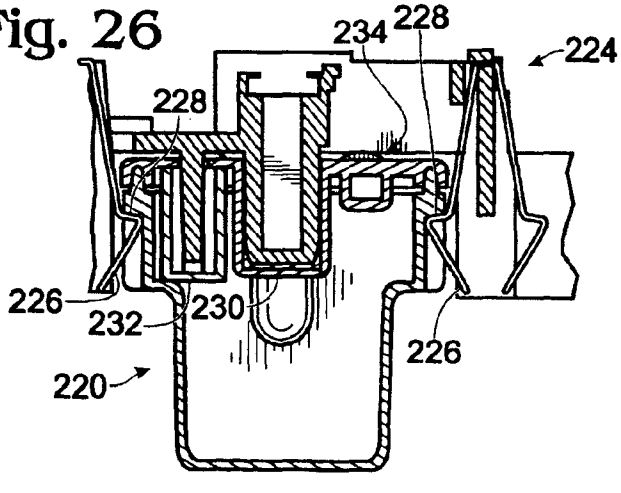

Fig. 27

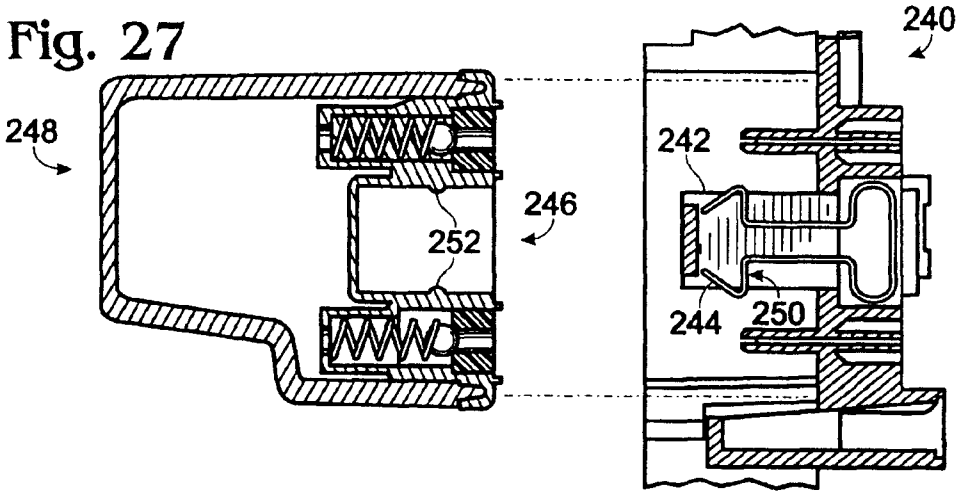

Fig. 28

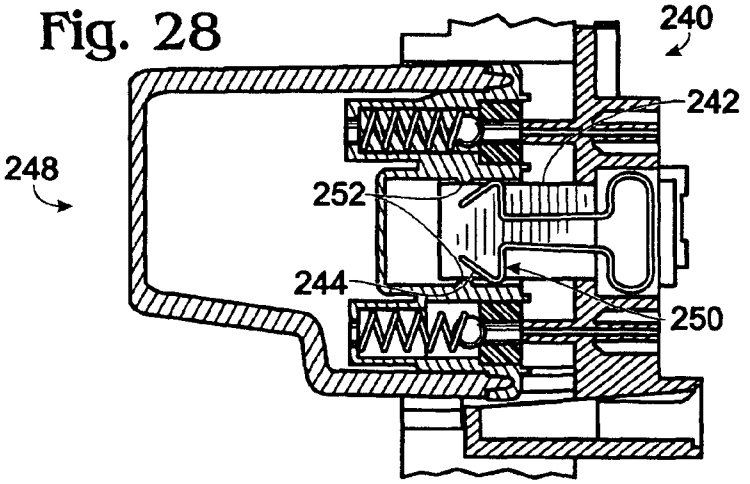

Fig. 29

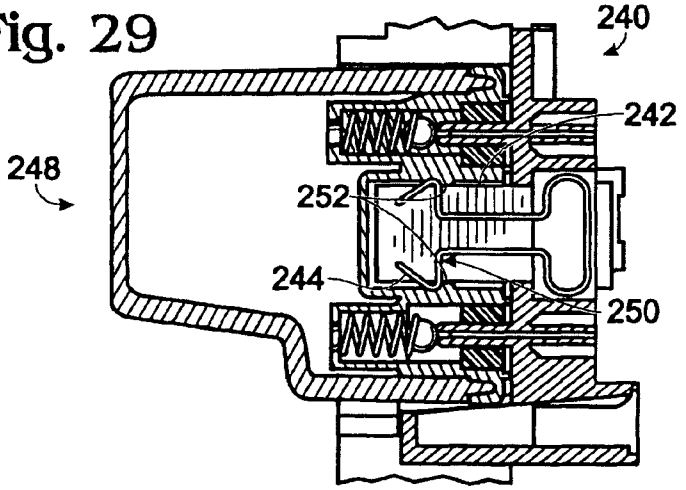

PRINTING-FLUID CONTAINER

BACKGROUND

Inkjet printing systems often utilize one or more replaceable ink containers that hold a finite volume of ink. An ink container can be replaced if the ink container is unable to deliver ink. For example, an ink container can be replaced if all of the ink in the ink container is used and the ink container is empty. Many known ink containers are unable to deliver all of the ink in the ink container and are considered to be effectively empty although some ink remains in the ink container. Such ink containers can be replaced when the ink container ceases to adequately deliver ink. Users generally prefer ink containers that do not have to be frequently replaced. Furthermore, users generally prefer ink containers that are relatively easy to replace when replacement is necessary.

BRIEF DESCRIPTION OF THE DRAWINGS

FIG. **1** is a schematic view of a fluid ejection system according to an embodiment of the present invention.

FIG. **2** is a somewhat schematic view of an embodiment of a printing-fluid delivery system as used in the fluid ejection system of FIG. **1**.

FIG. **3** shows an embodiment of a printing-fluid container bay in an open position as used in the fluid delivery system of FIG. **2**.

FIG. **4** shows the printing-fluid container bay of FIG. **3** in a closed position.

FIG. **5** shows a front isometric view of a printing-fluid container according to an embodiment of the present invention.

FIG. **6** shows a bottom view of the printing-fluid container of FIG. **5**.

FIG. **7** shows a back isometric view of the printing-fluid container of FIG. **5**.

FIG. **8** shows a set of three printing-fluid containers formed by combining three different reservoir bodies with three similarly configured lids.

FIGS. **9**–**11** show top cross-section views of a printing-fluid container being seated into a printing-fluid container bay according to an embodiment of the present invention.

FIG. **12** shows a cross-section view of a key post configured to mate with a corresponding keying pocket of a printing-fluid container according to an embodiment of the present invention.

FIG. **13** shows five key posts configured to respectively key five different printing fluids.

FIGS. **14**–**16** show side cross-section views of a printing-fluid container being seated into a printing-fluid container bay according to an embodiment of the present invention.

FIG. **17** shows a cross-section view of a sealing member of the printing-fluid container of FIGS. **14**–**16**.

FIG. **18** is a somewhat schematic view of a ball seal mechanism of the printing-fluid container of FIGS. **14**–**16**.

FIG. **19** shows the ball seal mechanism of FIG. **18** engaged by a fluid connector.

FIG. **20** shows the fluid connector of FIG. **19**.

FIG. **21** schematically shows a printing-fluid level of a printing-fluid container that includes a well.

FIG. **22** schematically shows a printing-fluid level of a printing-fluid container that does not include a well.

FIG. **23** shows a back isometric view of a printing-fluid container according to an embodiment of the present invention.

FIGS. **24**–**26** show top cross-section views of a printing-fluid container being seated into a printing-fluid container bay according to an embodiment of the present invention.

FIGS. **27**–**29** show side cross-section views of a printing-fluid container being seated into a printing-fluid container bay according to an embodiment of the present invention.

DETAILED DESCRIPTION

FIG. **1** schematically shows a fluid ejection system **10**. Although fluid ejection systems may be configured to eject a variety of different fluids onto a corresponding variety of different media in various embodiments, this disclosure focuses on an exemplary printing system that is used to eject, or print, ink onto paper. However, it should be understood that other printing systems, as well as fluid ejection systems designed for nonprinting applications, are also within the scope of this disclosure.

Fluid ejection system **10** includes a control system **12**, a media positioning system **14**, a fluid delivery system **16**, and a control interface **18**. Control system **12** may include componentry, such as a printed circuit board, processor, memory, application specific integrated circuit, etc., which effectuates fluid ejection corresponding to a received fluid ejection signal **20**. Fluid ejection signals may be received via a wired or wireless control interface **18**, or other suitable mechanism. The fluid ejection signals may include instructions to perform a desired fluid ejection process. Upon receiving such a fluid ejection signal, the control system may cause media positioning system **14** and fluid delivery system **16** to cooperate to eject fluid onto a medium **22**. As one example, a fluid ejection signal may include a print job defining a particular image to be printed. The control system may interpret the print job and cause fluid, such as ink, to be ejected onto paper in a pattern replicating the image defined by the print job.

Media positioning system **14** may control the relative positioning of the fluid ejection system and a medium onto which the fluid ejection system is to eject fluid. For example, media positioning system **14** may include a paper feed that advances paper through a printing zone **24** of the fluid ejection system. The media positioning system may additionally or alternatively include a mechanism for laterally positioning a printhead, or other suitable device, for ejecting fluid to different areas of the printing zone. The relative position of the medium and the fluid ejection system may be controlled, so that fluid may be ejected onto only a desired portion of the medium. In some embodiments, media positioning system **14** may be selectively configurable to accommodate two or more different types and/or sizes of media.

FIG. **2** schematically shows an exemplary fluid delivery system in the form of a printing-fluid delivery system **16'**. The printing-fluid delivery system includes a scanning printhead **30**, which may include one or more nozzles adapted to receive a printing-fluid from a fluid supply and eject the printing-fluid onto a print medium. A nozzle may be associated with a fluid ejector, such as a semiconductor resistor, that is operatively connected to a control system. The control system may selectively cause the fluid ejector to heat printing-fluid that is delivered to the fluid ejector. In embodiments that utilize a resistor as a fluid ejector, the resistor may be activated by directing current through the resistor in one or more pulses. Heated printing-fluid may at least partially vaporize and create a printing-fluid bubble. Expansion of the

printing-fluid bubble may cause some of the printing-fluid to be ejected out of the corresponding nozzle onto the print medium. A printhead may be adapted to print a single color of ink, two or more different colors of ink, as well as a preconditioner, fixer, and/or other printing fluid. It is within the scope of this disclosure to utilize other mechanisms for ejecting fluid onto a medium, and printhead **30** is provided as a nonlimiting example. For example, a printhead may include a fluid ejector configured to effectuate fluid ejection via a nonthermal mechanism, such as vibration.

Printing-fluid delivery system **16'** includes an off-axis ink-supply station **40**. An "off-axis" ink-supply may be located apart from a printhead so that the printhead can scan across a printing zone while the ink-supply remains substantially stationary. Such an arrangement may decrease the total weight of a printhead assembly compared to a printhead assembly that includes an on-axis ink-supply. A relatively light printhead assembly may require relatively less energy to move, while moving faster, quieter, and/or with less vibration than a printhead with an integrated on-axis ink-supply. An off-axis ink-supply may be positioned for easy access to facilitate replenishing the ink-supply and may be sized to accommodate a desired volume of ink. As explained in more detail below, an ink-supply station may be configured for front loading so that a printing-fluid container can be laterally inserted into a printing system. The stationary position and relatively easy access of an off-axis ink-supply can allow for relatively large volumes of ink to be stored and delivered.

An off-axis ink-supply may include containers for storing and delivery one or more colors of ink as well as other printing-fluids. For example, ink-supply station **40** includes six ink-container bays configured to accommodate six corresponding ink containers. In the illustrated embodiment, ink-supply station **40** includes yellow bay **42**, dark-magenta bay **44**, light-magenta bay **46**, dark-cyan bay **48**, light-cyan bay **50**, and black bay **52**, which respectively are adapted to receive yellow ink container **54**, dark-magenta ink container **56**, light-magenta ink container **58**, dark-cyan ink container **60**, light-cyan ink container **62**, and black ink container **64**. Other printing systems may be designed for use with more or fewer colors, including colors different than those described above. It should be understood that as used herein, "ink" may be used in a general sense to refer to other printing fluids, such as preconditioners, fixers, etc., which may also held by an ink-container and delivered via a fluid delivery system. Two or more ink containers holding a printing fluid of the same color and/or type may be used in the same printing system. In some embodiments, one or more of the ink-container bays may be sized differently than another ink-container bay. For example, in the illustrated embodiment, black bay **52** is larger than the other ink-container bays, and therefore can accommodate a relatively larger ink container. As is described in more detail below, a particular ink-container bay may accommodate ink containers of differing sizes.

Ink delivery system **16'** includes an ink transport system **70** configured to move ink from the ink-supply station to the printhead. In some embodiments, the ink transport system may be a bi-directional transport system capable of moving ink from the ink-supply station to the printhead and vice versa. An ink transport system may include one or more transport paths for each color of ink. In the illustrated embodiment, ink transport system **70** includes a tube **72** that links an ink container of the ink-supply station to the printhead. In the illustrated embodiment, there are six such tubes that fluidically couple the ink containers to the printhead. A tube may be constructed with sufficient length and flexibility to allow the printhead to scan across a printing zone. Furthermore, the tube may be at least partially chemically inert relative to the ink that the tube transports.

The ink transport system may include one or more mechanisms configured to effectuate the transport of ink through an ink transport path. Such a mechanism may work to establish a pressure differential that encourages the movement of ink. In the illustrated embodiment, fluid transport system **70** includes a pump **74** configured to effectuate the transport of ink through each tube **72**. Such a pump may be configured as a bi-directional pump that is configured to move ink in different directions through a corresponding ink transport path.

An ink transport path may include two or more portions. For example, each tube **72** includes a static portion **76** linking an ink container to the pump and a dynamic portion **78** linking the pump to the printhead. The transport path may also include a pumping portion that effectively links the static portion to the dynamic portion and interacts with the pump to effectuate ink transport. The individual portions of an ink transport path may be physically distinct segments that are fluidically linked by one or more interconnects. In some embodiments, a single length of tube linking an ink container to the printhead may be functionally divided into two or more portions, including static and dynamic portions. In the illustrated embodiment, dynamic portion **78** is adapted to link a stationary ink-supply station to a scanning printhead that moves during printing, and therefore the dynamic portion is configured to move and flex with the printhead. The static portion, which links a stationary ink-supply station to a stationary pump, may remain substantially fixed.

An ink container of ink-supply station **40** may include a vent configured to facilitate the input and output of ink from the container. For example, a vent may fluidically couple the inside of an ink container to the atmosphere to help reduce unfavorable pressure gradients that may hinder ink transport. Such a vent may be configured to limit ink from exiting the ink container through the vent, thus preventing unnecessary ink dissipation. An exemplary vent in the form of a fluidic interface is described in more detail below.

Printing-fluid delivery system **16'** may include a vent chamber **90** configured to reduce ink evaporation and/or other ink loss. Each ink container of ink-supply station **40** may be fluidically coupled to vent chamber **90** via a tube **92** linking the vent of that ink container to the vent chamber. In other words, an ink-container vent may be connected to the vent chamber to facilitate ink transport between an ink container and the printhead. The vent chamber may decrease unfavorable pressure gradients while limiting evaporation of ink to the atmosphere. In some embodiments, vent chamber **90** may include a labyrinth that limits ink loss. Vent chamber **90** may be fixed in a substantially stationary position.

As mentioned above, FIG. **2** somewhat schematically depicts printing-fluid delivery system **16'**. The precise arrangement of the constituent elements of the printing-fluid delivery system may be physically arranged according to a desired industrial design. Similarly, the individual elements may vary from the illustrated embodiments while remaining within the scope of this disclosure. Size, shape, access, and aesthetics are among factors that may be considered when designing a fluid ejection system that utilizes a printing-fluid delivery system according to the present disclosure. Though described and illustrated with reference to an off-axis ink supply, it should be understood that many of the principles

herein described are applicable to on-axis ink supplies. The off-axis ink supply is provided as a nonlimiting example, and on-axis ink supplies are also within the scope of this disclosure.

FIG. **2** shows uninstalled dark-cyan ink container **60** in solid lines. As indicated in dashed lines at **61**, the dark-cyan ink container may be installed into ink-supply station **40**. Similarly, the other ink containers of ink-supply station **40** may be selectively installed and uninstalled. In this manner, an exhausted ink-supply may be replenished by installing a full ink container, thus extending the operational life of a fluid ejection system. The ink-supply station may be configured so that the individual ink containers may be exchanged independently of one another. For example, if only one ink container becomes exhausted, that ink container can be replaced while leaving the other ink containers in place. It should be understood that while FIG. **2** shows ink container **60** being installed into ink-supply station **40** in a generally vertical direction, this is not necessarily required. Ink-supply station **40** may be orientated to receive ink-containers that are laterally installed. Furthermore, a ganged ink supply, which accommodates two or more different printing fluids and/or colors in a common container assembly, may be seated in an ink container bay.

An ink delivery system may include an ink-level monitor configured to track the amount of ink available for delivery. An ink-level monitor may be configured to individually monitor individual ink containers, groups of ink containers supplying the same color of ink, and/or the collective ink-supply of the system. The ink-level monitor may cooperate with a notification system to inform a user of the status of the ink level, thus enabling a user to assess ink levels and prepare for ink replenishment. Furthermore, as described in more detail below, an ink container may include a memory and an associated electrical interface, and information regarding the ink-level of an ink container may be stored on such a memory and conveyed via the electrical interface.

FIGS. **3** and **4** show a more detailed view of an exemplary ink-container bay **100** configured to selectively receive an ink container **102**. FIG. **3** shows ink-container bay **100** in an open position and FIG. **4** shows the ink-container bay in a closed position, in which the ink-container bay is retaining ink container **102**. The ink-container bay may include a seat **104** adapted to pair with a portion of an ink container. In other words, seat **104** and a portion of the ink container may be complementarily configured so that the ink container can be docked in the seat. The seat may be sized and shaped to mate with the size and shape of a portion of an ink container, such as an ink-container lid and/or a shoulder portion of an ink-container reservoir body. The ink-container bay may include a latching member **106** adapted to hold the ink container in place. In the illustrated embodiment, latching member **106** pivots on a hinge to engage a rim portion **108** of ink container **102**. Rim portion **108** is an example of a latching surface, which may be engaged by a latching member to retain an ink container in an ink-container bay. In the illustrated embodiment, latching member **106** includes an open void **110** through which a rear-portion **112** of ink container **102** may extend. A latching member, or a combination of two or more latching members, configured to hold an ink container in place may be configured to accommodate ink containers having different sizes. In some embodiments, a latching member may engage one or more portions of an ink container, such as a latching surface of rim portion **108**. In the illustrated embodiment, latching member **106** includes a plunger **114** configured to engage rim portion **108** on each side of the ink container, while rear portion **112** extends through open void **110**. Plunger **114** includes a resilient member adapted to apply seating pressure to ink container **102** when latching member **106** is in a closed position. In some embodiments, two or more latching members may be separately movable components that facilitate large rear portions, or a unitary latching member can be configured to accommodate large rear portions. Furthermore, in some embodiments, alternative or additional latching mechanisms may be used to hold an ink container in place.

FIGS. **5**–**7** show an ink container **120** that includes an ink-container lid **122** and an ink-container reservoir body **124** that are complementarily configured to collectively define a bounded volume in which ink may be contained. The ink-container lid and the reservoir body may be collectively referred to as a reservoir, ink reservoir, or printing-fluid reservoir. In some embodiments, such a reservoir may be formed from a single structural piece, or two or more pieces that are connected differently that shown in the illustrated embodiment. Lid **122** may include an inner-side that faces towards the inside of the ink container when the reservoir body is coupled to the lid. The lid may include one or more portions adapted to engage a reservoir body or otherwise secure the lid to the reservoir body. In some embodiments, a lid and a reservoir body may be releasably secured to one another while some embodiments may utilize a lid and a reservoir body that are connected in a substantially permanent arrangement. A gasket or other suitable seal may be fit at an interface between lid **122** and reservoir body **124** to enhance the ability of the lid and the reservoir body to hold a volume of ink or other printing fluid.

Ink container **120** may be configured as a free ink container adapted to hold a free volume of ink. As used herein, a free volume of ink refers to a volume of ink that is held within a container without the use of a sponge, foam, ink sack, or similar intermediate holding apparatus and/or back-pressure applying device. A free ink container can be substantially "open" within its boundaries, thus permitting a relatively large percentage of the enclosed volume to be filled with ink, which can flow freely within the reservoir. As described in more detail herein, the design of ink container **120** allows a free volume of ink to be extracted from the ink container and delivered to a printhead. Furthermore, as described below, a very high percentage of a free volume of ink can be extracted from a free ink container, thus limiting the amount of stranded ink.

Ink-container lid **122** includes an outer-face **126** that faces away from the contents of an ink container. Outer-face **126** can be designed to be the "forward" facing portion of an ink container when the ink container is installed in a corresponding ink-container bay. Accordingly, the outer-face may be referred to as a leading surface of the ink container or as being aligned with a leading plane of the ink container. In some embodiments, a portion of a printing-fluid container other than a lid similar to ink-container lid **122** may be the leading surface of the printing-fluid container.

Ink-container lid **122** can be formed with an outer-face **126** that has a substantially planar profile. As described in more detail below, the outer-face may include one or more recesses adapted to provide mechanical alignment and/or keying. The outer-face may additionally or alternatively include holes that pass from the outside of an ink container to the inside of an ink container. Such holes may be used as fluidic interfaces for moving a printing fluid and/or air from inside the ink container to outside the ink container, and vice versa. An entry point of each recess, hole, and/or other interface may be arranged on the same leading surface. In

some embodiments, the entry points to various interfaces of a printing-fluid container may be located on towers that are raised above another portion of the leading surface. Such an embodiment may not have a substantially planar profile, yet the entry point of various mechanical, fluidic, and/or electrical interfaces may be aligned on a common leading plane. In some embodiments, the entry point to each interface may be arranged within an acceptable distance on either side of a leading plane. For example, in some embodiments, any forward or backward variation of an interface's entry point relative to the entry point of another interface may be less than approximately 5 mm, while in most embodiments such variations may be less than approximately 2 mm, or even 1 mm. An ink-container lid that has an outer-face with a substantially planar profile may be referred to as a substantially planar ink-container lid, although such an ink-container lid can have a measurable thickness, an irregular inner-side, and/or one or more surface deviations on its outer-face.

Ink-container lid **122** can be constructed as a unitary structural piece **130**, as opposed to a combination of two or more structural pieces. Such a piece may be molded, extruded, or otherwise formed from a material selected for strength, weight, workability, cost, compatibility with ink, and/or other considerations. For example, the lid may be injection molded from a suitable synthetic material. Construction from a unitary structural piece produces an ink-container lid in which an inner-side and an outer-face are opposite sides of the same piece of material.

An ink-container lid constructed from a unitary structural piece may be fit with complementary auxiliary components. For example, a gasket may be used to promote a fluid-tight seal between the ink-container lid and a reservoir body. A fluidic interface formed in a unitary structural piece may be fit with a seal configured to selectively seal ink within the ink container. The seal may take the form of a septum, a ball and septum assembly, or other mechanism. A memory device may be affixed to ink-container lid **122** and the ink-container lid may be equipped with an electrical interface for transferring data to and from the memory device. Such auxiliary components can be adapted to integrally cooperate with the unitary structural piece that defines the general size and shape of the ink-container lid.

Ink container **120** includes a reservoir body **124** that cooperates with ink-container lid **122** to provide a structural boundary for containing a volume of ink. As described in more detail below, the various mechanical, electrical, and fluidic interfaces of ink container **122** may be arranged on an ink-container lid. In other words, interface functionality of an ink container can be substantially consolidated to an ink-container lid, thus providing design freedom with respect to the reservoir body. For example, FIG. **8** shows ink-container lid **122** with three differently sized reservoir bodies **124***a*–**124***c*. As can be seen, ink containers with different ink capacities can be formed by combining different reservoir bodies with the same ink-container lid. Therefore, an ink container may be selectively sized to provide a desired ink capacity. Furthermore, two or more ink containers having different ink capacities may be alternately installed into the same ink-container bay, thereby providing increased printer configuration flexibility. Standardizing ink-container lid design may also help to reduce manufacturing costs. It should be understood that differently configured ink-container lids are also within the scope of this disclosure.

A portion of an ink-container reservoir body can be configured with a standard size and shape while another portion is configured with a size and shape that varies between two or more configurations. For example, FIG. **8** shows reservoir bodies **124***a*–**124***c* that respectively include shoulder portions **132***a*–**132***c*, which are similarly configured with respect to one another. Such shoulder portions have a width that is substantially the same as a corresponding width of the ink-container lid. Reservoir bodies **124***a*–**124***c* also respectively include rear portions **134***a*–**134***c*, which are differently configured with respect to one another. Such rear portions have a width that is less than a corresponding width of the ink-container lid. The shoulder portions and the rear portions are joined by rim portions **136***a*–**136***c* that include latching surfaces **138***a*–**138***c*. Configuring a portion of a reservoir body, such as shoulder portions **132***a*–**132***c*, with a standard size and shape improves compatibility between different ink containers, similar to the compatibility provided by a standard ink-container lid **122**. For example, different ink containers that have similarly configured shoulder portions, but which may have rear portions of differing sizes, can be secured by the same latching member.

Reservoir body **124** may be configured to serve as a handling portion of an ink container. An ink container may be physically held and manipulated when an ink container is loaded and unloaded from an ink-container bay of an ink-supply station. An ink container may also be held at a gripping portion during a refill process, during maintenance, or during various other situations. Reservoir body **124** may be used to handle the ink container in such instances. The reservoir body may be sized and shaped for comfortable and secure gripping. Furthermore, a surface of the reservoir body may be adapted to enhance gripping traction, such as by texturing the surface. The shape of the reservoir body may also facilitate inserting the printing-fluid container into a corresponding ink-container bay of an ink supply station. For example, the lack of symmetry across a horizontal axis helps define a top and a bottom that a user may easily appreciate, thus simplifying installation of the ink-container into a corresponding ink-container bay.

As mentioned above, an ink-container lid may include one or more interface features corresponding to complementary features of an ink-container bay adapted to receive the ink container. For example, as shown in FIG. **5**, ink-container lid **122** includes an interface package **150** comprising an alignment pocket **152**, a keying pocket **154**, a top fluidic interface in the form of an air-interface **156**, a bottom fluidic interface in the form of an ink-interface **158**, and an electrical interface **160**. Interface package **150** is positioned interior an outer perimeter **128** of ink-container lid **122**. In other words, the constituent features of interface package **150** are not positioned around a lateral edge of the ink-container lid, or elsewhere on the reservoir body.

As described in more detail below, interface package **150** is an exemplary collection of mechanical, fluidic, and electrical interfaces adapted to enable and/or enhance ink delivery from the ink container. Interface package **150** is provided as a nonlimiting example, and other arrangements may include additional and/or alternative features. Furthermore, the positioning of the various features may vary from the illustrated embodiment.

FIG. **5** shows an exemplary alignment pocket **152** configured to position an ink container in a desired location with a desired orientation. Such positioning facilitates the mating of an ink container with an ink-container bay. In particular, an alignment pocket may be used to position an ink container in the proper position so that various aspects of the ink container align for coupling with corresponding aspects of

an ink-container bay. For example, keying pocket **154** can be aligned with a corresponding key post of the ink-container bay. Air-interface **156** and ink-interface **158** can be aligned with corresponding air and ink connectors of the ink-container bay. Electrical interface **160** can be aligned with a corresponding electrical contact of the ink-container bay.

Alignment pocket **152** may be recessed from a leading surface of the printing-fluid container, thus providing a robust interface that is less prone to damage compared to a tower interface protruding from the leading surface of the printing-fluid container. In some embodiments, the alignment pocket may recess from a leading surface by 10 millimeters, 15 millimeters, or more. The cross-sectional width of the alignment pocket may be selected to achieve a desired ratio of length to width. In particular, a length/width ratio of approximately 1.5 has been found to limit rotation of a printing-fluid container when mated with a corresponding alignment member. Ratios ranging between 1.0 and 4.0 may be suitable in some embodiments, with ratios between 1.2 and 2.0 being appropriate in most circumstances. The width of the alignment pocket may be selected to be large enough to accommodate alignment members that are mechanically strong enough to resist twisting forces that could result in rotation of the printing-fluid container and misalignment of various interface features.

FIGS. **9**–**11** and **14**–**16** show a series of cross-section views in which ink container **120** is being seated into an ink-container bay **170**. FIGS. **9**–**11** are top views showing ink container **120** moving from an unseated position to a seated position. Similarly, FIGS. **14**–**16** are side views showing ink container **120** moving from an unseated position to a seated position. Ink-container lid **122** includes an alignment pocket **152** recessed from a center portion of the ink-container lid. In the illustrated embodiment, alignment pocket **152** includes a terminal surface **172** and sidewalls **174** that recess from a generally planar outer-face, or leading surface. The alignment pocket can be sized so that it is deep enough to accommodate a corresponding outwardly projecting alignment member **176** of ink-container bay **170**. Sidewalls **174** may be arranged perpendicular to the outer-face or one or more of the sidewalls may be tapered so that a cross-section area of an opening **178** of alignment pocket **152** is greater than a cross-section area of terminal surface **172**.

A fit between alignment member **176** and alignment pocket **152** can be sufficiently tight so that when the alignment pocket engages the alignment member, ink-container lid **122** is effectively restricted to a desired movement path. In this manner, alignment of the ink-container lid and a corresponding ink-container bay can be ensured. The fit can be established by physical contact between portions of alignment pocket **152** and alignment member **176**. Such contact may be along entire surfaces of the alignment pocket and the alignment member, as shown in the drawings. In some embodiments, contact may occur along less than entire surface portions. In some embodiments, mating of an alignment member with the alignment pocket may be less tight, and the alignment pocket may merely be sized to accommodate a projecting alignment member without tightly engaging the alignment member.

Ink-container lid **122** may include a progressive alignment mechanism, in which alignment of the ink-container lid becomes more precise as the ink-container lid is more completely seated in an ink-container bay. For example, outer perimeter **128** may be sized slightly smaller than corresponding sidewalls **180** of ink-container bay **170**, and the ink-container bay may be configured to engage the ink-container lid before the alignment pocket tightly engages the alignment member. Therefore, the outer-perimeter can provide a course alignment for the ink-container lid. The fit between the ink container and sidewalls **180** can be relatively tolerant so that it is easy to initiate the course alignment. Although the course alignment may be less precise than the alignment provided by alignment pocket **172**, the ink container can be in a greater range of positions when the course alignment is initiated compared to when fine alignment is initiated. The ink container and ink-container bay may be configured so that alignment pocket **152** is directed to a position to engage alignment member **176** by the course alignment interaction between outer-perimeter **128**, shoulder portion **132**, and sidewalls **180**. In some embodiments, course alignment may not include an actual physical interaction, but rather a visual cue for placing an ink container into a coarsely aligned position.

Alignment member **176** and alignment pocket **152** may be complementarily configured so that a fit between the alignment member and the alignment pocket progressively tightens as the ink-container lid is seated in the ink-container bay. For example, some embodiments of an alignment pocket may be configured with a cross-section area of opening **178** that is greater than a cross-section area of terminal surface **172**. Furthermore, alignment member **176** can be configured with an end **182** that has a cross-section area that corresponds with the cross-section area of terminal surface **172**. Therefore, end **182** may somewhat loosely fit into opening **178**, yet tightly fit when fully seated towards terminal surface **172**. As the alignment member and the alignment pocket are more completely mated with one another, the fit between the alignment pocket and the alignment member may progressively tighten. In some embodiments, an end of an alignment member may include a slight taper or round over that facilitates initiating alignment contact with an alignment pocket.

A progressive alignment system can be used to ensure that aspects of ink-container lid **122** are properly aligned with corresponding features of ink-container bay **170**. In other words, the fit between the alignment pocket and the alignment member may be designed to achieve a desired level of tightness before an aspect of the interface package (e.g. ink-interface, air-interface, keying pocket, electrical interface, etc.) engages a corresponding aspect of an ink-container bay. Progressive alignment may also facilitate initiation of alignment because there is a greater tolerance in ink container positioning at the beginning of seating compared to when the ink container is fully seated into the ink-container bay. Once alignment is initiated, the ink container may be effectively directed into a desired location with a desired orientation with increasing precision. Interaction between aspects of the ink container with aspects of the ink-container bay can be designed to initiate when the desired level of precision has been achieved. The progressive alignment system described above is provided as a nonlimiting example. Other progressive alignment systems may be used. Furthermore, some embodiments may utilize nonprogressive alignment systems.

FIG. **5** shows an exemplary keying pocket **154** configured to ensure that an ink container is seated in a proper ink-container bay. Each bay of an ink supply station may be adapted to receive an ink container holding a particular printing fluid (type of ink, color of ink, fixer, preconditioner, etc.). For example, each ink-container bay may include a key post of unique shape and/or orientation corresponding to the color of ink that that ink-container bay is adapted to receive. Similarly, an ink container holding that color of ink can

include a keying pocket that restrictively mates with a corresponding key post associated with that color. A key post may mate with a keying pocket in a mutually exclusive relationship, meaning that a key post associated with one color of ink would not mate with a keying pocket associated with a different color of ink, or another type of printing fluid. In other words, each color of ink may be keyed by a uniquely configured key post and keying pocket combination. In this manner, a characteristic of the keying pocket of a printing-fluid container may designate the printing fluid held by the container.

A keying pocket can be used to provide physical validation that a fluid container is being inserted into the proper fluid-container bay. For example, a keying pocket may provide tactile feedback during an attempt to load an ink container into an ink-container bay. The keying pocket and/or key post may be configured so that the tactile feedback may be distinctly different depending on whether the ink container is being loaded in a bay set up to deliver the color of ink that the ink container is holding or a different color of ink. A keying pocket can be adapted to prohibit ink containers from being loaded into ink-container bays that do not include a key post corresponding to the keying pocket of the ink-container lid. In some embodiments, such an ink container may be loaded, however the interaction between the non complementary key post and keying pocket can generate a feel that is distinctly different than the feel of complementary keying features engaging one another. For example, there may be more resistance when inserting an ink container that includes a keying pocket that is not complementarily configured relative to the key post engaging the keying pocket.

FIGS. **9**–**11** show a cross-section view of keying pocket **154** receiving a key post **190** as ink container **120** is being seated into ink-container bay **170**. Keying pocket **154** and key post **190** are complementarily configured based on a corresponding color of ink. A keying pocket, such as keying pocket **154**, can be configured to mate with only key posts corresponding to the correct color of ink. Other ink containers may include similar keying pockets adapted to mate with different key posts associated with different colors of inks. In this manner, each color of ink a printing system is configured to deliver may be associated with a unique combination of a key post and corresponding keying pocket. Though primarily described with reference to keying a particular color of ink, it should be understood that a keying mechanism may be used to key alternative or additional aspects of printing fluids. For example, a particular type of ink, such as photo-ink, may be uniquely keyed to ensure that the proper type of ink is installed in a particular bay. Furthermore, other printing fluids, such as preconditioners and/or fixers, may be keyed to ensure that a fluid container holding such a fluid is installed into a corresponding bay that is configured to deliver such a fluid.

Alignment member **176** can be configured to engage alignment pocket **152** before key post **190** engages keying pocket **154**. Therefore, the alignment member and the alignment pocket can cooperate to ensure that keying pocket **154** is properly positioned for engagement with key post **190**. The alignment member may be longer than the key post in order to facilitate mating of the alignment member and the alignment pocket before mating of the key post and the keying pocket. In such embodiments, the alignment pocket may be deeper than the keying pocket. In some embodiments, the keying pocket and the alignment pocket may be configured to respectively engage a key post and an alignment member at substantially the same time. In some embodiments, the functionality of an alignment pocket and a keying pocket may be incorporated into a single feature configured to position an ink container in a desired location with a desired orientation and ensure that the ink container is seated in a proper ink-container bay.

FIG. **12** schematically shows a cross-section view of exemplary key post **190**, which is configured for insertion into complementarily configured keying pocket **154**. In the illustrated embodiment, key post **190** has a "Y" configuration that includes a first spoke **192**, a second spoke **194**, and a third spoke **196**. An angle α between first spoke **192** and second spoke **194** is the same as an angle α between first spoke **192** and third spoke **196**. An angle θ between second spoke **194** and third spoke **196** is less than angle α. The key post may be described as being symmetrical about a symmetry axis S, which runs through first spoke **192** and bisects angle θ. As illustrated, key post **190** is not symmetrical about any other axis that is coplanar with symmetry axis S.

Keying pocket **154** is shaped to mate with key post **190**, so that each spoke effectively slides into a corresponding slot of the keying pocket. Unique keying interfaces may be based on the same general shape of a particular key post and keying pocket combination, but by rotating the orientation of the combination. For example, a different interface may be configured by rotating a symmetry angle of a key post that has the same general shape as key post **190**. A corresponding keying pocket could be similarly rotated to produce a unique interface combination. For example, a symmetry angle can be rotated in 45° increments to yield **8** unique key post configurations. FIG. **13** shows five such configurations that may be used to key five colors of ink different than the color of ink keyed by key post **190**. The above described key post and keying pocket configurations are provided as a nonlimiting example. Other keying interfaces may be used.

A keying interface may additionally and/or alternatively be varied relative to another keying interface by moving the relative position of the keying interface on an ink container and an associated ink-container bay. For example, using the example described above, in which a key post can be rotated in 45° increments to yield 8 different possible key post configurations; a location of the key post may be selected between 3 different locations to yield a total of 24 (8×3) unique key post configurations. Keying pockets with corresponding locations and orientations may be configured to mate with such key posts. If desired, additional keying configurations may be achieved by decreasing the magnitude of rotation increments, adding key post locations, adding new key post shapes, etc. For example, a key post can be rotated in 22.5° increments to yield 16 different configurations. Similarly, different key post and key pocket shapes can be used, examples of which include "T," "L," and "V" shapes.

As described above, a keying feature and/or alignment feature of an ink container may be configured as a recess that extends into the ink container as opposed to a protuberance that extends outward from the ink container. Such a recess provides a robust interface that is resistant to damage. Furthermore, configuring an ink container with a recess does not disrupt the generally planar profile of the outer-face of an ink-container lid.

FIG. **5** shows exemplary top fluidic interface **156** and exemplary bottom fluidic interface **158**, which are configured to transfer ink, air, or an ink-air mixture to and/or from ink container **120**. As used herein, top fluidic interface **156** may be referred to as an air-interface and bottom fluidic

interface **158** may be referred to as an ink-interface. However, it should be understood that both interfaces may, in some embodiments and/or modes of operation, transfer ink, air, or a mixture thereof. In one exemplary mode of operation, bottom fluidic interface **158** may deliver a printing fluid, while top fluidic interface **156** controls pressure within the printing fluid container.

In the illustrated embodiment, the fluidic interfaces are configured as septa having a ball seal design. The fluidic interfaces are adapted to seal the contents of the ink container so that the contents do not undesirably leak. Each interface is configured to releasably receive a fluid connector, such as a hollow needle, that can penetrate the selective seal of a septum and transfer fluid into and out of the ink container. The septum can be configured to prevent undesired leaking when a fluid connector is inserted and after a fluid connector has been removed. For example, the septum may closely engulf an inserted needle, so that ink or air can pass through the needle, but not between the needle and the septum.

FIGS. **14**–**16** show fluid connector **200** engaging air-interface **156** and fluid connector **202** engaging ink-interface **158**. Alignment member **176** can be configured to engage alignment pocket **152** before the fluid connectors engage the fluidic interfaces. Therefore, the alignment member and the alignment pocket can cooperate to ensure that the fluidic interfaces are properly positioned for engagement with the fluid connectors. In other words, the alignment interface prevents the fluid connectors from engaging an undesired portion of the ink container, which could cause damage to the fluid connectors. Entry points to the fluidic interfaces can be positioned substantially coplanar with a leading plane of the ink container, as opposed to on alignment posts that extend from an outer-face of the ink container, because the alignment pocket and the alignment member cooperate to properly align the fluidic interfaces.

FIGS. **17**–**19** show a more detailed view of a sealing member **260** of fluid interface **158**. Sealing member **260** includes a ball sealing portion **262** that is shaped to mate with a yieldably biased plug member to form a fluid tight seal that prevents undesired fluid leakage when the fluid interface is not engaged by a corresponding fluid connector (FIG. **18**). Sealing portion **260** also includes a needle sealing portion **264** that prevents undesired fluid leakage when the fluid interface is engaged by a corresponding fluid connector (FIG. **19**). As shown in FIG. **18**, a spring member **266** biases a plug member **268** against ball sealing portion **262** of the sealing member. Sealing portion **262** is complementarily shaped relative to the plug member so that when the plug member is pressed against the sealing portion a fluid tight seal is established. As shown in FIG. **19**, a fluid connector **202** may be inserted through sealing member **260**, and the fluid connector may move the plug member away from the sealing member against a restorative force applied by the spring member. When the plug member is moved away from the sealing member, the fluid tight seal between the sealing member and the plug member is relaxed. However, a fluid tight seal between the fluid connector and the sealing member may be established. As shown in FIG. **20**, fluid connector **202** may include an end portion **272** that has fluid passage features **274** that permit the flow of fluid into a hollow portion **276** of the fluid connector when the fluid connector engages the plug member. The above is provided as a nonlimiting example of a possible configuration for a fluid interface and a corresponding fluid connector. It should be understood that other mechanisms may be used to selectively seal fluid in a fluid container while remaining within the scope of this disclosure. As one example, a slit septum that self seals when a needle is removed may be used.

As shown in FIGS. **14**–**16**, ink-interface **158** can be positioned near a gravitational bottom of an ink container that is orientated in a seated position in a corresponding ink-container bay. In such a position, fluid connector **202** is also near a gravitational bottom of the ink container. Furthermore, an ink-container reservoir body **124** can be shaped with a bottom surface **204** that slopes towards the fluid connector so that ink can naturally flow to the fluid connector. In other words, bottom surface **204** is gravitationally biased toward a low portion of the ink container. In the illustrated embodiment, the shape of the ink container produces an ink well **206** configured to allow ink to drain into position for access by fluid connector **202**. By virtue of the position of the ink well relative to the remainder of the reservoir, printing fluid may accumulate in the ink well as the level of ink lowers. Fluid connector **202** can continue to draw ink occupying ink well **206** as the ink level lowers during use.

The well, ink-interface, and corresponding fluid connector may be positioned to limit the amount of ink that is stranded in the ink container, thereby minimizing waste. In some embodiments, a printing fluid container may deliver all but at most 2 cubic centimeters of printing fluid, with all but at most 1 cubic centimeter being delivered in most embodiments. As mentioned above, the size of the reservoir body may be increased, thus providing an increased ink capacity. However, such reservoirs may be configured with an ink well similar to ink well **206**, or otherwise be configured so that an ink-interface is near the bottom of the reservoir, thus minimizing the amount of ink that can be stranded within the ink container. In other words, according to this disclosure, the amount of ink that may be stranded inside of an ink container does not have to be proportional to the ink capacity of the ink container.

As shown in FIG. **5**, outer-face **126** of ink-container lid **122** may include a protrusion **210** at which ink-interface **158** is located. In the illustrated embodiment, protrusion **210** is configured to allow a center portion of ink-interface **158**, through which a fluid connector may pass, to be positioned near a low point of the ink-container reservoir. Therefore, a fluid connector may be inserted into the fluidic interface to draw ink from a relatively low area of the ink container, thus facilitating the extraction of a greater percentage of ink from the ink container protrusion **210** also allows the ink-interface to be located near the bottom of the ink reservoir while remaining interior outer perimeter **128** of outer-face **126**.

FIG. **21** somewhat schematically illustrates a protrusion **210**, which aligns with a trough **212** that is recessed from a portion of bottom surface **204**, thus forming a well **206**. Well **206** may be gravitationally lower than the remainder of the reservoir, thus facilitating the accumulation of printing fluids in the well as printing fluids are removed from the container. In other words, a well portion **207** of the bottom surface may be recessed from a remainder of the bottom surface. To enhance the accumulation of printing fluids in well **206**, bottom surface **204** may be gravitationally biased toward the well, so that printing fluids may effectively flow "downhill" to the well. Bottom surface **204** may be shaped without any false wells, which could accumulate trapped printing fluid without a fluid path to well **206**.

Protrusion **210** and trough **212** may be substantially aligned with one another, as illustrated in the depicted embodiment. When so aligned, an outline of the downward edge of the leading surface traces an outline of the down-

ward edge of the bottom surface protrusion **210** and trough **212** may be horizontally aligned relative to ink-container lid **122**. The protrusion and trough may additionally or alternatively be horizontally aligned relative to an insertion axis of the ink-container bay. In other words, the protrusion may be positioned on the ink-container lid so that when the ink container is installed into a corresponding ink-container bay, the protrusion, and/or a fluid interface on the protrusion, is positioned substantially equidistant from either side of the ink-container bay.

In FIG. **21**, a fluid level **214** is schematically illustrated and shows how much ink may be drawn from the printing-fluid container when the container includes a well. In contrast, FIG. **22** schematically illustrates a fluid level **216** of a container that does not include a well. As can be appreciated by comparison, well **206** limits the amount of stranded printing fluid. While the depth of fluid level **214** and fluid level **216** may be comparable, the volume of printing fluid associated with fluid level **214** is considerably less than the volume of printing fluid associated with fluid level **216**. Well **206** may be configured so that the cross-sectional area of the portion of a fluid container that bounds fluid level **214** is less than the cross-sectional area of the portion of a fluid container that bounds fluid level **216**, thus decreasing the respective volumes assuming similar depths. In some embodiments, well **206** may be configured to reduce the top surface area (and corresponding volume) of a fluid level that corresponds to an effectively empty fluid container by at least 75%, and usually by 90% or more. Furthermore, as mentioned above, the capacity of the remainder of an ink container may be increased without changing the size of the well and without generating an increase in the amount of printing fluid that will be stranded in the container. Well **206** may be variously sized and shaped. As a general rule, the volume of well **206** may be decreased to lessen the amount of printing fluid that may be stranded within the container. Well **206** may be sized to accommodate a fluid interface with enough additional volume to allow the free flow of printing fluid into the well.

Air-interface **156** may be positioned gravitationally above ink-interface **158** when an ink container is orientated in a seated position in a corresponding ink-container bay. Top fluidic interface **156** may function as a venting port configured to facilitate pressure equalization in the ink container. When ink is drawn from ink-interface **158**, air-interface **156** may allow air to enter the ink-container reservoir to equalize the pressure therein. Similarly, if ink is returned to the ink container, the air-interface may vent air out of the ink container. As mentioned above, the top fluidic interface may be fluidically coupled to a vent chamber **90** configured to reduce ink evaporation and/or other ink loss. As described and illustrated herein, an ink container (and a corresponding ink-container bay or other mechanism for seating an ink container) may be configured for lateral installation. A configuration which facilitates lateral installation also provides design flexibility in a printing system. In particular, a lateral installation allows a printing system to be designed for front, back, or side loading of an ink container, as opposed to being restricted to top loading.

As illustrated in FIG. **2**, an ink-interface may be an active interface, which is fluidically coupled to a pump **74** that is configured to control the delivery of ink to and from the ink container. An air-interface may be a passive interface, which is not directly controlled by a pump, but rather is configured to allow a pressure balance to be naturally achieved. It should be understood that the illustrated embodiment is provided as a nonlimiting example, and that other configurations are within the scope of this disclosure. For example, in some embodiments, an air-interface may be an active interface that is actively controlled to produce a desired pressure within the ink container.

FIG. **5** shows an electrical interface **160** that is configured to provide a communication and/or power path for one or more electrical devices of ink container **120**. Electrical interface **160** may include one or more electrical contacts **162** that are adapted to electrically link with corresponding electrical contacts of an ink-container bay. When the ink container is seated in the ink-container bay, electric current may travel across the electrical linkage. In this manner, information and/or power may be conveyed across the linkage. For example, an ink container may include a memory device **164**, and the electrical interface may be used to write data to the memory device and/or read data from the memory device. For example, a memory may be configured to store electronic keying information that can be used to validate that an ink container is loaded into an ink-container bay configured to deliver the proper printing fluid. If a mistake is detected, electronic keying may be used to disable printing to avoid contaminating the ink delivery system. The memory may also include an expiration date and/or information regarding the relative amount of ink remaining in the associated ink container. In some embodiments, an electrical interface may include additional or alternative componentry, such as an application specific integrated circuit.

Alignment pocket **152** may be positioned approximately at a center of outer-face **126**, and the other interfaces of interface package **150** may be arranged around the alignment pocket. In this manner, air-interface **156**, ink-interface **158**, electrical interface **160**, and keying pocket **154** may be positioned between the alignment pocket and outer perimeter **128**. As used herein, the term "center" refers to a position relatively distal the outer perimeter of the outer-face of the ink container. The center of an outer-face of an ink container may vary depending on the size and shape of the ink container.

Positioning the alignment pocket near the center of the outer-face allows each of the other interfaces to be located relatively near the alignment pocket.positioning alignment pocket **152** proximate the other interfaces may facilitate aligning those interfaces with corresponding features of an ink-container bay. For example, positioning the interfaces proximate the alignment pocket may decrease the effect of any tolerance that exists in the alignment interface. Therefore, if the alignment interface permits some variation in the alignment, the other interfaces may remain within an acceptable position for engaging corresponding portions of an ink-container bay. In other words, the effects of any movement allowed by the alignment interface may be amplified in proportion to the relative distance from the alignment pocket. Therefore, such effects may be minimized by positioning the various interface features proximate the alignment pocket.

As illustrated in FIG. **5**, fluidic interfaces of an ink container may be located along a vertical axis V of the front surface of the printing-fluid container. Alignment pocket **152** may also be located along vertical axis V, so that vertical axis V intersects top fluidic interface **156**, bottom fluidic interface **158**, and alignment pocket **152**. Similarly, electrical interface **160** and/or keying pocket **154** may be located along a horizontal axis H of the front surface of the printing-fluid container. Alignment pocket **152** may also be located along horizontal axis H, so that horizontal axis H intersects the electrical interface, the keying pocket, and the alignment pocket. In other words, the alignment package may be

arranged in a "cross" configuration with the alignment pocket located at the center of the cross (the intersection of vertical axis V and horizontal axis H). In some embodiments, horizontal axis H may bisect the segment of vertical axis V between top fluidic interface **156** and bottom fluidic interface **158** and/or vertical axis V may bisect the segment of horizontal axis H between electrical interface **160** and keying pocket **154**. Furthermore, as shown in FIG. **5**, vertical axis V may be an axis of symmetry, wherein the basic shape of the fluid-container is the same to the left and right of the axis. As used with relation to an axis and an interface feature, the term "intersect" means that at least a portion of the interface feature is crossed by the axis. Therefore, a common axis may intersect two or more features, although the precise centers of such features are not aligned on the axis.

FIG. **23** shows an exemplary ink container **220** that includes latch slots **222** adapted to provide a latching surface for side-latch members of an ink-container bay. FIGS. **24**–**26** show ink container **220** as it engages ink-container bay **224**. In the illustrated embodiment, ink-container bay **224** includes a side-latch member **226** that is configured to releasably secure the ink container in a seated position in the ink-container bay. The side-latch member may be resiliently movable between at least a closed position and an open position. For example, the side-latch member may be biased in a closed position in which the side-latch member is positioned to contact an ink container when an ink container is seated into the ink-container bay. As the ink container is moved into the ink-container bay the ink container causes the side-latch member to flex into an open position, as shown in FIG. **25**. As shown in FIG. **26**, the side-latch member resiliently returns to a closed position when the ink container is seated in the ink-container bay. Side-latch member **226** includes a catch **228** that engages latch slot **222**, thus holding ink container **220** in a seated position in the ink-container bay. The ink container may be unseated by moving the side-latch member to an open position.

A pair of latch slots located on opposite sides of an ink container may be positioned coplanar with an alignment pocket. For example, latch slots **222** may be positioned on the same plane as alignment pocket **230**. In the illustrated embodiment, the latching surfaces and alignment pocket are each intersected by a common horizontally extending plane. Keying pocket **232** and electrical interface **234** may also be positioned on the same plane. It should be understood that other latching mechanisms may be configured to apply latching pressure along a plane that passes through an alignment pocket. In some embodiments, a latch slot may be positioned on another plane that intersects an alignment pocket, such as on a vertical plane that intersects an alignment pocket and one or more fluidic interfaces.

FIGS. **27**–**29** show another embodiment in which another latching mechanism is employed. As illustrated, an ink-container bay **240** includes an alignment member **242** that in turn includes an inner-latch member **244**. Inner-latch member **244** is configured to selectively engage an alignment pocket **246** when an ink container **248** is seated in the ink-container bay. The inner-latch member may be resiliently movable between at least a closed position and an open position. For example, the inner-latch member may be biased in a closed position in which the inner-latch member is positioned to contact alignment pocket **246** when the ink container is seated into the ink-container bay. As the ink container is moved into the ink-container bay the ink container causes the inner-latch member to flex into an open position, as shown in FIG. **28**. As shown in FIG. **29**, the inner-latch member resiliently returns to a closed position when the ink container is seated in the ink-container bay. Inner-latch member **244** includes a catch **250** that engages a corresponding latching tab **252** of alignment pocket **246**, thus holding ink container **248** in a seated position in the ink-container bay. The ink container may be unseated by moving the inner-latch to an open position.

The above described side-latch and inner-latch mechanisms are provided as nonlimiting examples of possible latching configurations. A side-latch mechanism and an inner-latch mechanism may be used cooperatively or independently of one another. Similarly, a side-latch mechanism and/or an inner-latch mechanism may additionally or alternatively be used with respect to other latching mechanisms, such as the latching mechanism described with reference to FIGS. **3** and **4**. Other suitable latching mechanisms may also be used.

As described above with reference to the illustrated embodiments, an ink container may include an interface package with one or more fluidic, mechanical, and/or electrical interfaces. The ink container may be described as having a leading surface, which is configured to be laterally inserted into an ink-container bay of an ink supply station. The leading surface of an ink container may be configured as a substantially planar outer-surface. Each of the respective interfaces of the interface package may be located on the substantially planar leading surface of the ink container. The leading surface may be described as having an outer perimeter, and the respective interfaces of the interface package may be located interior the outer perimeter. The illustrated embodiments show a nonlimiting example of a configuration for arranging an interface package. It should be understood that other arrangements are within the scope of this disclosure.

Although the present disclosure has been provided with reference to the foregoing operational principles and embodiments, it will be apparent to those skilled in the art that various changes in form and detail may be made without departing from the spirit and scope defined in the appended claims. The present disclosure is intended to embrace all such alternatives, modifications and variances. Where the disclosure or claims recite "a,""a first," or "another" element, or the equivalent thereof, they should be interpreted to include one or more such elements, neither requiring nor excluding two or more such elements.

What is claimed is:

1. A printing-fluid container configured for lateral insertion into a printing-fluid container bay having a latching member, the printing fluid container comprising:

a leading surface; and

an alignment pocket recessed into a center portion of the leading surface, wherein the alignment pocket is configured to mate with an outwardly-extending alignment member of the printing-fluid container bay so as to guide the printing-fluid container into an operational position; and

a latching surface configured to be selectively engaged by the latching member of the printing-fluid container bay, and wherein the latching surface and the alignment pocket intersect a horizontally extending plane.

2. The printing-fluid container of claim **1**, wherein the latching surface is located on a rim portion of the printing-fluid container.

3. The printing-fluid container of claim **1**, wherein the latching surface faces opposite the leading surface.

4. The printing-fluid container of claim **1**, further comprising an air-interface and an ink-interface, wherein a common vertical axis intersects the air- interface and the ink-interface.

5. The printing-fluid container of claim 4, wherein the alignment pocket is positioned on the vertical axis intermediate the ink-interface and the air-interface.

6. The printing-fluid container of claim 4, wherein the alignment pocket is positioned on the vertical axis above the ink-interface and below the air-interface.

7. The printing-fluid container of claim 6, further comprising an electrical interface, wherein a common horizontal axis intersects the electrical interface, and wherein the horizontal axis intersects the vertical axis at the alignment pocket.

8. The printing-fluid container of claim 6, further comprising a keying pocket, wherein a common horizontal axis intersects the keying pocket, and wherein the horizontal axis intersects the vertical axis at the alignment pocket.

9. The printing-fluid container of claim 6, further comprising an electrical interface and a keying pocket, wherein a common horizontal axis intersects the electrical interface and the keying pocket, and wherein the horizontal axis intersects the vertical axis at the alignment pocket.

10. The printing-fluid container of claim 9, wherein the horizontal axis is normal to the vertical axis.

11. The printing-fluid container of claim 4, wherein the alignment pocket is positioned substantially equidistant from the air-interface and the ink-interface.

12. The printing-fluid container of claim 4, wherein the vertical axis bisects the leading surface.

13. The printing-fluid container of claim 1, wherein the alignment pocket includes tapered sidewalls.

14. The printing-fluid container of claim 1, wherein the alignment pocket recesses substantially normal to leading surface.

15. The printing-fluid container of claim 1, wherein the alignment pocket recesses has at least 15 millimeters from the leading surface.

16. The printing-fluid container of claim 1, wherein the alignment pocket has a substantially rectangular opening.

17. The printing-fluid container of claim 1, wherein a depth of the alignment pocket is at least approximately 1.5 times a width of an opening of the alignment pocket.

18. A printing-fluid container configured for lateral insertion into a printing-fluid container bay, the printing fluid container comprising:

a leading surface; and

an alignment pocket recessed into a center portion of the leading surface, wherein the alignment pocket is configured to mate with an outwardly-extending alignment member of the printing-fluid container bay so as to guide the printing-fluid container into an operational position;

an air-interface on the leading surface above the alignment pocket;

an ink-interface on the leading surface below the alignment pocket, wherein a vertical axis intersects the air-interface, the ink-interface, and the alignment pocket; and

a keying pocket recessed into the leading surface, wherein a horizontal axis intersects the keying pocket and the alignment pocket, and wherein the horizontal axis intersects the vertical axis at the alignment pocket.

19. The printing-fluid container of claim 18, wherein the alignment pocket is configured to mate with the outwardly-extending alignment.

20. The printing-fluid container of claim 18, wherein the alignment pocket is configured to guide the printing-fluid container into an operational orientation in the printing-fluid container bay.

21. The printing-fluid container of claim 18, wherein the alignment pocket includes tapered sidewalls.

22. The printing-fluid container of claim 18, wherein the alignment pocket recesses substantially normal to the leading surface.

23. The printing-fluid container of claim 18, wherein the alignment pocket recesses at 15 millimeters from the leading surface.

24. The printing-fluid container of claim 18, wherein the alignment pocket has substantially rectangular opening.

25. The printing-fluid container of claim 18, wherein a depth of the alignment pocket is at least 1.5 times a width of an opening of the alignment pocket.

26. A printing-fluid container configured for lateral insertion into a printing-fluid container bay that includes an outwardly-extending alignment member, the printing-fluid container comprising:

a reservoir having a leading portion;

an air-interface positioned on the leading portion of the reservoir;

an ink-interface positioned on the leading portion of the reservoir below the air-interface;

an alignment pocket positioned on the leading portion of the reservoir between the air-interface and the ink-interface, wherein the alignment pocket is configured to mate with the outwardly-extending alignment member; and

a latching surface configured to be selectively engaged by a corresponding latching member of the printing-fluid container bay, wherein a horizontally extending plane intersects the latching surface and the alignment pocket.

27. The printing-fluid container of claim 26, wherein the alignment pocket is positioned substantially equidistant from the air-interface and the ink-interface.

28. The printing-fluid container of claim 26, wherein a common vertical axis intersects the air-interface, the ink-interface, and the alignment pocket.

29. The printing-fluid container of claim 28, wherein the vertical axis bisects the leading portion of the reservoir.

30. The printing-fluid container of claim 28, wherein the vertical axis is an axis of symmetry relative to a shape of the leading portion of the printing-fluid container.

31. The printing-fluid container of claim 28, further comprising a keying pocket positioned on the leading portion of the reservoir, wherein a common horizontal axis intersects the keying pocket and the alignment pocket.

32. The printing-fluid container of claim 28, further comprising an electrical interface positioned on the leading portion of the reservior, wherein a common horizontal axis intersects the electrical interface and the alignment pocket.

33. The printing-fluid container of claim 28, further comprising an electrical interface and a keying pocket, wherein a common horizontal axis intersects the electrical interface and the keying pocket, and wherein the horizontal axis intersects the vertical axis at the alignment pocket.

34. The printing-fluid container of claim 26, wherein the leading portion of the reservoir includes a substantially planar leading surface.

35. A new printing-fluid container configured for lateral insertion into a printing-fluid container bay, the printing fluid container comprising:

a leading surface; and

an alignment pocket recessed into a center portion of the leading surface, wherein the alignment pocket is configured to mate with an outwardly-extending alignment member of the printing-fluid container bay so as to guide the printing-fluid container into an operational position;

an air-interface on the leading surface above the alignment pocket;

an ink-interface on the leading surface below the alignment pocket, wherein a vertical axis intersects the air-interface, the ink-interface, and the alignment pocket; and

an electrical interface, wherein a horizontal axis intersects the electrical interface and the alignment pocket, and wherein the horizontal axis intersects the vertical axis at the alignment pocket.

* * * * *

EXHIBIT C

U 7012254

THE UNITED STATES OF AMERICA

TO ALL TO WHOM THESE PRESENTS SHALL COME:

UNITED STATES DEPARTMENT OF COMMERCE
United States Patent and Trademark Office

May 16, 2006

THIS IS TO CERTIFY THAT ANNEXED HERETO IS A TRUE COPY FROM THE RECORDS OF THIS OFFICE OF:

U.S. PATENT: ***6,089,687***
ISSUE DATE: ***July 18, 2000***

By Authority of the
Under Secretary of Commerce for Intellectual Property
and Director of the United States Patent and Trademark Office

H. L. JACKSON
Certifying Officer

US006089687A

United States Patent [19]

Helterline

[11] **Patent Number: 6,089,687**

[45] **Date of Patent: Jul. 18, 2000**

[54] **METHOD AND APPARATUS FOR SPECIFYING INK VOLUME IN AN INK CONTAINER**

[75] Inventor: **Brian L. Helterline**, Salem, Oreg.

[73] Assignee: **Hewlett-Packard Company**, Palo Alto, Calif.

[21] Appl. No.: **09/037,560**

[22] Filed: **Mar. 9, 1998**

[51] **Int. Cl.**[7] **B41J 2/195**

[52] **U.S. Cl.** **347/7**

[58] **Field of Search** 347/7

[56] **References Cited**

U.S. PATENT DOCUMENTS

4,803,521	2/1989	Honda	355/14 R
4,961,088	10/1990	Gilliland et al.	355/206
5,021,828	6/1991	Yamaguchi et al.	355/209
5,049,898	9/1991	Arthur et al.	346/1.1
5,138,344	8/1992	Ujita	346/140 R
5,184,181	2/1993	Kurando et al.	355/260
5,272,503	12/1993	LeSueur et al.	355/208
5,365,312	11/1994	Hillmann et al.	355/206
5,625,384	4/1997	Numata et al.	347/23
5,682,184	10/1997	Stephany et al.	347/7
5,699,091	12/1997	Bullock et al.	347/19

FOREIGN PATENT DOCUMENTS

0 720 916	7/1996	European Pat. Off.	B41J 2/175
2316657	3/1998	United Kingdom	B41J 2/175
WO9605061	2/1996	WIPO	B41J 2/175

Primary Examiner—Fred L Braun

Attorney, Agent, or Firm—Kevin B. Sulllivan

[57] **ABSTRACT**

An ink-jet printing system that includes a printer portion and a replaceable ink container. The printer portion is for depositing ink on media in response to control signals. The printer portion is configured for receiving a supply of ink. The replaceable ink container is for providing a supply of ink to the printer portion. The replaceable ink container includes an electrical storage device for providing parameters to the printer portion. The electrical storage device includes an ink container scale parameter for selecting an ink container volume range from a plurality of ink container volume ranges. Also included is a fill proportion parameter for specifying a fill proportion for the selected ink volume range. The printer portion determines an ink volume associated with the ink container based on the fill proportion parameter and the selected ink volume range. A method of storing ink container parameters in the electrical storage device includes determining the ink container scale and fill proportion parameters. These parameters are then stored on the electrical storage device.

13 Claims, 5 Drawing Sheets

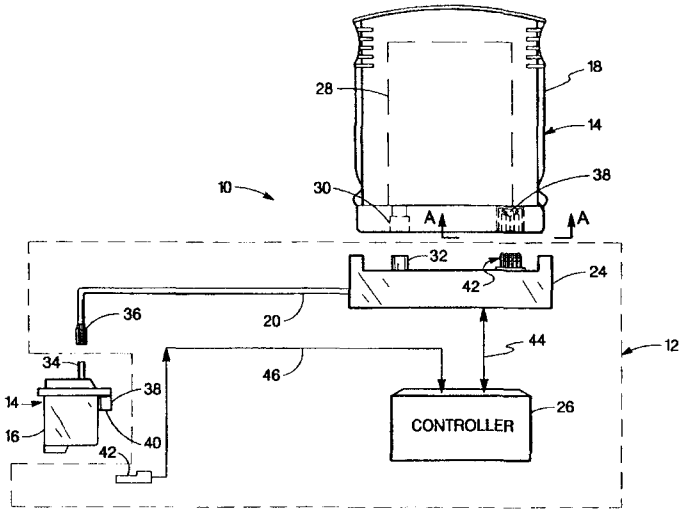

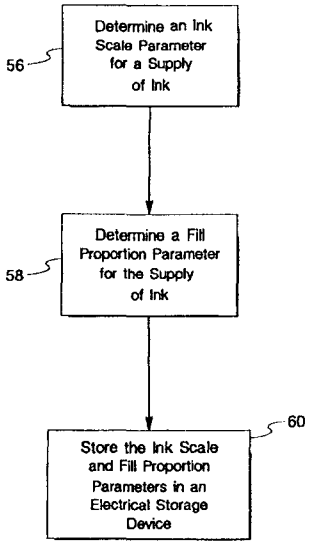

ClibPDF - www.fastio.com

Copy provided by USPTO from the PIRS Image Database on 05/12/2006

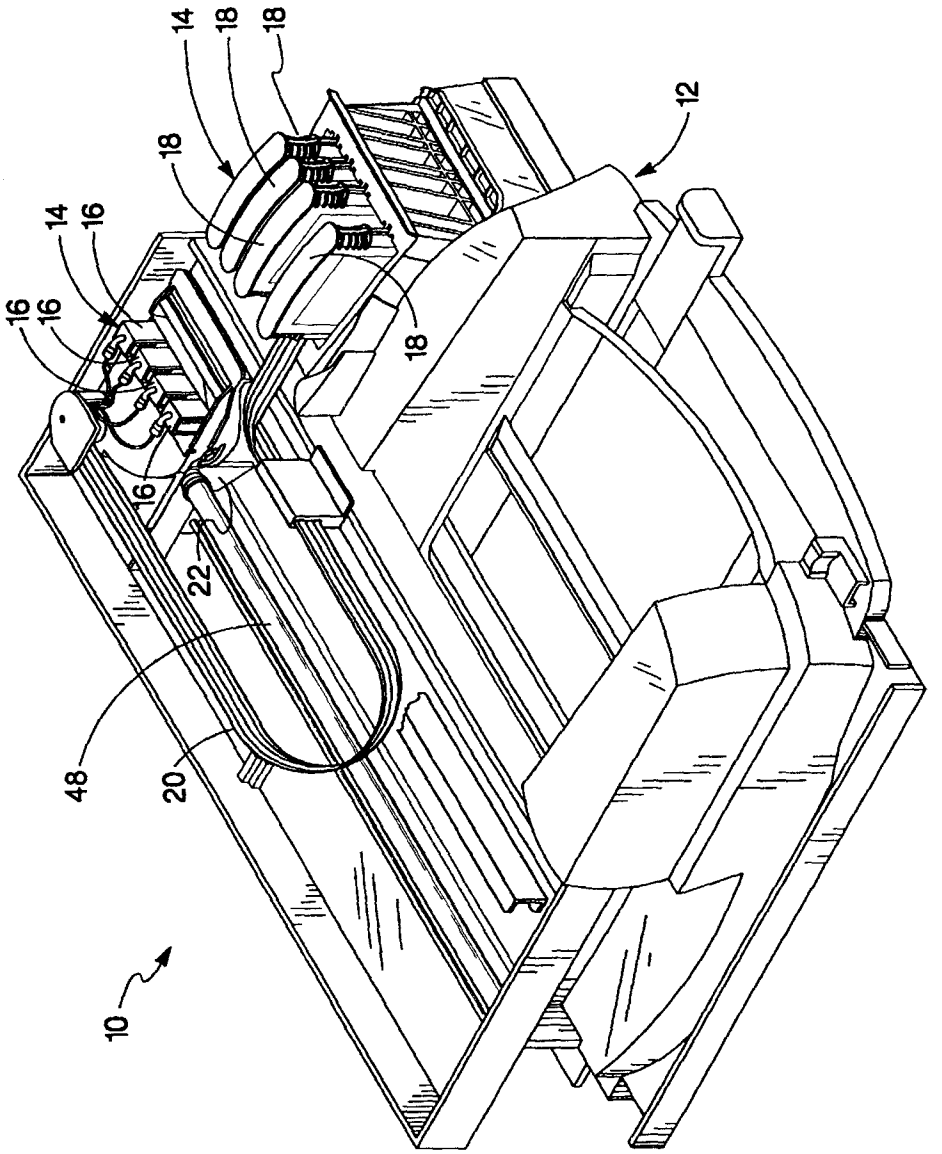

FIG. 1

ClibPDF - www.fastio.com
Copy provided by USPTO from the PIRS Image Database on 05/12/2006

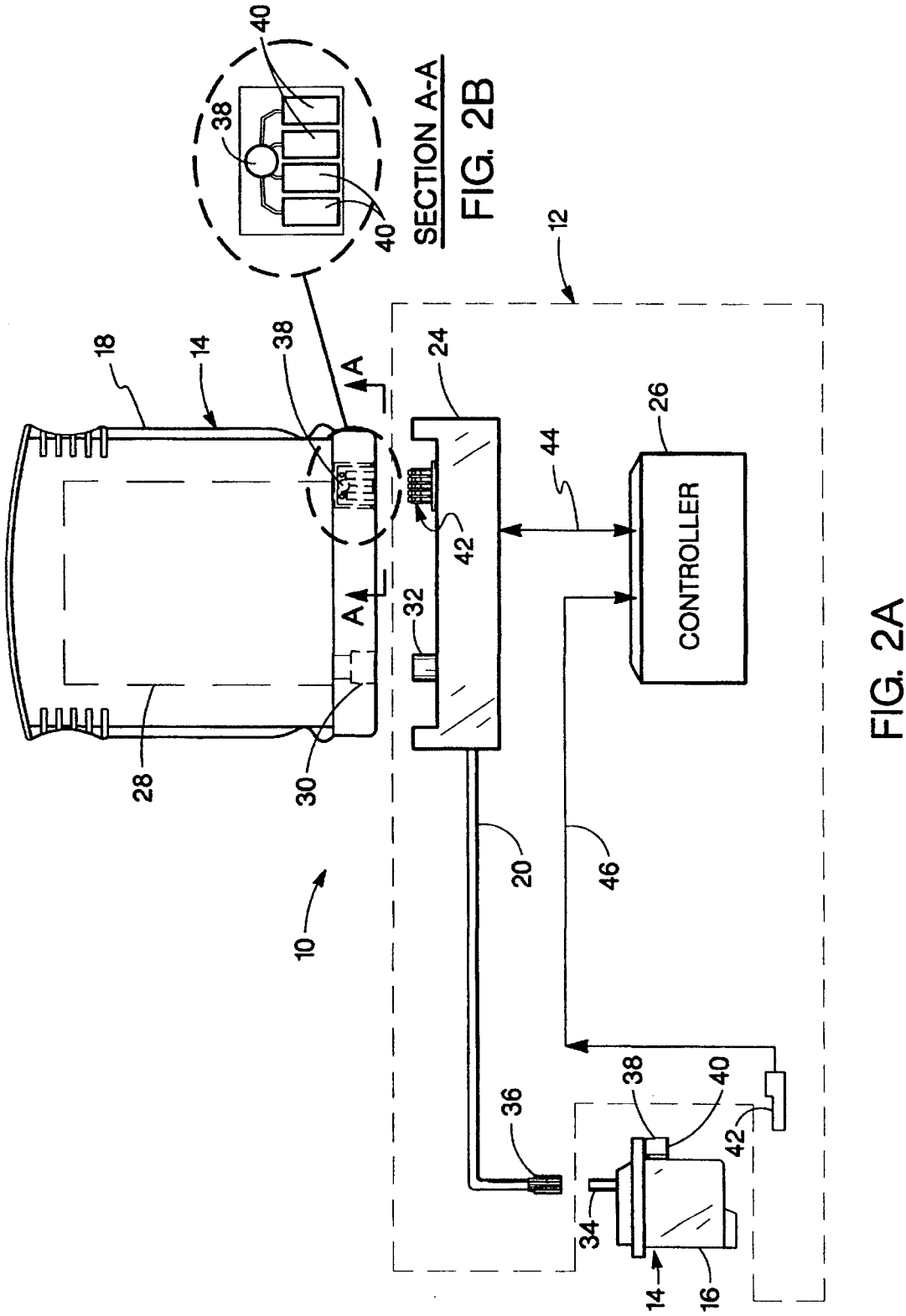

FIG. 2A

ClibPDF - www.fastio.com
Copy provided by USPTO from the PIRS Image Database on 05/12/2006

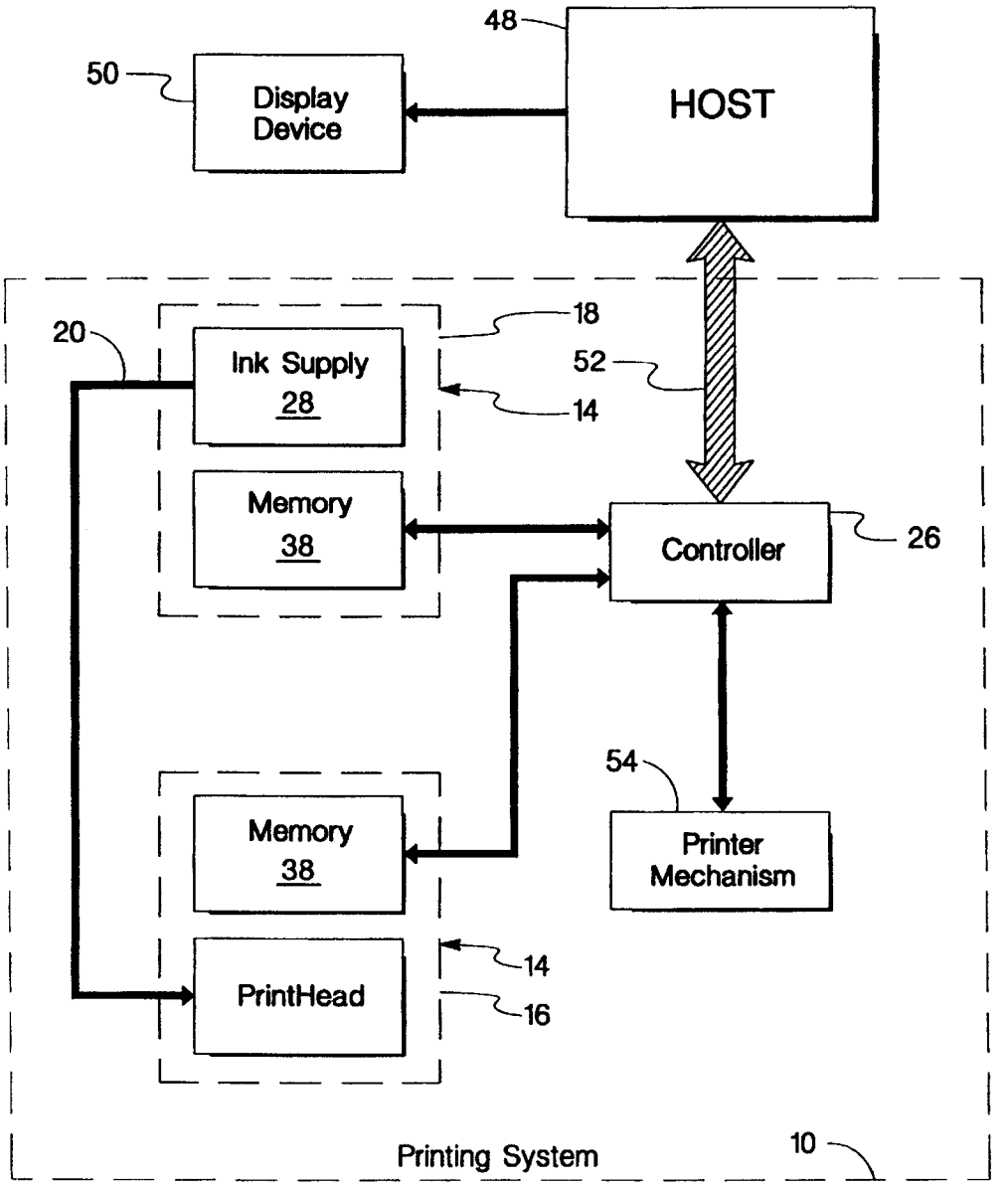

FIG. 3

ClibPDF - www.fastio.com
Copy provided by USPTO from the PIRS Image Database on 05/12/2006

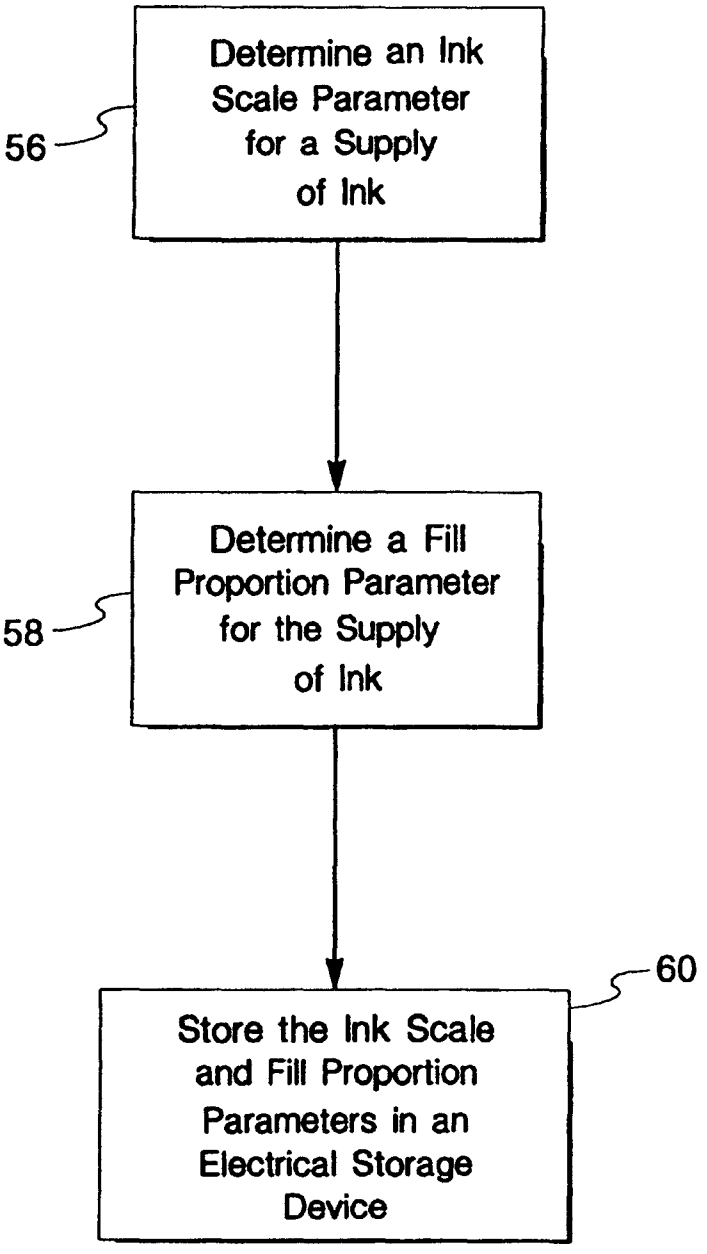

FIG. 4

ClibPDF - www.fastio.com
Copy provided by USPTO from the PIRS Image Database on 05/12/2006

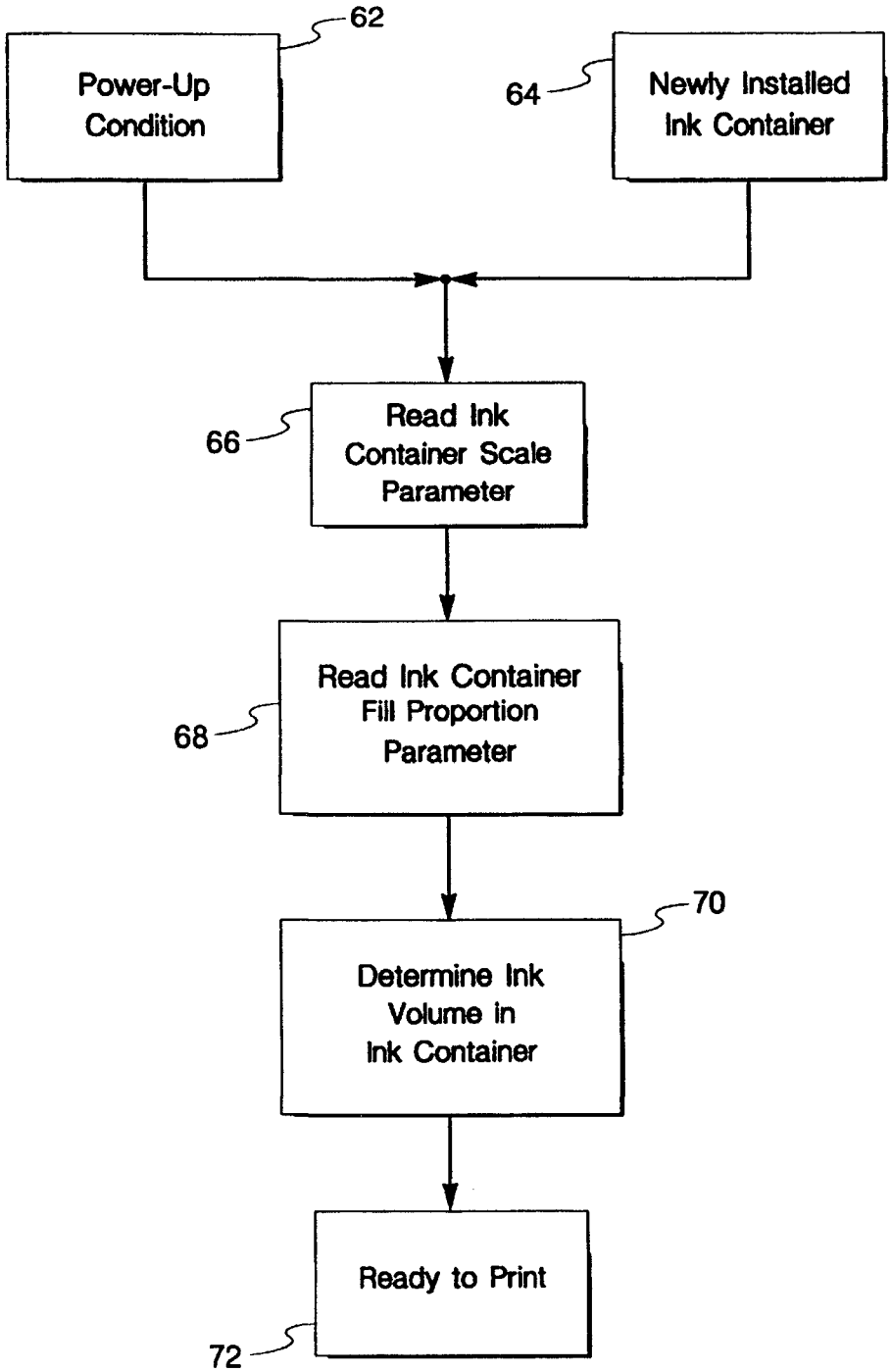

FIG. 5

ClibPDF - www.fastio.com
Copy provided by USPTO from the PIRS Image Database on 05/12/2006

METHOD AND APPARATUS FOR SPECIFYING INK VOLUME IN AN INK CONTAINER

BACKGROUND OF THE INVENTION

The present invention relates to ink-jet printing systems that make use of a replaceable printing component. More particularly, the present invention relates to replaceable printing components that include an electrical storage device for providing information to the ink-jet printing system.

Ink-jet printers frequently make use of an ink-jet printhead mounted within a carriage that is moved back and forth across a print media, such as paper. As the printhead is moved across the print media, a control system activates the printhead to deposit or eject ink droplets onto the print media to form images and text. Ink is provided to the printhead by a supply of ink which is either carried by the carriage or mounted to the printing system to not move with the carriage. For the case where the ink supply is not carried with the carriage, the ink supply can be intermittently or continuously connected to the printhead for replenishing the printhead. In either case, the replaceable printing components, such as the ink container and the printhead, require periodic replacement. The ink supply is replaced when exhausted. The printhead is replaced at the end of printhead life.

It is frequently desirable to alter printer parameters concurrently with the replacement of printer components such as discussed in U.S. patent application Ser. No. 08/584,499 entitled "Replaceable Part With Integral Memory For Usage, Calibration And Other Data" assigned to the assignee of the present invention. Patent application Ser. No. 08/584,499 discloses the use of a memory device, which contains parameters relating to the replaceable part. The installation of the replaceable part allows the printer to access the replaceable part parameters to ensure high print quality. By incorporating the memory device into the replaceable part and storing replaceable part parameters in the memory device within the replaceable component the printing system can determine these parameters upon installation into the printing system. This automatic updating of printer parameters frees the user from having to update printer parameters each time a replaceable component is newly installed. Automatically updating printer parameters with replaceable component parameters ensures high print quality. In addition, this automatic parameter updating tends to ensure the printer is not inadvertently damaged due to improper operation, such as, operating after the supply of ink is exhausted or operation with the wrong or non-compatible printer components.

For the case where the printing system is capable of accommodating a plurality of different ink container sizes it is important that size information is transferred between the printer and the ink container in a highly reliable and efficient manner. This exchange of information should not require the intervention of the user thereby ensuring greater ease of use and greater reliability. Furthermore, it is important that the integrity of the information be preserved.

SUMMARY OF THE INVENTION

One aspect of the present invention is an ink-jet printing system that includes a printer portion and a replaceable ink container. The printer portion is for depositing ink on media in response to control signals. The printer portion is configured for receiving a supply of ink. The replaceable ink container is for providing a supply of ink to the printer portion. The replaceable ink container includes an electrical storage device for providing parameters to the printer portion. The electrical storage device includes an ink container scale parameter for selecting an ink container volume range from a plurality of ink container volume ranges. Also included is a fill proportion parameter for specifying a fill proportion for the selected ink volume range. The printer portion determines an ink volume associated with the ink container based on the fill proportion parameter and the selected ink volume range.

Another aspect of the present invention is method for storing ink container parameters in an electrical storage device. The electrical storage device is associated with an ink container containing a volume of ink. The method includes determining an ink scale parameter associated with an ink volume range for the supply of ink. Also included is determining a fill proportion parameter for the supply of ink. Finally, the method includes storing the ink scale and ink fill parameter in the electrical storage device.

BRIEF DESCRIPTION OF THE DRAWINGS

FIG. **1** depicts a perspective view of an exemplary ink-jet printing system, shown with the cover removed, that incorporates removable printing components of the present invention.

FIGS. **2**A and **2**B depicts a schematic representation of the ink-jet printing system shown in FIG. **1** illustrating a removable ink container and printhead each of which contain an electrical storage device.

FIG. **3** depicts a schematic block diagram of the ink-jet printing system of FIG. **1** shown connected to a host and which includes a removable ink container and printhead each of which contain the electrical storage device.

FIG. **4** depicts a block diagram representation of a method of the present invention for determining an ink volume associated with the removable ink container of the present invention and storing this information in an electrical storage device.

FIG. **5** depicts a block diagram representation of a method of the present invention for determining an ink volume associated with the removable ink container of the present invention.

DETAILED DESCRIPTION OF THE PREFERRED EMBODIMENT

FIG. **1** is a perspective view of one exemplary embodiment of an ink-jet printing system **10** of the present invention shown with its cover removed. The ink-jet printing system **10** includes a printer portion **12** having a plurality of replaceable printing components **14** installed therein. The plurality of replaceable printing components **14** include a plurality of printheads **16** for selectively depositing ink in response to control signals and a plurality of ink containers **18** for providing ink to each of the plurality of printheads **16**. Each of the plurality of printheads **16** is fluidically connected to each of the plurality of ink containers **18** by a plurality of flexible conduits **20**.

Each of the plurality of printheads **16** is mounted in a scanning carriage **22**, which is scanned past a print media (not shown) as the print media is stepped through a print zone. As the plurality of printheads are moved relative to the print media, ink is selectively ejected from a plurality of orifices in each of the plurality of printheads **16** to form images and text.

The ink-jet printing system **10** shown in FIG. **1** is configured to receive ink containers **18** having different ink

ClibPDF - www.fastio.com

Copy provided by USPTO from the PIRS Image Database on 05/12/2006

volumes. This is accomplished using several methods, such as, the use of ink containers **18** that are different sizes with each size having a different volume associated therewith. Another technique for providing different ink volumes is to use ink containers **18** of the same size, but vary a volume of ink in each of the ink containers. It is critical that the ink container **18** provides a volume of ink that matches a proper use model for the particular application. Because ink jet inks typically have a limited storage life once inserted into the printer it is important that the ink container be sized sufficiently large to prevent inconveniencing the user with frequent ink container changes and sufficiently small to prevent ink from becoming stale with age. When ink-jet inks have exceeded the storage life and have become stale these inks cannot reliably produce high quality output images.

One aspect of the present invention is a method and apparatus for storing information on the replaceable printing components **14** for updating operation parameters of the printer portion **12**. An electrical storage device is associated with each of the replaceable printing components **14**. The electrical storage device contains information related to the particular replaceable printer component **14**. Installation of the replaceable printing component **14** into the printer portion **12** allows information to be transferred between the electrical storage device and the printing portion **12** to ensure high print quality as well as to prevent the installation of non-compatible replaceable printing components **14**. The information provided from the replaceable printing component **14** to the printing portion **12** tends to prevent operation of the printing system **10** in a manner which damages the printing system **10** or which reduces the print quality.

Although the printing system **10** shown in FIG. **1** makes use of ink containers **18** which are mounted off of the scanning carriage **22**, the present invention is equally well suited for other types of printing system configurations. One such configuration is one where the replaceable ink containers **18** are mounted on the scanning carriage **22**. Alternatively, the printhead **16** and the ink container **18** may be incorporated into an integrated printing cartridge that is mounted to the scanning carriage **22**. Finally, the printing system **10** may be used in a wide variety of applications such as facsimile machines, postal franking machines and large format type printing systems suitable for use in displays and outdoor signage.

FIGS. **2**A and 2B depict a simplified schematic representation of the ink-jet printing system **10** of the present invention shown in FIG. **1**. FIGS. **2**A and 2B are simplified to illustrate a single printhead **16** and a single ink container **18** for accomplishing the printing of a single color. For the case where more than one color is desired a plurality of printheads **16** are typically used each having an associated ink container **18** as shown in FIG. **1**.

The ink-jet printing system **10** of the present invention includes a printer portion **12** having replaceable printing components **14**. The replaceable printing components **14** include a printhead **16** and an ink container **18**. The printer portion **12** includes an ink container receiving station **24** and a controller **26**. With the ink container **18** properly inserted into the ink container receiving station **24**, an electrical and a fluidic coupling is established between the ink container **18** and the printer portion **12**. The fluidic coupling allows ink stored within the ink container **18** to be provided to the printhead **16**. The electrical coupling allows information to be passed between the ink container **18** and the printer portion **12** to ensure the operation of the printer portion **12** is compatible with the ink contained in the ink container **18** thereby achieving high print quality and reliable operation of the printing system **10**.

The controller **26** controls the transfer of information between the printer portion **12** and the ink container **18**. In addition, the controller **26** controls the transfer of information between the printhead **16** and the controller **26**. Finally, the controller **26** controls the relative movement of the printhead **16** and the print media as well as selectively activating the printhead to deposit ink on print media. The controller **26** is typically implemented with a microprocessor or some form of programmable controller.

The ink container **18** includes a reservoir **28** for storing ink therein. A fluid outlet **30** is provided that it is in fluid communication with the fluid reservoir **28**. The fluid outlet **30** is configured for connection to a complimentary fluid inlet **32** associated with the ink container receiving station **24**.

The printhead **16** includes a fluid inlet **34** configured for connection to a complimentary fluid outlet **36** associated with the printing portion **12**. With the printhead **16** properly inserted into the scanning carriage **22** (shown in FIG. **1**) fluid communication is established between the printhead and the ink container **18** by way of the flexible fluid conduit **20**.

Each of the replaceable printing components **14** such as the printhead **16** and the ink container **18** include an information storage device **38** such as an electrical storage device or memory **38** for storing information related to the respective replaceable printer component **14**. A plurality of electrical contacts **40** are provided, each of which is electrically connected to the electrical storage device **38**. With the ink container **18** properly inserted into the ink container receiving station **24**, each of the plurality of electrical contacts **40** engage a corresponding plurality of electrical contacts **42** associated with the ink container receiving station **24**. Each of the plurality of electrical contacts **42** associated with the ink container receiving station **24** are electrically connected to the controller **26** by a plurality of electrical conductors **44**. With proper insertion of the ink container **18** into the ink container receiving station **24**, the memory **3 8** associated with the ink container **18** is electrically connected to the controller **26** allowing information to be transferred between the ink container **18** and the printer portion **12**.

Similarly, the printhead **16** includes an information storage device **38** such as an electrical storage device associated therewith. A plurality of electrical contacts **40** are electrically connected to the electrical storage **38** in a manner similar to the electrical storage device **38** associated with the ink container **18**. With the printhead **16** properly inserted into the scanning carriage **22** the plurality of electrically contacts **40** engage a corresponding plurality of electrical contacts **42** associated with the printing device **12**. Once properly inserted into the scanning carriage, the electrical storage device **38** associated with the printhead **16** is electrically connected to the controller **26** by way of a plurality of electrical conductors **46**.

Although electrical storage devices **38** associated with each of the ink container **18** and the printhead **16** are given the same element number to indicate these devices are similar, the information stored in the electrical storage device **38** associated with the ink container **18** will, in general, be different from the information stored in the electrical storage device **38** associated with the printhead **16**. Similarly, the information stored in electrical storage device **38** associated with each ink container of the plurality of ink containers **18** will in general be different and unique to the particular ink container of the plurality of ink containers **18**. The particular information stored on each electrical storage device **38** will be discussed in more detail later.

ClibPDF - www.fastio.com

Copy provided by USPTO from the PIRS Image Database on 05/12/2006

FIG. **3** represents a block diagram of the printing system **10** of the present invention shown connected to an information source or host computer **48**. The host computer **48** is shown connected to a display device **50**. The host **48** can be a variety of information sources such as a personal computer, work station, or server to name a few, that provides image information to the controller **26** by way of a data link **52**. The data link **52** may be any one of a variety of conventional data links such as an electrical link or an infrared link for transferring information between the host **48** and the printing system **10**.

The controller **26** is electrically connected to the electrical storage devices **38** associated with each of the printhead **16** and the ink container **18**. In addition, the controller **26** is electrically connected to a printer mechanism **54** for controlling media transport and movement of the carriage **22**. The controller **26** makes use of parameters and information provided by the host **48**, the memory **38** associated with the ink container **18** and memory **38** associated with the printhead **16** to accomplish printing.

The host computer **48** provides image description information or image data to the printing system **10** for forming images on print media. In addition, the host computer **48** provides various parameters for controlling operation of the printing system **10**, which is typically resident in printer control software typically referred to as the "print driver". In order to ensure the printing system **10** provides the highest quality images it is necessary that the operation of the controller **26** compensate for the particular replaceable printer component **14** installed within the printing system **10**. It is the electric storage device **38** that is associated with each replaceable printer component **14** that provides parameters particular to the replaceable printer component **14** that allows the controller **26** to utilize these parameters to ensure the reliable operation of the printing system **10** and ensure high quality print images.

Among the parameters, for example which can be stored in electrical storage device **38** associated with the replaceable printing component **14** are the following: actual count of ink drops emitted from the printhead **16**; a date code associated with the ink container **18**; date code of initial insertion of the ink container **18**; system coefficients; ink type/color: ink container size; age of the ink; printer model number or identification number; cartridge usage information; just to name a few.

The electrical storage device **38** shown in FIGS. 2A and 2B is a four terminal device. Alternatively, the electrical storage device **38** can be a two terminal device. One such two terminal device includes a power and ground terminals. Clock signals and data signals are provided on the power terminal. An example of such a two terminal memory device is a 1K Bit read/write Electrically Programmable Read Only Memory (EPROM) such as the Dallas Semiconductor part number DS 1982, manufactured by the Dallas Semiconductor Corporation.

The technique of the present invention allows ink volume information to be passed between the replaceable consumable **14** and the controller **26** in an efficient and reliable manner. It is frequently desirable to pass very accurate ink volume information between the replaceable consumable **14** and the controller **26**. For example, in the case where the replaceable consumable **14** is the ink container **18** it is necessary to have accurate ink volume information associated with the ink supply **28** passed to the controller **26** when the ink container **18** is initially inserted into the printing system **10**. This information is used by the printing system **10** to compute remaining ink in the ink supply **28** based on ink usage. Therefore, it is critical that very accurate ink volume information be associated with the ink supply **28** and that this information is accurately provided to the controller **26**. The controller **26** uses this ink volume information as a basis for determining an out-of-ink condition. It is important that this out-of-ink condition be determined accurately such that the printer is not operated without ink. Operation of the printer without ink can cause reliability problems or, if long enough, produce catastrophic failure.

The technique of the present invention must not only be capable of providing accurate ink volume information but also capable of providing accurate ink volume information over a large ink volume range. The ink volume range varies with the particular printing application. For example, large format printing requires ink containers that are typically several liters in size as a convenience to the user. Significantly smaller ink containers would require greater frequency of ink container replacement which if frequent enough can be an inconvenience to the user.

In the case of a desktop printer application for home use the ink container **18** may contain a significantly lower volume of ink on the order of 100 cubic centimeters (cc's) or less. Ink containers of larger volume for this application would likely exceed their shelf life or storage period thereby resulting in reduced print quality. In addition, ink use rate for a given application depends on the particular usage for the individual user.

FIG. **4** depicts the technique of the present invention for storing ink volume information in the electrical storage device **38**. An ink scale parameter is first determined for the ink volume associated with the ink container **18** as represented by step **56**. The ink scale parameter identifies an ink container volume range from a plurality of ink container volume ranges. For example, in the preferred embodiment for ink container volume ranges are used as shown in Table 1. The ink container scale parameter is a two-bit binary value that is used to uniquely identify each of the four ink container volume ranges. For example, the two-bit binary value of 00 represents an ink container volume range from 0–255.75 cubic centimeters (cc's). Similarly an ink container scale parameter value equal to 11, binary, represents an ink container volume range from 0–2,046 cubic centimeters.

TABLE 1

Ink Container Scale Parameter	Ink Container Volume Ranges In cc's	Resolution For 10 Bit Fill Proportion Parameter In cc's
00	0.00 to 255.75	0.25
01	0.00 to 511.50	0.50
10	0.00 to 1023	1.0
11	0.00 to 2046	2.0

A fill proportion parameter is then determined for the supply of ink for the ink container **18** as represented by step **58**. The fill proportion parameter identifies the proportion of the selected ink container volume range that represents the ink volume associated with the ink container **18**. In the preferred embodiment the fill proportion parameter is a 10-bit binary value. This 10-bit binary value can uniquely identify up to 2^{10} or 1,024 unique values. An ink volume resolution associated with the ink container **18** then varies with the ink container volume range. For example, the resolution is represented by a maximum ink container volume in the ink container range divided by the number of the unique fill proportion parameter values. For example, for the

ClibPDF - www.fastio.com

Copy provided by USPTO from the PIRS Image Database on 05/12/2006

ink container volume range 0–255.75 shown in table **1** the ink volume resolution is equal to 255.75 divided by 1,024 or approximately 0.25 cubic centimeters as shown in Table 1. Therefore, the accuracy in which the fill proportion parameter can specify the ink container volume when the ink scale parameter value selected is equal to 00 selected is 0.25 cubic centimeters. In the case where the ink container scale parameter value is 11 binary representing a much larger ink container volume range (0–2,046) then the resolution of the fill proportion parameter is 2.0 cubic centimeters. The ink scale and the fill proportion parameters are then stored in the electrical storage device **38** associated with the ink container **18** as represented by step **60**.

FIG. **5** depicts a method for reading the contents of the electrical storage device **38** that has an indeterminate size prior to insertion into the printing system **10**. As discussed previously, the printing system **10** is capable of accepting ink containers **18** that have varying ink container volumes. The technique of the present invention allows the particular ink volume associated with the ink container **18** to be accurately specified using minimal resources in the electrical storage device **38**.

In operation, the printing system when powered up represented by step **62** or when the ink container **18** is newly installed represented by step **64** a memory read request represented by steps **66** and **68** is initiated by the controller **26**. This read request directs the electrical storage device **38** to provide the ink container scale parameter and the fill proportion parameter to the controller **26**. The controller **26** interprets this information to determine the volume of ink associated with the ink container **18** as represented by step **70**. The printing system **10** is then ready for accepting a print command from the host as represented by step **72**.

The technique of the present invention allows large ink volumes to be accommodated while providing improved resolution when low ink volume ranges are used. For example, for the case where the ink container scale parameter and the fill proportion parameter are combined into a single twelve bit binary value representing ink volume associated with the ink container **18** then there are 2^{12} unique values or 4,096 unique values to specify ink volume. Dividing the maximum ink volume the system must accommodate or 2,046 cc's by the number of unique values or 4,096 yields the ink volume resolution that is approximately 0.5 cubic centimeters. In contrast, the technique of the present invention allows a resolution of 0.25 for low ink container volume ranges thereby providing improved resolution by a factor of 2 for the low ink container volume range. This improvement in resolution at the low volume range is accomplished without requiring additional information i.e. 12 total bits of information. The improvement in resolution is greatest for the low ink container volume ranges. The resolution where resolution is most important is actually decreased slightly for the high ink container volume range. This improvement in the low ink container volume range becomes more dramatic the greater the difference in ink container volume range between the highest range and the lowest range.

Although the present invention has been described with respect to the preferred embodiment where the replaceable printing components are the printhead portion **16** mounted on the print carriage **22** and the ink container **18** mounted off of the print carriage **22** the present invention is suited for other printer configurations as well. For example, the printhead portion and the ink container portion may each be mounted on the printing carriage **22**. For this configuration each of the printhead portion and the ink container portion are separately replaceable. Each of the printhead portion and the ink container includes an electrical storage portion **38** for providing information to the printing portion **12**. Each ink container of a plurality of ink containers may be separately replaceable or replaceable as an integrated unit. For the case where the plurality of ink containers is integrated into a single replaceable printing component then only a single electrical storage portion **38** is required for this single replaceable printing component.

What is claimed is:

1. An ink-jet printing system comprising:

a printer portion for depositing ink on media in response to control signals, the printer portion configured for receiving a supply of ink;

a replaceable ink container for providing a supply of ink to the printer portion, the replaceable ink container including an electrical storage device for providing parameters to the printer portion, the electrical storage device containing:

an ink container scale parameter for selecting an ink container volume range from a plurality of ink container volume ranges,

a fill proportion parameter for specifying a fill proportion for the selected ink volume range;

wherein the printer portion determines an ink volume associated with the ink container based on the fill proportion parameter and the selected ink volume range.

2. The ink-jet printing system of claim **1** wherein the ink container scale parameter is a two bit binary value.

3. The ink-jet printing system of claim **1** wherein the fill proportion parameter is a 10 bit binary value specifying a proportion of the selected ink volume range.

4. The ink-jet printing system of claim **1** wherein the printer portion contains the plurality ink volume ranges with each of the plurality of ink volume ranges having a plurality of corresponding ink container volume scale parameters associated therewith.

5. The ink-jet printing system of claim **1** wherein the replaceable ink container includes an electrical storage device wherein the electrical storage device contains the ink fill proportion parameter and the ink container scale parameter.

6. An ink container for providing ink to an ink-jet printer, the ink container comprising:

a reservoir containing a supply of ink; and

an electrical storage device for providing ink container parameters to the ink-jet printer, the electrical storage device containing:

an ink scale parameter for selecting an ink volume range from a plurality of ink volume ranges; and

a fill proportion parameter for specifying a fill proportion for the selected ink volume range associated with the supply of ink in the reservoir;

wherein an ink volume associated with the supply of ink within the reservoir is determinable based on the fill proportion parameter and the ink scale parameter.

7. The ink container of claim **6** wherein the ink scale parameter is a two bit binary value and wherein the fill proportion parameter is a 10 bit binary value specifying a proportion of the selected ink volume range.

8. The ink container of claim **6** further including a printer portion for depositing ink on media in response to control signals, the printer portion configured for receiving the ink container and determining the ink volume based on the ink scale parameter and the fill proportion parameter.

ClibPDF - www.fastio.com

Copy provided by USPTO from the PIRS Image Database on 05/12/2006

9. An electrical storage device for use with an ink container for providing information to an ink-jet printer related to an ink volume associated with the ink container, the electrical storage device comprising:

an ink scale parameter for selecting an ink volume range from a plurality of ink volume ranges; and

a fill proportion parameter for specifying a fill proportion for the selected ink volume range;

wherein the ink volume associated with the ink container is determinable based on the fill proportion parameter and the ink scale parameter.

10. The electrical storage device of claim 9 wherein the ink scale parameter is a two bit binary value and wherein the fill proportion parameter is a 10 bit binary value specifying a proportion of the selected ink volume range.

11. A method for storing ink container parameters in an electrical storage device, the electrical storage device associated with an ink container containing a volume of ink, the method comprising:

determining an ink scale parameter associated with an ink volume range for the supply of ink;

determining a fill proportion parameter for the supply of ink; and

storing the ink scale and ink fill parameter in the electrical storage device.

12. The method of claim 11 further including installing the ink container into an ink-jet printer establishing an electrical interconnect between the ink-jet printer and the electrical storage device.

13. The method of claim 12 further including transferring the ink scale parameter and the fill proportion parameter from the electrical storage device to the ink-jet printer, the ink-jet printer determining the volume of ink associated with the ink container based on the ink scale parameter and the fill proportion parameter.

* * * * *

ClibPDF - www.fastio.com

Copy provided by USPTO from the PIRS Image Database on 05/12/2006

UNITED STATES PATENT AND TRADEMARK OFFICE

CERTIFICATE OF CORRECTION

PATENT NO. : 6,089,687
DATED : July 18, 2000
INVENTOR(S) : Brian L. Helterline

It is certified that error appears in the above-identified patent and that said Letters Patent is hereby corrected as shown below:

Title page,
Second column,
Line 6, "Kevin B. Sulllivan" should read -- Kevin B. Sullivan --.

Signed and Sealed this

Thirteenth Day of November, 2001

Attest:

Nicholas P. Godici

Attesting Officer

NICHOLAS P. GODICI
Acting Director of the United States Patent and Trademark Office

ClibPDF - www.fastio.com
Copy provided by USPTO from the PIRS Image Database on 05/12/2006

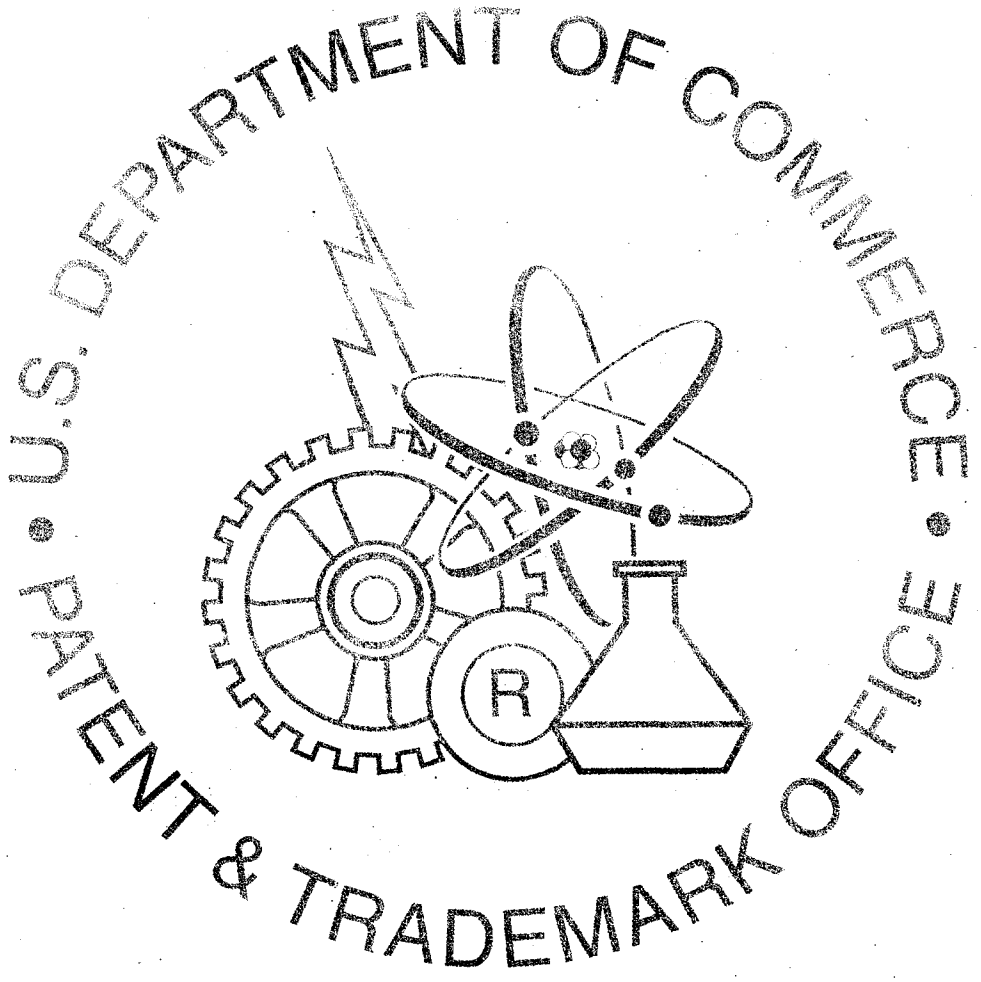
U.S. DEPARTMENT OF COMMERCE
PATENT & TRADEMARK OFFICE

EXHIBIT D

U 7012254

THE UNITED STATES OF AMERICA

TO ALL TO WHOM THESE PRESENTS SHALL COME:

UNITED STATES DEPARTMENT OF COMMERCE
United States Patent and Trademark Office

May 16, 2006

THIS IS TO CERTIFY THAT ANNEXED HERETO IS A TRUE COPY FROM THE RECORDS OF THIS OFFICE OF:

U.S. PATENT: ***6,264,301***
ISSUE DATE: ***July 24, 2001***

By Authority of the
Under Secretary of Commerce for Intellectual Property
and Director of the United States Patent and Trademark Office

H. L. JACKSON
Certifying Officer

US006264301B1

(12) United States Patent
Helterline et al.

(10) Patent No.: US 6,264,301 B1
(45) Date of Patent: Jul. 24, 2001

(54) **METHOD AND APPARATUS FOR IDENTIFYING PARAMETERS IN A REPLACEABLE PRINTING COMPONENT**

(75) Inventors: **Brian L. Helterline**, Salem, OR (US); **Ronald R. Paulsen**, Vancouver; **Joseph H. Bauman**, Brush Prairie, both of WA (US)

(73) Assignee: **Hewlett-Packard Company**, Palo Alto, CA (US)

(*) Notice: Subject to any disclaimer, the term of this patent is extended or adjusted under 35 U.S.C. 154(b) by 0 days.

(21) Appl. No.: **09/076,449**

(22) Filed: **May 11, 1998**

(51) **Int. Cl.**[7] **B41J 29/393**
(52) **U.S. Cl.** **347/19**
(58) **Field of Search** 347/19, 49, 86, 347/87; 399/107, 110, 24

(56) **References Cited**

U.S. PATENT DOCUMENTS

4,551,000	11/1985	Kanemitsu et al.	355/3 R
4,803,521	2/1989	Honda	355/14 R
4,961,088	10/1990	Gilliland et al.	355/206
5,021,828	6/1991	Yamaguchi et al.	355/209
5,137,379	8/1992	Ukai et al.	400/121
5,138,344	8/1992	Ujita	346/140 R
5,184,181	2/1993	Kurando et al.	355/260
5,272,503	12/1993	LeSueur et al.	355/208
5,363,134 *	11/1994	Barbehenn et al.	347/19
5,410,641	4/1995	Wakabayashi et al.	395/112
5,506,611 *	4/1996	Ujita et al.	347/19
5,519,422 *	5/1996	Thoman et al.	347/49
5,646,660	7/1997	Murray	347/59
5,699,091	12/1997	Bullock et al.	347/19

FOREIGN PATENT DOCUMENTS

0 812 693 A1	12/1997	(EP)	B41J/2/17
0 854 044 A2	7/1998	(EP)	B41J/2/175
0 878 307 A2	11/1998	(EP)	B41J/2/175
2 744 391	8/1997	(FR)	B41J/2/175
98/04414	2/1998	(WO)	B41J/2/17

* cited by examiner

Primary Examiner—John E. Barlow
Assistant Examiner—Charles W. Stewart, Jr.
(74) *Attorney, Agent, or Firm*—Kevin B. Sullivan

(57) **ABSTRACT**

The present disclosure relates to replaceable printing component for an ink-jet printing system having at least one replaceable printing component. The replaceable printing component includes an electrical storage device responsive to printing system control signals for transferring information between the printing component and the ink-jet printing system. The electrical storage device includes a tag family identifier for selecting a family of tags from a plurality of families of tags. Also included is a plurality of tags associated with replaceable consumable parameters. Each of the plurality of tags have a tag value associated therewith. Wherein the ink-jet printing system reads the tag family identifier from the electrical storage device to select the family of tags. Each tag of the plurality of tags read by the ink-jet printer is identified based on the selected family of tags and is used to identify the associated replaceable consumable parameter.

18 Claims, 7 Drawing Sheets

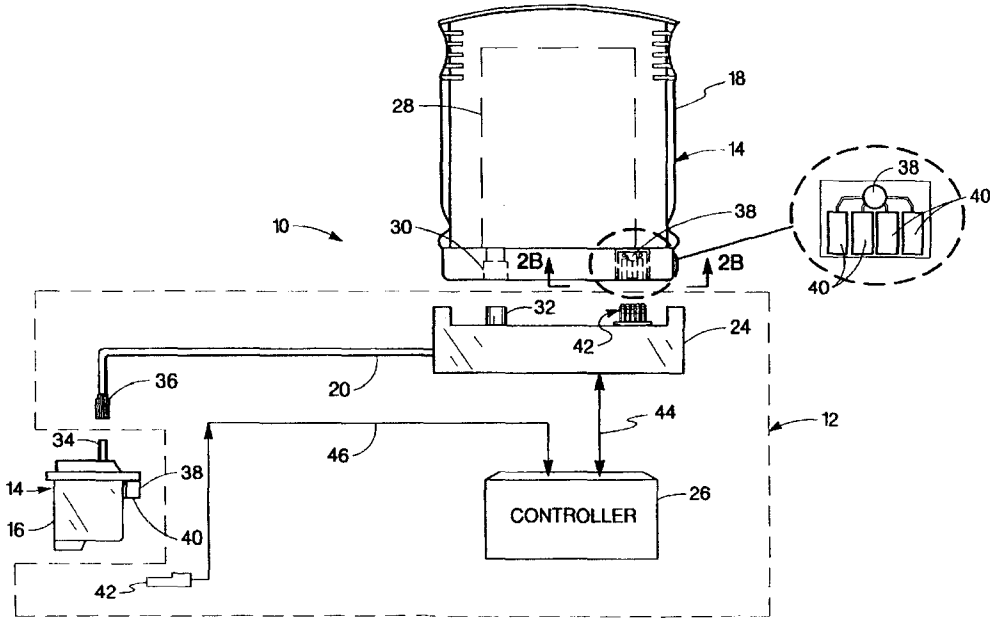

ClibPDF - www.fastio.com
Copy provided by USPTO from the PIRS Image Database on 05/12/2006

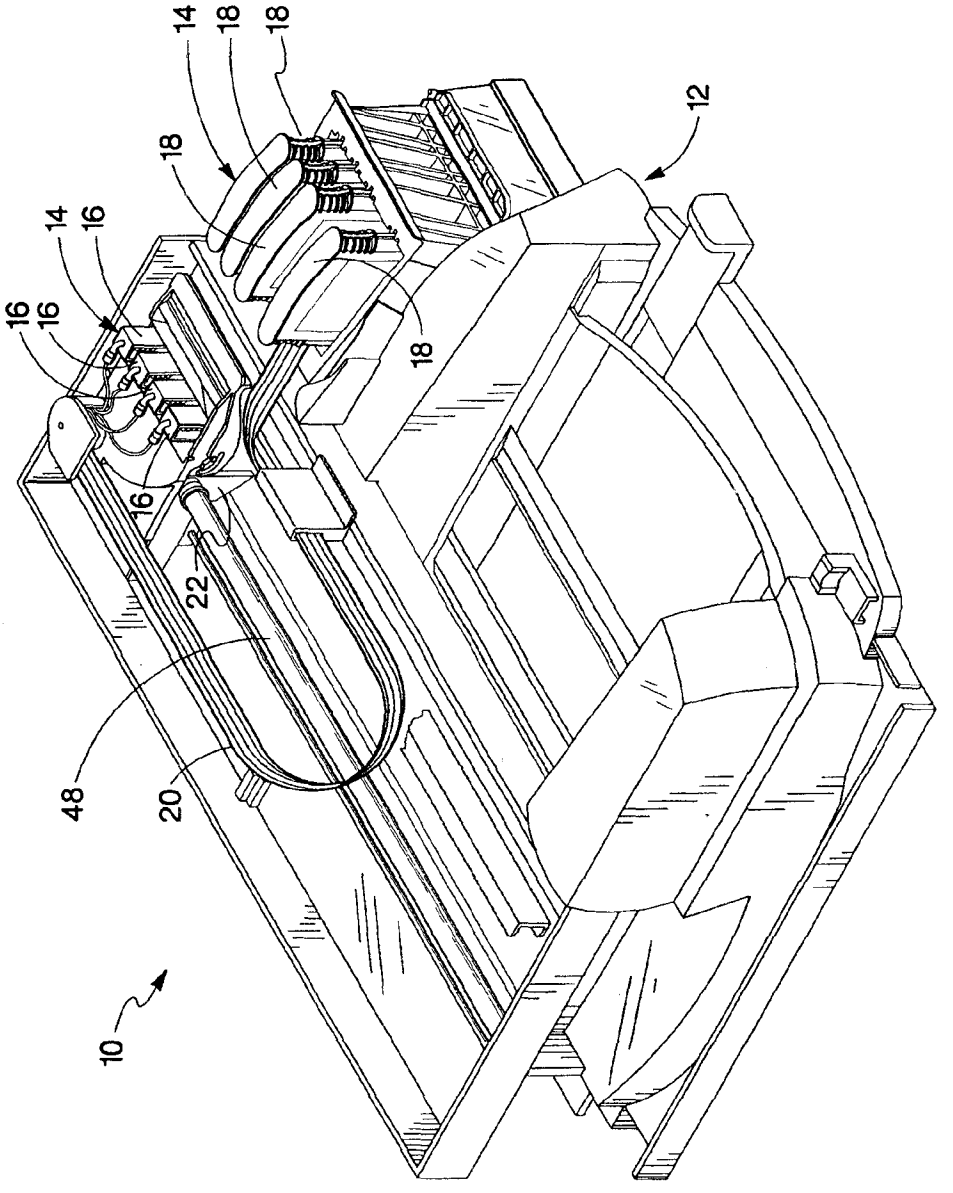

FIG. 1

ClibPDF - www.fastio.com
Copy provided by USPTO from the PIRS Image Database on 05/12/2006

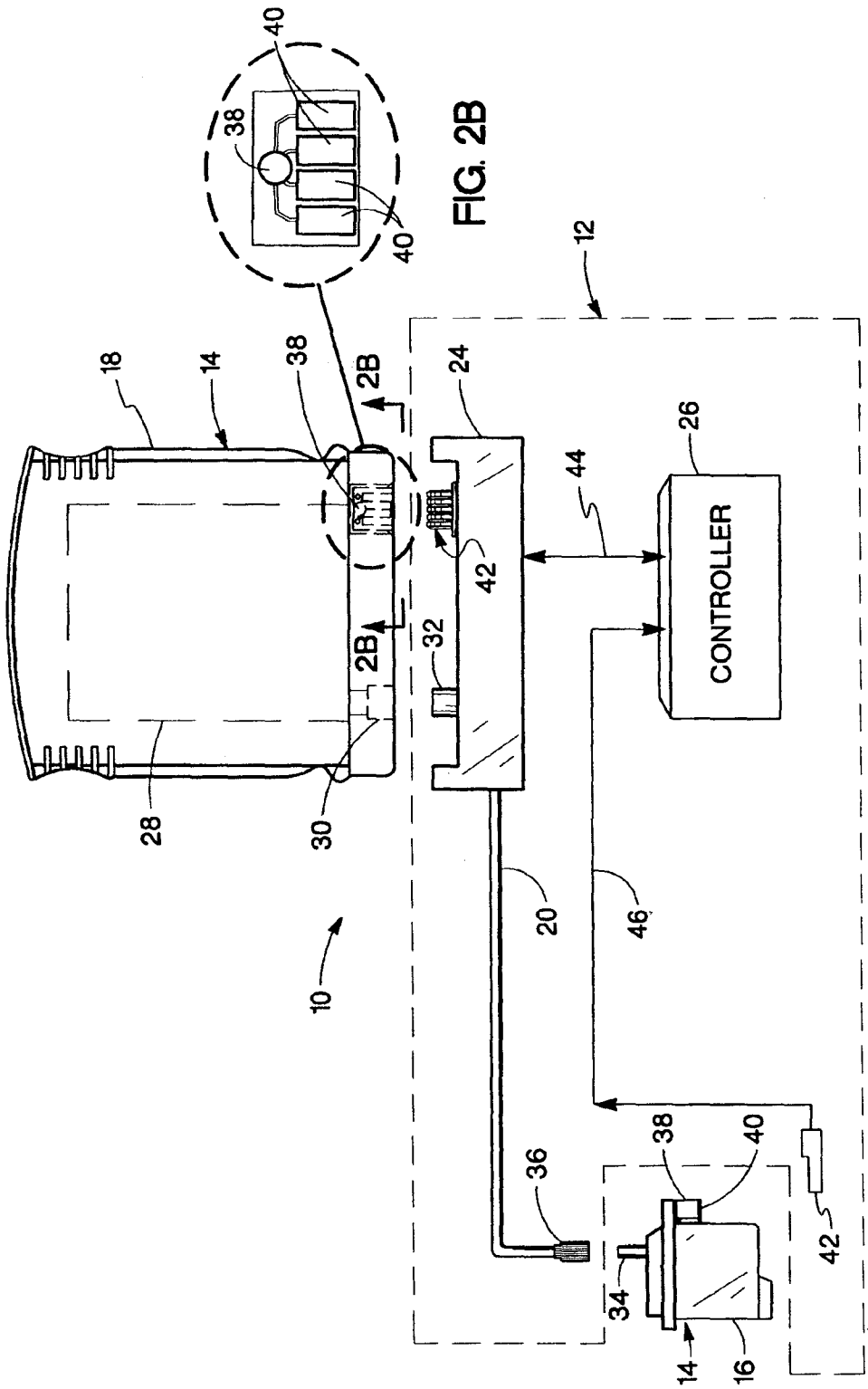

FIG. 2A

ClibPDF - www.fastio.com
Copy provided by USPTO from the PIRS Image Database on 05/12/2006

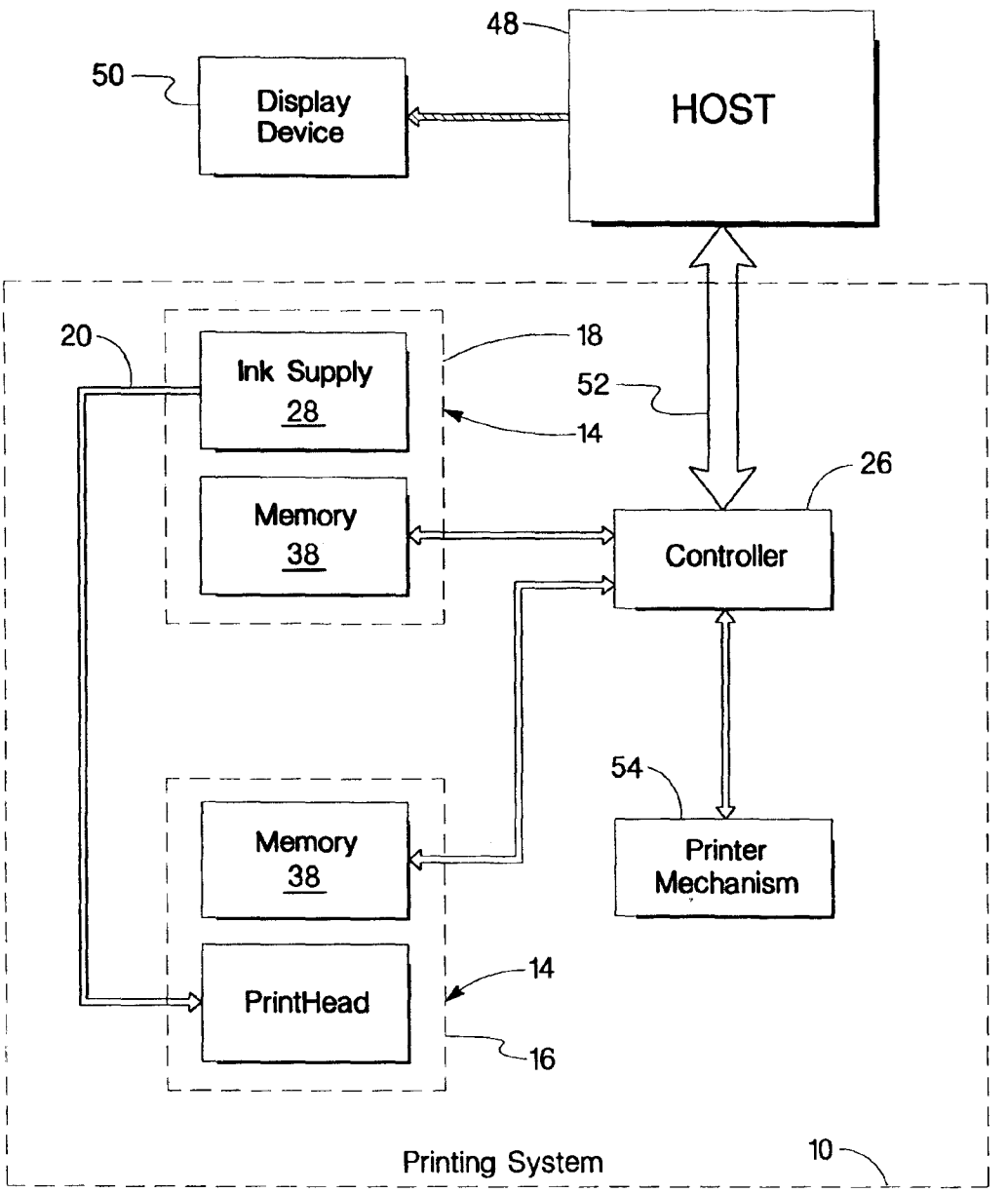

FIG. 3

ClibPDF - www.fastio.com
Copy provided by USPTO from the PIRS Image Database on 05/12/2006

ClibPDF - www.fastio.com
Copy provided by USPTO from the PIRS Image Database on 05/12/2006

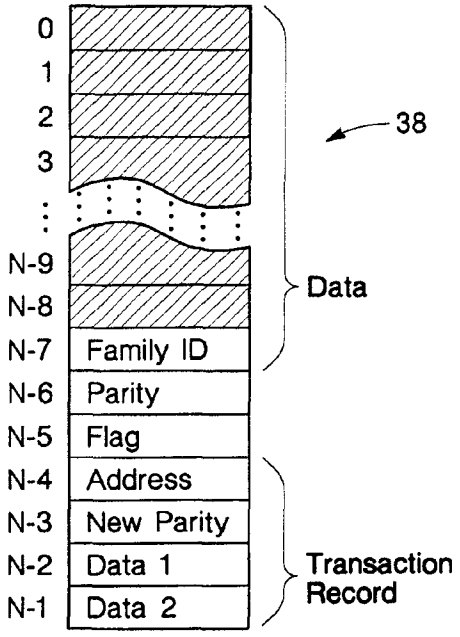

FIG. 4

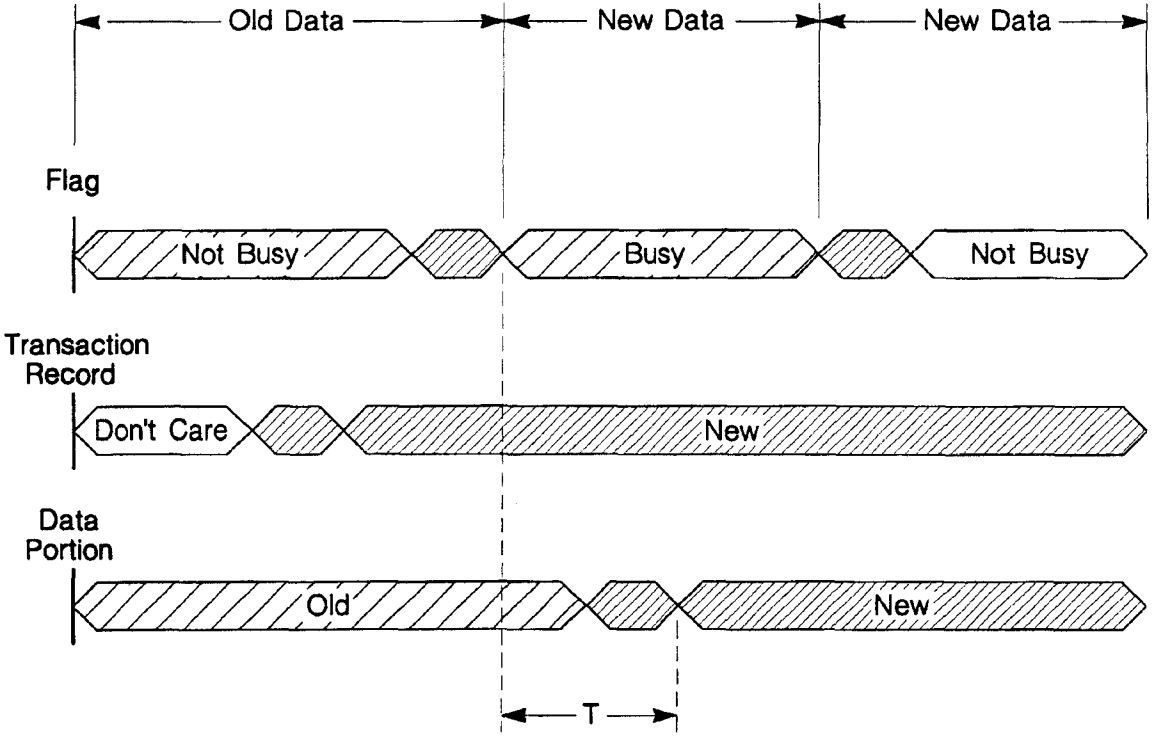

FIG. 6

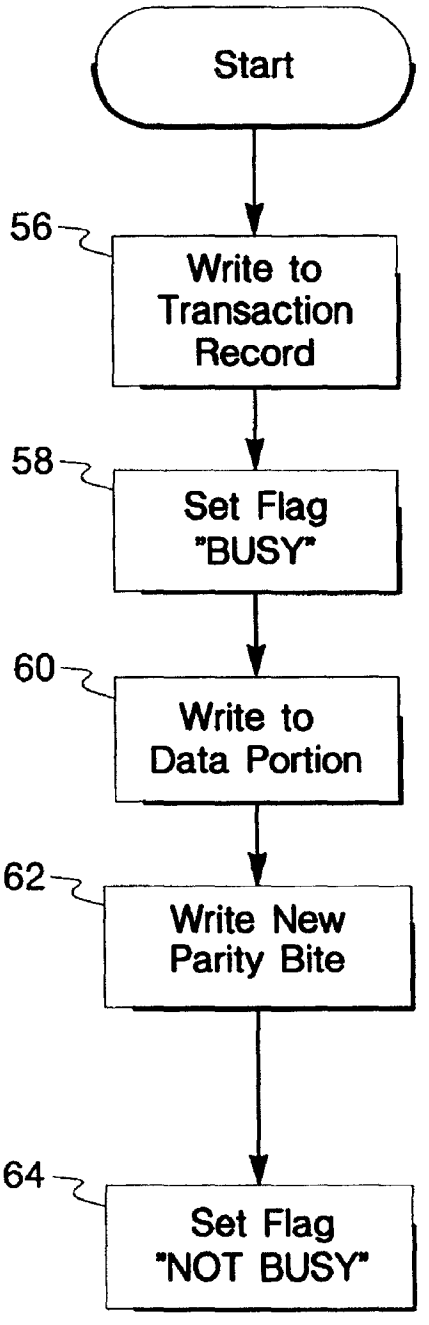

FIG. 5

ClibPDF - www.fastio.com
Copy provided by USPTO from the PIRS Image Database on 05/12/2006

Address	MSB 7	6	5	4	3	2	1	LSB 0
0	TAG ID$_1$					DATA LENGTH		
2	VALVE 1				VALUE 2		° ° °	
3	VALUE N					PAD WITH 0'S		
4	TAG ID$_2$					DATA LENGTH		
5	VALUE 1		VALUE 2		° ° °			
6	VALUE N							
⋮	⋮							
n								

FIG. 7

Byte 1								Byte 2								Byte 3							
7	6	5	4	3	2	1	0	7	6	5	4	3	2	1	0	7	6	5	4	3	2	1	0
Last Usage Date								Insertion Count								Page Count							

FIG. 8A

Byte 1								Byte 2								Byte 3							
7	6	5	4	3	2	1	0	7	6	5	4	3	2	1	0	7	6	5	4	3	2	1	0
Last Usage Date								Page Count								Insertion Count							

FIG. 8B

ClibPDF - www.fastio.com
Copy provided by USPTO from the PIRS Image Database on 05/12/2006

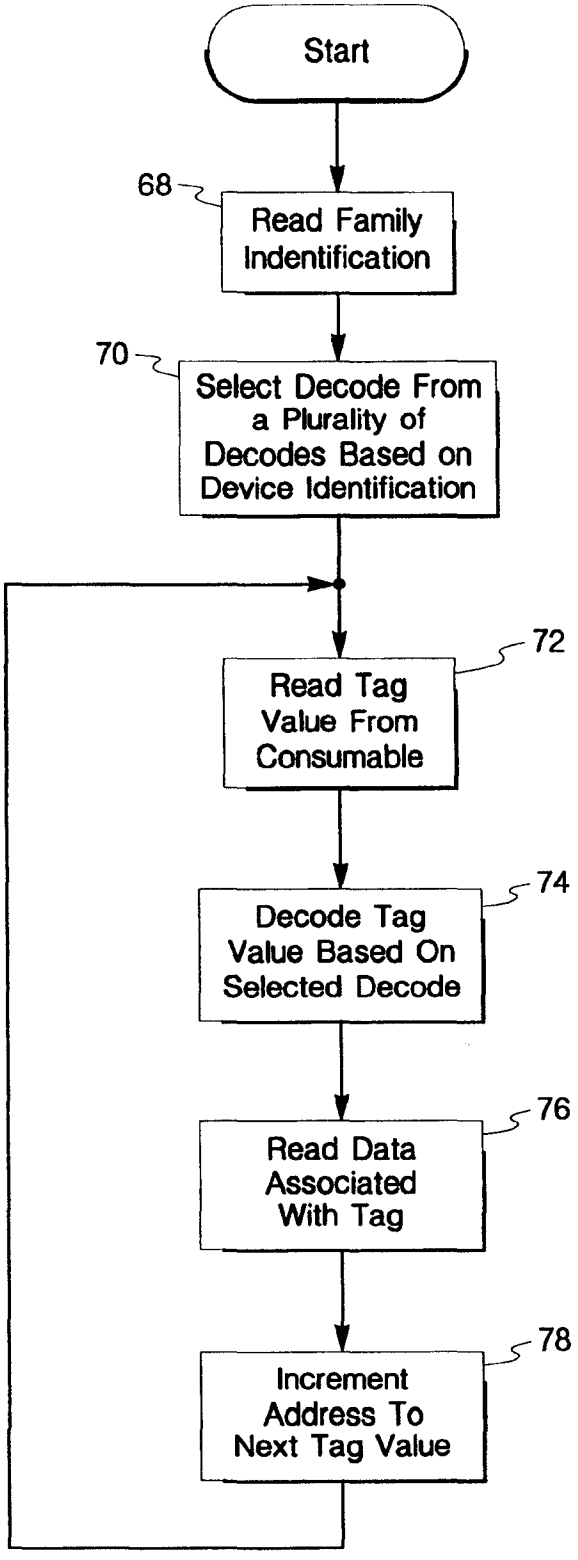

FIG. 9

ClibPDF - www.fastio.com
Copy provided by USPTO from the PIRS Image Database on 05/12/2006

METHOD AND APPARATUS FOR IDENTIFYING PARAMETERS IN A REPLACEABLE PRINTING COMPONENT

BACKGROUND OF THE INVENTION

The present invention relates to ink-jet printing systems that make use of a replaceable printing component. More particularly, the present invention relates to replaceable printing components that include an electrical storage device for providing information to the ink-jet printing system.

Ink-jet printers frequently make use of an ink-jet printhead mounted within a carriage that is moved back and forth across a print media, such as paper. As the printhead is moved across the print media, a control system activates the printhead to deposit or eject ink droplets onto the print media to form images and text. Ink is provided to the printhead by a supply of ink which is either carried by the carriage or mounted to the printing system to not move with the carriage. For the case where the ink supply is not carried with the carriage, the ink supply can be intermittently or continuously connected to the printhead for replenishing the printhead. In either case, the replaceable printing components, such as the ink container and the printhead, require periodic replacement. The ink supply is replaced when exhausted. The printhead is replaced at the end of printhead life.

It is frequently desirable to alter printer parameters concurrently with the replacement of printer components such as discussed in U.S. patent application Ser. No. 08/584,499 entitled "Replaceable Part With Integral Memory For Usage, Calibration And Other Data" assigned to the assignee of the present invention. U.S. patent application Ser. No. 08/584,499 discloses the use of a memory device, which contains parameters relating to the replaceable part. The installation of the replaceable part allows the printer to access the replaceable part parameters to insure high print quality. By incorporating the memory device into the replaceable part and storing replaceable part parameters in the memory device within the replaceable component the printing system can determine these parameters upon installation into the printing system. This automatic updating of printer parameters frees the user from having to update printer parameters each time a replaceable component is newly installed. Automatically updating printer parameters with replaceable component parameters insures high print quality. In addition, this automatic parameter updating tends to ensure the printer is not inadvertently damaged due to improper operation, such as, operating after the supply of ink is exhausted or operation with the wrong or non-compatible printer components.

It is important that the exchange of information between the printer and the replaceable printing component be accomplished in a highly reliable manner. This exchange of information should not require the intervention of the user thereby ensuring greater ease of use and greater reliability. Furthermore, it is important that the integrity of the information be preserved. In the event that the information associated with the replaceable component is corrupted in some manner, it is important that the printer be capable of identifying this data as corrupted. Furthermore, in the event that information is corrupted the printing system should be capable of continuing operation to the extent that print quality is not diminished or the printer is not damaged. Finally, it is important that the printing system have sufficient flexibility to accommodate improvements and additional printer parameters necessary to support these improvements.

SUMMARY OF THE INVENTION

The present disclosure relates to replaceable printing component for an ink-jet printing system having at least one replaceable printing component. The replaceable printing component includes an electrical storage device responsive to printing system control signals for transferring information between the printing component and the ink-jet printing system. The electrical storage device includes a tag family identifier for selecting a family of tags from a plurality of families of tags. Also included is a plurality of tags associated with replaceable consumable parameters. Each of the plurality of tags has a tag value associated therewith. Wherein the ink-jet printing system reads the tag family identifier from the electrical storage device to select the family of tags. Each tag of the plurality of tags read by the ink-jet printer is identified based on the selected family of tags and is used to identify the associated replaceable consumable parameter.

BRIEF DESCRIPTION OF THE DRAWINGS

FIG. **1** depicts a perspective view of an exemplary ink-jet printing system, shown with the cover removed, that incorporates removable printing components of the present invention.

FIGS. **2**A and **2**B depicts a schematic representation of the ink-jet printing system shown in FIG. **1** illustrating a removable ink container and printhead each of which contain an electrical storage device of the present invention.

FIG. **3** depicts a schematic block diagram of the ink-jet printing system of FIG. **1** shown connected to a host and which includes a removable ink container and printhead each of which contain the electrical storage device of the present invention.

FIG. **4** depicts a representation of the electrical storage device of the present invention illustrating a data portion and a transaction record portion.

FIG. **5** depicts a method of the present invention for transferring data between the ink-jet printing system and a replaceable printing component.

FIG. **6** depicts a representation of a timing diagram illustrating a data transaction between the ink-jet printing system and a replaceable printing component.

FIG. **7** depicts a parameter tagging technique for identifying parameter values and data organization for the electrical storage device of the present invention.

FIG. **8***a* depicts an arrangement of parameter values according to the technique of the present invention.

FIG. **8***b* depicts an improper arrangement of parameter values.

FIG. **9** depicts a method of reading replaceable printing component parameter values from the replaceable printing component.

DETAILED DESCRIPTION OF THE PREFERRED EMBODIMENT

FIG. **1** is a perspective view of one exemplary embodiment of an ink-jet printing system **10** of the present invention shown with its cover removed. The ink-jet printing system **10** includes a printer portion **12** having a plurality of replaceable printing components **14** installed therein. The plurality of replaceable printing components **14** include a plurality of printheads **16** for selectively depositing ink in response to control signals and a plurality of ink containers **18** for providing ink to each of the plurality of printheads **16**.

ClibPDF - www.fastio.com

Copy provided by USPTO from the PIRS Image Database on 05/12/2006

Each of the plurality of printheads **16** is fluidically connected to each of the plurality of ink containers **18** by a plurality of flexible conduits **20**.

Each of the plurality of printheads **16** is mounted in a scanning carriage **22**, which is scanned past a print media (not shown) as the print media is stepped through a print zone. As the plurality of printheads are moved relative to the print media, ink is selectively ejected from a plurality of orifices in each of the plurality of the printheads **16** to form images and text.

One aspect of the present invention is a method and apparatus for storing information on the replaceable printing components **14** for updating operation parameters of the printer portion **12**. An electrical storage device is associated with each of the replaceable printing components **14**. The electrical storage device contains information related to the particular replaceable printer component **14**. Installation of the replaceable printing component **14** into the printer portion **12** allows information to be transferred between the electrical storage device and the printing portion **12** to insure high print quality as well as to prevent the installation of non-compatible replaceable printing components **14**. The information provided from the replaceable printing component **14** to the printing portion **12** tends to prevent operation of the printing system **10** in a manner which damages the printing system **10** or which reduces the print quality.

Although the printing system **10** shown in FIG. **1** makes use of ink containers **18** which are mounted off of the scanning carriage **22**, the present invention is equally well suited for other types of printing system configurations. One such configuration is one where the replaceable ink containers **18** are mounted on the scanning carriage **22**. Alternatively, the printhead **16** and the ink container **18** may be incorporated into an integrated printing cartridge that is mounted to the scanning carriage **22**. Finally, the printing system **10** may be used in a wide variety of applications such as facsimile machines, postal franking machines, copiers and large format type printing systems suitable for use in displays and outdoor signage.

FIGS. **2**A and **2**B depict a simplified schematic representation of the ink-jet printing system **10** of the present invention shown in FIG. **1**. FIGS. **2**A and **2**B are simplified to illustrate a single printhead **16** and a single ink container **18** for accomplishing the printing of a single color. For the case where more than one color is desired a plurality of printheads **16** are typically used each having an associated ink container **18** as shown in FIG. **1**.

The ink-jet printing system **10** of the present invention includes a printer portion **12** having replaceable printing components **14**. The replaceable printing components **14** include a printhead **16** and an ink container **18**. The printer portion **12** includes an ink container receiving station **24** and a controller **26**. With the ink container **18** properly inserted into the ink container receiving station **24**, an electrical and a fluidic coupling is established between the ink container **18** and the printer portion **12**. The fluidic coupling allows ink stored within the ink container **18** to be provided to the printhead **16**. The electrical coupling allows information to be passed between the ink container **18** and the printer portion **12** to ensure the operation of the printer portion **12** is compatible with the ink contained in the ink container **18** thereby achieving high print quality and reliable operation of the printing system **10**.

The controller **26** controls the transfer of information between the printer portion **12** and the ink container **18**. In addition, the controller **26** controls the transfer of information between the printhead **16** and the controller **26**. Finally, the controller **26** controls the relative movement of the printhead **16** and the print media as well as selectively activating the printhead to deposit ink on print media.

The ink container **18** includes a reservoir **28** for storing ink therein. A fluid outlet **30** is provided that it is in fluid communication with the fluid reservoir **28**. The fluid outlet **30** is configured for connection to a complimentary fluid inlet **32** associated with the ink container receiving station **24**.

The printhead **16** includes a fluid inlet **34** configured for connection to a complimentary fluid outlet **36** associated with the printing portion **12**. With the printhead **16** properly inserted into the scanning carriage **22** (shown in FIG. **1**) fluid communication is established between the printhead and the ink container **18** by way of the flexible fluid conduit **20**.

Each of the replaceable printing components **14** such as the printhead **16** and the ink container **18** include an information storage device **38** such as an electrical storage device or memory **38** for storing information related to the respective replaceable printer component **14**. A plurality of electrical contacts **40** are provided, each of which is electrically connected to the electrical storage device **38**. With the ink container **18** properly inserted into the ink container receiving station **24**, each of the plurality of electrical contacts **40** engage a corresponding plurality of electrical contacts **42** associated with the ink container receiving station **24**. Each of the plurality of electrical contacts **42** associated with the ink container receiving station **24** are electrically connected to the controller **26** by a plurality of electrical conductors **44**. With proper insertion of the ink container **18** into the ink container receiving station **24**, the memory **38** associated with the ink container **18** is electrically connected to the controller **26** allowing information to be transferred between the ink container **18** and the printer portion **12**.

Similarly, the printhead **16** includes an information storage device **38** such as an electrical storage device associated therewith. A plurality of electrical contacts **40** are electrically connected to the electrical storage **38** in a manner similar to the electrical storage device **38** associated with the ink container **18**. With the printhead **16** properly inserted into the scanning carriage **22** the plurality of electrically contacts **40** engage a corresponding plurality of electrical contacts **42** associated with the printing device **12**. Once properly inserted into the scanning carriage, the electrical storage device **38** associated with the printhead **16** is electrically connected to the controller **26** by way of a plurality of electrical conductors **46**.

Although electrical storage devices **38** associated with each of the ink container **18** and the printhead **16** are given the same element number to indicate these devices are similar, the information stored in the electrical storage device **38** associated with the ink container **18** will, in general, be different from the information stored in the electrical storage device **38** associated with the printhead **16**. Similarly, the information stored in electrical storage device **38** associated with each ink container of the plurality of ink containers **18** will in general be different and unique to the particular ink container of the plurality of ink containers **18**. The particular information stored on each electrical storage device **38** will be discussed in more detail later.

FIG. **3** represents a block diagram of the printing system **10** of the present invention shown connected to an information source or host computer **48**. The host computer **48** is shown connected to a display device **50**. The host **48** can be a variety of information sources such as a personal

ClibPDF - www.fastio.com

Copy provided by USPTO from the PIRS Image Database on 05/12/2006

computer, work station, or server to name a few, that provides image information to the controller **26** by way of a data link **52**. The data link **52** may be any one of a variety of conventional data links such as an electrical link or an infrared link for transferring information between the host **48** and the printing system **10**.

The controller **26** is electrically linked to the electrical storage devices **38** associated with each of the printhead **16** and the ink container **18**. In addition, the controller **26** is electrically linked to a printer mechanism **54** for controlling media transport and movement of the carriage **22**. This link may be a variety of different linkages such as electrical or optical linkage that supports information transfer. The controller **26** makes use of parameters and information provided by the host **48**, the memory **38** associated with the ink container **18** and memory **38** associated with the printhead **16** to accomplish printing.

The host computer **48** provides image description information or image data to the printing system **10** for forming images on print media. In addition, the host computer **48** provides various parameters for controlling operation of the printing system **10**, which is typically resident in printer control software typically referred to as the "print driver". In order to ensure the printing system **10** provides the highest quality images it is necessary that the operation of the controller **26** compensate for the particular replaceable printer component **14** installed within the printing system **10**. It is the electric storage device **38** that is associated with each replaceable printer component **14** that provides parameters particular to the replaceable printer component **14** that allows the controller **26** to utilize these parameters to ensure the reliable operation of the printing system **10** and insure high quality print images.

Among the parameters, for example which can be stored in electrical storage device **38** associated with the replaceable printing component **14** are the following: actual count of ink drops emitted from the printhead **16**; a date code associated with the ink container **18**; date code of initial insertion of the ink container **18**; system coefficients; ink type/color: ink container size; age of the ink; printer model number or identification number; cartridge usage information; just to name a few.

FIG. **4** is a representation of the memory device **38** that is used in conjunction with the controller **26** of the printing system **10** for ensuring data integrity for data transfers between the memory device **38** and the controller **26**. The memory device **38** is organized as an 8 bit by N memory where N represents the size of the memory device. Each individually addressable 8 bit memory location is represented by a range of address values from 0 to N−1. Although FIG. **4** is used is to illustrate some of the information stored in the memory device **38**, the memory device **38** may contain additional information not discussed. In addition, the location of the information in the memory device **38** may be different from those locations shown in FIG. **4**. It is important that the controller **26** in the printing system **10** know where at least some of the particular information is stored.

The memory device **38** includes a portion for storing data and a portion for storing a transaction record. The data portion contains various data that is related to the replaceable printing component **14**. The transaction record maintains a record of each transaction between the memory device **38** and the controller **26**. In the event that a transaction is interrupted before completion the transaction record can be used to restore the data lost in the interrupted transaction. Because the transaction record is retained in the replaceable printing component **14** then the data lost in the last transaction can be restored even if the replaceable printing component **14** is inserted into a different printing system. In the event the transaction is interrupted by a loss of power, once the power is restored the last transaction can be restored. In this manner, data integrity for the replaceable printing component **14** is maintained.

Memory address values 0 through N−7 contains data that includes various parameters relating to the replaceable printing component **14** and tag information. The tag information is used for identifying these various parameters and will be discussed with respect to FIG. **7**.

Memory address values N−4 through N−1 contain transaction record information. It is the use of the transaction technique of the present invention that ensures data transactions between the controller **26** and the memory **38** if corrupted can be corrected to insure the integrity of data transfer between the printer **10** and the replaceable printing component **14**. Because data transfers between the controller **26** and the memory device **38** may be interrupted; it is critical that some technique be used to insure data integrity. For example, in the case where the replaceable printing component **14** is the ink container **18**, it is possible to remove the ink container **18** while the controller **26** is transferring data to the memory **38**. If this data transfer is interrupted and data is lost then the integrity of the data is compromised. It is therefore important that there be some way of identifying when a data transaction between the controller **26** and the printing system **10** and the replaceable printing component **14** is not properly accomplished. If a transaction is not properly accomplished the transaction record provides a mechanism to recover this data that was lost in the interrupted transaction to preserve data integrity within the printing system **10**.

In addition to the data portion represented by address values 0 through N−7 and the transaction record portion represented by address values N−4 through N−1 there are several additional values that are stored in memory device **38** that will be discussed specifically. Memory address value N−7 contains family identification information, memory address value N−6 contains parity information and memory address value N−5 contains flag information. The family identification information will be discussed in more detail with respect to FIG. **7**.

It is the parity information, the flag information, and the transaction record which are used together to preserve the integrity of data transfers between the controller **26** and the memory **38**. The transaction record portion includes an address byte, a new parity byte, two bytes of data designated data byte **1** and data byte **2**. The transaction record portion stores data that is subsequently written by the printing system **10** to the data portion. If the subsequent write to the data portion is interrupted, the transaction record is used to restore the contents of this interrupted data write. It will be helpful to first discuss the transaction record portion in more detail before explaining the technique of the present invention for preserving data integrity.

The address portion of the transaction record portion contains the address value of the first byte of data to be subsequently written into the data portion during a write transaction. The address value acts as a pointer that points to the memory address that is to be altered by the subsequent data write. The data byte **1** represents the data value that is to be written in the subsequent write transaction. Data byte **2** represents the data value that is to be written to the next sequential address following the address corresponding to

ClibPDF - www.fastio.com

Copy provided by USPTO from the PIRS Image Database on 05/12/2006

data byte **1**. Therefore, the subsequent write transaction writes the value of data byte **1** to the address value of the pointer stored in the transaction record. The subsequent write transaction also writes the value of data byte 2 to the next sequential memory address value from the memory address value. Therefore, data byte **1** is placed in the address of the pointer and data byte **2** is placed in the address of the pointer plus one.

The new parity value within the transaction record portion represents a parity value to replace the parity byte in address N–6 after data byte **1** and data byte **2** are used to replace data in the data portion. The new parity value is determined by performing a parity function over the entire data area, and the contents of the transaction record portion so that after data in the data portion is replaced within data byte **1** and data byte **2** the parity is correct. Therefore, in the event of data loss during a transaction the data and parity is restored placing the memory in the same condition it would be in if the transaction was not interrupted.

The flag information stored in address value N–5 contains a flag value which indicates the state of the transaction record. One flag value is used to indicate that the transaction record is "busy" representing that new valid data has been recorded in the transaction record. Another flag value is used to indicate that the transaction record is "not busy" representing that either data is not valid in the transaction record or the data in the transaction record is not new data.

FIG. **5** and FIG. **6** will be used to illustrate the write transaction technique for preventing the corruption of data in the event the data transaction is interrupted. Data transfers from the printing system **10** to the replaceable printing component **14** are accomplished by the controller **26** which transfers data to memory **38**. This data transfer involves first writing to the transaction record in memory **38** as represented by step **56** in FIG. **5**. Writing to the transaction record includes writing up to two data bytes, the address byte or pointer and a new parity value to the transaction record portion of memory **38** as shown in FIG. **4**. The flag value stored in address value N–5 is updated to indicate that the transaction record has new or valid data as represented by step **58**. In addition, the flag indicates that the write operation to the transaction record was accomplished successfully. Next, data is written to the data portion represented by address values 0 through N–7 of the memory **38** as shown in step **60**. A new parity byte is written to the parity location value N–6 as represented by step **62**. The flag is then set to "not busy" as represented by step **64**.

Each write operation represented by steps **56**, **58**, **60**, **62** and **64** in FIG. **5** is verified by the printing system **10**. If write operation is not completed the write operation is repeated and again verified. If after a predetermined number of retries are attempted without verification of the write operation then the replaceable printing component **14** is defective.

If a write operation represented by steps **56**, **58**, **60**, **62**, and **64** is interrupted such as by the removal of the replaceable printing component **14** or a loss of power occurs then the printing system **10** can recover. If the write to the transaction record has not been completed then the printing system **10** can repeat this write operation. If the write to the data portion or the write to the parity byte is not completed then these values are restored using values from the transaction record.

FIG. **6** represents a simplified timing diagram of the write transaction method as discussed with respect to FIG. **5**. The timing diagram represents the state of each of the flag portion, and data portion of memory **38**. Interruptions in the transaction process that occur after the busy flag has been set but prior to the new data arriving to the data portion as represented by time T as shown in FIG. **6** can be recovered from the transaction record.

FIG. **7** represents the data organization of data in memory device **38**. One aspect of the present invention is the organization of data in the memory device **38** that ensures the integrity of data in the event that a single write transaction is corrupted. It is important that parameter values associated with the replaceable printing component **14** be sized and organized properly such that in the event that the sequence of transactions is interrupted, a parameter is not partially updated. This technique ensures that the replaceable printing component parameters are either updated completely or not updated at all. In the event that these parameters are not updated due to an interruption of the single transaction, then that transaction can be recovered using the transaction record to update those parameters completely. If data were corrupted without a means for recovering the integrity of the system would be compromised.

As discussed previously the memory device **38** is organized in bytes of data with each data byte containing eight individual bits of information. These bits of information are labeled values 0–7 in FIG. **7** with 0 being the least significant bit and bit **7** being the most significant bit. Each individual byte of data is addressable as represented by address values from 0–N in FIG. **7**.

A tagging scheme is used to identify or label stored data. The use of a tagging scheme provides greater flexibility in organizing data in the memory device **38**. The use of a tagging scheme allows greater flexibility in the location and size of data within the memory device **38**. In addition, the tagging scheme allows for new data values to be added for adding new features and improvements to the printing system while allowing for downward compatibility. For example, the replaceable printing component **14** may include data for providing a particular feature for new printers. Older printers that do not have that feature can still make use of the replaceable printing component **14** by simply ignoring the data associated with tags that the older printing system does not recognize. In this manner, number of versions of the replaceable printing component **14** is reduced, tending to reduce manufacturing costs of the replaceable printing component **14**.

The tagging scheme makes use of tag identifiers (IDs) that are selectively positioned in the data portion of memory device **38** to identify data parameters or data fields that are associated with each tag ID. In the preferred embodiment, the tag ID's are a 5-bit values identifying the data parameter values that follow. In addition to the tag ID a data length parameter is provided to identify the size of the data parameters associated with the tag ID. In the preferred embodiment, the data length parameter is a 3-bit value that identifies the number of bytes from 0 to 7 that follow. Therefore, if a particular tag is not recognized the printing system uses the data length value to determine where the next tag resides in the memory device **38**. This next tag is then read in to determine if this tag is recognized. If the tag is recognized, then the parameter values associated with that tag can be read in by the printing system **10**.

In the preferred embodiment, each tag ID is located on a byte boundary. Therefore, when reading the next tag ID it will always begin on the byte boundary. The parameter values associated with the tag ID do not have to start on byte boundaries. It is important that each parameter stored in the

ClibPDF - www.fastio.com

Copy provided by USPTO from the PIRS Image Database on 05/12/2006

replaceable printing component **14** be updated in a single transaction to insure data integrity. FIGS. **8**A and **8**B illustrate how the parameter values are sized and arranged to insure data integrity in the memory device **38**. In the example shown in FIGS. **8**A and **8**B the tag ID identifies that the parameter values which follow are a 10 bit last usage date value, a 6 bit insertion count value, and an 8 bit page count value. Each of these parameter values are transferred between the printer and the replaceable printing component **14** using the write transaction technique previously discussed. The data is transferred two bytes at a time with the first transaction sends byte **1** and byte **2** which includes the last usage date parameter and the insertion count parameter and a second transaction sending byte **3** which includes the page count parameter. If either the first or second transaction is interrupted, no parameter values are partially updated because the parameters do not span more than one transaction.

In contrast, if the parameter values were sized and arranged such that the tag identifier indicated that the parameters were in a different order as shown in FIG. **8***b* then a different result occurs. For the case where the data values include a 10 bit last usage value, an 8 bit page count value then these values or parameters span more than one transaction between the replaceable printing component **14** and the printer. The page count parameter spans between byte **2** that is part of one transaction and byte **3** that is part of a different transaction. Therefore, 6 bits of the page count would be transmitted in one transaction and 2 bits of the page count together with insertion count would be transmitted on the second transaction. If the system would be interrupted at any time, the value of the page count parameter may be only partially updated and therefore provide an inaccurate value. It is essential that the parameter values not span more than one transaction to insure the integrity of the data in the printing system **10**.

The groupings of data bytes for each transaction can vary. It is important that whatever the grouping of data bytes that both the controller **26** and the memory device **38** both use the selected grouping. For example, in page mode 4 bytes of data are transferred for each transaction. The controller **26** requests data parameters in a specified order and the data parameters are sized and positioned so that no data parameter spans more than one transaction.

FIG. **9** depicts a method for reducing the size or number of bits required for the tag ID. Because the tag ID consumes space in the memory **38** as well as requires overhead in the transactions between the printing system **10** and the replaceable printing component **14** it is beneficial to reduce the size of the tag ID.

A family ID is provided with each memory device **38** as shown in FIG. **4**. The family ID is shown in address value N−7 only for illustrative purposes. The family ID in general will be in a memory location that is known to the printer control electronics **26**. In the preferred embodiment the family ID is a 5-bit value that identifies the particular family of replaceable printing component **14**. The printing system **10** uses this family ID to interpret the tag ID. This may be implemented by using a plurality of different Decodes with each Decode unique to a particular family ID. The printing system **10** selects the proper Decode based on family ID and then uses this Decode to decode or interpret each tag ID associated with that family.

In operation, the printing system **10** reads the family ID from the memory **38** as represented by step **68**. As represented by step **70** the printing system then selects the proper Decode from a plurality of different Decodes based on the family ID read in step **68**. The printer then reads the memory device **38** until it recognizes a tag ID value as represented by step **72**. This tag ID is decoded based on the Decode selected in step **70**. The Decoded tag ID identifies the data that follows the tag as represented by step **74**. This data is then read by the printing system **10** as represented by step **76**. The printing system **10** then jumps to the next tag ID as represented step **78** and reads this tag ID as represented by step **72**. This process continues until all of the tags and associated parameters have been read into the printing system.

In the case where the printing system **10** includes a plurality of replaceable printing components **14** as shown in FIG. **1**, if each replaceable printing component parameter value required a unique tag ID, the tag ID field size would be very large if a separate family Decode for each family type was not used. This large tag ID would consume significantly more memory as well as require greater overhead in the transactions with the printing device. Therefore, there is a significant saving by providing a family ID and then interpreting the tag IDs based on this family ID.

Although the present invention has been described with respect to the preferred embodiment where the replaceable printing components **14** are the printhead portion **16** mounted on the print carriage **22** and the ink container **18** mounted in the receiving station **24** the present invention is suited for other printer configurations as well. For example, the printhead portion and the ink container portion may each be mounted on the printing carriage **22**. For this configuration each of the printhead portion and the ink container portion are separately replaceable. Each of the printhead portion and the ink container includes an electrical storage portion **38** for providing information to the printing portion **12**. Each of the ink containers of a plurality of ink containers may be separately replaceable or replaceable as an integrated unit. For the case where the plurality of ink containers is integrated into a single replaceable printing component **14** then only a single electrical storage portion **38** may be required for this single replaceable printing component **14**.

What is claimed is:

1. A replaceable printing component for an ink-jet printing system having at least one replaceable printing component, the replaceable printing component comprising:

an electrical storage device responsive to printing system control signals for transferring information between the printing component and the ink-jet printing system, the electrical storage device including:

a tag family identifier identifying a family of tags of a plurality of families of tags; and

a plurality of tags within the family of tags, each tag of the plurality of tags is associated with a replaceable consumable parameter, with each tag of the plurality of tags having a tag value associated therewith, wherein the ink-jet printing system reads the tag family identifier from the electrical storage device to select the family of tags, each tag of the plurality of tags read by the ink-jet printer is identified based on the selected family of tags and is used to identify the associated replaceable consumable parameter.

2. The replaceable printing component of claim **1** wherein the tag family identifier is a 5 bit value that uniquely identifies the family of tags from the plurality of families of tags.

3. The replaceable printing component of claim **1** wherein each tag of the plurality of tags includes a parameter identifier portion and a size portion.

4. The replaceable printing component of claim **1** wherein the replaceable printing component is a replaceable ink-jet

ClibPDF - www.fastio.com

Copy provided by USPTO from the PIRS Image Database on 05/12/2006

printhead, the replaceable ink-jet printhead responsive to control signals for selectively depositing ink on print media and wherein the tag family identifier corresponds with the replaceable ink-jet printhead.

5. The replaceable printing component of claim 1 wherein the replaceable printing component is a replaceable ink container containing a quantity of ink, the replaceable ink container providing ink to the ink-jet printing system and wherein the tag family identifier corresponds with the replaceable ink container.

6. A method for storing information on an electrical storage device, the electrical storage device for use with a replaceable consumable for an ink-jet printing system, the method comprising:

storing a family identification value on the electrical storage device, the family identification value indicative of a particular replaceable consumable of a plurality of different replaceable consumables; and

storing a plurality of parameter identifiers on the electrical storage device, the plurality of parameter identifiers identifying data contained in the electrical storage device, the plurality of parameter identifiers selected based on the family identification value.

7. The method for storing information on an electrical storage device of claim 6 wherein before storing the family identification value the method includes determining the family identification value based on the particular replaceable consumable.

8. The method for storing information on an electrical storage device of claim 6 wherein the family identification value is a 5-bit value.

9. The method for storing information on an electrical storage device of claim 6 wherein each parameter identifier of the plurality of parameter identifiers specifies a parameter stored in the electrical storage device of the replaceable consumable.

10. An ink-jet printing system for selectively depositing ink on print media, the ink-jet printing system comprising:

a replaceable printing component having an electrical storage device associated therewith, the electrical storage device having a family identifier, a plurality of tags and a plurality of parameters stored therein, with the family identifier selected from a plurality of family identifiers based on the replaceable printing component the plurality of tags and the plurality of parameters associated with the replaceable printing component; and

a printer portion for receiving the replaceable printing component, the printer portion reading the family identifier and each of the plurality of tags, the printer portion determining a parameter identification from a plurality of parameter identifications based on the family identifier.

11. The ink-jet printing system of claim 10 wherein the replaceable printing component is a replaceable ink-jet printhead, the replaceable ink-jet printhead responsive to control signals for selectively depositing ink on print media and wherein the family identifier corresponds with the replaceable ink-jet printhead.

12. The ink-jet printing system of claim 10 wherein the replaceable printing component is a replaceable ink container containing a quantity of ink, the replaceable ink container providing ink to the ink-jet printing system and wherein the family identifier corresponds with the replaceable ink container.

13. The ink-jet printing system of claim 10 wherein the family identifier is a 5-bit value that identifies the replaceable printing component from a plurality of replaceable printing components.

14. A method for reading parameters from a replaceable printing component, the replaceable printing component insertable into an ink-jet printing system for transferring information between an electrical storage device of the replaceable printing component and the ink-jet printing system, the method comprising:

reading a tag family identifier, a tag and a parameter value associated with the tag from the electrical storage device of the replaceable printing component; and

determining a tag parameter from a plurality of tag parameters based on the tag family identifier, the tag parameter having a value corresponding to the parameter value.

15. The method for reading parameters from the replaceable printing component of claim 14 further including storing the parameter value in a location based on the tag parameter.

16. The method for reading parameters from the replaceable printing component of claim 14 wherein the replaceable printing component is a replaceable ink-jet printhead, the replaceable ink-jet printhead responsive to control signals for selectively depositing ink on print media and wherein the tag family identifier corresponds with the replaceable ink-jet printhead.

17. The method for reading parameters from the replaceable printing component of claim 14 wherein the replaceable printing component is a replaceable ink container containing a quantity of ink, the replaceable ink container providing ink to the ink-jet printing system and wherein the tag family identifier corresponds with the replaceable ink container.

18. The method for reading parameters from the replaceable printing component of claim 14 wherein the tag family identifier is a 5-bit value that identifies the replaceable printing component from a plurality of replaceable printing components.

* * * * *

ClibPDF - www.fastio.com

Copy provided by USPTO from the PIRS Image Database on 05/12/2006

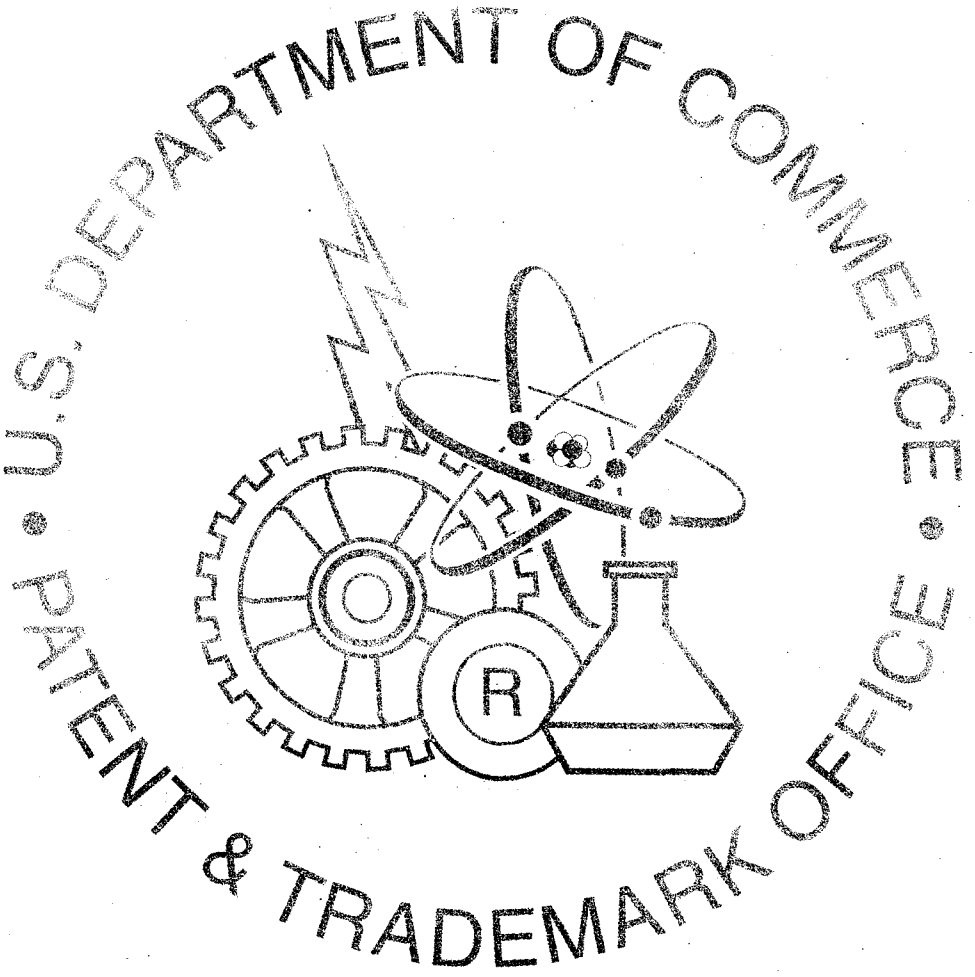
U.S. DEPARTMENT OF COMMERCE
PATENT & TRADEMARK OFFICE
R