ORIGINAL

Russell B. Hill (SBN 190070)
Michael J. Stimson (SBN 224817)
Jesse D. Mulholland (SBN 222393)
Michael C. Chou (SBN 260685)
HOWREY LLP
4 Park Plaza, Suite 1700
Irvine, CA 92614
Telephone: (949) 721-6900
Facsimile: (949) 721-6910
Email: hillr@howrey.com
Email: stimsonm@howrey.com
Email: mulhollandj@howrey.com
Email: choum@howrey.com

Attorneys for Plaintiff
Kornit Digital Ltd.

FILED
2009 JUN 10 PM 2:54
CLERK U.S. DISTRICT COURT
CENTRAL DIST. OF CALIF.
LOS ANGELES
BY

UNITED STATES DISTRICT COURT

CENTRAL DISTRICT OF CALIFORNIA

SACV09-0689 AG MLGx

KORNIT DIGITAL LTD.

Plaintiff,

vs.

ALL AMERICAN MANUFACTURING & SUPPLY COMPANY; ANAJET, INC.; BELQUETTE, INC.; BROTHER INTERNATIONAL CORPORATION; EXPAND SYSTEMS, LLC; INTERNATIONAL DECORATING TECHNOLOGIES, LLC; INTERNATIONAL MACHINE GROUP INC.; M&R SALES AND SERVICES; MELCO INDUSTRIES, INC.; MESA DISTRIBUTORS, INC.; MS PRINTING SOLUTIONS USA; AND OMNIPRINT INTERNATIONAL, INC.

Defendants.

Case No.

COMPLAINT FOR PATENT INFRINGEMENT

[DEMAND FOR JURY TRIAL]

Plaintiff, Kornit Digital Ltd. ("Kornit"), for its claims against defendants All American Manufacturing & Supply Company ("All American"), Anajet, Inc. ("Anajet"), Belquette, Inc. ("Belquette"), Brother International Corporation ("Brother"), eXpand Systems, LLC ("eXpand"), International Decorating Technologies, LLC ("International Decorating"), International Machine Group Inc. ("IMG"), M&R Sales and Services ("M&R"), Melco Industries, Inc. ("Melco"), MESA Distributors, Inc. ("MESA"), MS Printing Solutions USA ("MS Printing"), and OmniPrint International, Inc. ("OmniPrint"), alleges as follows:

JURISDICTION

1. This is an action for patent infringement arising under the patent laws of the United States, 35 U.S.C. § 271, *et seq*. This Court has subject matter jurisdiction under 28 U.S.C. § 1331, 1332(a)(2), and 1338.

2. The amount in controversy exceeds $75,000, exclusive of interest and costs, is between citizens of a state and a citizen of a foreign state, and involves infringement of a U.S. Patent.

3. This Court has personal jurisdiction over Defendants by way of Defendants' purposeful engagement in significant commercial activities including, among other things, making, using, offering for sale, selling and/or importing infringing printing systems within the state of California and this district.

4. On information and belief, personal jurisdiction over All American, Anajet, Brother, eXpand, International Decorating, M&R, Melco, MESA, and MS Printing in this district is additionally proper because they have used, offered to sell, and/or sold infringing printing systems at the Imprinted Sportswear Show ("ISS") in Long Beach, California from January 23 to 25, 2009.

5. Moreover, on information and belief, personal jurisdiction over Anajet, Brother, International Decorating, IMG, M&R, Melco, MESA, and OmniPrint in this district is additionally proper because they have offices and/or distributors for their infringing printing systems in the state of California.

VENUE

6. Venue is proper in this district pursuant to 28 U.S.C. §1391(b)(2), (c) and 1400(b).

PARTIES

7. Kornit is an Israel corporation with its principal place of business at 12 Ha'Amal St., Afek Park, Rosh-Ha'Ayin 48092, Israel.

8. On information and belief, All American is a Pennsylvania corporation with a place of business at 495 E. Erie Avenue, Philadelphia, PA 19134. On information and belief, All American makes, uses, offers to sell, sells, and/or imports for sale infringing printing systems in the United States and in this judicial district, including but not limited to products capable of color printing on dark textiles such as the NeoFlex and FlexiJet printers.

9. On information and belief, Anajet is a California corporation with a place of business at 3050 Red Hill Ave, Costa Mesa, California 92626. On information and belief, Anajet makes, uses, offers to sell, sells, and/or imports for sale infringing printing systems in the United States and in this judicial district, including but not limited to products capable of color printing on dark textiles such as the AnaJet Digital Garment printer.

10. On information and belief, Belquette is a Florida corporation with a place of business at 4400 34th St. N #J, Saint Petersburg, Florida 33714. On information and belief, Belquette makes, uses, offers to sell, sells, and/or imports for sale infringing printing systems in the United States and in this judicial district, including but not limited to products capable of color printing on dark textiles such as the FlexiJet and Mod-1 printer.

11. On information and belief, Brother is a New Jersey corporation with a place of business at 100 Somerset Corporate Blvd., Bridgewater, New Jersey 08807. On information and belief, Brother has an office in this judicial district at 26250 Enterprise Court, Ste. 250, Lake Forest, CA 92630. On information and belief, Brother

makes, uses, offers to sell, sells, and/or imports for sale infringing printing systems in the United States and in this judicial district, including but not limited to products capable of color printing on dark textiles such as the GT-782 printers.

12. On information and belief, eXpand is a Georgia limited liability company with a place of business at 11985 Williams Club Pl., Roswell, Georgia 30075. On information and belief, eXpand makes, uses, offers to sell, sells, and/or imports for sale infringing printing systems in the United States and in this judicial district, including but not limited to products capable of color printing on dark textiles such as the MS Zero, MS One, MS Two, Kodi-Jet 603 and Kodi-Jet 701 printers.

13. On information and belief, International Decorating is a California limited liability company with a place of business at 2998 Oakes Dr., Hayward, California 94542. On information and belief, International Decorating makes, uses, offers to sell, sells, and/or imports for sale infringing printing systems in the United States and in this judicial district, including but not limited to products capable of color printing on dark textiles such as the Dream Jet 800 printer.

14. On information and belief, IMG is a Delaware limited liability company with a place of business at 3315 East Miraloma Ave. Suite 117 Anaheim, CA 92806. On information and belief, IMG makes, uses, offers to sell, sells, and/or imports for sale infringing printing systems in the United States and in this judicial district, including but not limited to products capable of color printing on dark textiles such as the FreeJet and TexJet printers.

15. On information and belief, M&R is an Illinois corporation with a place of business at 1N 372 Main St., Glen Ellyn, Illinois 60137. On information and belief, M&R has dealers selling its textile printing systems in this judicial district in Anaheim, Garden Grove, and Los Angeles, California. On information and belief, M&R makes, uses, offers to sell, sells, and/or imports for sale infringing printing systems in the United States and in this judicial district, including but not limited to products capable of color printing on dark textiles such as the i-Dot printer.

16. On information and belief, Melco is a Colorado corporation with a place of business at 1575 West 124th Ave., Denver, Colorado 80234. On information and belief, Melco has offices in this judicial district at 818 West Seventh St., Los Angeles, California 90017 and at 2444 W. 205th St., Suite 2, Torrance, California 90501. On information and belief, Melco makes, uses, offers to sell, sells, and/or imports for sale infringing printing systems in the United States and in this judicial district, including but not limited to products capable of color printing on dark textiles such as the Melco Jet printer.

17. On information and belief, MESA is a Texas corporation with a place of business at 3134 Marquita Dr., Fort Worth, Texas 76116. On information and belief, MESA has an office in this judicial district at 177 West Orangethorpe Ave., Placentia, California. On information and belief, MESA makes, uses, offers to sell, sells, and/or imports for sale infringing printing systems in the United States and in this judicial district, including but not limited to products capable of color printing on dark textiles such as the Viper, HM1, and Kiosk printers.

18. On information and belief, MS Printing is a Massachusetts corporation with a place of business at 699A Tarkiln Hill Rd., New Bedford, Massachusetts 02745. On information and belief, MS Printing makes, uses, offers to sell, sells, and/or imports for sale infringing printing systems in the United States and in this judicial district, including but not limited to products capable of color printing on dark textiles such as the MS Zero, MS One, and MS Two printers.

19. On information and belief, OmniPrint is a Nevada corporation with a place of business at 1720 E. Garry Ave., Suite 111, Santa Ana, California 92705. On information and belief, OmniPrint makes, uses, offers to sell, sells, and/or imports for sale infringing printing systems in the United States and in this judicial district, including but not limited to products capable of color printing on dark textiles such as the FreeJet and TexJet printers.

CAUSE OF ACTION

(Patent Infringement)

20. Kornit incorporates the allegations of paragraphs 1-19.

21. Kornit is the owner by assignment of all right, title and interest in and to U.S. Patent No. 7,134,749 ("'749 Patent"), entitled "Method for Image Printing on a Dark Textile Piece," which issued November 14, 2006. A true and correct copy is attached to this complaint as Exhibit A.

22. As the owner of the '749 Patent, Kornit has the right to sue for past and present infringement and to prevent future infringement.

23. Based on an analysis of All American's products capable of color printing on dark textiles and on information and belief, All American has infringed and continues to infringe, at least one claim of the '749 Patent in the United States through unauthorized manufacture, use, sale, offering for sale and/or importing to sale into the United States of products capable of color printing on dark textile such as the NeoFlex and FlexiJet printers.

24. On information and belief, All American's acts complained of herein have been performed while All American possessed actual knowledge of the '749 Patent. Specifically, Kornit contacted All American regarding the '749 Patent, including a letter dated December 2, 2008 and a telephone conversation on December 5, 2008. All American acknowledged receipt of one or more of these communications regarding the '749 Patent.

25. Based on an analysis of Anajet's products capable of color printing on dark textiles and on information and belief, Anajet has infringed and continues to infringe, at least one claim of the '749 Patent in the United States through unauthorized manufacture, use, sale, offering for sale and/or importing to sale into the United States of products capable of color printing on dark textile such as the AnaJet Digital Garment Printer.

26. On information and belief, Anajet's acts complained of herein have been performed while Anajet possessed actual knowledge of the '749 Patent. Specifically, Kornit contacted Anajet regarding the '749 Patent, including at least letters dated November 12, 2008 and December 2, 2008. Anajet acknowledged receipt of one or more of these communications regarding the '749 Patent.

27. Based on an analysis of Belquette's products capable of color printing on dark textiles and on information and belief, Belquette has infringed and continues to infringe, at least one claim of the '749 Patent in the United States through unauthorized manufacture, use, sale, offering for sale and/or importing to sale into the United States of products capable of color printing on dark textile such as the FlexiJet and Mod-1 printers.

28. On information and belief, Belquette's acts complained of herein have been performed while Belquette possessed actual knowledge of the '749 Patent. Specifically, Kornit contacted Belquette regarding the '749 Patent, including a letter dated November 18, 2008 and telephone conversations on December 17, 2008 and January 5, 2009. Belquette acknowledged receipt of one or more of these communications regarding the '749 Patent.

29. Based on an analysis of Brother's products capable of color printing on dark textiles and on information and belief, Brother has infringed and continues to infringe, at least one claim of the '749 Patent in the United States through unauthorized manufacture, use, sale, offering for sale and/or importing to sale into the United States of products capable of color printing on dark textile such as the GT-782 printer.

30. On information and belief, Brother's acts complained of herein have been performed while Brother possessed actual knowledge of the '749 Patent. Specifically, Kornit contacted Brother regarding the '749 Patent, including at least letters dated November 6, 2008, and electronic mail correspondence on November 13, 2008 and January 5, 2009. Brother acknowledged receipt of one or more of these communications regarding the '749 Patent.

31. Based on an analysis of eXpand's products capable of color printing on dark textiles and on information and belief, eXpand has infringed and continues to infringe, at least one claim of the '749 Patent in the United States through unauthorized manufacture, use, sale, offering for sale and/or importing to sale into the United States of products capable of color printing on dark textile such as the Kodijet printers.

32. On information and belief, eXpand's acts complained of herein have been performed while eXpand possessed actual knowledge of the '749 Patent. Specifically, Kornit contacted eXpand regarding the '749 Patent, including a letter dated February 2, 2009. eXpand acknowledged receipt of this communication regarding the '749 Patent.

33. Based on an analysis of International Decorating's products capable of color printing on dark textiles and on information and belief, International Decorating has infringed and continues to infringe, at least one claim of the '749 Patent in the United States through unauthorized manufacture, use, sale, offering for sale and/or importing to sale into the United States of products capable of color printing on dark textile such as the Dream Jet 800 printer.

34. On information and belief, International Decorating's acts complained of herein have been performed while International Decorating possessed actual knowledge of the '749 Patent. Specifically, Kornit contacted International Decorating regarding the '749 Patent, including a letter dated February 2, 2009 and a voicemail message on February 18, 2009.

35. Based on an analysis of IMG's products capable of color printing on dark textiles and on information and belief, International Decorating has infringed and continues to infringe, at least one claim of the '749 Patent in the United States through unauthorized manufacture, use, sale, offering for sale and/or importing to sale into the United States of products capable of color printing on dark textile such as the FreeJet and TexJet printers.

36. Based on an analysis of M&R's products capable of color printing on dark textiles and on information and belief, M&R has infringed and continues to infringe, at

least one claim of the '749 Patent in the United States through unauthorized manufacture, use, sale, offering for sale and/or importing to sale into the United States of products capable of color printing on dark textile such as the i-Dot printer.

37. On information and belief, M&R's acts complained of herein have been performed while M&R possessed actual knowledge of the '749 Patent. Specifically, Kornit contacted M&R regarding the '749 Patent, including at least letters dated February 2, 2009, February 18, 2009, and a telephone conversation on March 6, 2009. M&R acknowledged receipt of one or more of these communications regarding the '749 Patent.

38. Based on an analysis of Melco's products capable of color printing on dark textiles and on information and belief, Melco has infringed and continues to infringe, at least one claim of the '749 Patent in the United States through unauthorized manufacture, use, sale, offering for sale and/or importing to sale into the United States of products capable of color printing on dark textile such as the Melco Jet printer.

39. On information and belief, Melco's acts complained of herein have been performed while Melco possessed actual knowledge of the '749 Patent. Specifically, Kornit contacted Melco regarding the '749 Patent, including a letter dated November 24, 2008. Melco acknowledged receipt of this communication regarding the '749 Patent.

40. Based on an analysis of MESA's products capable of color printing on dark textiles and on information and belief, MESA has infringed and continues to infringe, at least one claim of the '749 Patent in the United States through unauthorized manufacture, use, sale, offering for sale and/or importing to sale into the United States of products capable of color printing on dark textile such as the Viper, HM1, and Kiosk printers.

41. On information and belief, MESA's acts complained of herein have been performed while MESA possessed actual knowledge of the '749 Patent. Specifically, Kornit contacted MESA regarding the '749 Patent, including at least a letter dated

February 2, 2009 and electronic mail correspondence on March 8, 2009. MESA acknowledged receipt of one or more of these communications regarding the '749 Patent.

42. Based on an analysis of MS Printing's products capable of color printing on dark textiles and on information and belief, MS Printing has infringed and continues to infringe, at least one claim of the '749 Patent in the United States through unauthorized manufacture, use, sale, offering for sale and/or importing to sale into the United States of products capable of color printing on dark textile such as the MS Zero, MS One, and MS Two printers.

43. On information and belief, MS Printing's acts complained of herein have been performed while MS Printing possessed actual knowledge of the '749 Patent. Specifically, Kornit contacted MS Printing regarding the '749 Patent, including at least a letter dated February 2, 2009, a telephone conversation and electronic mail correspondence on February 26, 2009. MS Printing acknowledged receipt of one or more of these communications regarding the '749 Patent.

44. Based on an analysis of OmniPrint's products capable of color printing on dark textiles and on information and belief, OmniPrint has infringed and continues to infringe, at least one claim of the '749 Patent in the United States through unauthorized manufacture, use, sale, offering for sale and/or importing to sale into the United States of products capable of color printing on dark textile such as the FreeJet and TexJet printers.

45. On information and belief, OmniPrint's acts complained of herein have been performed while OmniPrint possessed actual knowledge of the '749 Patent. Specifically, Kornit contacted OmniPrint regarding the '749 Patent, including a letter dated February 2, 2009 and a voice message on February 18, 2009.

46. Defendants' infringement of Kornit's exclusive right under the '749 patent is injuring and will continue to injure Kornit, causing irreparable harm for which there

is no adequate remedy at law. Defendants' infringement will continue unless enjoined by this Court.

47. Kornit is entitled to recover damages from Defendants adequate to compensate for infringement of the '749 patent.

48. On information and belief, excepting Defendant IMG, Defendants were notified in writing of their respective infringing conduct. Defendants' infringement of the '749 patent was and has been at all relevant times willful and deliberate and with actual knowledge of the '749 patent.

49. On information and belief, to the extent any marking was required by 35 U.S.C. § 287, such requirements have been met and Kornit is entitled to recover damages for infringement occurring prior to the filing of this action in an amount to be proven at trial.

PRAYER FOR RELIEF

WHEREFORE, Kornit requests judgment:

1. Adjudging and decreeing that Defendants have been and are currently infringing the '749 patent.

2. Preliminary and permanently enjoining Defendants, their officers, agents, servants, employees, subsidiaries, and attorneys and all those in active concert or participation with them, including related individuals and entities, customers, representatives, dealers, and distributors from further infringing, inducing, and contributing to the infringement of the '749 Patent;

3. Awarding Kornit actual damages to compensate it for each of the unlawful actions set forth in Kornit's complaint;

4. Awarding Kornit interest;

5. Awarding Kornit enhanced damages under 35 U.S.C. § 284;

6. Awarding attorney fees under 35 U.S.C. § 285 or otherwise permitted by law;

7. Awarding Kornit costs of suit; and

8. Awarding Kornit such other and further relief as the Court may deem just and proper.

DEMAND FOR JURY TRIAL

Pursuant to Federal Rules of Civil Procedure 38, Plaintiff, Kornit, hereby demands trial by jury in this action of all issues triable by jury.

Dated: June 10, 2009

HOWREY LLP

By: _____

Russell B. Hill
Michael J. Stimson
Jesse D. Mulholland
Michael C. Chou
Attorneys for Plaintiff
Kornit Digital Ltd.

Exhibit A

US007134749B2

(12) **United States Patent**
Ben-Zur et al.

(10) **Patent No.: US 7,134,749 B2**
(45) **Date of Patent: Nov. 14, 2006**

(54) **METHOD FOR IMAGE PRINTING ON A DARK TEXTILE PIECE**

(75) Inventors: **Ofer Ben-Zur**, Raanana (IL); **Yossef Pearl**, Tel-Aviv (IL)

(73) Assignee: **Kornit Digital Ltd.**, Moshav Magshimim (IL)

(*) Notice: Subject to any disclaimer, the term of this patent is extended or adjusted under 35 U.S.C. 154(b) by 3 days.

(21) Appl. No.: **10/461,414**

(22) Filed: **Jun. 16, 2003**

(65) **Prior Publication Data**

US 2004/0252173 A1 Dec. 16, 2004

(51) **Int. Cl.**
B41J 2/01 (2006.01)

(52) **U.S. Cl.** **347/101**; 347/100

(58) **Field of Classification Search** 347/101, 347/100, 43, 105, 96, 98, 102, 95; 428/195, 428/32.1; 156/1; 427/1; 106/31.6, 31.13, 106/31.27; 523/160
See application file for complete search history.

(56) **References Cited**

U.S. PATENT DOCUMENTS

4,021,591	A	5/1977	DeVries et al.	
4,630,076	A *	12/1986	Yoshimura	347/43
4,702,742	A *	10/1987	Iwata et al.	347/101
5,501,902	A	3/1996	Kronzer	
5,510,415	A	4/1996	Zahrobsky et al.	
5,798,179	A	8/1998	Kronzer	
6,087,061	A	7/2000	Hare et al.	
6,126,281	A *	10/2000	Shimoda et al.	347/101
6,267,518	B1	7/2001	Abe	
6,513,924	B1 *	2/2003	Goldberg et al.	347/102
2002/0060728	A1 *	5/2002	Koizumi et al.	347/101
2003/0157304	A1 *	8/2003	Li et al.	428/195

FOREIGN PATENT DOCUMENTS

GB	422488	1/1935
WO	9830749	7/1998
WO	9956948	11/1999
WO	0073570	12/2000
WO	0117792	3/2001
WO	0132974	5/2001
WO	02066565	8/2002

* cited by examiner

Primary Examiner—Manish S. Shah

(57) **ABSTRACT**

A method and apparatus for color printing on a dark textile piece, the method including the steps of digitally applying a white ink layer directly onto a textile piece, optionally curing the white ink layer, and digitally printing a colored image on said ink layer.

7 Claims, 8 Drawing Sheets

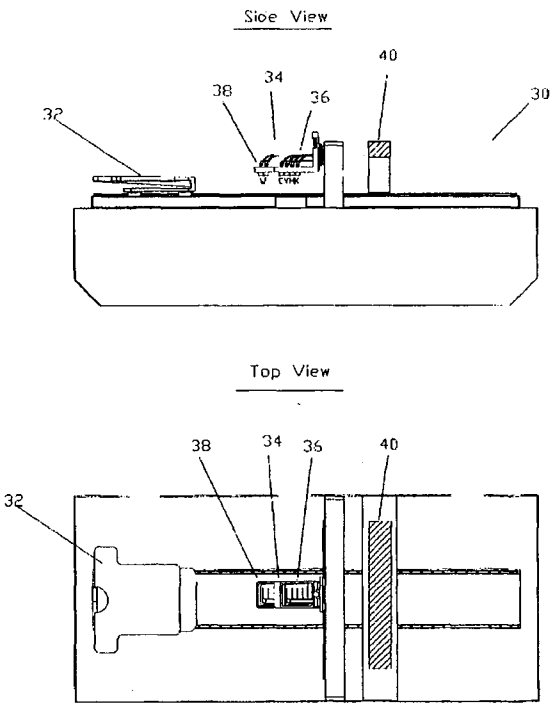

FIG. 1

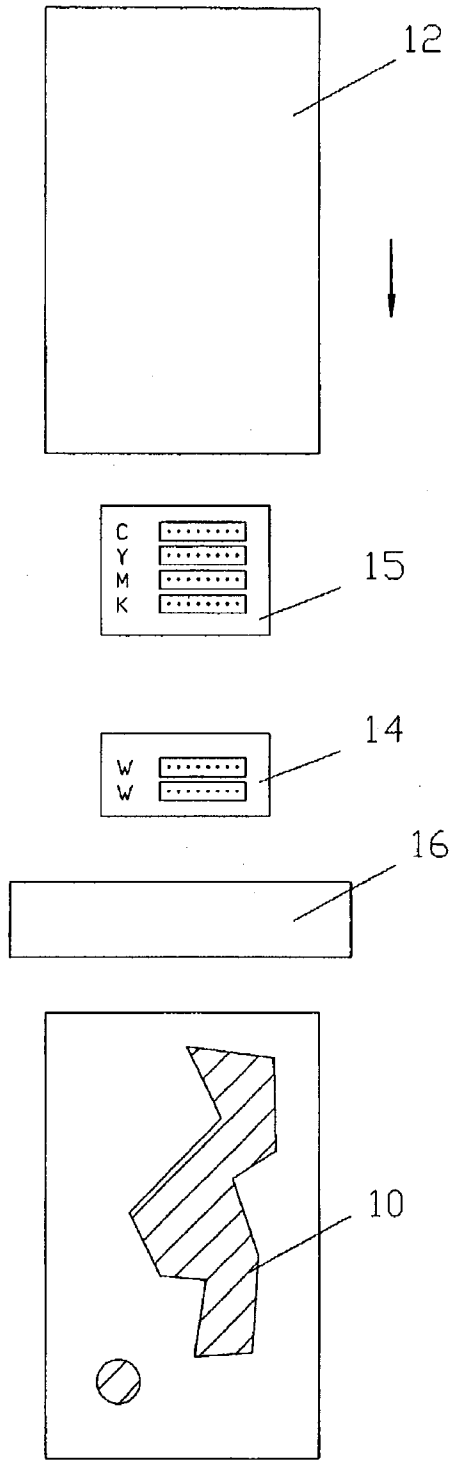

FIG. 2

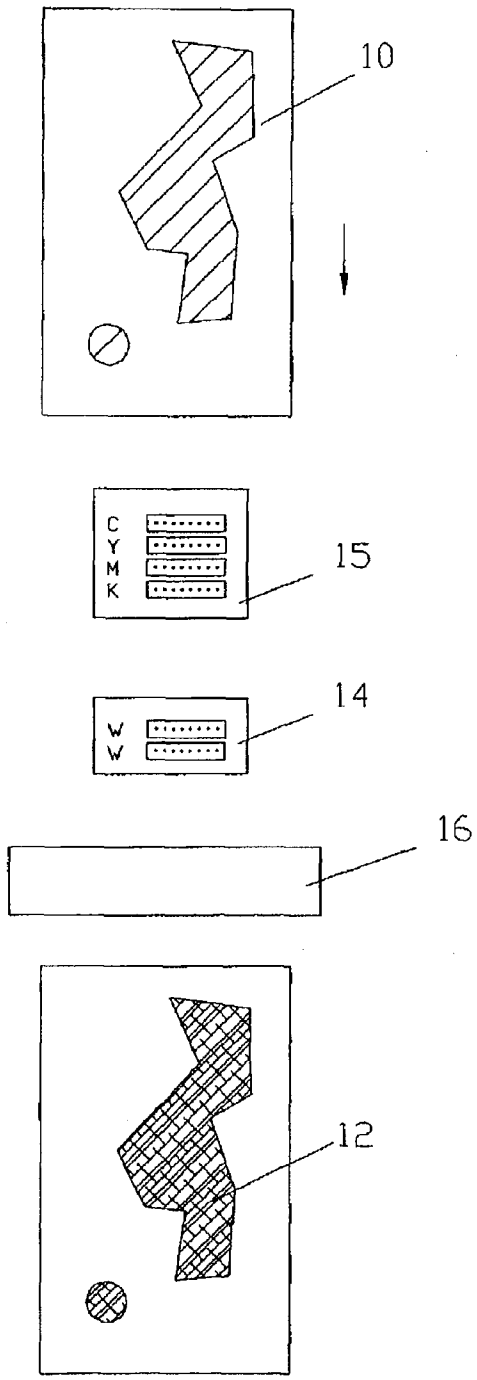

FIG. 3

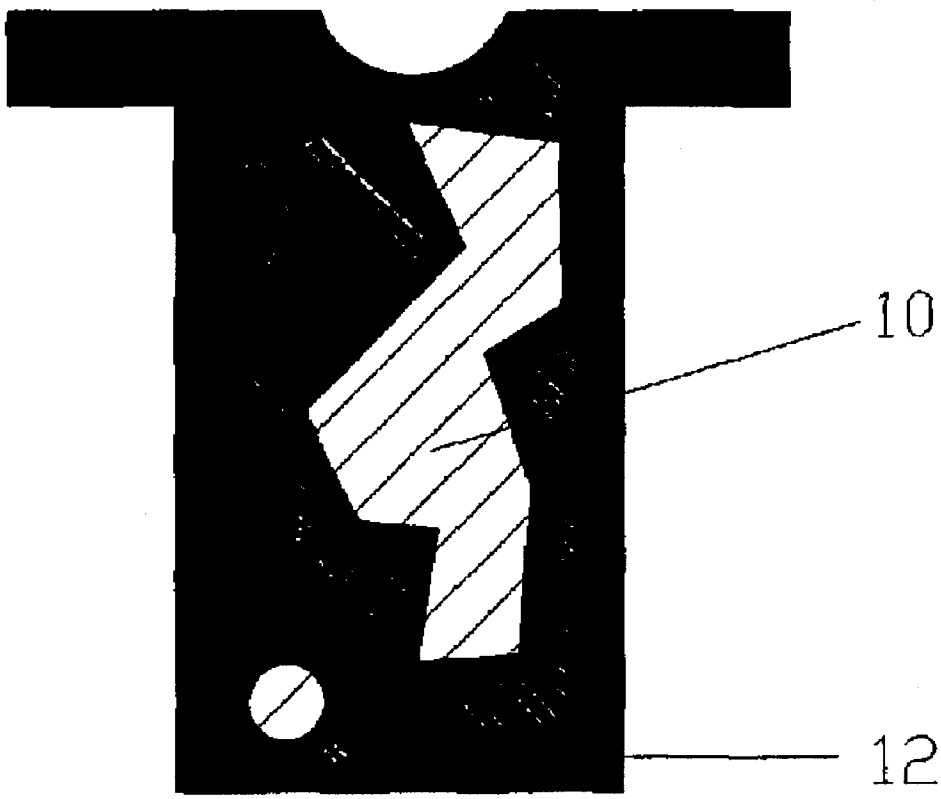

Fig. 4

Side View

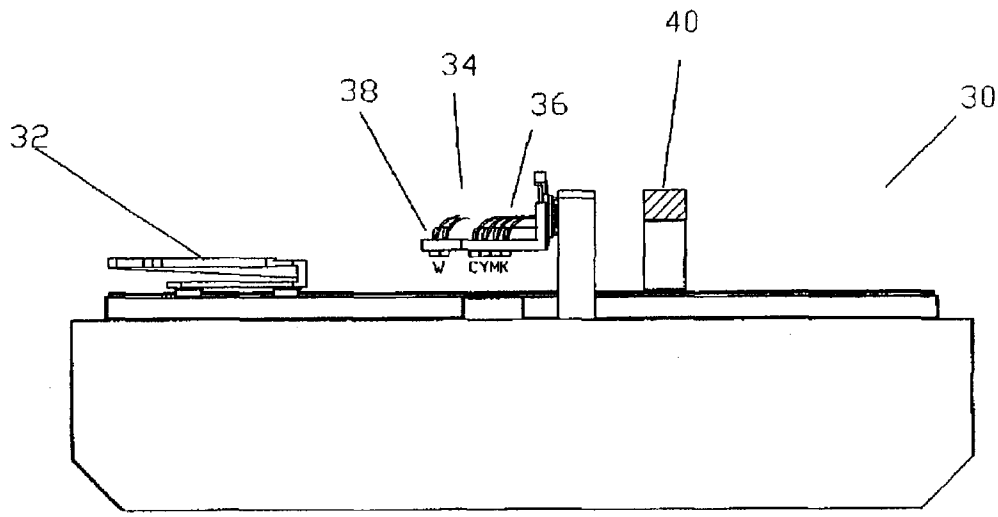

Top View

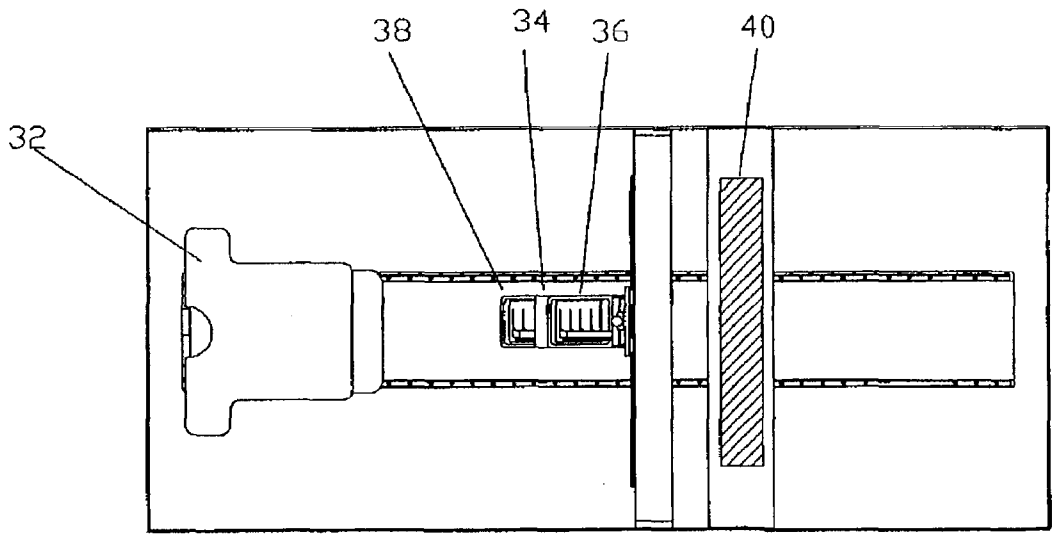

FIG. 5

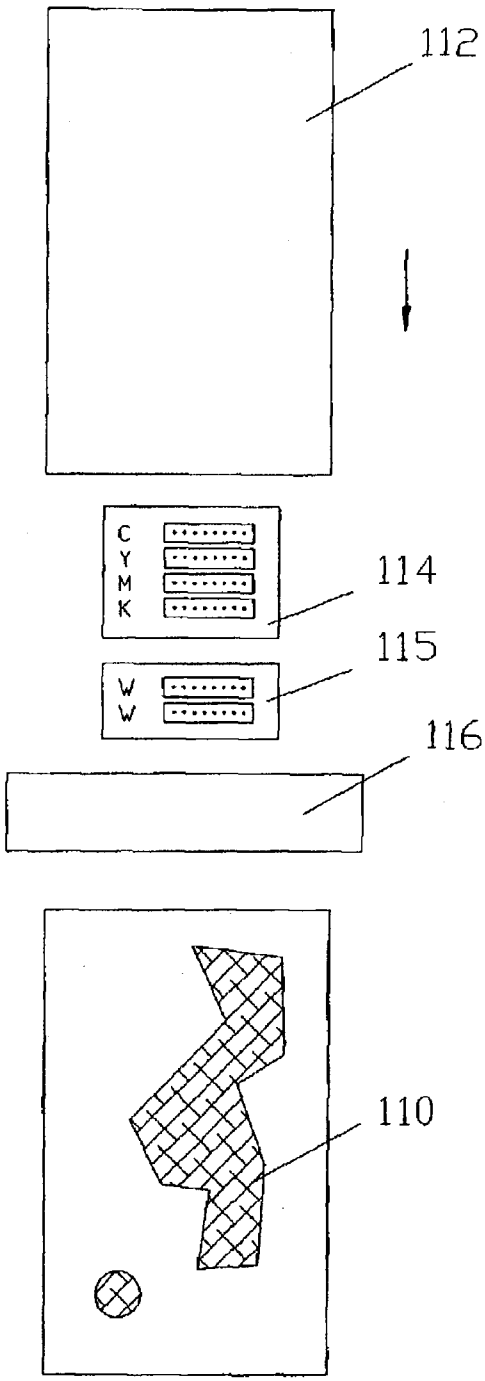

FIG. 6

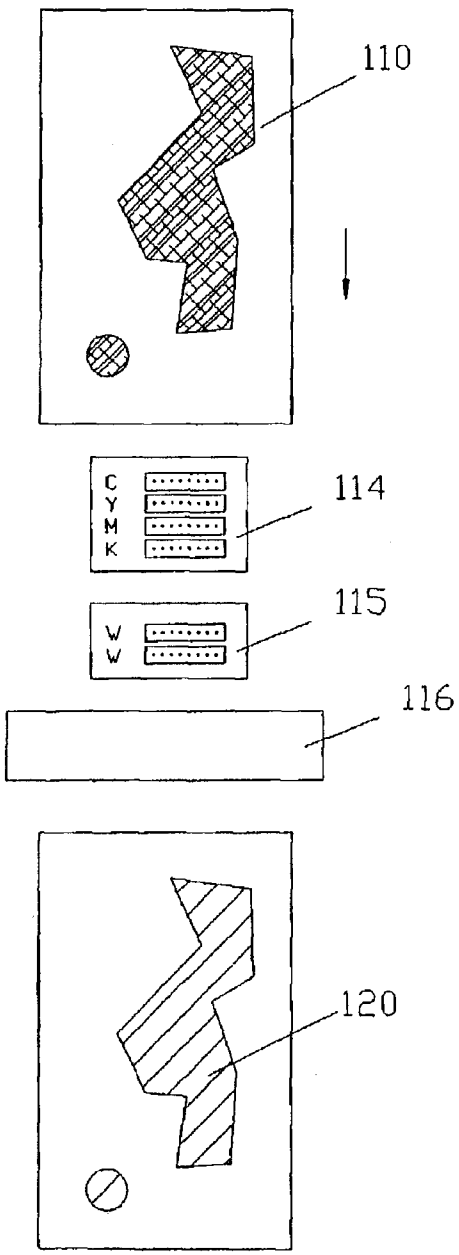

FIG. 7

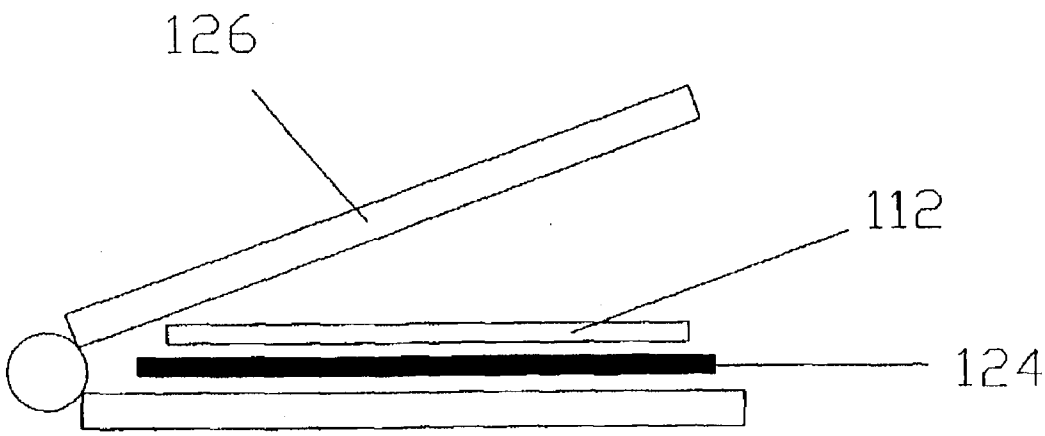

FIG. 8

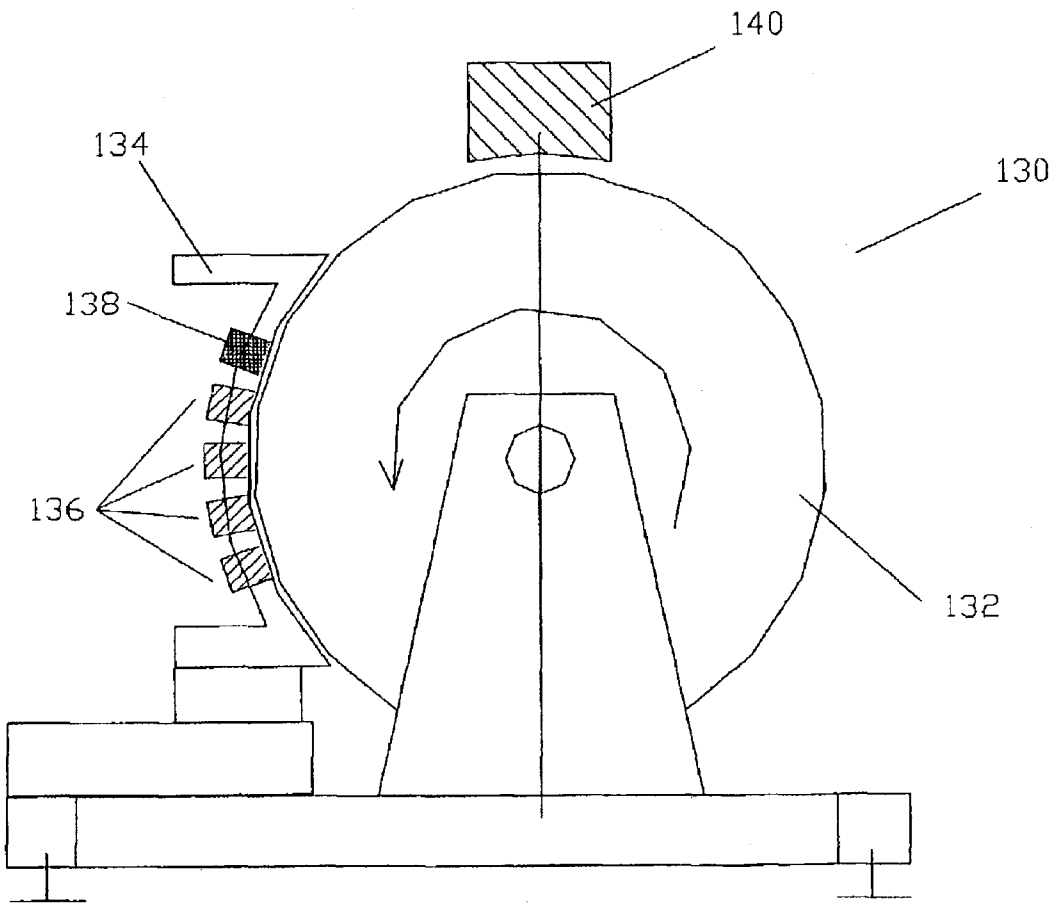

METHOD FOR IMAGE PRINTING ON A DARK TEXTILE PIECE

FIELD OF THE INVENTION

This invention describes a system and method for printing digital images on textile pieces, and in particular, to an inkjet method for printing digital images on dark and colored textile pieces.

BACKGROUND OF THE INVENTION

Inkjet printing on textile pieces is well known. In the direct printing method, the "construction" of the image is achieved by placing ink drops on the textile at different adjacent sites as discreet, physically non-mixed drops. In the transfer method, the colored image is first applied on the transfer media (paper that has very low affinity to the ink). The colored image is dried and then transferred to the textile piece, as by various heat transfer processes. This printing method is satisfactory for printing on light colored textile pieces. The human eye includes cells, called cones, which are sensitive to light of a particular range of wavelengths, and respond to blue light, green light and red light. All other colors we see are combinations of these three colors.

In imaging systems, colors can be mixed in different ways to produce a desired result for the eye. The mixing method commonly used in printing is known as subtractive primary colors model. In the subtractive color mixing process, colors are mixed, for example, from the primary colors cyan, magenta and yellow, using a process of subtraction or filtering. The color perceived is not generated directly by the object we observe, but rather the color seen is the result of the surrounding light being reflected off the printed ink surface, or transmitted to the substrate surface and reflected back to the viewer through the ink. The ink absorbs some, but not all of the light wavelengths, reflecting or allowing transmission of the rest. As a result, the ink film serves as a filter that selectively subtracts certain colors.

Opaque inks reflect light wavelengths, while transparent inks transmit light wavelengths to the substrate. Therefore, when using transparent inks, the substrate color is usually opaque white, or at least light. In that case, the viewer receives the reflected light from the substrate. For example, if a white substrate is painted with blue transparent ink, the ink layer absorbs the ambient light, allowing only the blue light to be transmitted to the substrate. The blue light is then reflected by the opaque white substrate, back through the ink and into the viewer's eyes, and perceive by the viewer as blue color.

However, colored images on colored backgrounds can rarely be distinguished. This is due to the fact that light impinging on the dark textile is not reflected towards the eyes of the viewer. Rather, if the substrate base color is dark, then transmitted light will be absorbed and not reflected by the substrate, and the viewer will not see the light. Thus, printing on a dark garment is not available using digital devices, such as color copiers, ink-jet printers, laser printers and the like.

SUMMARY OF THE INVENTION

There is thus provided, according to the present invention, a method for printing directly on dark textile pieces including the steps of digitally printing a white masking layer onto a dark textile piece, curing the masking layer, and digitally printing an image directly onto same dark textile piece above the masking layer.

According to one embodiment, the digital printing process includes digitally printing a white masking layer by means of an inkjet printer onto a dark textile piece, drying and fixing the image, and digitally printing a colored image by means of an inkjet printer onto a dark textile piece above said masking layer.

Further according to the present invention, there is provided an apparatus for printing directly on a dark textile piece. The device includes a printing table for holding a textile piece, at least one white inkjet head and at least one color inkjet print head, and preferably an array of inkjet print heads including a plurality of color print heads and at least one white inkjet head, disposed above the printing table, and a controller for causing printing of a white colored masking layer on top of the textile piece on the printing table during a first pass, or series of passes, for activating the drying unit to dry the masking layer, and for causing printing of a color image printing on top of the dried masking layer on the printing table during a second pass, or series of passes.

According to one embodiment, the apparatus further includes a drying unit above the printing table.

There is also provided, according to the present invention, a method for printing on dark textile pieces including the steps of digitally printing an image onto transfer paper, applying a white masking layer that covers the image, and transferring by heat transfer the image and masking layer from the transfer paper to a dark textile piece.

According to one embodiment, the step of digitally printing includes digitally printing an image by means of an inkjet printer onto transfer paper, and curing and fixing the image.

According to one embodiment of the invention, the method further includes the step of applying a layer of adhesive onto the masking layer, before the step of transferring.

Further according to the present invention, there is provided an apparatus for printing on a dark textile piece, the device including a rotating drum for holding transfer paper, at least one color inkjet print head and at least one white inkjet print head, and preferably an array of inkjet print heads including a plurality of color print heads and at least one white inkjet head, disposed adjacent the rotating drum, and a controller for causing color image printing on a transfer paper on the drum during a first rotation, or series of rotations, for activating the curing unit to cure the color image, and for causing printing of a white colored masking layer on top of the dried color image on the transfer paper on the drum during a second rotation, or series of rotations.

According to one embodiment, the apparatus further includes a drying unit disposed adjacent the drum.

Preferably, the apparatus further includes a heat transfer unit for transferring the color image and masking layer from the transfer paper onto a dark textile piece.

BRIEF DESCRIPTION OF THE DRAWINGS

The present invention will be further understood and appreciated from the following detailed description taken in conjunction with the drawings in which:

FIG. **1** is a schematic illustration of the image printing process according to one embodiment of the invention;

FIG. **2** is a schematic illustration of the masking layer printing process according to one embodiment of the invention;

FIG. **3** is an illustration of a dark textile piece after image printing;

FIG. **4** is a schematic illustration of a apparatus for direct inkjet printing on a dark textile piece constructed and operative in accordance with one embodiment of the present invention;

FIG. **5** is a schematic illustration of the image printing process according to an alternative embodiment of the invention;

FIG. **6** is a schematic illustration of the masking layer printing process according to one embodiment of the invention;

FIG. **7** is a schematic illustration of the heat transfer process according to one embodiment of the invention,

FIG. **8** is a schematic illustration of an apparatus for inkjet printing on a dark textile piece, constructed and operative in accordance with an alternative embodiment of the present invention.

DETAILED DESCRIPTION OF THE INVENTION

The present invention relates to a method and apparatus for textile digital ink printing for image application on a dark or colored textile piece. In particular, the invention relates to direct image application on a dark textile piece, as well as to textile digital ink printing for transfer image application on a dark textile piece. In this invention, the emphasis is on dark textile print, because printing on light colored fabric is a much simpler task.

Referring now to FIG. **1**, there is shown a schematic illustration of the image printing process according to one embodiment of the invention, for printing an image directly onto the textile piece **12**. The process begins by printing, by means of at least one white inkjet head, here illustrated as an array of inkjet heads **14** with white ink, a layer of white opaque ink that covers the designed image area, to form a masking layer **10**. During the printing process, the white masking layer **10** is preferably cured and fixed by a curing unit **16**, to prevent its dissolution with the next image layer. This can be accomplished in any conventional manner, such as UV curing lamp, IR, hot air, etc., depending on the specific ink type and application. The masking layer is then over printed, by means of at least one color inkjet head, here shown as a second array of inkjet heads **15** with colored ink, in a second printing process, shown schematically in FIG. **2**, with the desired color image. It will be appreciated that the image may be all of a single color, or a many colors. In a case where curing is performed immediately (like UV curing or hot melt solidification), the procedure can be carried out in a single printing process, as color inkjet heads array **15** fires ink drops just after white inkjet heads array **14** has left a cured masking layer on the substrate.

Preferably, the white ink is placed exactly on the designed image area, in order to cover it completely, but not to exceed it. For the white layer only, "bleeding" in between the adjacent drops is not an issue, therefore the ink may be applied in a dense manner to assure good coverage. Printing resolution of the white ink can be lower than the resolution of the process colors, and the drop size can be larger, to reduce printing time. As has been previously explained, the white ink preferably is placed on the textile by means of an array of white printing heads **14**. Preferably, a controller (not shown) controls both the process color printing heads and the white printing heads, so as to coordinate the printing and ensure precise coverage of the entire image, but not more.

The "construction" of the image is achieved by placing ink drops at different adjacent sites as discreet, physically non-mixed drops. In the illustrated embodiment, the image is printed by an array of printing heads **15**. For example, the image is printed with subtractive primary colors: Cyan, Yellow, Magenta, and Black (CYMK), using transparent ink. The white opaque color layer now reflects all light that is transmitted through the image ink layers, and the viewer can observe the image **12** as if it had been printed on a white color garment, as illustrated in FIG. **3**.

There are several types of inks that can be utilized in this invention. In order to suit inkjet applications, the ink should posses the following characteristics:

1. The viscosity profile must provide the highest temperature and response to shear sensitivity, i.e. the ink will be as viscous as possible at ambient temperatures (but not too viscous for the circulation system and filters) and about 8–18 cp (as required by OEM Drop On Demand (DOD) print head jetting conditions (temperature, shear stress)). The high viscosity at ambient temperature ensures also shelf stability, while the low viscosity is recommended for reliable print-head operation.
2. The surface tension at jetting should be about 28–32 dyn/cm^2 (as required by OEM DOD print heads).
3. The ink will neither react while inside the print head nor dry on the orifice plate, to prevent clogging.
4. On media: The ink should not bleed or feather after application, to ensure a sharp and bright image. This is preferably achieved by fast fixation and/or short curing time, so as not to delay application of subsequent layers, and to prevent bleeding of the colors into each other or the masking layer.
5. The ink should have low shrinkage after application and curing.
6. The image layer should have strong adhesion to the media.

Useful ink types are categorized according to their curing mechanism:

UV and/or Visible light curing: the dry image layer is formed immediately as a result of exposure of the applied ink layer to UV and/or Visible light only.

IR curing: the dry image layer is formed upon exposure of the applied ink layer to IR radiation only.

Thermal/heat curing: the dry image layer is formed as a result of a relatively fast chemical reaction on the media between the applied ink's components at elevated temperatures only.

Air/heat-drying: the dry image layer is formed due to solvents and/or water evaporation. The evaporation takes place at ambient temperature, and can be accelerated at higher temperatures.

Air/moisture curing: the dry image is formed as a result of a chemical reaction of the applied ink with air moisture.

Solidification: the solid ink is melted at elevated temperatures and immediately forms a solid layer after it solidifies again at ambient temperature.

Room temperature chemical curing: the dry image layer is formed due to a relatively slow chemical reaction between the applied ink's components at room temperature, and or a fast chemical reaction at higher temperatures.

FIG. **4** is a schematic illustration of an apparatus **30** for direct ink-jet printing on a dark textile piece, constructed and operative in accordance with one embodiment of the present invention. Apparatus **30** includes a printing table **32** for holding a textile piece, and an array of inkjet print heads **34** disposed above the printing table. The print heads include a plurality of color print heads **36** and one or more white inkjet heads **38**. (Alternatively, a single color inkjet print head and a single white inkjet print head could be utilized.) Preferably, a curing unit **40** is also disposed above the printing table, for

curing ink deposited by the inkjet printing heads on a textile piece on the table, although, alternatively, the ink could be allowed to dry and cure by itself with time. A controller **42** (not shown) is coupled to the apparatus **30** for causing printing of a white colored masking layer on a textile piece on the printing table during a first pass, or series of passes, for activating the curing unit to cure the color image, and for causing printing of a color image on top of the cured masking layer on the textile piece on the table during a second pass, or series of passes.

Referring now to FIG. **5**, there is shown a schematic illustration of the image printing process according to an alternative embodiment of the invention, including an image transfer process. The process begins by printing a desired color image **110** onto a transfer media **112** (paper that has very low affinity to the ink). The "construction" of the image is achieved by placing ink drops at different adjacent sites as discreet, physically non-mixed drops. The ink composition used must prevent the drops from "bleeding" on the applied media. In the illustrated embodiment, the image is printed by an array of color printing heads **114**. The image is printed using subtractive primary colors: Cyan, Yellow, Magenta, and Black (CYMK), for example, using transparent ink.

During the printing process, the colored image is cured and fixed by a curing unit **116** to prevent its dissolution with the next masking layer. This can be accomplished in any conventional manner, such as UV curing lamp, IR, hot air, etc., depending on the specific ink type and application. The image is then over printed by white inkjet heads array **115**, in a second printing process shown schematically in FIG. **6**, with white opaque ink that covers the image area, to form a masking layer **120**.

In a case where curing is performed immediately (like UV curing or hot melt solidification), the procedure can be carried out in a single printing process, as white inkjet heads array **115** fires white ink drops just after colored inkjet heads array **114** has left a colored image on the substrate.

Preferably, the white ink is placed exactly on the image area, in order to cover it completely, but not to exceed it. For the white layer only, "bleeding" in between the adjacent drops is not an issue, therefore the ink may be applied in a dense manner to assure good coverage. Printing resolution of the white ink can be lower than the resolution of the process colors, and the drop size can be larger to reduce printing time. The white ink is placed on the image by means of an array of white printing heads **115**. Preferably, both the process color printing heads and the white printing heads are controlled by a controller (not shown), so as to coordinate the printing and ensure precise coverage of the entire image, and no more.

As shown schematically in FIG. **7**, the printed transfer paper **112** is now placed on a textile piece **124** in a heat transfer apparatus **126**. When the transfer paper is heat pressed against the textile substrate, as known, the white color is transferred onto the textile piece, with the image as the outer layer. The white opaque color layer now reflects all light that is transmitted through the image ink layers, and the viewer can observe the image **110**, as illustrated in FIG. **3**, as if it had been printed on a white color garment.

It is a particular feature of the invention that this process allows indirect inkjet printing on a substrate of any base color, although the printing process is longer and requires more inkjet nozzles for the white color ink than conventional printing on a light color background. In order to assure durability of the printed image on the textile substrate, a pressure sensitive adhesive is preferably added. Otherwise, the image might be removed during washing, ironing, etc. There are several options for adding the adhesive:

Method 1

A third layer is added above the white masking layer, this layer being of textile pressure sensitive thermally cured adhesive. The adhesive layer covers the two previous layers completely. The adhesive layer is a pressure sensitive one, cured thermally during heat transfer of the image onto the textile piece. The adhesive layer is preferably applied by an inkjet head or by another device, as known in the trade.

Method 2

The adhesive is a part of a binder in the white masking ink formulation. The printed masking layer, itself, therefore performs as the third layer described in Method 1. Other adhesives can be introduced in the white masking ink formulation described in Method 2.

Examples of commercial adhesives suppliers:

1) BOSTIC Inc.—Their Supergrip® reactive hot melts offer a unique combination of hot melt processing and handling with the advantages of a reactive thermosetting, solvent free adhesive, that offer rapid fixing at relatively low temperatures. These adhesives are suitable for Method 1.
2) Clifton Adhesives Inc. offers solution/mixed adhesives based on various rubbers (Neoprene™, Hypalon™, polyester, vinyl, SBR, nitrile, urethane and ethyl vinyl acetate adhesives). These products are easily incorporated into water and solvent based inks, to serve as pressure sensitive adhesives. These adhesives are suitable for use in Method 2.

Referring now to FIG. **8**, there is shown a schematic illustration of an apparatus **130** for inkjet printing on a dark textile piece constructed and operative in accordance with one embodiment of the present invention. Apparatus **130** includes a rotating drum **132** for holding transfer paper, and an array of inkjet print heads **134** disposed adjacent the rotating drum. The print heads include a plurality of color print heads **136** and at least one white ink-jet head **138**. (Alternatively, a single color print head and a single white ink-jet print head could be utilized.) If required by the selected ink, a curing unit **140** may also be disposed adjacent the drum, for curing ink deposited by the ink-jet printing heads on transfer paper on the drum. A controller **142** (not shown) is coupled to the apparatus **130** for causing color image printing on a transfer paper on the drum during a first rotation, or series of rotations, for activating the curing unit to cure the color image, and for causing printing of a white colored masking layer on top of the dried color image on the transfer paper on the drum during a second rotation, or series of rotations. Preferably, the apparatus further includes a heat transfer unit for transferring the color image and masking layer from the transfer paper onto a dark textile piece.

It will be appreciated that the invention is not limited to what has been described hereinabove merely by way of example. Rather, the invention is limited solely by the claims that follow.

The invention claimed is:

1. A method for color printing on a dark textile piece comprising the steps of:

digitally printing, by mean of an inkjet printing head, an opaque white ink layer directly onto a dark textile piece; and

digitally printing a colored image on said white ink layer, said digitally printing said white ink layer is performed such that said white ink layer substantially covers, without exceeding, the designed area of said colored

image, and further such that said white ink layer and said colored image are substantially coextensive.

2. The method according to claim **1**, wherein said step of digitally printing said opaque white ink layer further comprises fixing said layer.

3. The method according to claim **1**, further comprising curing said white ink layer before the step of digitally printing said colored image.

4. The method according to claim **3**, wherein said step of digitally printing said colored image includes digitally printing a white ink layer by means of an inkjet printing head directly onto the textile piece, and fixing said layer.

5. An apparatus for printing on a dark textile piece, the apparatus comprising:

a flat bed machine with a printing table for holding the dark textile piece;

at least one white inkjet printing head and at least one color inkjet printing head disposed above the printing table and arranged for printing directly on the dark textile piece; and

a controller for causing said at least one white inkjet printing head to digitally print an opaque white ink layer directly on the dark textile piece on the printing table during a first pass, or series of passes, and for causing said at least one color inkjet printing head to digitally print a colored image on top of the white ink layer on the textile piece on the printing table during a second pass, or series of passes, such that said white ink layer substantially covers, without exceeding, the designed area of said colored image, and further such that said white ink layer and said colored image are substantially coextensive.

6. The apparatus according to claim **5**, further comprising a curing unit associated with said printing table, wherein said controller is also arranged to activate the curing unit to fix at least the white ink layer.

7. The apparatus according to claim **5**, further comprising an array of inkjet printing heads including a plurality of color printing heads and at least one or more white inkjet printing head.

* * * * *

ORIGINAL

UNITED STATES DISTRICT COURT, CENTRAL DISTRICT OF CALIFORNIA

CIVIL COVER SHEET

I (a) PLAINTIFFS (Check box if you are representing yourself ☐)
KORNIT DIGITAL LTD.

DEFENDANTS
ALL AMERICAN MANUFACTURING & SUPPLY COMPANY, et. al.
(See Attachment "A" for remaining Defendants)

(b) Attorneys (Firm Name, Address and Telephone Number. If you are representing yourself, provide same.)
Russell B. Hill, Michael J. Stimson, Jesse D. Mulholland, Michael C. Chou
Howrey LLP
4 Park Plaza, Suite 1700, Irvine, CA 92614 (949) 721-6900

Attorneys (If Known)
See Attachment "A"

II. BASIS OF JURISDICTION (Place an X in one box only.)

☐ 1 U.S. Government Plaintiff ☑ 3 Federal Question (U.S. Government Not a Party)
☐ 2 U.S. Government Defendant ☐ 4 Diversity (Indicate Citizenship of Parties in Item III)

III. CITIZENSHIP OF PRINCIPAL PARTIES - For Diversity Cases Only
(Place an X in one box for plaintiff and one for defendant.)

	PTF	DEF		PTF	DEF
Citizen of This State	☐ 1	☐ 1	Incorporated or Principal Place of Business in this State	☐ 4	☐ 4
Citizen of Another State	☐ 2	☐ 2	Incorporated and Principal Place of Business in Another State	☐ 5	☐ 5
Citizen or Subject of a Foreign Country	☐ 3	☐ 3	Foreign Nation	☐ 6	☐ 6

IV. ORIGIN (Place an X in one box only.)

☑ 1 Original Proceeding ☐ 2 Removed from State Court ☐ 3 Remanded from Appellate Court ☐ 4 Reinstated or Reopened ☐ 5 Transferred from another district (specify): ☐ 6 Multi-District Litigation ☐ 7 Appeal to District Judge from Magistrate Judge

V. REQUESTED IN COMPLAINT: JURY DEMAND: ☑ Yes ☐ No (Check 'Yes' only if demanded in complaint.)

CLASS ACTION under F.R.C.P. 23: ☐ Yes ☒ No ☐ **MONEY DEMANDED IN COMPLAINT: $** To Be Determined

VI. CAUSE OF ACTION (Cite the U.S. Civil Statute under which you are filing and write a brief statement of cause. Do not cite jurisdictional statutes unless diversity.)
Action for patent infringement arising 35 U.S.C. sec. 1 et. seq.

VII. NATURE OF SUIT (Place an X in one box only.)

OTHER STATUTES
☐ 400 State Reapportionment
☐ 410 Antitrust
☐ 430 Banks and Banking
☐ 450 Commerce/ICC Rates/etc.
☐ 460 Deportation
☐ 470 Racketeer Influenced and Corrupt Organizations
☐ 480 Consumer Credit
☐ 490 Cable/Sat TV
☐ 810 Selective Service
☐ 850 Securities/Commodities/ Exchange
☐ 875 Customer Challenge 12 USC 3410
☐ 890 Other Statutory Actions
☐ 891 Agricultural Act
☐ 892 Economic Stabilization Act
☐ 893 Environmental Matters
☐ 894 Energy Allocation Act
☐ 895 Freedom of Info. Act
☐ 900 Appeal of Fee Determination Under Equal Access to Justice
☐ 950 Constitutionality of State Statutes

CONTRACT
☐ 110 Insurance
☐ 120 Marine
☐ 130 Miller Act
☐ 140 Negotiable Instrument
☐ 150 Recovery of Overpayment & Enforcement of Judgment
☐ 151 Medicare Act
☐ 152 Recovery of Defaulted Student Loan (Excl. Veterans)
☐ 153 Recovery of Overpayment of Veteran's Benefits
☐ 160 Stockholders' Suits
☐ 190 Other Contract
☐ 195 Contract Product Liability
☐ 196 Franchise

REAL PROPERTY
☐ 210 Land Condemnation
☐ 220 Foreclosure
☐ 230 Rent Lease & Ejectment
☐ 240 Torts to Land
☐ 245 Tort Product Liability
☐ 290 All Other Real Property

TORTS
PERSONAL INJURY
☐ 310 Airplane
☐ 315 Airplane Product Liability
☐ 320 Assault, Libel & Slander
☐ 330 Fed. Employers' Liability
☐ 340 Marine
☐ 345 Marine Product Liability
☐ 350 Motor Vehicle
☐ 355 Motor Vehicle Product Liability
☐ 360 Other Personal Injury
☐ 362 Personal Injury-Med Malpractice
☐ 365 Personal Injury-Product Liability
☐ 368 Asbestos Personal Injury Product Liability

IMMIGRATION
☐ 462 Naturalization Application
☐ 463 Habeas Corpus-Alien Detainee
☐ 465 Other Immigration Actions

TORTS
PERSONAL PROPERTY
☐ 370 Other Fraud
☐ 371 Truth in Lending
☐ 380 Other Personal Property Damage
☐ 385 Property Damage Product Liability

BANKRUPTCY
☐ 422 Appeal 28 USC 158
☐ 423 Withdrawal 28 USC 157

CIVIL RIGHTS
☐ 441 Voting
☐ 442 Employment
☐ 443 Housing/Accommodations
☐ 444 Welfare
☐ 445 American with Disabilities - Employment
☐ 446 American with Disabilities - Other
☐ 440 Other Civil Rights

PRISONER PETITIONS
☐ 510 Motions to Vacate Sentence Habeas Corpus
☐ 530 General
☐ 535 Death Penalty
☐ 540 Mandamus/ Other
☐ 550 Civil Rights
☐ 555 Prison Condition

FORFEITURE / PENALTY
☐ 610 Agriculture
☐ 620 Other Food & Drug
☐ 625 Drug Related Seizure of Property 21 USC 881
☐ 630 Liquor Laws
☐ 640 R.R. & Truck
☐ 650 Airline Regs
☐ 660 Occupational Safety /Health
☐ 690 Other

LABOR
☐ 710 Fair Labor Standards Act
☐ 720 Labor/Mgmt. Relations
☐ 730 Labor/Mgmt. Reporting & Disclosure Act
☐ 740 Railway Labor Act
☐ 790 Other Labor Litigation
☐ 791 Empl. Ret. Inc. Security Act

PROPERTY RIGHTS
☐ 820 Copyrights
☑ 830 Patent
☐ 840 Trademark

SOCIAL SECURITY
☐ 861 HIA (1395ff)
☐ 862 Black Lung (923)
☐ 863 DIWC/DIWW (405(g))
☐ 864 SSID Title XVI
☐ 865 RSI (405(g))

FEDERAL TAX SUITS
☐ 870 Taxes (U.S. Plaintiff or Defendant)
☐ 871 IRS-Third Party 26 USC 7609

SACV09-0689

FOR OFFICE USE ONLY: Case Number: _____

AFTER COMPLETING THE FRONT SIDE OF FORM CV-71, COMPLETE THE INFORMATION REQUESTED BELOW.

UNITED STATES DISTRICT COURT, CENTRAL DISTRICT OF CALIFORNIA
CIVIL COVER SHEET

VIII(a). IDENTICAL CASES: Has this action been previously filed in this court and dismissed, remanded or closed? ☑ No ☐ Yes
If yes, list case number(s): _____

VIII(b). RELATED CASES: Have any cases been previously filed in this court that are related to the present case? ☑ No ☐ Yes
If yes, list case number(s): _____

Civil cases are deemed related if a previously filed case and the present case:
(Check all boxes that apply) ☐ A. Arise from the same or closely related transactions, happenings, or events; or
☐ B. Call for determination of the same or substantially related or similar questions of law and fact; or
☐ C. For other reasons would entail substantial duplication of labor if heard by different judges; or
☐ D. Involve the same patent, trademark or copyright, and one of the factors identified above in a, b or c also is present.

IX. VENUE: (When completing the following information, use an additional sheet if necessary.)

(a) List the County in this District; California County outside of this District; State if other than California; or Foreign Country, in which **EACH** named plaintiff resides.
☐ Check here if the government, its agencies or employees is a named plaintiff. If this box is checked, go to item (b).

County in this District:*	California County outside of this District; State, if other than California; or Foreign Country
	Kornit Digital Ltd. - Israel

(b) List the County in this District; California County outside of this District; State if other than California; or Foreign Country, in which **EACH** named defendant resides.
☐ Check here if the government, its agencies or employees is a named defendant. If this box is checked, go to item (c).

County in this District:*	California County outside of this District; State, if other than California; or Foreign Country
See Attachment "A"	See Attachment "A"

(c) List the County in this District; California County outside of this District; State if other than California; or Foreign Country, in which **EACH** claim arose.
Note: In land condemnation cases, use the location of the tract of land involved.

County in this District:*	California County outside of this District; State, if other than California; or Foreign Country
Los Angeles Orange County	

*** Los Angeles, Orange, San Bernardino, Riverside, Ventura, Santa Barbara, or San Luis Obispo Counties**
Note: In land condemnation cases, use the location of the tract of land involved

X. SIGNATURE OF ATTORNEY (OR PRO PER): _____ Date June 10, 2009

Notice to Counsel/Parties: The CV-71 (JS-44) Civil Cover Sheet and the information contained herein neither replace nor supplement the filing and service of pleadings or other papers as required by law. This form, approved by the Judicial Conference of the United States in September 1974, is required pursuant to Local Rule 3-1 is not filed but is used by the Clerk of the Court for the purpose of statistics, venue and initiating the civil docket sheet. (For more detailed instructions, see separate instructions sheet.)

Key to Statistical codes relating to Social Security Cases:

Nature of Suit Code	Abbreviation	Substantive Statement of Cause of Action
861	HIA	All claims for health insurance benefits (Medicare) under Title 18, Part A, of the Social Security Act, as amended. Also, include claims by hospitals, skilled nursing facilities, etc., for certification as providers of services under the program. (42 U.S.C. 1935FF(b))
862	BL	All claims for "Black Lung" benefits under Title 4, Part B, of the Federal Coal Mine Health and Safety Act of 1969. (30 U.S.C. 923)
863	DIWC	All claims filed by insured workers for disability insurance benefits under Title 2 of the Social Security Act, as amended; plus all claims filed for child's insurance benefits based on disability. (42 U.S.C. 405(g))
863	DIWW	All claims filed for widows or widowers insurance benefits based on disability under Title 2 of the Social Security Act, as amended. (42 U.S.C. 405(g))
864	SSID	All claims for supplemental security income payments based upon disability filed under Title 16 of the Social Security Act, as amended.
865	RSI	All claims for retirement (old age) and survivors benefits under Title 2 of the Social Security Act, as amended. (42 U.S.C. (g))

ATTACHMENT "A" TO CIVIL COVER SHEET

Defendants:

ANAJET, INC.; BELQUETTE, INC.; BROTHER INTERNATIONAL CORPORATION; EXPAND SYSTEMS, LLC; INTERNATIONAL DECORATING TECHNOLOGIES, LLC; INTERNATIONAL MACHINE GROUP INC.; M&R SALES AND SERVICES; MELCO INDUSTRIES, INC.; MESA DISTRIBUTORS, INC.; MS PRINTING SOLUTIONS USA; AND OMNIPRINT INTERNATIONAL, INC.

Attorneys (If Known):

For AnaJet:
Steven B. Kray
Stephens & Kray
5000 Birch St., Suite 410
Newport Beach, CA 92660
(949) 476-2106

For M&R Sales & Service:
Roger Stein
Ungaretti & Harris LLP
70 W. Madison St., Suite 3500
Chicago, IL 60602-4224
(312) 977-4400

IX. (b) Venue:

County in this District

Anajet, Inc. – Orange County
Brother International Corporation – Orange County
International Machine Group Inc. – Orange County
Melco Industries Inc. – Los Angeles County
Mesa Distributors, Inc. – Orange County
Omniprint International, Inc. – Orange County

California County outside of this District

All American Manufacturing & Supply Company – Pennsylvania
Belquette, Inc. – Florida
Expand Systems, LLC – Georgia
International Decorating Technologies, LLC – Alameda County
M&R Sales and Services – Illinois
MS Printing Solutions USA – Massachusetts

UNITED STATES DISTRICT COURT
CENTRAL DISTRICT OF CALIFORNIA

NOTICE OF ASSIGNMENT TO UNITED STATES MAGISTRATE JUDGE FOR DISCOVERY

This case has been assigned to District Judge Andrew Guilford and the assigned discovery Magistrate Judge is Marc Goldman.

The case number on all documents filed with the Court should read as follows:

SACV09- 689 AG (MLGx)

Pursuant to General Order 05-07 of the United States District Court for the Central District of California, the Magistrate Judge has been designated to hear discovery related motions.

All discovery related motions should be noticed on the calendar of the Magistrate Judge

---

NOTICE TO COUNSEL

A copy of this notice must be served with the summons and complaint on all defendants (if a removal action is filed, a copy of this notice must be served on all plaintiffs).

Subsequent documents must be filed at the following location:

[ ] **Western Division**
312 N. Spring St., Rm. G-8
Los Angeles, CA 90012

[X] **Southern Division**
411 West Fourth St., Rm. 1-053
Santa Ana, CA 92701-4516

[ ] **Eastern Division**
3470 Twelfth St., Rm. 134
Riverside, CA 92501

Failure to file at the proper location will result in your documents being returned to you.

FOR OFFICE USE ONLY

UNITED STATES DISTRICT COURT
CENTRAL DISTRICT OF CALIFORNIA

KORNIT DIGITAL LTD.

PLAINTIFF(S)

v.

ALL AMERICAN MANUFACTURING & SUPPLY COMPANY; ANAJET, INC.; BELQUETTE, INC.; BROTHER INTERNATIONAL CORPORATION; EXPAND SYSTEMS, LLC; INTERNATIONAL DECORATING TECHNOLOGIES, LLC; INTERNATIONAL MACHINE GROUP INC.; M&R SALES AND SERVICES; MELCO INDUSTRIES, INC.; MESA DISTRIBUTORS, INC.; MS PRINTING SOLUTIONS USA; AND OMNIPRINT INTERNATIONAL, INC.

DEFENDANT(S).

CASE NUMBER

SACV09-0689 AG MLGx

SUMMONS

FOR OFFICE USE ONLY

TO: DEFENDANT(S): All American Manufacturing & Supply Company; Anajet, Inc.; Belquette, Inc.; Brother International Corporation; Expand Systems, LLC; International Decorating Technologies, LLC; International Machine Group Inc.; M&R Sales and Services; Melco Industries, Inc.; Mesa Distributors, Inc.; MS Printing Solutions USA; and Omniprint International, Inc.

A lawsuit has been filed against you.

Within 20 days after service of this summons on you (not counting the day you received it), you must serve on the plaintiff an answer to the attached ☑ complaint ☐ _____ amended complaint ☐ counterclaim ☐ cross-claim or a motion under Rule 12 of the Federal Rules of Civil Procedure. The answer or motion must be served on the plaintiff's attorney, Russell B. Hill, whose address is Howrey LLP, 4 Park Plaza, Suite 1700, Irvine, California 92614. If you fail to do so, judgment by default will be entered against you for the relief demanded in the complaint. You also must file your answer or motion with the court.

Clerk, U.S. District Court

Dated: JUN 10 2009

By: LA'REE HORN
Deputy Clerk

(Seal of the Court)

FOR OFFICE USE ONLY

1192

[Use 60 days if the defendant is the United States or a United States agency, or is an officer or employee of the United States. Allowed 60 days by Rule 12(a)(3)].