FILED

2009 MAY 26 PM 1:38

CLERK U.S. DISTRICT COURT
CENTRAL DIST. OF CALIF.
SANTA ANA

John B. Sganga, Jr. (CSB # 116,211)
jsganga@kmob.com
Karen Vogel Weil (CSB # 145,066)
kweil@kmob.com
Jon W. Gurka (CSB # 187,964)
jgurka@kmob.com
David G. Jankowski (CSB # 205,634)
djankowski@kmob.com
KNOBBE, MARTENS, OLSON & BEAR, LLP
2040 Main Street, Fourteenth Floor
Irvine, CA 92614
Telephone: (949) 760-0404
Facsimile: (949) 760-9502

Attorneys for Plaintiff
KRUSE TECHNOLOGY PARTNERSHIP

IN THE UNITED STATES DISTRICT COURT

FOR THE CENTRAL DISTRICT OF CALIFORNIA

KRUSE TECHNOLOGY PARTNERSHIP, Plaintiff, v. ISUZU MOTORS LIMITED, ISUZU NORTH AMERICA CORPORATION, and ISUZU COMMERCIAL TRUCK OF AMERICA, INC., Defendants.	**CV09 -3710 DDP (FMOx)** Civil Action No. **COMPLAINT FOR PATENT INFRINGEMENT** **DEMAND FOR JURY TRIAL**

Plaintiff Kruse Technology Partnership hereby complains of Defendants Isuzu Motors Limited, Isuzu North America Corporation, and Isuzu Commercial Truck of America, Inc. ("Defendants") and alleges as follows:

I. THE PARTIES

1. Kruse Technology Partnership ("Kruse") is a California Limited Partnership located at 1121 N. Cosby Way, Suite G, Anaheim, California 92806.

2. Upon information and belief, Isuzu Motors Limited is a corporation organized and existing under the laws of Japan, having a principle place of business at 6-26-1 Minami-oi, Shinagawa-ku, Tokyo 140-8722 Japan.

3. Upon information and belief, Isuzu North America Corporation is a corporation organized and existing under the laws of the state of California, having a principle place of business at 13340 183rd Street, Cerritos, California 90703-8748.

4. Upon information and belief, Isuzu Commercial Truck of America, Inc. is corporation organized and existing under the laws of the state of California, having a principle place of business at 13340 183rd Street, Cerritos, California 90703-8748.

5. Upon information and belief, Defendants do business in this judicial district, and have committed acts of infringement in this District.

II. JURISDICTION AND VENUE

6. Kruse realleges and reincorporates the allegations set forth in paragraphs 1 through 5.

7. This cause of action arises under the patent laws of the United States, 35 U.S.C. § 100, et seq., more particularly 35 U.S.C. § 271 and § 281.

8. Subject matter jurisdiction in this Court is proper under 28 U.S.C. § 1338(a).

///

9. Venue is proper in this District under 28 U.S.C. §§ 1391 and 1400(b).

III. FIRST CLAIM FOR RELIEF: PATENT INFRINGEMENT (U.S. PATENT NO. 5,265,562)

10. Kruse realleges and reincorporates the allegations set forth in paragraphs 1 through 9.

11. On November 30, 1993 the United States Patent and Trademark Office duly and lawfully issued U.S. Patent No. 5,265,562 ("the '562 patent") entitled "Internal Combustion Engine With Limited Temperature Cycle" to Douglas C. Kruse. A true and correct copy of the '562 patent is attached hereto as Exhibit A.

12. Kruse is the owner of the '562 patent.

13. Upon information and belief, Defendants are collaborators in the manufacture, use, offer for sale, sale and/or importation of diesel engines embodying the patented invention.

14. Upon information and belief, Defendants have in the past and are currently infringing the '562 patent by making, using, selling, and offering to sell its diesel engines embodying the patented invention. Defendants' acts constitute direct and indirect infringement of the '562 patent in violation of 35 U.S.C. § 271.

15. Upon information and belief, Kruse has been and will continue to be injured by Defendants' infringement of the '562 patent, and such acts will continue unless they are enjoined therefrom.

16. Upon information and belief, Defendants have derived, received, and will continue to derive and receive gains, profits and advantages from the aforesaid acts of infringement in an amount that is not presently known to Kruse. By reason of the aforesaid infringing acts, Kruse has been damaged, and is entitled to monetary relief in an amount to be proven at trial.

IV. SECOND CLAIM FOR RELIEF: PATENT INFRINGEMENT (U.S. PATENT NO. 6,058,904)

17. Kruse realleges and reincorporates the allegations set forth in paragraphs 1 through 16.

18. On May 9, 2000 the United States Patent and Trademark Office duly and lawfully issued U.S. Patent No. 6,058,904 ("the '904 patent") entitled "Internal Combustion Engine With Limited Temperature Cycle" to Douglas C. Kruse. A true and correct copy of the '904 patent is attached hereto as Exhibit B.

19. Kruse is the owner of the '904 patent.

20. Upon information and belief, Defendants are collaborators in the manufacture, use, offer for sale, sale and/or importation of diesel engines embodying the patented invention.

21. Upon information and belief, Defendants have in the past and are currently infringing the '904 patent by making, using, selling, and offering to sell its diesel engines embodying the patented invention. Defendants' acts constitute direct and indirect infringement of the '904 patent in violation of 35 U.S.C. § 271.

22. Upon information and belief, Kruse has been and will continue to be injured by Defendants' infringement of the '904 patent, and such acts will continue unless they are enjoined therefrom.

23. Upon information and belief, Defendants have derived, received, and will continue to derive and receive gains, profits and advantages from the aforesaid acts of infringement in an amount that is not presently known to Kruse. By reason of the aforesaid infringing acts, Kruse has been damaged, and is entitled to monetary relief in an amount to be proven at trial.

///

///

V. THIRD CLAIM FOR RELIEF: PATENT INFRINGEMENT (U.S. PATENT NO. 6,405,704)

24. Kruse realleges and reincorporates the allegations set forth in paragraphs 1 through 23.

25. On June 18, 2002, the United States Patent and Trademark Office duly and lawfully issued U.S. Patent No. 6,405,704 ("the '704 patent") entitled "Internal Combustion Engine With Limited Temperature Cycle" to Douglas C. Kruse. A true and correct copy of the '704 patent is attached hereto as Exhibit C.

26. Kruse is the owner of the '704 patent.

27. Upon information and belief, Defendants are collaborators in the manufacture, use, offer for sale, sale and/or importation of diesel engines embodying the patented invention.

28. Upon information and belief, Defendants have in the past and are currently infringing the '704 patent by making, using, selling, and offering to sell its diesel engines embodying the patented invention. Defendants' acts constitute direct and indirect infringement of the '704 patent in violation of 35 U.S.C. § 271.

29. Upon information and belief, Kruse has been and will continue to be injured by Defendants' infringement of the '704 patent, and such acts will continue unless they are enjoined therefrom.

30. Upon information and belief, Defendants have derived, received, and will continue to derive and receive gains, profits and advantages from the aforesaid acts of infringement in an amount that is not presently known to Kruse. By reason of the aforesaid infringing acts, Kruse has been damaged, and is entitled to monetary relief in an amount to be proven at trial.

///

///

PRAYER FOR RELIEF

WHEREFORE, Plaintiff Kruse Technology Partnership prays for a judgment in its favor against Defendants Isuzu Motors Limited, Isuzu North America Corporation, and Isuzu Commercial Truck of America, Inc. for the following relief:

A. For an Order adjudging Defendants to have directly and indirectly infringed the '562 patent under 35 U.S.C. § 271;

B. For a permanent injunction pursuant to 35 U.S.C. § 283 enjoining Defendants, their officers, agents, servants, employees and attorneys, and those persons in active concert or participation with the Defendants, from directly or indirectly, infringing the '562 patent;

C. For a recovery of Kruse's compensatory damages pursuant to 35 U.S.C. § 284 for Defendants' infringement of the '562 patent;

D. For an Order adjudging Defendants to have directly and indirectly infringed the '904 patent under 35 U.S.C. § 271;

E. For a permanent injunction pursuant to 35 U.S.C. § 283 enjoining Defendants, their officers, agents, servants, employees and attorneys, and those persons in active concert or participation with the Defendant, from directly or indirectly, infringing the '904 patent;

F. For a recovery of Kruse's compensatory damages pursuant to 35 U.S.C. § 284 for Defendants' infringement of the '904 patent;

G. For an Order adjudging Defendants to have directly and indirectly infringed the '704 patent under 35 U.S.C. § 271;

H. For a permanent injunction pursuant to 35 U.S.C. § 283 enjoining Defendants, their officers, agents, servants, employees and attorneys, and those persons in active concert or participation with the Defendant, from directly or indirectly, infringing the '704 patent;

///

I. For a recovery of Kruse's compensatory damages pursuant to 35 U.S.C. § 284 for Defendants' infringement of the '704 patent;

J. For an assessment of prejudgment and postjudgment interest and costs against Defendants, together with an award of such interest and costs, pursuant to 35 U.S.C. § 284; and

K. For such other and further relief as this Court may deem just and proper.

Respectfully submitted,

KNOBBE, MARTENS, OLSON & BEAR, LLP

Dated: May 26, 2009

By: _____

John B. Sganga, Jr.
Karen Vogel Weil
Jon W. Gurka
David G. Jankowski

Attorneys for Plaintiff
KRUSE TECHNOLOGY PARTNERSHIP

JURY DEMAND

Pursuant to Fed. R. Civ. P. 38(b), Plaintiff Kruse Technology Partnership demands a trial by jury of all issues raised by this Complaint that are triable by jury.

Respectfully submitted,
KNOBBE, MARTENS, OLSON & BEAR, LLP

Dated: May 26, 2009

By: _____
John B. Sganga, Jr.
Karen Vogel Weil
Jon W. Gurka
David G. Jankowski

Attorneys for Plaintiff
KRUSE TECHNOLOGY PARTNERSHIP

7181013

EXHIBIT A

US005265562A

United States Patent [19]

Kruse

[11] **Patent Number: 5,265,562**

[45] **Date of Patent: Nov. 30, 1993**

[54] **INTERNAL COMBUSTION ENGINE WITH LIMITED TEMPERATURE CYCLE**

[76] Inventor: **Douglas C. Kruse**, 9440 Irondale Ave., Chatsworth, Calif. 91311

[21] Appl. No.: **919,916**

[22] Filed: **Jul. 27, 1992**

[51] **Int. Cl.**[5] **F02B 1/14**; F02B 41/00; F02D 41/26

[52] **U.S. Cl.** ..... **123/27 R**; 123/37; 123/299

[58] **Field of Search** ..... 123/299, 300, 27 R, 123/27 GE, 27 A, 37

[56] **References Cited**

U.S. PATENT DOCUMENTS

2,917,031	12/1959	Nestorovic	123/299
3,125,076	3/1964	Mullaney	123/27 R
4,070,998	1/1978	Grow	123/37 X
4,704,999	11/1987	Hashikawa et al.	123/299
4,836,161	6/1989	Abthoff et al.	123/299
4,858,579	8/1989	Elsbett et al.	123/299
4,977,875	12/1990	Kumagai et al.	123/299
5,101,785	4/1992	Ito	123/299 X

Primary Examiner—Willis R. Wolfe
Attorney, Agent, or Firm—Spensley Horn Jubas & Lubitz

[57] **ABSTRACT**

An expandable chamber piston type internal combustion engine operating in an open thermodynamic cycle includes a combustion process having a constant volume (isochoric) phase followed by a constant temperature (isothermal) phase.

8 Claims, 8 Drawing Sheets

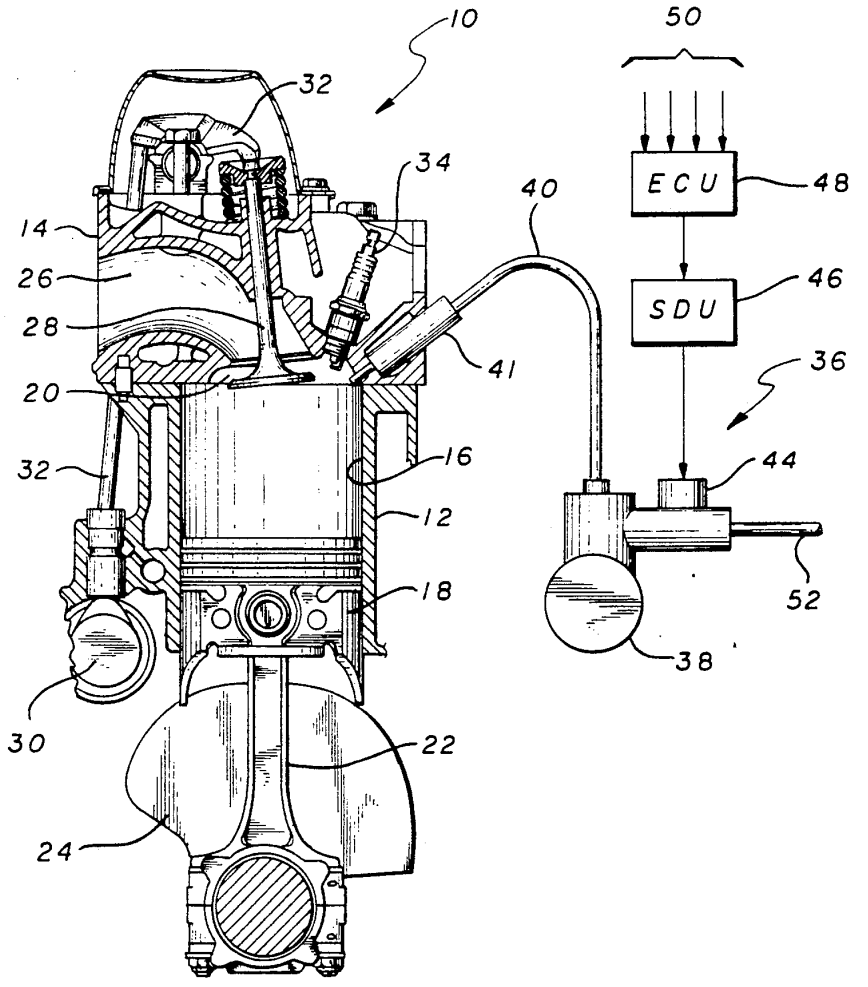

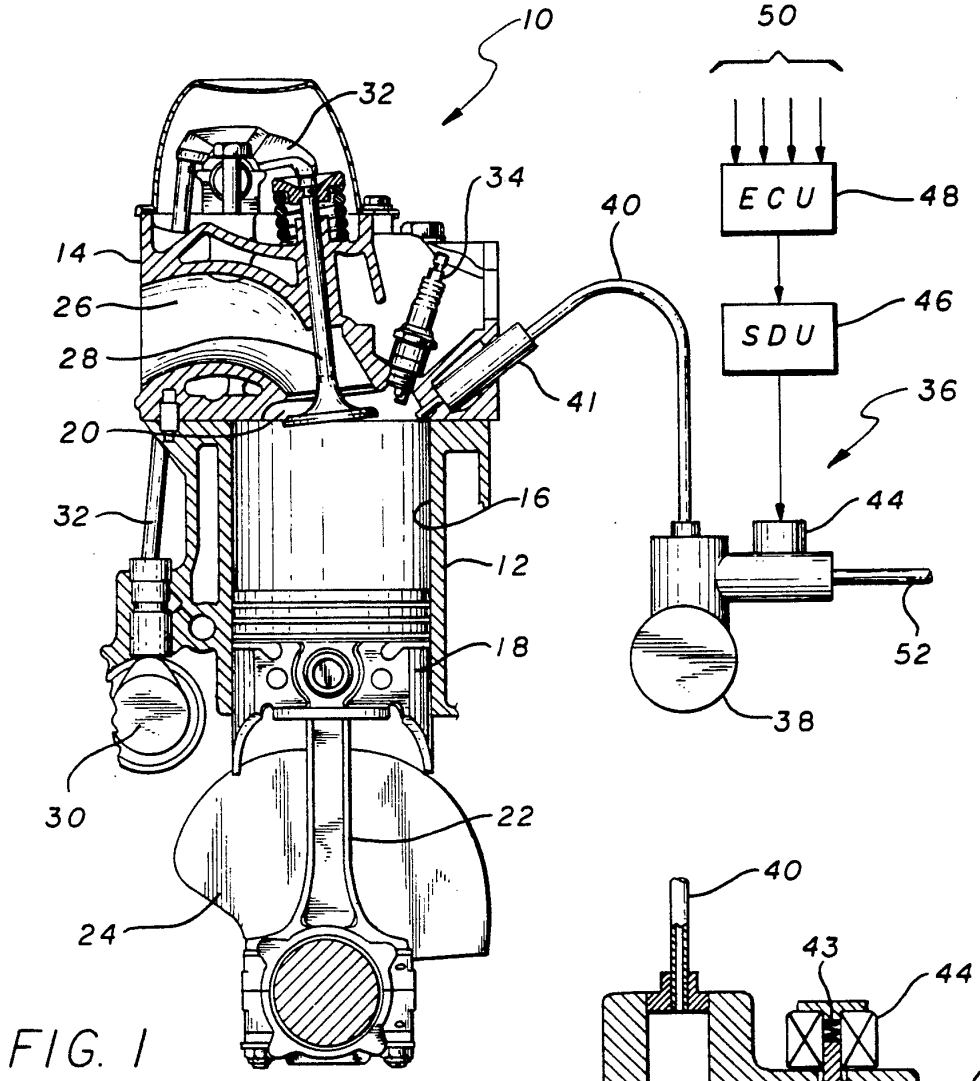
10
50
32
34
40
ECU
48
14
26
28
41
SDU
46
36
20
16
44
32
12
52
18
38
30
22
24

FIG. 1

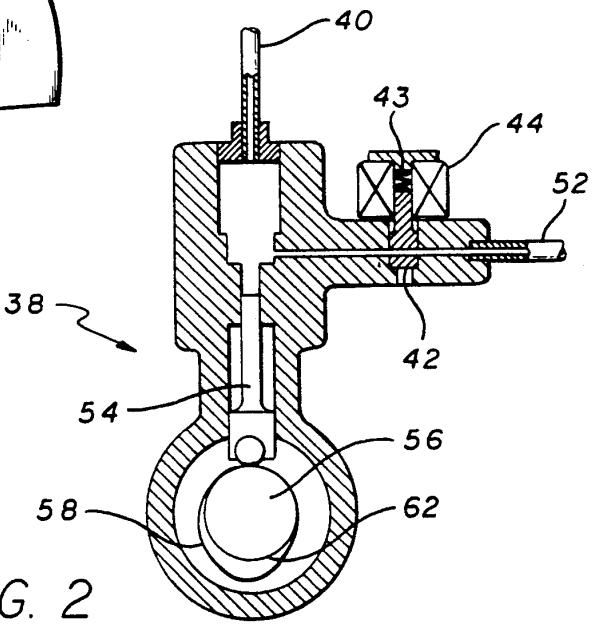
40
43
44
52
38
42
54
56
58
62

FIG. 2

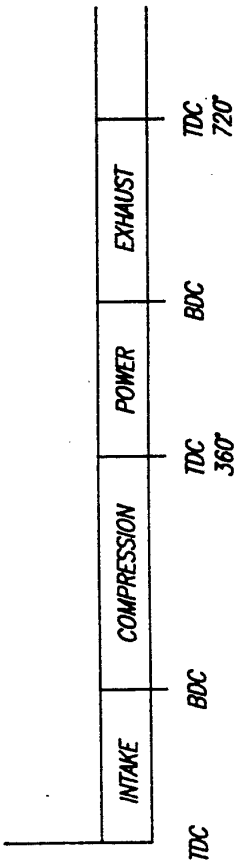

FIG. 3(a)

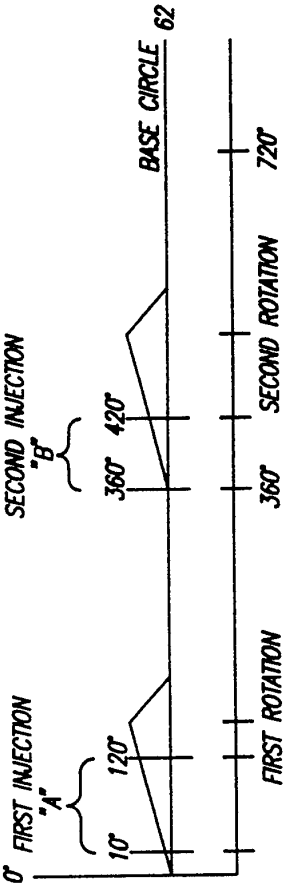

FIG. 3(b)

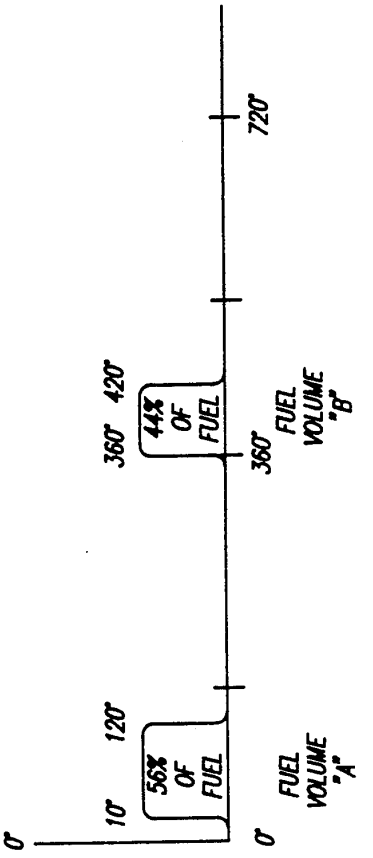

FIG. 3(c)

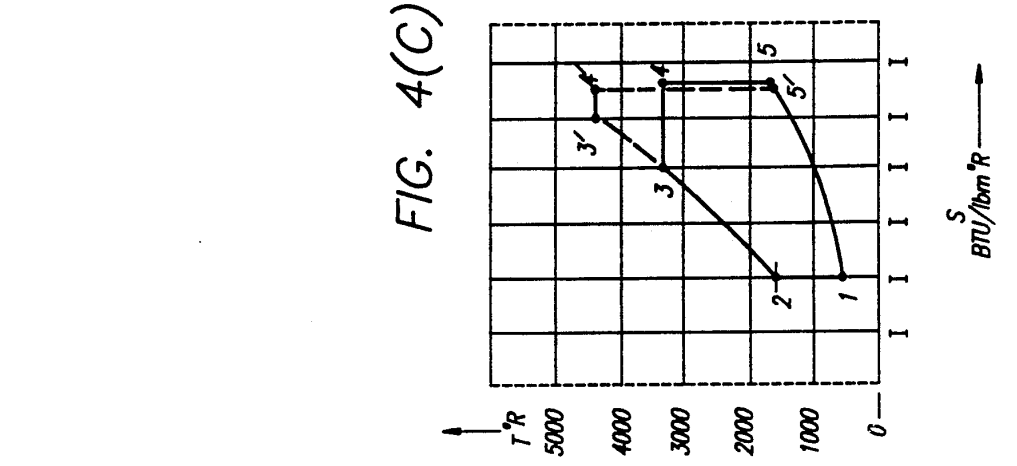

FIG. 4(C)

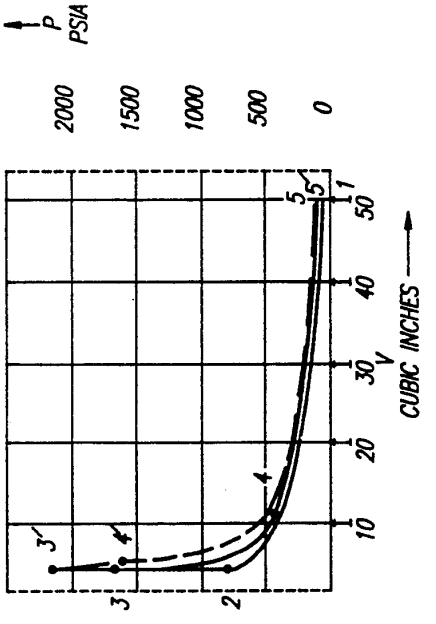

FIG. 4(A)

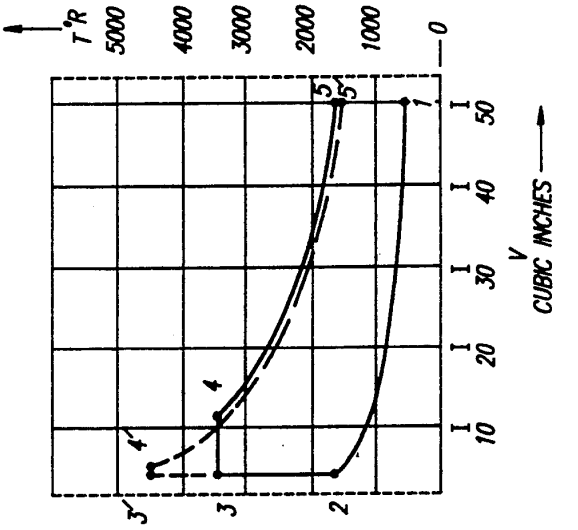

FIG. 4(B)

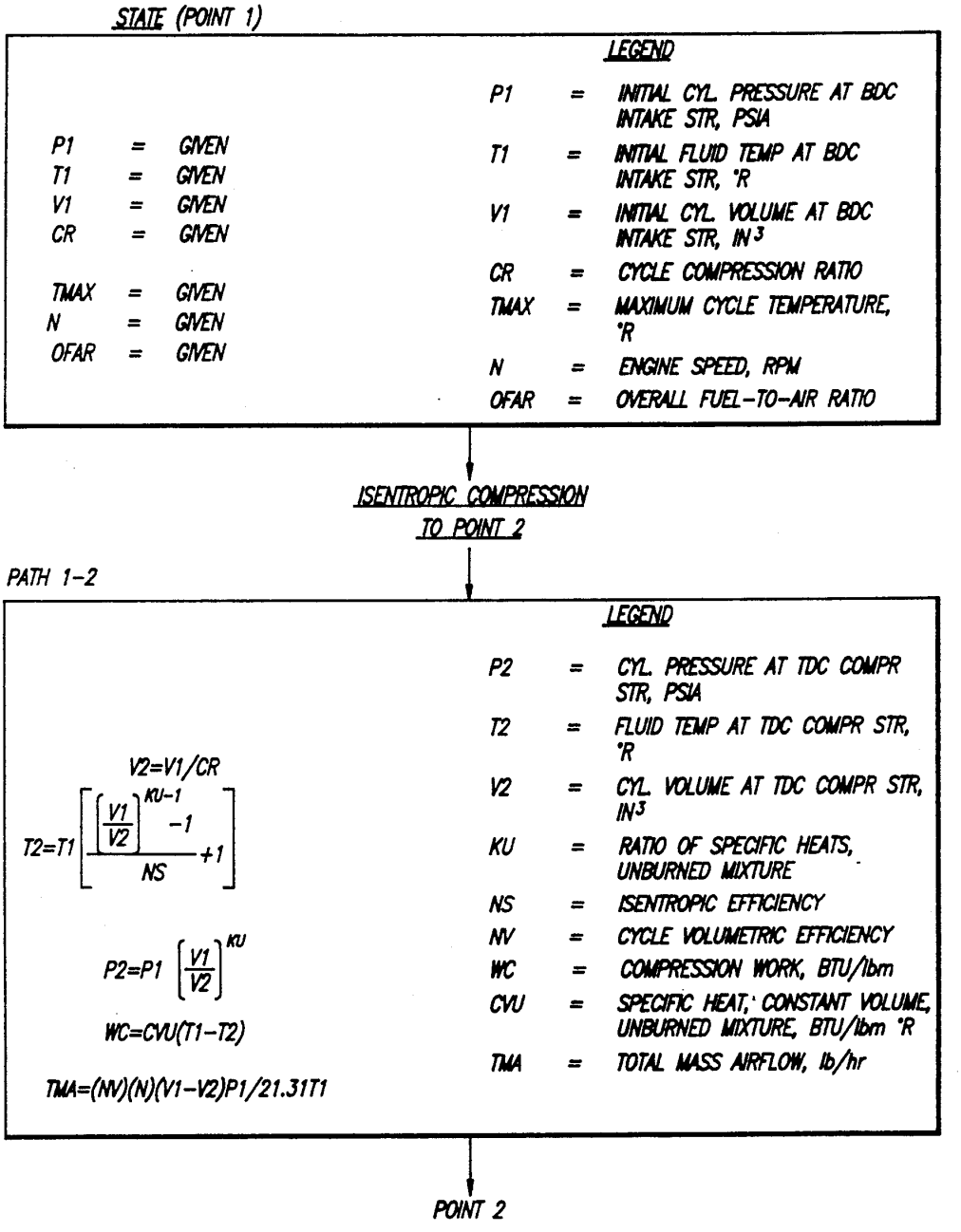
STATE (POINT 1)
P1 = GIVEN
T1 = GIVEN
V1 = GIVEN
CR = GIVEN
TMAX = GIVEN
N = GIVEN
OFAR = GIVEN
LEGEND
P1 = INITIAL CYL. PRESSURE AT BDC INTAKE STR, PSIA
T1 = INITIAL FLUID TEMP AT BDC INTAKE STR, °R
V1 = INITIAL CYL. VOLUME AT BDC INTAKE STR, IN3
CR = CYCLE COMPRESSION RATIO
TMAX = MAXIMUM CYCLE TEMPERATURE, °R
N = ENGINE SPEED, RPM
OFAR = OVERALL FUEL-TO-AIR RATIO
ISENTROPIC COMPRESSION TO POINT 2
PATH 1-2
V2=V1/CR
T2=T1[((V1/V2)^(KU-1)-1)/NS+1]
P2=P1(V1/V2)^KU
WC=CVU(T1-T2)
TMA=(NV)(N)(V1-V2)P1/21.31T1
LEGEND
P2 = CYL. PRESSURE AT TDC COMPR STR, PSIA
T2 = FLUID TEMP AT TDC COMPR STR, °R
V2 = CYL. VOLUME AT TDC COMPR STR, IN3
KU = RATIO OF SPECIFIC HEATS, UNBURNED MIXTURE
NS = ISENTROPIC EFFICIENCY
NV = CYCLE VOLUMETRIC EFFICIENCY
WC = COMPRESSION WORK, BTU/lbm
CVU = SPECIFIC HEAT, CONSTANT VOLUME, UNBURNED MIXTURE, BTU/lbm °R
TMA = TOTAL MASS AIRFLOW, lb/hr
POINT 2

FIG. 5A

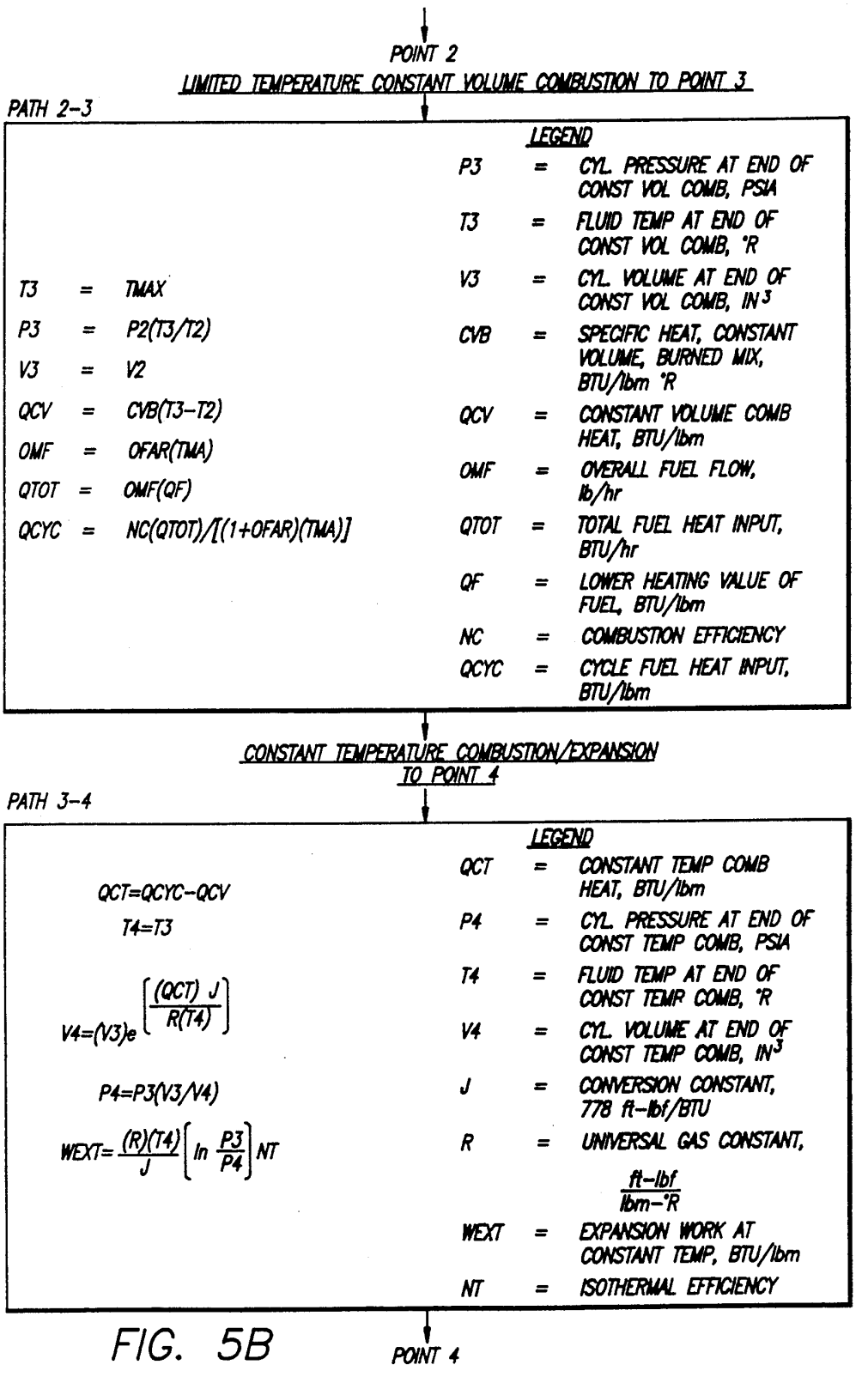
POINT 2
LIMITED TEMPERATURE CONSTANT VOLUME COMBUSTION TO POINT 3
PATH 2-3
T3 = TMAX
P3 = P2(T3/T2)
V3 = V2
QCV = CVB(T3-T2)
OMF = OFAR(TMA)
QTOT = OMF(QF)
QCYC = NC(QTOT)/[(1+OFAR)(TMA)]
LEGEND
P3 = CYL. PRESSURE AT END OF CONST VOL COMB, PSIA
T3 = FLUID TEMP AT END OF CONST VOL COMB, °R
V3 = CYL. VOLUME AT END OF CONST VOL COMB, IN3
CVB = SPECIFIC HEAT, CONSTANT VOLUME, BURNED MIX, BTU/lbm °R
QCV = CONSTANT VOLUME COMB HEAT, BTU/lbm
OMF = OVERALL FUEL FLOW, lb/hr
QTOT = TOTAL FUEL HEAT INPUT, BTU/hr
QF = LOWER HEATING VALUE OF FUEL, BTU/lbm
NC = COMBUSTION EFFICIENCY
QCYC = CYCLE FUEL HEAT INPUT, BTU/lbm
CONSTANT TEMPERATURE COMBUSTION/EXPANSION TO POINT 4
PATH 3-4
QCT=QCYC-QCV
T4=T3
V4=(V3)e^[(QCT) J / R(T4)]
P4=P3(V3/V4)
WEXT=(R)(T4)/J [ln P3/P4] NT
LEGEND
QCT = CONSTANT TEMP COMB HEAT, BTU/lbm
P4 = CYL. PRESSURE AT END OF CONST TEMP COMB, PSIA
T4 = FLUID TEMP AT END OF CONST TEMP COMB, °R
V4 = CYL. VOLUME AT END OF CONST TEMP COMB, IN3
J = CONVERSION CONSTANT, 778 ft-lbf/BTU
R = UNIVERSAL GAS CONSTANT, ft-lbf / lbm-°R
WEXT = EXPANSION WORK AT CONSTANT TEMP, BTU/lbm
NT = ISOTHERMAL EFFICIENCY
POINT 4

FIG. 5B

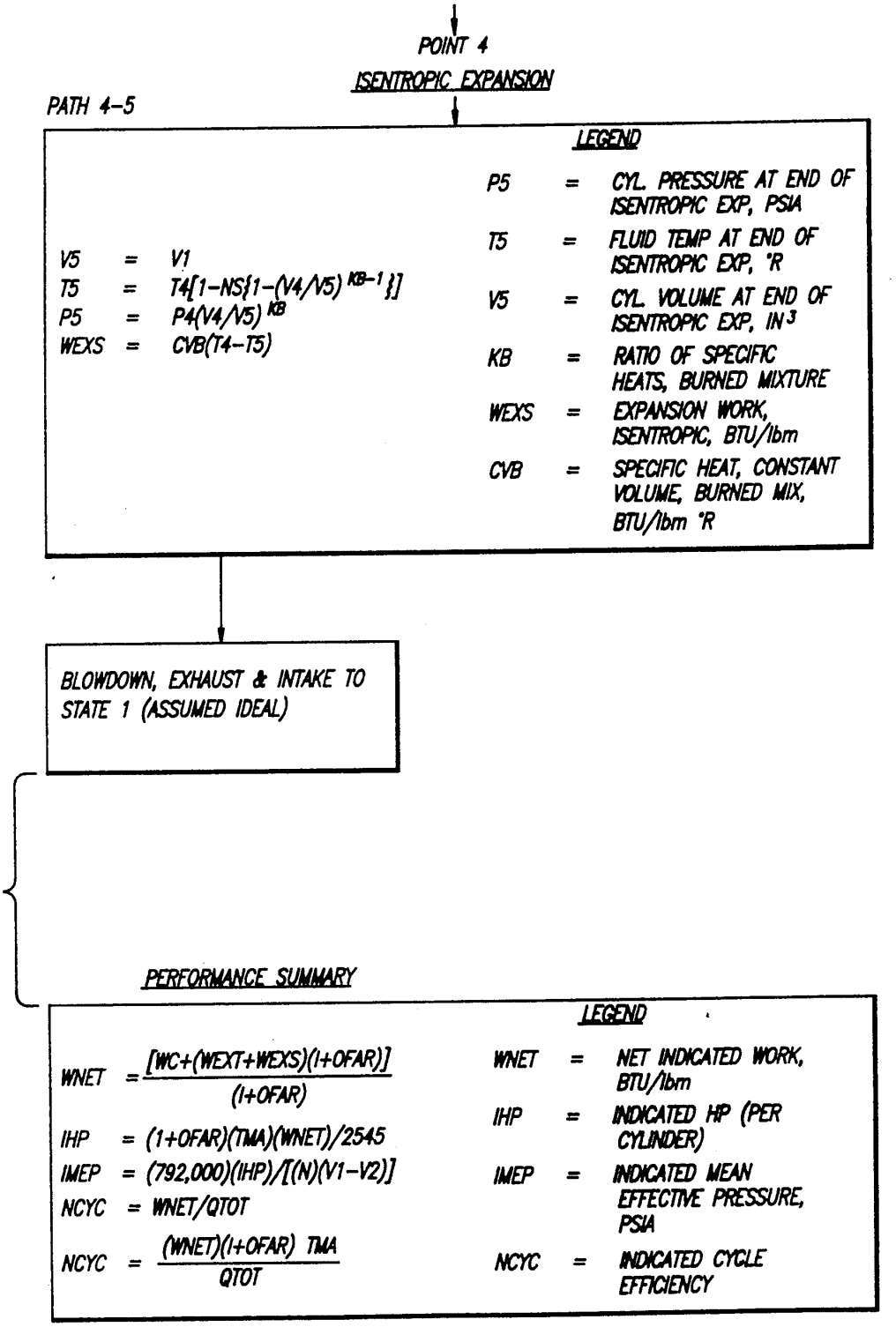
POINT 4
ISENTROPIC EXPANSION
PATH 4-5
LEGEND
V5 = V1
T5 = T4[1-NS{1-(V4/V5)^(KB-1)}]
P5 = P4(V4/V5)^KB
WEXS = CVB(T4-T5)
P5 = CYL. PRESSURE AT END OF ISENTROPIC EXP, PSIA
T5 = FLUID TEMP AT END OF ISENTROPIC EXP, °R
V5 = CYL. VOLUME AT END OF ISENTROPIC EXP, IN³
KB = RATIO OF SPECIFIC HEATS, BURNED MIXTURE
WEXS = EXPANSION WORK, ISENTROPIC, BTU/lbm
CVB = SPECIFIC HEAT, CONSTANT VOLUME, BURNED MIX, BTU/lbm °R
BLOWDOWN, EXHAUST & INTAKE TO STATE 1 (ASSUMED IDEAL)
PERFORMANCE SUMMARY
LEGEND
WNET = [WC+(WEXT+WEXS)(1+OFAR)] / (1+OFAR)
IHP = (1+OFAR)(TMA)(WNET)/2545
IMEP = (792,000)(IHP)/[(N)(V1-V2)]
NCYC = WNET/QTOT
NCYC = (WNET)(1+OFAR) TMA / QTOT
WNET = NET INDICATED WORK, BTU/lbm
IHP = INDICATED HP (PER CYLINDER)
IMEP = INDICATED MEAN EFFECTIVE PRESSURE, PSIA
NCYC = INDICATED CYCLE EFFICIENCY

FIG. 5C

FIG. 6

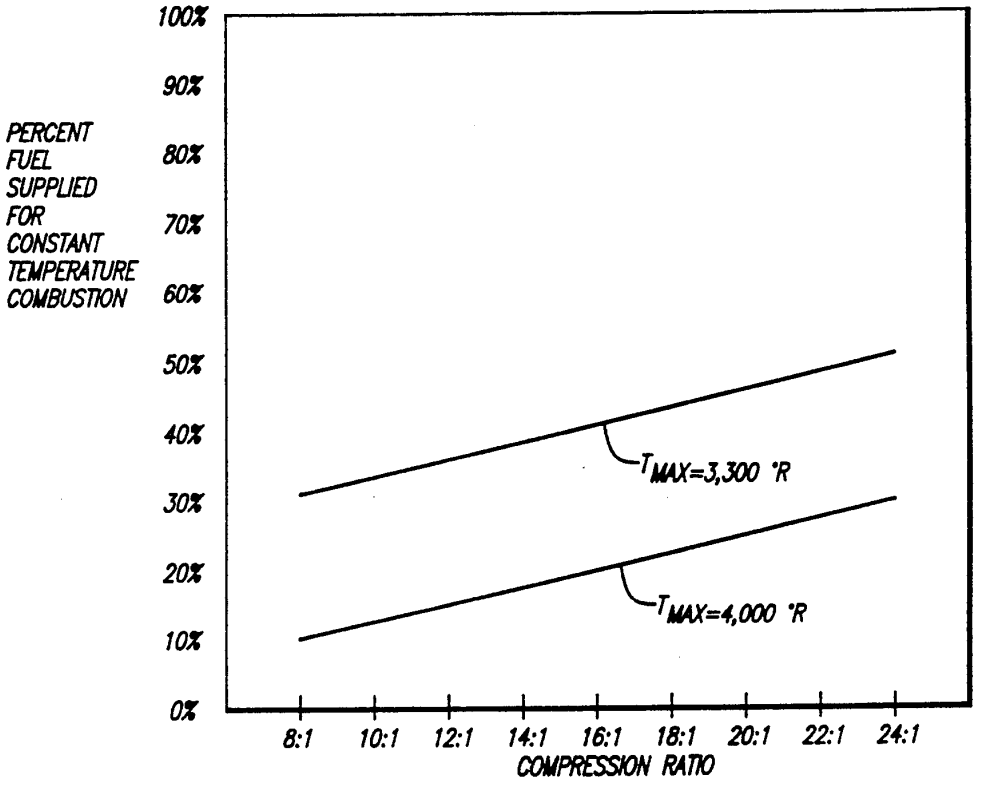
100%
90%
80%
70%
60%
50%
40%
30%
20%
10%
0%
PERCENT FUEL SUPPLIED FOR CONSTANT TEMPERATURE COMBUSTION
T_{MAX}=3,300 °R
T_{MAX}=4,000 °R
8:1
10:1
12:1
14:1
16:1
18:1
20:1
22:1
24:1
COMPRESSION RATIO

FIG. 7

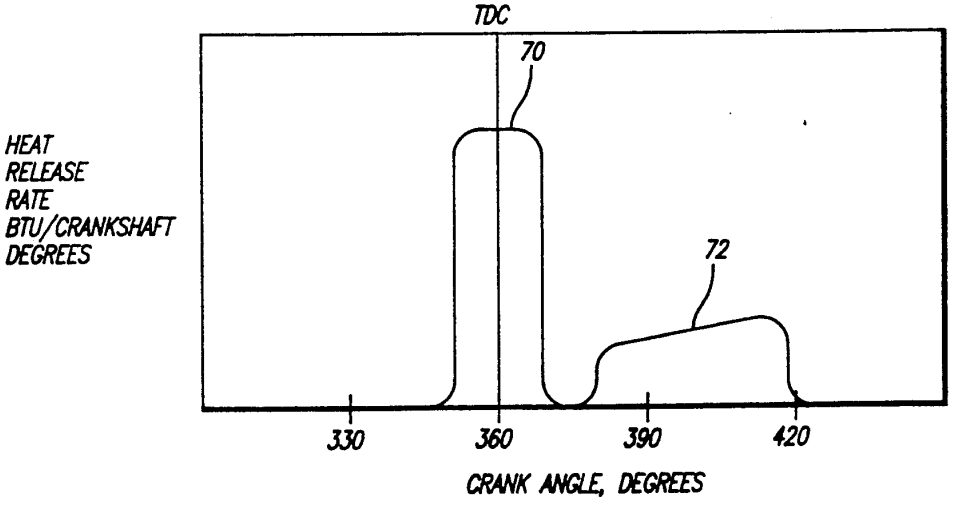
TDC
70
72
HEAT RELEASE RATE BTU/CRANKSHAFT DEGREES
330
360
390
420
CRANK ANGLE, DEGREES

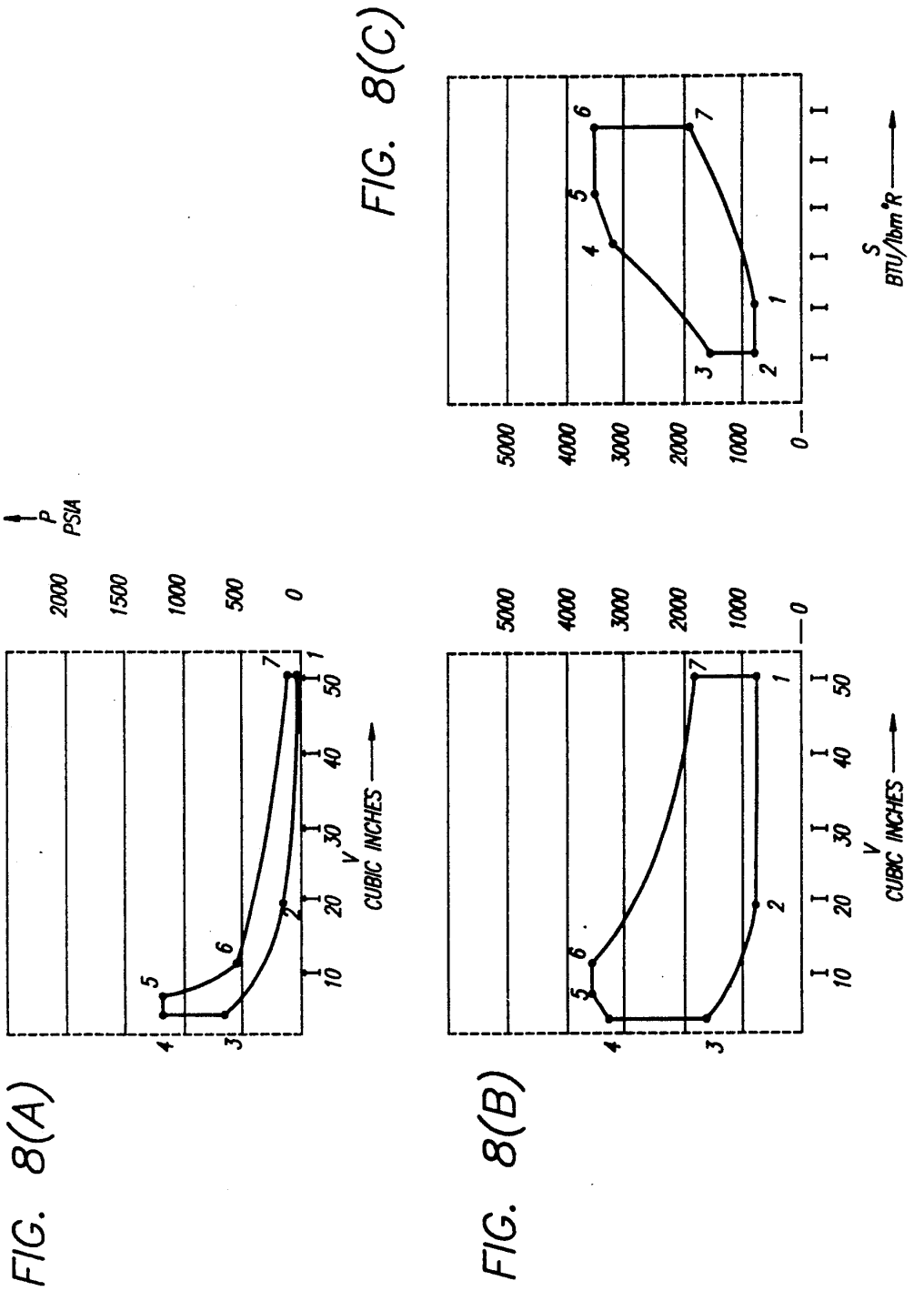

FIG. 8(A)

FIG. 8(B)

FIG. 8(C)

INTERNAL COMBUSTION ENGINE WITH LIMITED TEMPERATURE CYCLE

FIELD OF THE INVENTION

The present invention relates generally to internal combustion engines and more particularly to expandable chamber piston engines operating in an open thermodynamic cycle.

BACKGROUND OF THE INVENTION

Automotive vehicle and engine manufacturers, fuel injection equipment suppliers and, indeed, society as a whole, share in the desire for efficient, effective transportation. The balance between combustion processes to produce power, and those processes which create pollution, is best addressed by enhancing the fundamental efficiency of the engine processes.

It is well known that the ideal Carnot cycle, in which isothermal heat addition and rejection are combined with isentropic compression and expansion, is the most efficient engine cycle for any given upper and lower operating temperatures. However, the Carnot cycle is not practical for an expanding chamber piston engine due to the very high (over 50:1) compression ratio required to produce significant power. Nevertheless, a practical process which could make some use of the highly efficient Carnot process would be an advance in the art.

The most practical engine, and thus presently the most predominant, is the Otto cycle engine which includes a compression process of a fuel-air mixture followed by unregulated combustion. It is well known that for a given compression ratio the ideal Otto cycle is the most efficient expanding chamber piston engine since the Otto cycle combines high peak temperature with a practical average temperature of heat input. However, the high peak combustion temperature of an Otto engine can cause auto-ignition of a portion of the fuel-air mixture, resulting in engine noise and damage to the engine, as well as the creation of excess amounts of undesired NOx.

In the past, auto-ignition in Otto cycle engines was reduced by use of chemical additives to the fuel such as lead compounds (no longer permitted by law), manganese compounds (which cause spark plug deposits to build up, resulting in misfire), benzene (the use of which is presently being curtailed by legislative mandate) or fuel reformulations to prevent deleterious auto-ignition while meeting environmental goals. Auto-ignition can also be reduced by limiting the combustion temperature, either through use of a lower compression ratio (which reduces both power and efficiency), or by exhaust gas recirculation, lean-burn or stratified charge techniques, all of which cause power loss.

For general purpose road use, the engines of emission-constrained passenger cars are presently limited to useful compression of about 10:1. Above that limit the increased cost of the fuel control system and the additional cost of more platinum or rhodium for exhaust catalytic converters generally outweighs the benefit of higher compression ratios. A technology which would allow a practical Otto compression process to operate at compression ratios higher than 10:1 would be an advance in the art.

An improvement on the Otto cycle, as represented by a higher useful compression ratio, is an ideal Diesel cycle comprising isothermal heat addition and isochoric

(constant volume) heat rejection combined with isentropic compression and expansion. This ideal Diesel cycle overcomes the fuel octane limit of the Otto cycle by utilizing air alone for the compression process and mixing the fuel with the process air as part of the combustion process. This allows use of a low octane-rated fuel, but requires cetane-rated fuel (enhanced auto-ignition). However, the isothermal process of the aforedescribed ideal Diesel cycle was found to be impractical, due to the extremely high compression ratio (50:1) required, and an alternate heat addition process (isobaric or constant pressure) was put into practice.

Another variation on the ideal Diesel cycle is the ideal limited pressure cycle including combined isochoric and isobaric heat addition, and isochoric heat rejection combined with isentropic compression and expansion. This combustion process allows an engine to be operated at moderate compression ratios (14:1 to 17:1 for large open chamber engines) as well as high compression ratios (20:1 to 25:1 for small displacement engines).

While Diesel-type engines are fuel efficient, due to their high compression ratio, they tend to be heavier and lower in power than an Otto engine of the same displacement. In addition, all direct injection engines of the Diesel type suffer from an ignition lag which reduces the control and effectiveness of the combustion process. One way to overcome this ignition lag is to preheat the fuel to 1,500° R before injection. This produces hypergolic combustion upon injection, but is an impractical method due to the short service life of the injector nozzle.

Hybrid engine processes have been developed incorporating characteristics of both diesel and spark ignition engines but these have proven impractical for road use. Examples of these hybrid processes include the Texaco TCCS, the Ford PROCO, Ricardo, MAN-FM and the KHD-AD. All employ open chamber, direct injection spark ignition engines using stratified charge techniques to improve efficiency. These developmental engines suffer substantial power loss because of ignition lag, incomplete utilization of the process air and poor mixing of the fuel/air charge.

Because the limits of current technology are thus being reached, there exists a need for an internal combustion engine that will provide a better balance between power production, fuel efficiency, pollution creation and pollution control by use of a more practical combination of thermodynamic processes.

SUMMARY OF THE INVENTION

Basically, the present invention meets the foregoing requirements and constraints by utilizing a new combination of thermodynamic processes which limits maximum combustion temperature, thereby enabling an internal combustion engine to operate at a higher compression ratio, a higher power output or a lower peak temperature with a given fuel.

Broadly, in accordance with one exemplary embodiment, the invention is practiced by controlling the fuel quantity and injection timing of a direct injection system in an internal combustion engine, so as to produce a combustion process consisting of a constant volume (isochoric) phase and a constant temperature (isothermal) phase. The limited temperature engine cycle so achieved allows the use of substantially higher compression ratios with a given fuel or with a given NOx

emission limit, thereby providing a higher practical thermal efficiency than the standard lower compression ratio Otto cycle when measured by fuel/air analysis or by analyzing the test data of an actual engine.

In addition, the limited temperature cycle so achieved allows a higher power output and a lower NOx creation rate at a given compression ratio with a low quality fuel.

In accordance with another aspect of the invention, there is provided a new method of operating an expanding chamber internal combustion piston engine for providing limited temperature combustion. Such an engine includes at least one cylinder and an associated piston for forming a combustion chamber with the piston having a top dead center position; an operating cycle including an intake stroke, a compression stroke and an expansion stroke; and a fuel introduction system. The method of operating the engine pursuant to the invention comprises the steps of first forming a predetermined fuel/air mixture by introducing a predetermined fraction in one or more discrete quantities of the total fuel necessary for complete combustion of the process air. Next, the relatively lean fuel/air mixture so introduced is ignited when the piston is substantially at top dead center, this first phase of combustion thereby comprising a substantially isochoric or constant volume process. The fuel supplied for the isochoric process is an amount which will produce a greatly reduced temperature of the working fluid, as low as 3,300 degrees Rankine, or less, even at high compression ratios. Last, there is introduced, substantially at the beginning of the expansion stroke, a second fraction (in one or more discrete quantities) of the total fuel necessary for complete combustion. The combustion resulting from the introduction of the second fraction is a substantially isothermal process. The isothermal process occurs at a temperature which is significantly less than that attained in a comparable Otto cycle engine having the same or a substantially lower compression ratio. NO_X emissions are thereby limited and such reduction is obtained at lower cost than existing systems.

Those skilled in the art will recognize that the method of the present invention makes use of the Otto process for the first phase of the heat input or combustion process and the Carnot process for the second phase of heat input or combustion process. Comparison of the operating cycle of the invention with the standard Otto cycle using ideal fuel/air analysis shows an unexpected benefit from the invention: the overall operating efficiency of an engine (with a given compression ratio) will be greater using the limited temperature cycle of the present invention than when using the Otto cycle, when high temperature losses are considered. This increase in efficiency at a given compression ratio is a benefit derived from reduced cycle temperature.

Another advantage of the present invention is that it allows an engine to be operated more efficiently (at a higher compression ratio) than is possible with present engines. The most readily available motor vehicle gasoline fuels have combustion quality ratings of about 90 octane, which generally limits many engines to a compression ratio of about 10:1 for public road use. Since octane rating is indirectly related to high combustion temperature (high operating temperatures require high octane fuel), and the invention reduces the operating temperature, it follows that the invention enables the use of a higher engine compression ratio with a commensurate gain in engine efficiency.

In sum, the method of the present invention allows a practical engine to make use of an ideal process: during the isothermal combustion process, heat energy is converted directly to work. The invention utilizes present engine design and materials and may be practiced by modifying existing internal combustion engines to incorporate the desired compression ratio and appropriate fuel introduction systems.

BRIEF DESCRIPTION OF THE DRAWINGS

Further objects, advantages and features of the invention will become evident from the detailed description of the preferred embodiment when read in conjunction with the accompanying drawings in which:

FIG. **1** is a schematic representation of a portion of a four-cycle internal combustion engine utilizing the principles of the present invention;

FIG. **2** is a side elevation view, in cross section, of a solenoid-operated fuel injector which may be used in the engine depicted in FIG. **1**, the injector including a plunger cam providing fuel injection volumes and rates in accordance with the present invention;

FIG. **3** includes plots of (1) fuel injector plunger lift versus engine crank angle and (2) injected fuel volumes versus engine crank angle in accordance with one exemplary operating condition of an engine in accordance with the present invention;

FIG. **4** shows pressure-volume and related engine cycle diagrams further explaining the cycle of the present invention;

FIGS. **5A–5C** together depict a flow chart showing steps for analyzing the engine cycle of the present invention and for calculating engine performance and other operating parameters;

FIG. **6** includes plots of percent fuel supplied for constant temperature combustion vs. compression ratio for two maximum temperatures (3,300° R and 4,000° R);

FIG. **7** is a plot of heat release rate vs. crank shaft angle for a process according to the invention having a maximum temperature of 3,300° R; and

FIG. **8** shows pressure-volume and related engine cycle diagrams relating to another embodiment of the invention.

DETAILED DESCRIPTION OF THE PREFERRED EMBODIMENTS

With reference to FIG. **1**, there is shown in schematic form a normally aspirated, four-cycle spark ignition engine **10** employing the teachings of the present invention. It will become evident to those skilled in the art that the advantages of the invention may be realized with two-cycle spark ignition engines, as well as Wankel rotary-type engines and those that are turbo- or supercharged. Further, although a single cylinder is shown in FIG. **1** for simplicity, it will be understood that an engine incorporating the invention will typically have multiple cylinders.

The engine **10** comprises a block **12**, a cylinder head **14** and a cylinder **16** having a piston **18** adapted to reciprocate between top and bottom dead centers within the cylinder **16** to define with the cylinder **16** a combustion chamber **20**. The reciprocating motion of the piston **18** is converted to rotational output motion by means of a connecting rod **22** and a crankshaft assembly **24**, all as well known in the art. As will be explained in greater detail below, in accordance with the invention the compression ratio of the engine **10** will typically be substantially higher than that of a conventional automotive

spark ignition internal combustion engine. For example, while a conventional engine may have a compression ratio of 8:1 to 10:1, an engine employing the teachings of the present invention may have a compression ratio of 18:1.

The engine **10** further includes an air induction system **26** including an air intake valve **28** in the cylinder head **14**. The valve **28**, along with an exhaust valve (not visible in FIG. **1**), is actuated by a conventional cam shaft **30** and related valve train mechanism **32**. Also mounted in the cylinder head **14** is a spark plug **34** whose energization is controlled and timed by means well known in the art.

Referring now also to FIG. **2**, fuel is supplied to the engine **10** by a fuel injection system **36** which precisely regulates the fuel/air mixture for combustion and exhaust emission control. The fuel injection system **36** includes an electrically actuated fuel injection pump **38** installed in or adjacent to the cylinder head **14** and adapted to inject predetermined quantities of fuel directly into the combustion chamber **20** via an injection line **40** and an injector nozzle **41** terminating inside the combustion chamber **20** and adjacent to the spark plug **34**. The injector pump **38** may, for example, take the form of a Model **200** fuel injection unit manufactured by AMBAC International, with a modified cam as described below and the addition of a solenoid **44**. The injector pump **38** has a fuel spill valve **42** operated against the bias of a spring **43** by the solenoid **44** energizable by a solenoid drive unit (SDU) **46**. The drive unit **46** is in turn controlled by an electronic control unit (ECU) **48** which monitors, by means of appropriate sensors, selected engine operating conditions such as intake and exhaust manifold pressures, engine speed, ignition firing position, throttle position, engine temperature, and so forth. Electrical signals representing these conditions are applied as inputs **50** to the control unit **48**. As is known in the art, the electronic control unit **48**, based on the multiple inputs **50**, electronically calculates the timing and metering of the fuel introduced into the combustion chamber **20** by the injection pump **38**.

Fuel is supplied to the fuel injector unit **38** by a feed pump (not shown) through a fuel line **52** at a sufficiently high pressure to produce proper fuel flow and to prevent vapor formation in the fuel system during extended high-temperature operation. When the solenoid **44** is energized by the solenoid drive unit **46**, the valve **42** closes and, because the displacement of the plunger **54** is known, the fuel quantity injected is controlled solely by varying the injector pulse width, that is, the duration the valve **42** is held closed.

The injector pump **38** includes a piston type pumping plunger **54** actuated by a cam **56** having a cam follower surface or cam lobe **58** in engagement with the plunger **54**; the cam **56** is rotatable at engine crank shaft speed.

As shown in FIG. **3**, the cam **56** has a lift profile, as a function of crank angle, having a first linear portion **60** rising from a base circle **62** to a maximum lift of about ½ inch through an angular crank displacement of about 180°, and a second linear portion **64** dropping back to the base circle in about 60° of crank displacement.

FIG. **3** shows a fuel injection schedule for a single, exemplary operating condition, namely, wide open throttle for a Limited Temperature Cycle, four-cycle engine having a compression ratio of 18:1 and a peak temperature of about 3,300° R. The fuel injection schedule of FIG. **3** provides for two successive injections of fuel volumes A and B. As already explained, the fuel volumes A and B are functions only of the durations that the injector **38** is active, as determined by the electronic control unit **48**.

Usually, a fuel injection pump is driven at camshaft speed, that is, at one half engine crankshaft speed. Here, the pump is rotated at engine crankshaft speed with the embodiment shown in FIG. **2** having its cam lobe **58** starting its lift essentially at the beginning of the engine intake stroke (0°). This provides a first fuel injection volume (shown as A in FIG. **3**) during the intake stroke, similar to an Otto engine. The pump cam **56** completes its first rotation at the end of the engine compression stoke (360°). The next rotation of the pump cam **56** will inject the second fuel volume (volume B) during the power stroke in a manner which produces essentially constant temperature combustion.

Fuel volume A, comprising about 56% of the total fuel required for complete combustion of the process air, is injected during the intake stroke of the piston **18** between about 10° and 120° (engine crank angle) after top dead center. Substantially at the end of the compression stroke (360° or top dead center), the second volume, B, comprising the remaining 44% of the total amount of fuel required for complete combustion, is injected, such second injection terminating at about 60° after TDC, i.e., at about 420°. Ignition by the spark plug **34** in the example under consideration will typically be provided at 5° to 10° before top dead center.

The combustion of the fuel/air mixture based on injected volume A comprises a first combustion phase which, as in the standard Otto cycle, is a substantially constant volume process. The first combustion phase will, of course, comprise a very lean mixture which, in the absence of the second phase of combustion to be described, would tend to markedly reduce engine power. The combustion of fuel volume B takes place at substantially constant temperature, that is, isothermally, providing both power and efficiency. It has been determined that the temperature at which this second combustion phase takes place is limited and less than that which would be attained in a standard Otto cycle engine of even modest compression ratio, for example, 8:1 or 10:1. Thus, the limited temperature cycle of the present invention permits the designer to dramatically increase the compression ratio of an engine for a given fuel, for example, to as high as about 18:1, providing all of the advantages, including high efficiency and power output, derived from a high compression ratio engine without the thermal, detonation and emission penalties.

A majority of the fuel is pre-mixed, generally 50% to 90%, for constant volume combustion. This first process is combined with a second fuel portion supplied during the combustion process at a rate to, first, limit maximum pressure, and second, limit maximum cylinder temperature.

The engine cycle of the present invention has a higher thermal efficiency than a Carnot cycle with the same average temperature of heat input.

FIG. **4** shows three engine cycle diagrams (pressure-volume, temperature volume, and temperature-entropy) comparing examples of the limited temperature cycle of the present invention for two maximum combustion chamber temperatures (T_{max}), namely, 3,300° R and 4,300° R. The engine cycle of the first example (T_{max}=3,300° R) is defined by the points **1-2-3-4-5-1** in the diagrams of FIG. **4** and that of the second example (T_{max}=4,300° R) by the points **1-2-3'-4'-5'-1**. In FIG. **4**, path **1-2** is an **18:1** isentropic

compression and paths **2-3** and **2-3'** are constant volume combustion processes using, in the first example, 56% of the fuel necessary for complete combustion of the process air. Paths **3-4** and **3'-4'** are isothermal processes using, in the first example, the remaining 44% of the fuel. Paths **4-5** and **4'-5'** are isentropic expansion processes and paths **5-1** and **5'-1** are constant volume exhaust processes.

Using the ideal fuel/air analysis of FIGS. **5A-5C**, the conditions or states at each point for the two examples of FIG. **4** may be calculated as follows:

FIRST EXAMPLE

$CR = 18.0$ $T_{max} = 3300°$ R.

Point 1 – Initial Conditions at *BDC*, Intake Stroke:

$P1 = 14.7$ psia
$V1 = 50.3$ in^3
$T1 = 530°$ R.
$N = 2000$ RPM
$N_S = .95$
$F/A = .0416$
$M_a = 130$ lb/hr
$LHV = 18{,}300$ Btu/lb
$N_v = 100\%$
$NCOMB = 100\%$
where:
$P1$ = initial pressure
$V1$ = initial volume
$T1$ = initial temperature
N = engine speed
N_s = compression/expansion efficiency
F/A = fuel air ratio
Ma = air mass flow
LHV = fuel lower heating value
N_v = volumetric efficiency
$NCOMB$ = combustion efficiency
Nv = volumetric efficiency
$NCOMB$ = combustion efficiency

Point 2 - Following Isentropic Compression (Path 1-2):

$K_a = 1.37$
$C_{v(air)} = .186$ Btu/lbm – °R.

$$V2 = V1/CR = \frac{50.3}{18} = 2.79 \text{ in}^3$$

$$T2 = T1\left[\frac{\left(\frac{V1}{V2}\right)^{K-1} - 1}{N_s} + 1\right] =$$

$$530\left[\frac{(18^{.37}) - 1}{.95} + 1\right] = 1597° \text{ R.}$$

$$P2 = P1\left(\frac{V1}{V2}\right)^{K} = 14.7\,(18)^{1.37} = 771 \text{ psia}$$

$WC = C_v(T1 - T2) = .186(530 - 1597) = -198$ Btu/lbm

Point 3 - Following Limited Temp. Comb. @ Constant Volume (Path 2-3):

$T_3 = T\text{max} = 3300°$ R.

$$P3 = P2(T3/T2) = (771)\left(\frac{3300}{1597}\right) = 1593 \text{ psia}$$

$C_v(ex) = .242$ Btu/lbm° R.
$V3 = V2 = 2.79$ in^3
$Q_{cv} = C_v(T3 - T2) = .242(3300 - 1597) = 412$ Btu/lbm
$M_f = F/A(Ma) = (.0416)(130) = 5.408$ lb/hr
$Q_{tot} = (M_f)(LHV) = (5.408)(18{,}300) = 98.966$ Btu/hr

$$Q_{\frac{cycle}{ex}} = \frac{(N_c)(QTOT)}{(1 + OFAR)(TMA)} =$$

$$\frac{(1.0)(98{,}966)}{(1.0416)(130)} = 731 \text{ Btu/lbm}$$

$Q_{cv}/Q_{cycle} = 412/731 = 56.4\%$ ← % of comb at *c.v.*

Point 4 - Following Constant Temperature

-continued

Combustion and Expansion (Path 3-4):

$Q_{ct} = Q_{cycle} - Q_{cv} = 731 - 412 = 319$ Btu/lbm ← (43.6% at *C.T.*
$T4 = T3 = 3300°$ R.

$$V4 = (V3)\,e^{\left(Q_{ct}\frac{J}{RT4}\right)} = (2.79)e^{\frac{(319)(778)}{(53.4)(3300)}} = 11.41 \text{ in}^3$$

$$P4 = P3\left(\frac{V3}{V4}\right) = 1593\left(\frac{2.79}{11.41}\right) = 389 \text{ psia}$$

$$W_{CTE} = \frac{(R)(T4)}{J}\left(\ln\frac{P3}{P4}\right)N_T =$$

$$\frac{(53.4)(3300)}{778}\ln\left(\frac{1593}{389}\right)(.95) = 303 \text{ Btu/lbm}$$

Point 5 - Following Isentropic Expansion (Path 4-5):

$K_{ex} = 1.26$
$C_{pex} = .325$
$C_{vex} = .25$
$V_5 = V_1 = 50.3$ in^3

$$T5 = T4\left[1 - N_s\left(1 - \left(\frac{V4}{V5}\right)^{K-1}\right)\right] =$$

$$3300\left[1 - .95\left(1 - \frac{11.41^{1.26-1}}{50.3}\right)\right] = 2297° \text{ R.}$$

$$P5 = P4\left(\frac{V4}{V5}\right)^{Kex} = 389\left(\frac{11.41}{50.3}\right)^{1.26} = 60 \text{ psia}$$

$W_{EX} = C_v(T4 - T5) = .25(3300 - 2297) = 251$ Btu/lbm

Performance Summary of Cycle of First Example:

$W_{net} = WC - WEXT + WEX = -198 + 303 + 251 =$

356 Btu/lbm

$$IHP = \frac{(1 + F/A)(Ma)(W_{net})}{2545} =$$

$$\frac{(1.0416)(130)(356)}{2545} = 18.94 \text{ HP}$$

$$IMEP = \frac{(792{,}000)(IHP)}{(N)(V1 - V2)} =$$

$$\frac{(792000)(18.94)}{(2000)(50.3 - 2.79)} = 158 \text{ psia}$$

$$N_{cyc} = \frac{W_{net}}{Q_{tot}} = \frac{356}{731} = 48.7\%$$

Point 1 - Initial Conditions at *BDC*, Intake Stroke:

Same as first example.

Point 2 - Following Isentropic Compression (Path 1-2):

Same as first example.

Point 3' - Following Limited Temp. Comb. @ Constant Volume (Path 2-3'):

$T_{3'} = T\text{max} = 4300°$ R.

$$P3' = P2(T3'/T2) = (771)\left(\frac{4300}{1597}\right) = 2076 \text{ psia}$$

$C_v(exh) = .242$ Btu/lbm° R.
$V3' = V2 = 2.79$ in^3
$Q_{cv} = C_v(T3' - T2) = .242(4300 - 1597) = 654$ Btu/lbm
$M_f = F/A(Ma) = (0.416)(130) = 5.408$ lb/hr

Point 1 - Initial Conditions at *BDC*, Intake Stroke:

Same as first example.

Point 2 - Following Isentropic Compression (Path 1-2):

-continued

Same as first example.

Point 3' - Following Limited Temp. Comb. @ Constant Volume (Path 2-3'):

$T_{3'} = T\max = 4300°$ R.

$$P3' = P2(T3'/T2) = (771)\left(\frac{4300}{1597}\right) = 2076 \text{ psia}$$

$C_v(exh) = .242$ Btu/lbm° R.
$V3' = V2 = 2.79$ in^3
$Q_{cv} = C_v(T3' - T2) = .242(4300 - 1597) = 654$ Btu/lbm
$M_f = F/A(Ma) = (0.416)(130) = 5.408$ lb/hr
$Q_{tot} = (M_f)(LHV) = (5.408)(18{,}300) = 98.966$ Btu/hr

$$Q_{\frac{cycle}{ex}} = \frac{(N_c)(QTOT)}{(1 + OFAR)(TMA)} =$$

$$\frac{(1.0)(98{,}966)}{(1.0416)(130)} = 731 \text{ Btu/lbm}$$

$Q_{cv}/Q_{cycle} = 654/731 = 89.5\%$ ← % of comb at c.v.

Point 4' - Following Constant Temperature Combustion and Expansion (Path 3'-4'):

$Q_{ct} = Q_{cycle} - C_{cv} = 731 - 654 = 77$ Btu/lbm ← (10.5% at C.T.)
$T4' = T3' = 4300°$ R.

$$V4' = (V3')\,e^{\left(\frac{Q_{ctJ}}{RT4'}\right)} = (2.79)e^{\frac{(77)(778)}{(53.4)(4300)}} = 3.62 \text{ in}^3$$

$$P4' = P3'\left(\frac{V3'}{V4'}\right) = 2076\left(\frac{2.79}{3.62}\right) = 1600 \text{ psia}$$

$$W_{CTE} = \frac{(R)(T4')}{J}\left(\ln\frac{P3'}{P4'}\right)N_T =$$

$$\frac{(53.4)(4300)}{778}\ln\left(\frac{2076}{1600}\right)(.95) = 72.9 \text{ Btu/lbm}$$

Point 4' - Following Isen Temperature Combustion and Expansion (Path 3'-4'):

$Q_{ct} = Q_{cycle} - C_{cv} = 731 - 654 = 77$ Btu/lbm ← (10.5% at C.T.)
$T4' = T3' = 4300°$ R.

$$V4' = (V3')\,e^{\left(\frac{Q_{ctJ}}{RT4'}\right)} = (2.79)e^{\frac{(77)(778)}{(53.4)(4300)}} = 3.62 \text{ in}^3$$

$$P4' = P3'\left(\frac{V3'}{V4'}\right) = 2076\left(\frac{2.79}{3.62}\right) = 1600 \text{ psia}$$

$$W_{CTE} = \frac{(R)(T4')}{J}\left(\ln\frac{P3'}{P4'}\right)N_T =$$

$$\frac{(53.4)(4300)}{778}\ln\left(\frac{2076}{1600}\right)(.95) = 72.9 \text{ Btu/lbm}$$

Point 5' - Following Isentropic Expansion (Path 4'-5'):

$K_{ex} = 1.26$
$C_{pex} = .325$
$C_{vex} = .25$
$V_{5'} = V_1 = 50.3$ in^3

$$T5' = T4'\left[1 - N_s\left(1 - \left(\frac{V4'}{V5'}\right)^{K-1}\right)\right] =$$

-continued

$$4300\left[1 - .95\left(1 - \frac{3.62^{1.26-1}}{50.3}\right)\right] = 2.275° \text{ R.}$$

$$P5' = P4'\left(\frac{V4'}{V5'}\right)^{Kex} = 1600\left(\frac{3.62}{50.3}\right)^{1.26} = 58 \text{ psia}$$

$$W_{EX} = C_v(T4' - T5') = .25(4300 - 2275) = 506 \text{ Btu/lbm}$$

Performance Summary of Cycle of Second Example:

$W_{net} = WC + WEXT + WEX = -198 + 72.9 + 506 =$

381 Btu/lbm

$$IHP = \frac{(1 + F/A)(Ma)(W_{net})}{2545} =$$

$$\frac{(1.0416)(130)(3.81)}{2545} = 20.27 \text{ HP}$$

$$IMEP = \frac{(792{,}000)(IHP)}{(N)(V1 - V2)} =$$

$$\frac{(792000)(20.27)}{(2000)(50.3 - 2.79)} = 169 \text{ psia}$$

$$N_{cyc} = \frac{W_{net}}{Q_{tot}} = \frac{381}{731} = 52\%$$

In another embodiment of the invention, the fuel supplied for the isochoric event may be an amount which will produce a temperature of the working fluid of around 4,000 degrees Rankine, somewhat less than that produced by unconstrained combustion, with the remainder of the fuel supplied proportional to the increase in volume during the power stroke, to produce essentially isothermal combustion. This embodiment will produce high power, while avoiding detonation at higher compression ratios.

FIG. **6** shows plots for two maximum combustion temperatures (3,300° R and 4,000° R), of percent fuel supplied for constant temperature combustion as a function of compression ratios ranging from 8:1 to 24:1.

FIG. **7** is a plot of heat release rate as a function of engine crankshaft angle for a maximum combustion temperature of 3,300° R (First Example, above). A first portion **70** of this plot shows the heat release rate for the constant volume process (path **2-3** in FIG. **4**). A second portion **72** of the plot shows the heat release rate for the isothermal process (path **3-4** in FIG. **4**).

With reference again to FIG. **3**, it will be evident to those skilled in the art that the invention may be applied to two cycle engines simply by scheduling the first injection (volume A) to take place at the beginning of the compression stroke and the second injection (volume B) to take place as in the four cycle engine. In the two cycle application, the active portion of the cam lobe must extend from the beginning of the compression stroke to the end of the isothermal combustion process. Since this is an extended duration with a significant non-utilized portion of the lift ramp, a constant radius portion on the cam can be used to avoid excessively high total cam lobe dimensions.

Instead of a fuel injection pump (as shown in FIG. **2**) those skilled in the art will understand that a solenoid-controlled unit injector can be used or, as a further alternative, a common rail fuel injection system, fed by a constant-flow, high-pressure pump, can be utilized with the injectors independently controlled by solenoids. Still further, it will be obvious to those skilled in

the art that piezoelectric actuators may be substituted for the solenoids where very short injector energization times (that is, small fuel quantities) are required. Piezoelectric actuators may also be utilized to provide a higher degree of control over injection since such injectors may be used to inject multiple discrete quantities with the result that the process will more closely follow the ideal isothermal process paths. In accordance with yet another alternative, a piezoelectric device may be substituted for the pump plunger in a unit injector, thus eliminating the requirement for a cam to actuate the injector. To make such an application of a piezoelectric actuator practical, the piezoelectric device would be actuated multiple times (for example, 100 times) by the electronic control unit in order to inject the required total fuel quantities with a practical size piezoelectric element.

It will also be appreciated that the process diagrams of FIG. **4** show ideal processes. Real engine paths will depart to some extent from the ideal cycles shown due to timing, heat and friction losses. These factors will manifest themselves in the cycle diagram as, for example, rounded corners and displacements of the process lines.

To practice the present invention, it is also possible to combine a standard carburetor fuel introduction system with an injector. With reference to the example of FIG. **3**, with such a system, the carburetor would supply the first quantity (volume A) and the injector would supply the second quantity (volume B). The use of an injector for introducing both fuel charges is preferred, however, to minimize cost.

The invention can also be put into practice in combination with existing Otto, Diesel, lean-burn or stratified charge engine processes in the same engine at different loads or different operating conditions.

In some applications there will be a value to limiting maximum cylinder pressure. In that instance, the invention can make use of a further embodiment: a combination of constant volume combustion, constant pressure combustion, and constant temperature combustion. In this embodiment of the invention, heat is released during the constant volume process in such an amount as to reach the preferred pressure limit. Heat is then added at constant pressure until the preferred maximum temperature is reached. The remaining heat is added isothermally. An example of such an embodiment is shown in the process diagrams of FIG. **8**. An engine operated in accordance with this embodiment will include, with reference to FIG. **8**, the following process paths: path **1-2** is an isothermal compression process during which fuel is supplied. The fuel supplied early in the compression process serves two purposes: first, the heat of vaporization reduces the work of compression, second the combustion temperature is reduced proportional to the cooling provided by the fuel, and third, the early injection allows time for preflame reactions to take place prior to the ignition time, thus reducing ignition lag (a significant problem for Diesel or other predominantly direct injection hybrid systems). Path **2-3** is an isentropic compression process, as already explained; path **3-4** is an isochoric combustion process with maximum pressure limited to a preselected value by proportioning fuel quantity A (FIG. **3**); path **4-5** is a constant pressure, i.e, isobaric, process provided by a first portion of fuel fraction B (FIG. **3**), said portion being of an amount so as to continue isobaric combustion until the preselected maximum combustion temperature is reached; path **5-6** is an isothermal combustion process at the preselected maximum combustion temperature; path **6-7** is an isentropic expansion process; and path **7-1** is an isochoric exhaust process. Each of the fuel introductions can comprise one or more discrete quantities so as to follow the ideal processes as closely as practicable.

With reference once again to FIG. **3**, an additional embodiment of the invention can be put into practice by subdividing the first fraction (volume A) of the total fuel quantity into one or more discrete injected fuel portions. For example, if two such portions were used, these would be designated portions A′ and A″, the sum of these two portions equalling the volume A. In accordance with one example of this embodiment, the first fuel portion A′, comprising 40% of the total fuel, would be injected during the interval from 10° to 80° of engine crank shaft rotation and the second fuel portion A″, comprising 16% of the total fuel, would be injected during the interval from 320° to 350° of engine crank rotation. This embodiment provides a chemically correct fuel/air mixture surrounding the spark plug for the first phase of combustion serving to extend the lean misfire limit as well as further reducing the creation of NO_x by avoiding the presence of unburned oxygen in the first combustion phase.

It will also be understood that the invention can be used with various fuels such as natural gas, diesel, gasoline and methanol, as well as with multiple fuels including, for example, a combination of natural gas for the constant volume heat release process and diesel fuel for the isothermal heat release process.

What is claimed is:

1. A method of operating an internal combustion expanding chamber piston engine for providing limited temperature combustion, said engine having (1) at least one cylinder and an associated piston for forming a combustion chamber, said piston having a top dead center position, (2) an operating cycle including an intake stroke, a compression stroke and an expansion stroke, and (3) a fuel introduction system, said method comprising the steps of:

forming a predetermined fuel/air mixture by introducing a predetermined fraction of the total fuel required for complete combustion of the process air in the combustion chamber;

igniting said fuel/air mixture when the piston is substantially at top dead center; and

introducing substantially at the beginning of the expansion stroke, a second fraction of the total fuel required for complete combustion,

wherein the combustion of the fuel/air mixture resulting from the fuel first introduced is a substantially constant volume process; and

wherein the combustion as a result of the introduction of the second fraction is a substantially isothermal process.

2. A method, as defined in claims **1**, in which:

the fuel is introduced by direct injection.

3. A method, as defined in claim **1**, wherein:

the first mentioned predetermined fraction of the total fuel is introduced during the compression stroke to provide an isothermal compression process.

4. A method, as described in claim **3**, wherein:

the combustion of said first mentioned predetermined fraction is limited to a preselected maximum pressure; and wherein,

the second fraction of the total fuel is supplied so as to provide, first, constant pressure combustion until a preselected maximum combustion temperature is reached, and secondly, isothermal combustion at said preselected maximum temperature.

5. A spark ignition internal combustion engine including a combustion chamber, said engine having an operating cycle including a heat input phase comprising a substantially constant volume combustion process followed by a substantially isothermal combustion process.

6. A spark ignition internal combustion engine, as defined in claim **5**, including means for injecting fuel directly into said combustion chamber in phase relationship to provide said substantially constant volume and substantially isothermal combustion processes.

7. A spark ignition internal combustion engine, as defined in claim **6**, including:

means operatively associated with said fuel injecting means for controlling injection scheduling, timing and rate, said controlling means being adapted to provide:

(1) a first injection, made up of one or more discrete quantities, comprising a predetermined fraction of the total of fuel required for complete combustion of the process air, combustion of said first injected amount of fuel comprising said substantially constant volume combustion process; and

(2) a second injection, made up of one or more discrete quantities, comprising a second fraction of the total fuel necessary for said complete combustion, combustion of said second injected amount of fuel comprising said substantially isothermal combustion process.

8. A spark ignition internal combustion engine, as defined in claim **7**, in which:

said second fraction comprises the remainder of the total fuel necessary for complete combustion.

* * * * *

EXHIBIT B

US006058904A

United States Patent [19]

Kruse

[11] **Patent Number: 6,058,904**

[45] **Date of Patent: *May 9, 2000**

[54] **INTERNAL COMBUSTION ENGINE WITH LIMITED TEMPERATURE CYCLE**

[75] Inventor: **Douglas C. Kruse**, Burbank, Calif.

[73] Assignee: **Kruse Technology Partnership**, Chatsworth, Calif.

[*] Notice: This patent issued on a continued prosecution application filed under 37 CFR 1.53(d), and is subject to the twenty year patent term provisions of 35 U.S.C. 154(a)(2).

This patent is subject to a terminal disclaimer.

[21] Appl. No.: **08/685,651**

[22] Filed: **Jul. 24, 1996**

Related U.S. Application Data

[63] Continuation of application No. 08/466,817, Jun. 6, 1995, Pat. No. 5,566,650, which is a continuation of application No. 08/146,832, Oct. 29, 1993, Pat. No. 5,460,128, which is a continuation of application No. 07/919,916, Jul. 27, 1992, Pat. No. 5,265,562

[60] Provisional application No. 60/001,617, Jul. 28, 1995.

[51] **Int. Cl.**[7] **F02B 1/14**; F02B 41/00; F02D 41/26

[52] **U.S. Cl.** **123/295**; 123/299

[58] **Field of Search** 123/299, 295; 60/602; 251/61.5

[56] **References Cited**

U.S. PATENT DOCUMENTS

2,917,031	12/1959	Nestorovic	123/299
3,125,076	3/1964	Mullaney	123/32
3,266,234	8/1966	Cook	60/13
4,070,998	1/1978	Grow	123/26
4,254,625	3/1981	Bergtedt et al.	60/602
4,704,999	11/1987	Hashikawa et al.	123/299
4,798,184	1/1989	Palko	123/299
4,836,161	6/1989	Abthoff et al.	123/299
4,854,279	8/1989	Seno	123/204
4,858,579	8/1989	Elsbett et al.	123/299
4,862,859	9/1989	Yunick	123/545
4,913,113	4/1990	Baranescu	123/300
4,977,875	12/1990	Kumagai et al.	123/299
5,101,785	4/1992	Ito	123/299
5,265,562	11/1993	Kruse	123/27 R
5,460,128	10/1995	Kruse	123/27 R
5,566,650	10/1996	Kruse	123/27 R

FOREIGN PATENT DOCUMENTS

0492055	7/1992	European Pat. Off. .
2507142	9/1976	Germany .

Primary Examiner—Willis R. Wolfe
Assistant Examiner—Hieu T. Vo
Attorney, Agent, or Firm—Fulwider Patton Lee & Utecht, LLP

[57] **ABSTRACT**

An expandable chamber piston type internal combustion engine operating in an open thermodynamic cycle includes a combustion process having a constant volume (isochoric) phase followed by a constant temperature (isothermal) phase.

10 Claims, 9 Drawing Sheets

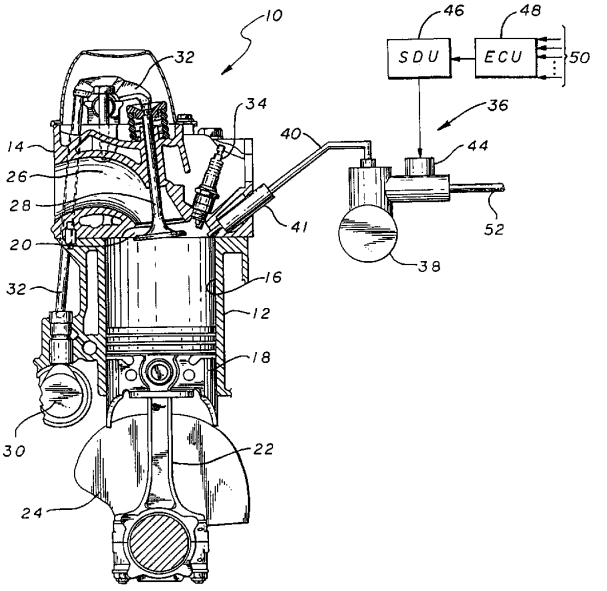

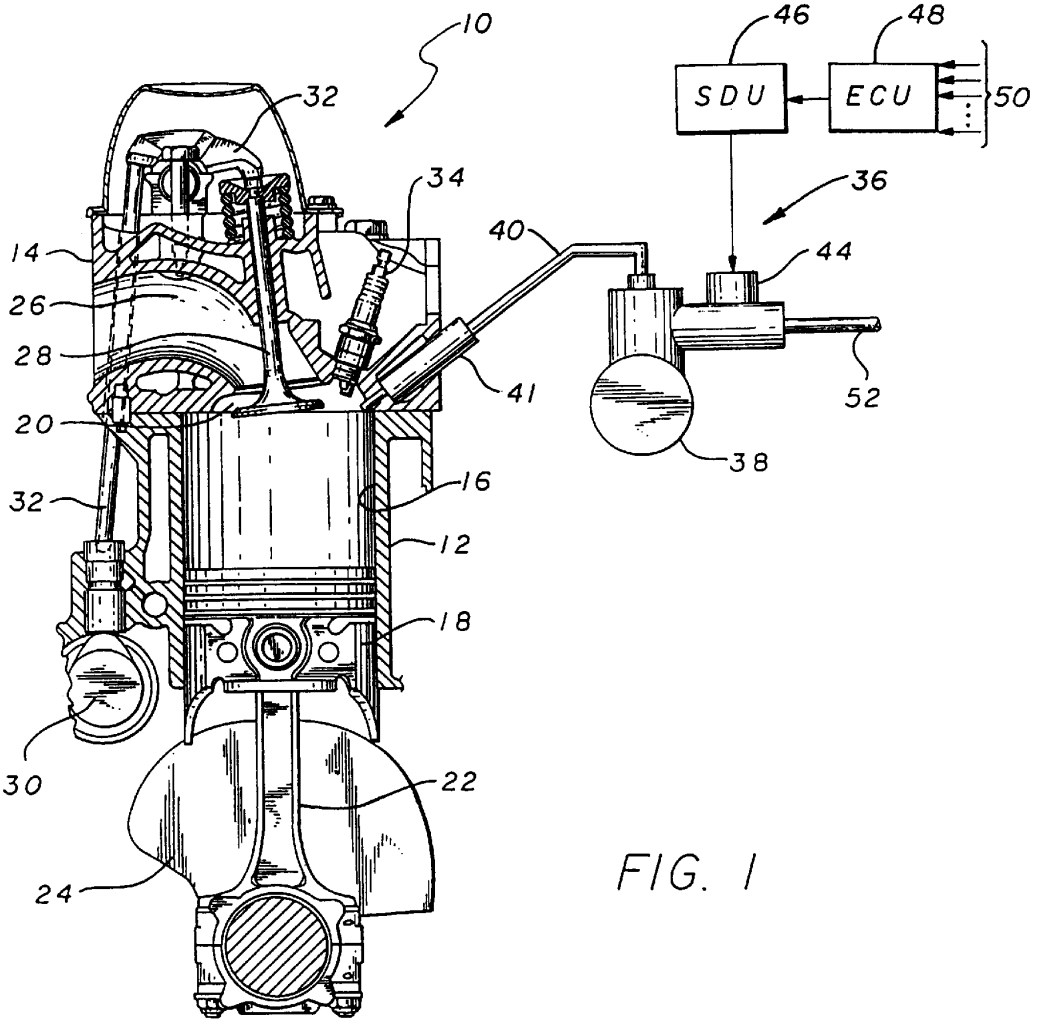
10
46
48
SDU
ECU
50
32
34
36
40
14
44
26
28
41
52
20
38
32
16
12
18
30
22
24

FIG. 1

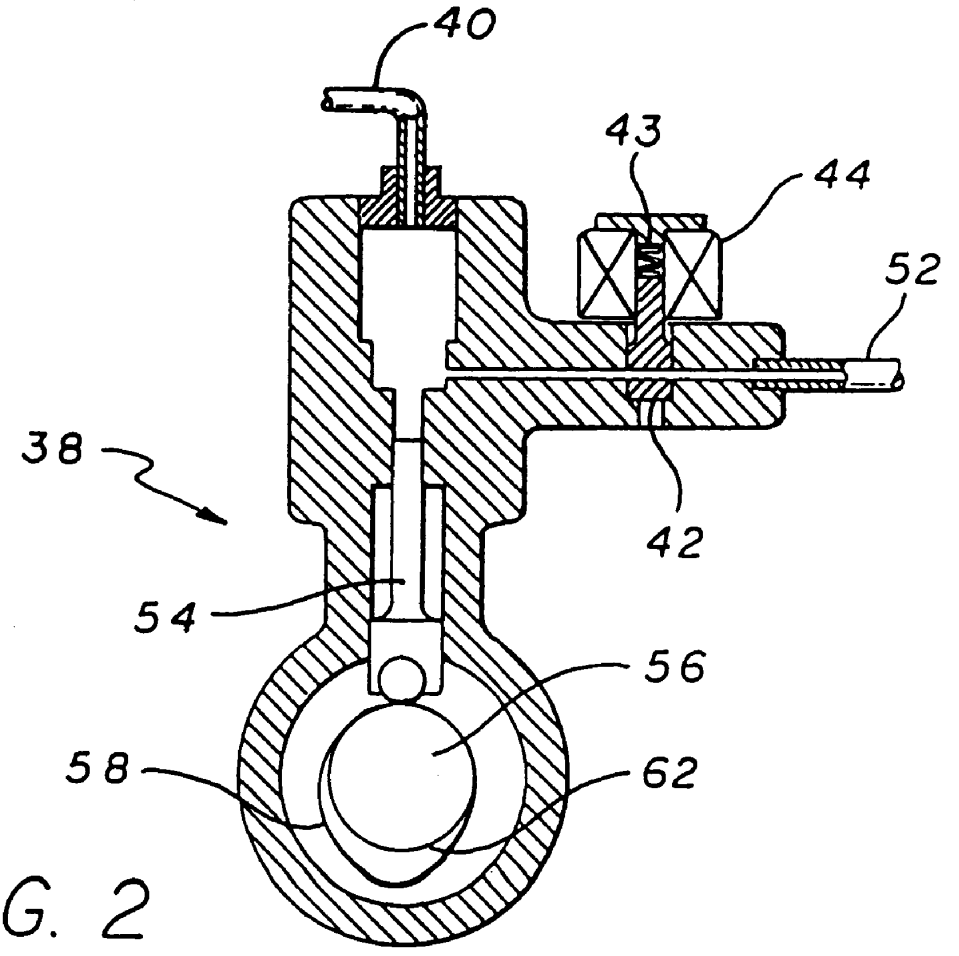

FIG. 2

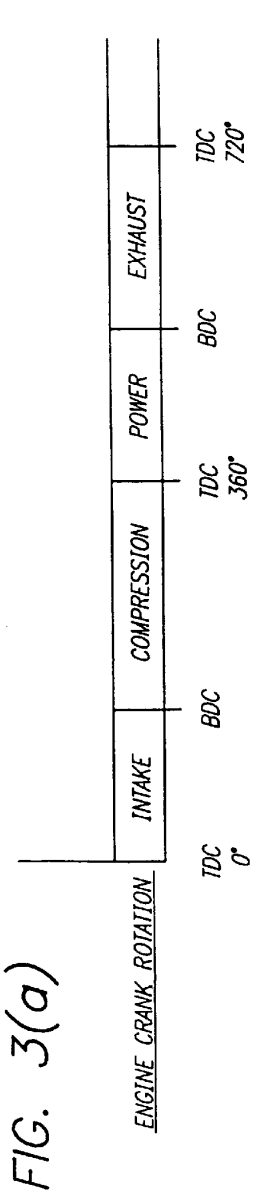

FIG. 3(a)

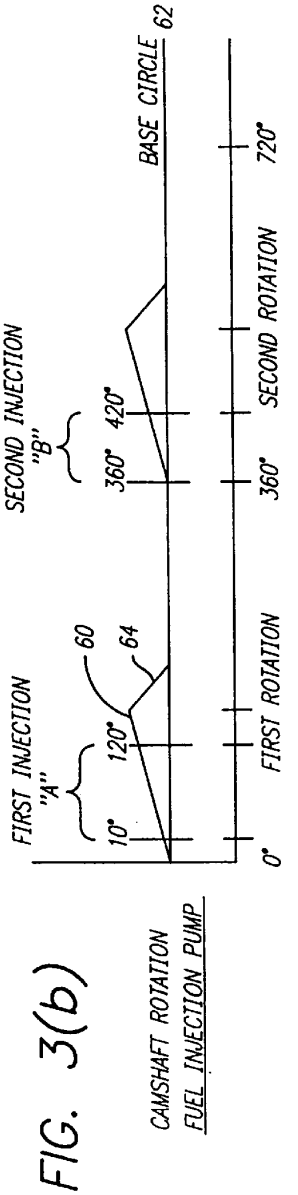

FIG. 3(b)

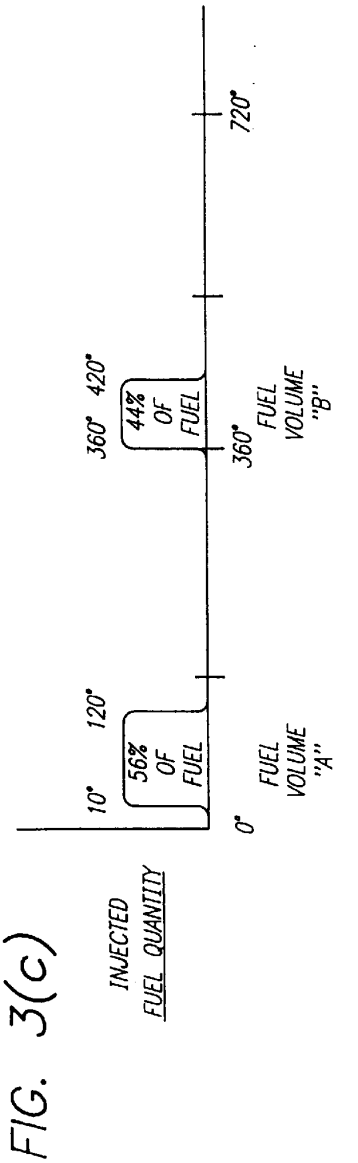

FIG. 3(c)

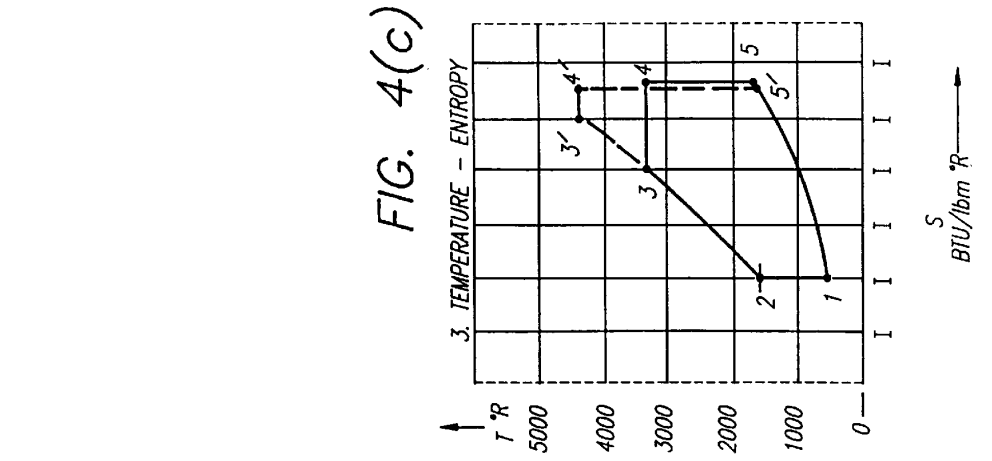

FIG. 4(c)

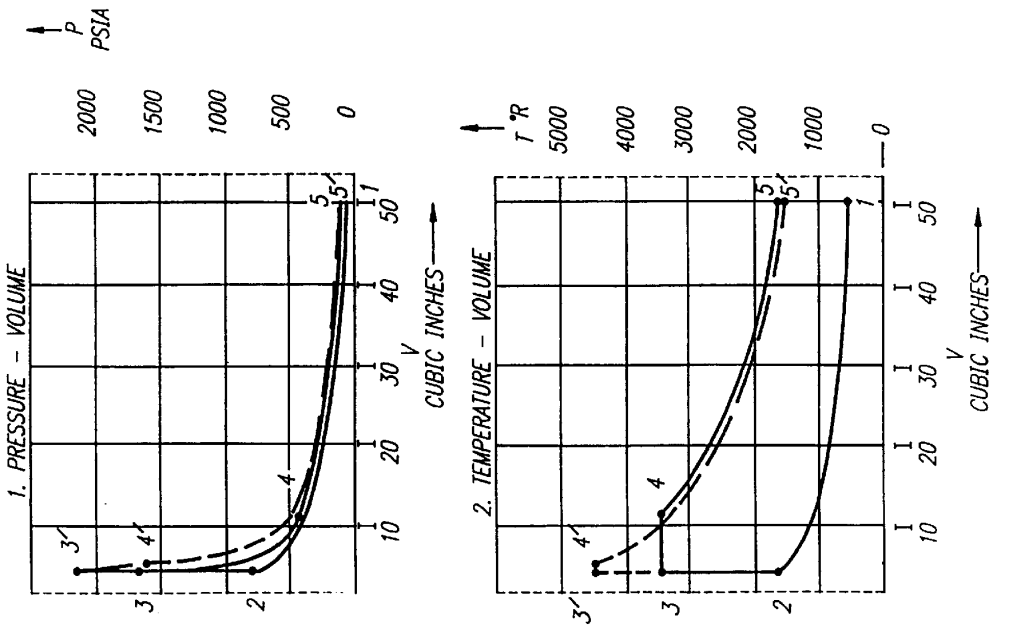

FIG. 4(b)

FIG. 4(a)

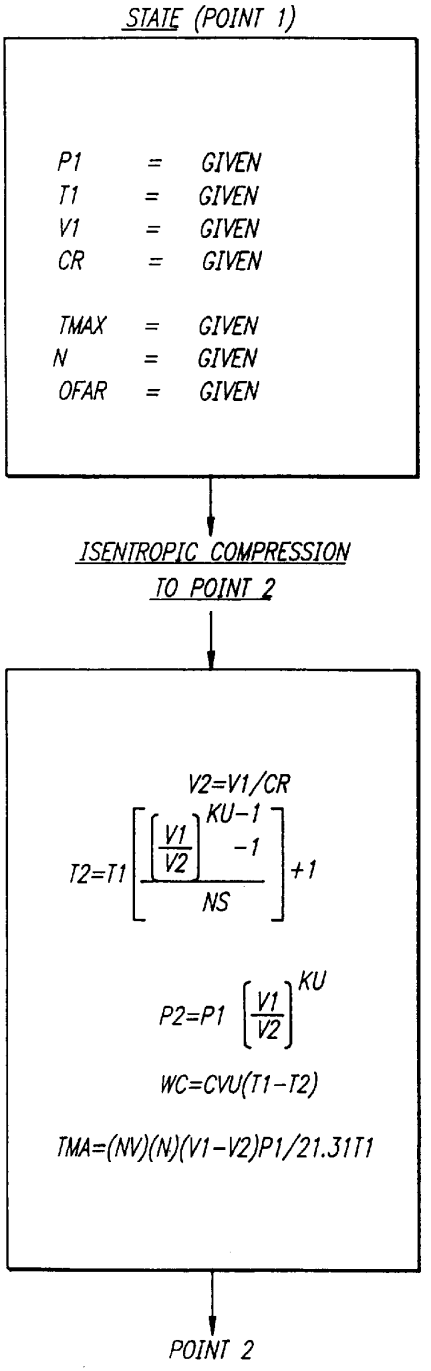

P1	=	INITIAL CYL. PRESSURE AT BDC INTAKE STR, PSIA
T1	=	INITIAL FLUID TEMP AT BDC INTAKE STR, °R
V1	=	INITIAL CYL. VOLUME AT BDC INTAKE STR, IN^3
CR	=	CYCLE COMPRESSION RATIO
TMAX	=	MAXIMUM CYCLE TEMPERATURE, °R
N	=	ENGINE SPEED, RPM
OFAR	=	OVERALL FUEL-TO-AIR RATIO

P2	=	CYL. PRESSURE AT TDC COMPR STR, PSIA
T2	=	FLUID TEMP AT TDC COMPR STR, °R
V2	=	CYL. VOLUME AT TDC COMPR STR, IN^3
KU	=	RATIO OF SPECIFIC HEATS, UNBURNED MIXTURE
NS	=	ISENTROPIC EFFICIENCY
NV	=	CYCLE VOLUMETRIC EFFICIENCY
WC	=	COMPRESSION WORK, BTU/lbm
CVU	=	SPECIFIC HEAT, CONSTANT VOLUME, UNBURNED MIXTURE, BTU/lbm °R
TMA	=	TOTAL MASS AIRFLOW, lb/hr

FIG. 5A

FIG. 5B

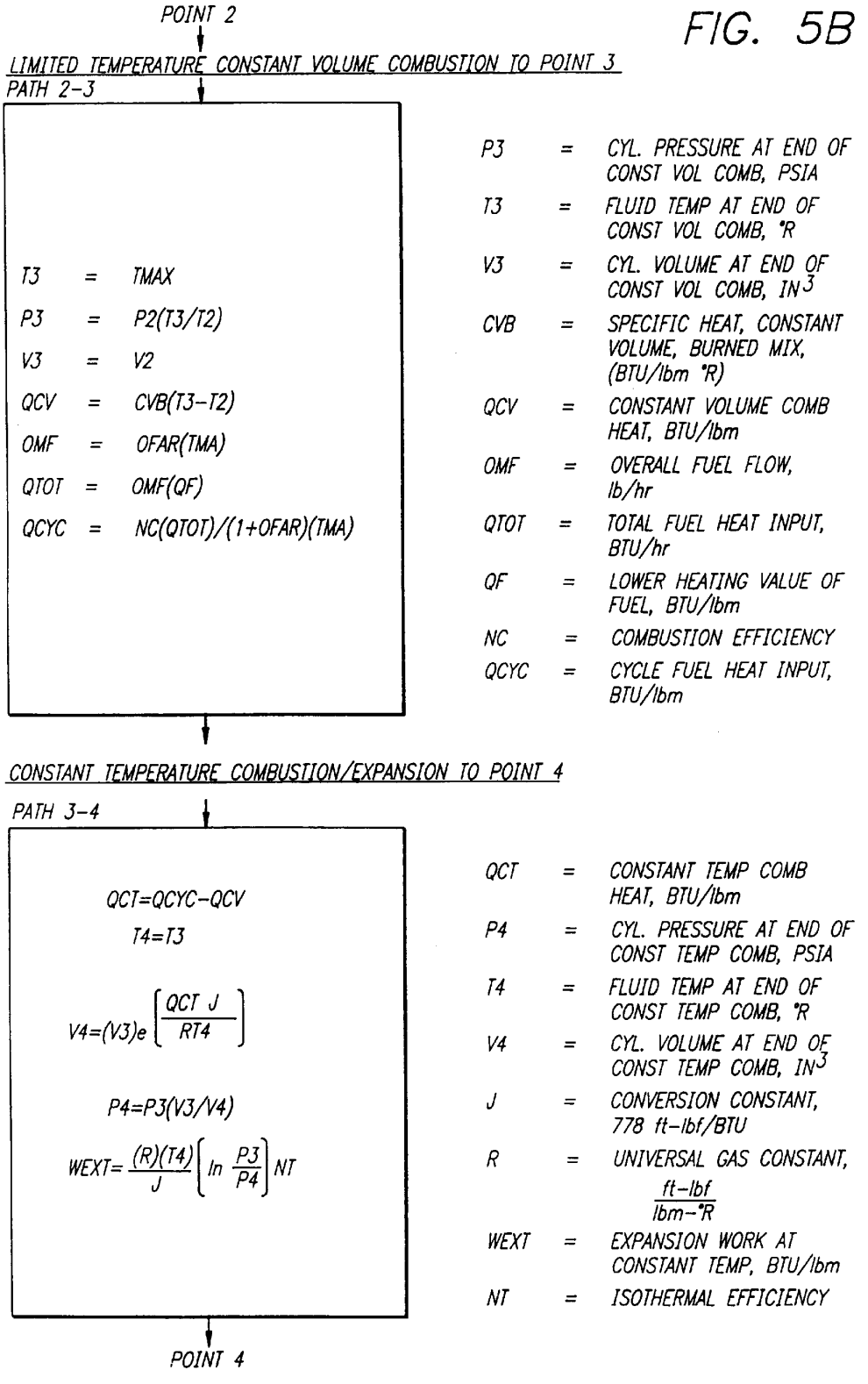
POINT 2
LIMITED TEMPERATURE CONSTANT VOLUME COMBUSTION TO POINT 3
PATH 2-3
T3 = TMAX
P3 = P2(T3/T2)
V3 = V2
QCV = CVB(T3-T2)
OMF = OFAR(TMA)
QTOT = OMF(QF)
QCYC = NC(QTOT)/(1+OFAR)(TMA)
P3 = CYL. PRESSURE AT END OF CONST VOL COMB, PSIA
T3 = FLUID TEMP AT END OF CONST VOL COMB, °R
V3 = CYL. VOLUME AT END OF CONST VOL COMB, IN3
CVB = SPECIFIC HEAT, CONSTANT VOLUME, BURNED MIX, (BTU/lbm °R)
QCV = CONSTANT VOLUME COMB HEAT, BTU/lbm
OMF = OVERALL FUEL FLOW, lb/hr
QTOT = TOTAL FUEL HEAT INPUT, BTU/hr
QF = LOWER HEATING VALUE OF FUEL, BTU/lbm
NC = COMBUSTION EFFICIENCY
QCYC = CYCLE FUEL HEAT INPUT, BTU/lbm
CONSTANT TEMPERATURE COMBUSTION/EXPANSION TO POINT 4
PATH 3-4
QCT=QCYC-QCV
T4=T3
V4=(V3)e[QCT J / RT4]
P4=P3(V3/V4)
WEXT=(R)(T4)/J [ln P3/P4] NT
QCT = CONSTANT TEMP COMB HEAT, BTU/lbm
P4 = CYL. PRESSURE AT END OF CONST TEMP COMB, PSIA
T4 = FLUID TEMP AT END OF CONST TEMP COMB, °R
V4 = CYL. VOLUME AT END OF CONST TEMP COMB, IN3
J = CONVERSION CONSTANT, 778 ft-lbf/BTU
R = UNIVERSAL GAS CONSTANT, ft-lbf / lbm-°R
WEXT = EXPANSION WORK AT CONSTANT TEMP, BTU/lbm
NT = ISOTHERMAL EFFICIENCY
POINT 4

FIG. 5C

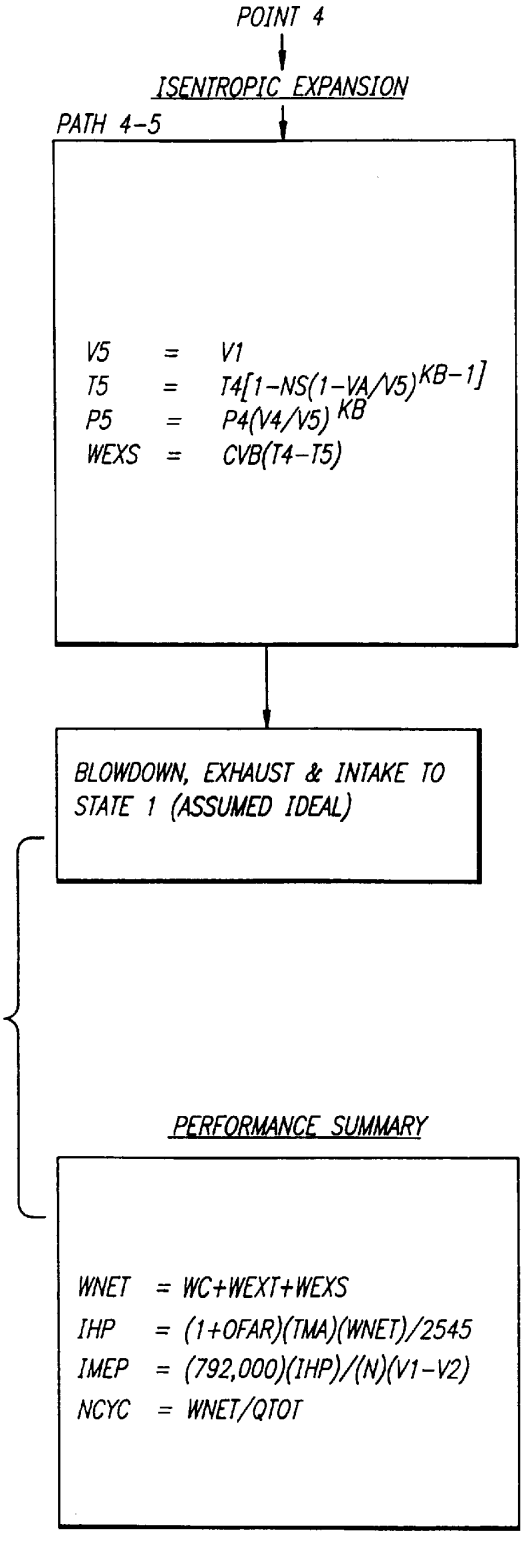

P5 = CYL. PRESSURE AT END OF ISENTROPIC EXP, PSIA

T5 = FLUID TEMP AT END OF ISENTROPIC EXP, °R

V5 = CYL. VOLUME AT END OF ISENTROPIC EXP, IN^3

KB = RATIO OF SPECIFIC HEATS, BURNED MIXTURE

WEXS = EXPANSION WORK, ISENTROPIC, BTU/lbm

CVB = SPECIFIC HEAT, CONSTANT VOLUME, BURNED MIX, BTU/lbm °R

WNET = NET INDICATED WORK, BTU/lbm

IHP = INDICATED HP (PER CYLINDER)

IMEP = INDICATED MEAN EFFECTIVE PRESSURE, PSIA

NCYC = INDICATED CYCLE EFFICIENCY

FIG. 6

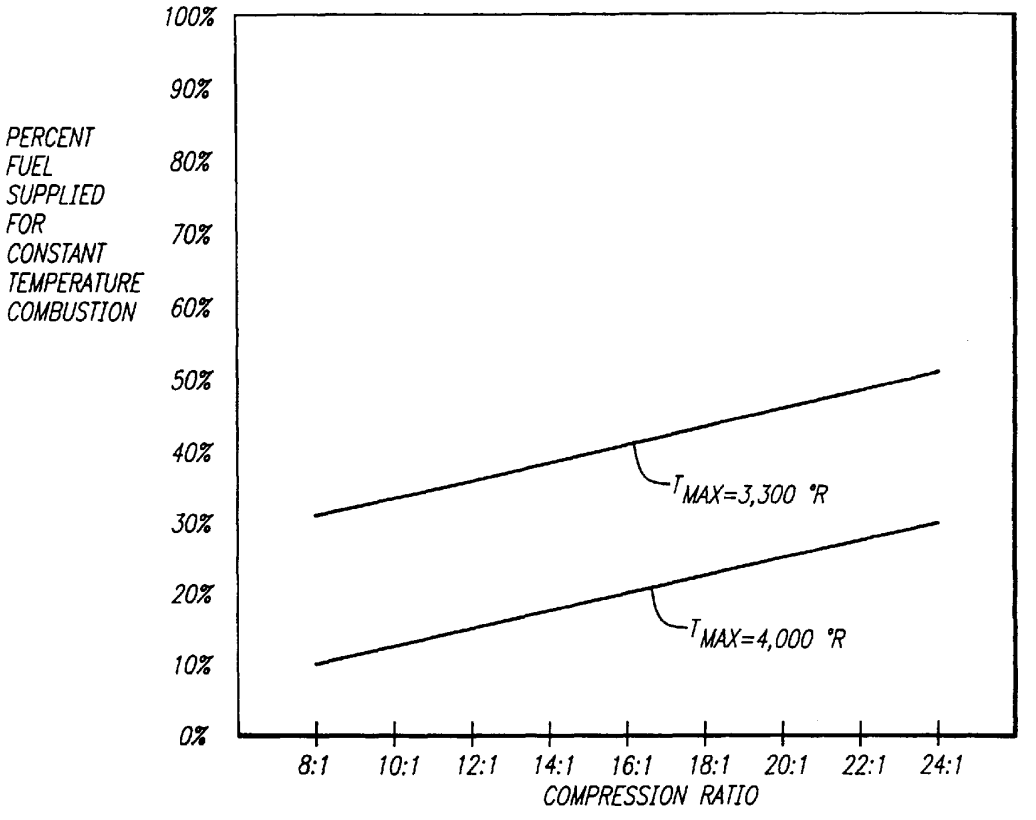
PERCENT FUEL SUPPLIED FOR CONSTANT TEMPERATURE COMBUSTION
100%
90%
80%
70%
60%
50%
40%
30%
20%
10%
0%
T_{MAX}=3,300 °R
T_{MAX}=4,000 °R
8:1
10:1
12:1
14:1
16:1
18:1
20:1
22:1
24:1
COMPRESSION RATIO

FIG. 7

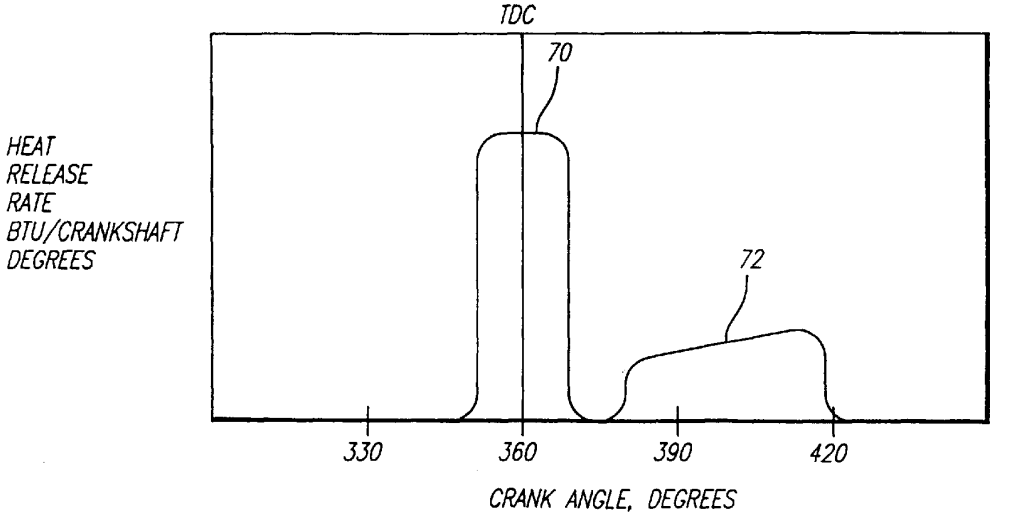
HEAT RELEASE RATE BTU/CRANKSHAFT DEGREES
TDC
70
72
330
360
390
420
CRANK ANGLE, DEGREES

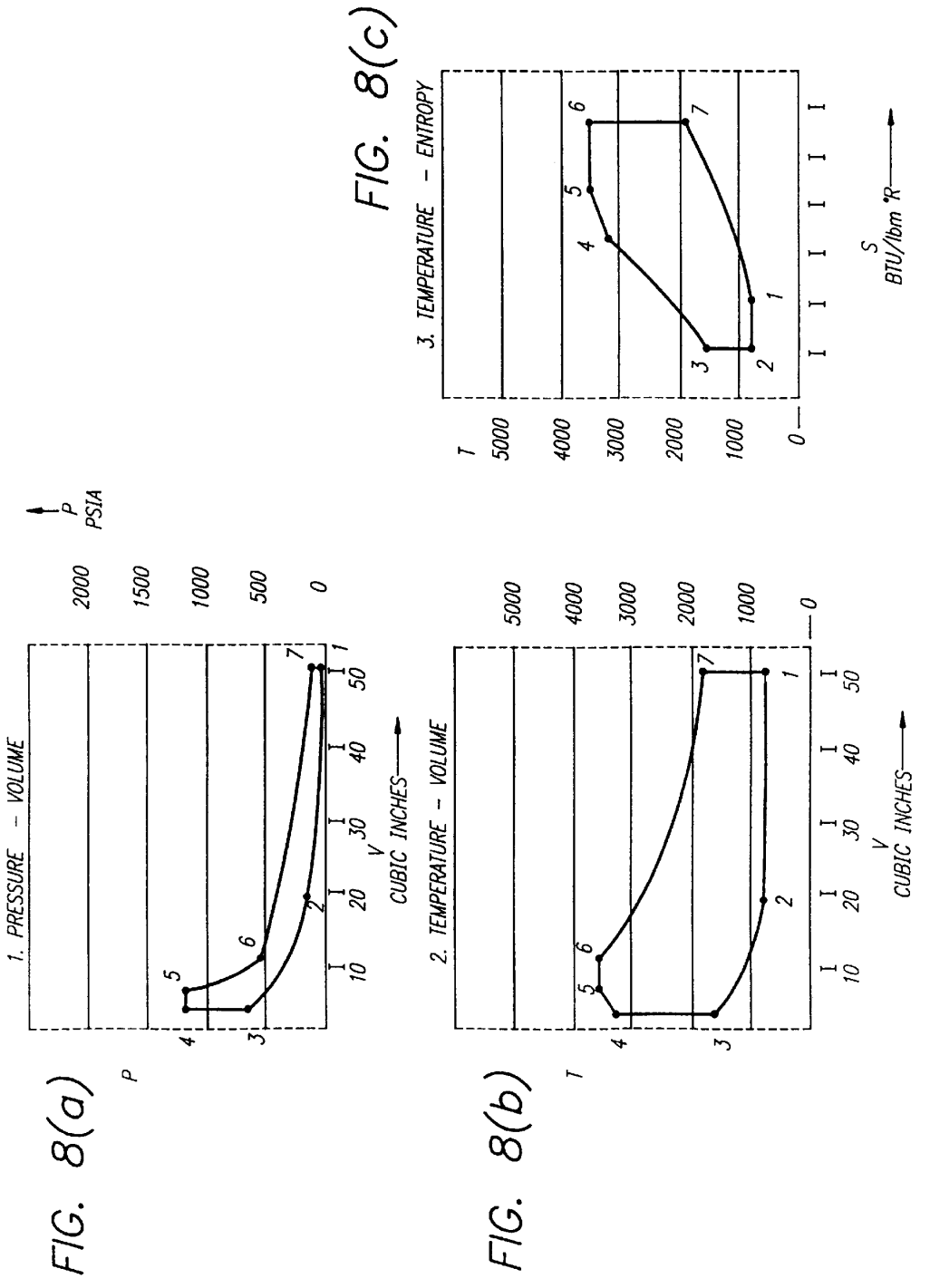

FIG. 8(a)

FIG. 8(b)

FIG. 8(c)

INTERNAL COMBUSTION ENGINE WITH LIMITED TEMPERATURE CYCLE

REFERENCE TO RELATED APPLICATIONS

This application is a continuation of and claims the benefit of U.S. application Ser. No. 08/466,817, filed Jun. 6, 1995, now U.S. Pat. No. 5,566,650, which is a continuation of application Ser. No. 08/146,832, filed Oct. 29, 1993, now U.S. Pat. No. 5,460,128, which in turn is a continuation of U.S. application Ser. No. 07/919,916, filed Jul. 27, 1992, now U.S. Pat. No. 5,265,562.

This application is also is a continuation of and claims the benefit of U.S. Provisional Application No. 60/001,617, filed Jul. 28, 1995.

FIELD OF THE INVENTION

The present invention relates generally to internal combustion engines and more particularly to expandable chamber piston engines operating in an open thermodynamic cycle.

BACKGROUND OF THE INVENTION

Automotive vehicle and engine manufacturers, fuel injection equipment suppliers and, indeed, society as a whole, share in the desire for efficient, effective transportation. The balance between combustion processes to produce power, and those processes which create pollution, is best addressed by enhancing the fundamental efficiency of the engine processes.

It is well known that the ideal Carnot Cycle, in which isothermal heat addition and rejection are combined with isentropic compression and expansion, is the most efficient engine cycle for any given upper and lower operating temperatures. However, the Carnot cycle is not practical for an expanding chamber piston engine due to the very high (over 50:1) compression ratio required to produce significant power. Nevertheless, a practical process which could make some use of the highly efficient Carnot process would be an advance in the art.

The most practical engine, and thus presently the most predominant, is the Otto cycle engine which includes a compression process of a fuel-air mixture followed by unregulated combustion. It is well known that for a given compression ratio the ideal Otto cycle is the most efficient expanding chamber piston engine since the Otto cycle combines high peak temperature with a practical average temperature of heat input. However, the high peak combustion temperature of an Otto engine can cause auto-ignition of a portion of the fuel-air mixture, resulting in engine noise and damage to the engine, as well as the creation of excess amounts of undesired Nox.

In the pasta auto-ignition in Otto cycle engines was reduced by use of chemical additives to the fuel such as lead compounds (no longer permitted by law), manganese compounds (which cause spark plug deposits to build up, resulting in misfire) benzene (the use of which is presently being curtailed by legislative mandate) or fuel reformulations to prevent deleterious auto-ignition while meeting environmental goals. Auto-ignition can also be reduced by limiting the combustion temperature, either through use of a lower compression ratio (which reduces both power and efficiency) , or by exhaust gas recirculation, lean-burn or stratified charge techniques, all of which cause power loss.

For general purpose road use, the engines of emission-constrained passenger cars are presently limited to useful compression of about 10:1. Above that limit the increased cost of the fuel control system and the additional cost of more platinum or rhodium for exhaust catalytic converters generally outweighs the benefit of higher compression ratios. A technology which would allow a practical Otto compression process to operate at compression ratios higher than 10:1 would be an advance in the art.

An improvement on the Otto cycle, as represented by a higher useful compression ratio, is an ideal Diesel cycle comprising isothermal heat addition and isochoric (constant volume) heat rejection combined with isentropic compression and expansion. This ideal Diesel cycle overcomes the fuel octane limit of the Otto cycle by utilizing air alone for the compression process and mixing the fuel with the process air as part of the combustion process. This allows use of a low octane-rated fuel, but requires cetane-rated fuel (enhanced auto-ignition). However, the isothermal process of the aforedescribed ideal Diesel cycle was found to be impractical, due to the extremely high compression ratio (50:1) required, and an alternate heat addition process (isobaric or constant pressure) was put into practice.

Another variation on the ideal Diesel cycle is the ideal limited pressure cycle including combined isochoric and isobaric heat addition, and isochoric heat rejection combined with isentropic compression and expansion. This combustion process allows an engine to be operated at moderate compression ratios (14:1 to 17:1 for large open chamber engines) as well as high compression ratios (20:1 to 25:1 for small displacement engines).

While Diesel-type engines are fuel efficient, due to their high compression ratio, they tend to be heavier and lower in power than an Otto engine of the same displacement. In addition, all direct injection engines of the Diesel type suffer from an ignition lag which reduces the control and effectiveness of the combustion process. One way to overcome this ignition lag is to preheat the fuel to 1,500° R. before injection This produces hypergolic combustion upon injection, but is an impractical method due to the short service life of the injector nozzle.

Hybrid engine processes have been developed incorporating characteristics of both diesel and spark ignition engines but these have proven impractical for road use. Examples of these hybrid processes include the Texaco TCCS, the Ford PROCO, Ricardo, MAN-FM and the KHD-AD. All employ open chamber, direct injection spark ignition engines using stratified charge techniques to improve efficiency. These developmental engines suffer substantial power loss because of ignition lag, incomplete utilization of the process air and poor mixing of the fuel/air charge.

Because the limits of current technology are thus being reached, there exists a need for an internal combustion engine that will provide a better balance between power production, fuel efficiency, pollution creation and pollution control by use of a more practical combination of thermodynamic processes.

SUMMARY OF THE INVENTION

Basically, the present invention meets the foregoing requirements and constraints by utilizing a new combination of thermodynamic processes which limits maximum combustion temperature, thereby enabling an internal combustion engine to operate at a higher compression ratio, a higher power output or a lower peak temperature with a given fuel.

Broadly, in accordance with one exemplary embodiment, the invention is practiced by controlling the fuel quantity and injection timing of a direct injection system in an

internal combustion engine, so as to produce a combustion process consisting of a constant volume (isochoric) phase and a constant temperature (isothermal) phase. The limited temperature engine cycle so achieved allows the use of substantially higher compression ratios with a given fuel or with a given NOx emission limit, thereby providing a higher practical thermal efficiency than the standard lower compression ratio Otto cycle when measured by fuel/air analysis or by analyzing the test data of an actual engine.

In addition, the limited temperature cycle so achieved allows a higher power output and a lower NOx creation rate at a given compression ratio with a low quality fuel.

In accordance with another aspect of the invention, there is provided a new method of operating an expanding chamber internal combustion piston engine for providing limited temperature combustion. Such an engine includes at least one cylinder and an associated piston for forming a combustion chamber with the piston having a top dead center position; an operating cycle including an intake stroke, a compression stroke and an expansion strokes and a fuel introduction system. The method of operating the engine pursuant to the invention comprises the steps of first forming a predetermined fuel/air mixture by introducing a predetermined fraction in one or more discrete quantities of the total fuel necessary for complete combustion of the process air. Next, the relatively lean fuel/air mixture so introduced is ignited when the piston is substantially at top dead center, this first phase of combustion thereby comprising a substantially isochoric or constant volume process. The fuel supplied for the isochoric process is an amount which will produce a greatly reduced temperature of the working fluid, as low as 3,300 degrees Rankine, or less, even at high compression ratios. Last, there is introduced, substantially at the beginning of the expansion stroke, a second fraction (in one or more discrete quantities) of the total fuel necessary for complete combustion. The combustion resulting from the introduction of the second fraction is a substantially isothermal process. The isothermal process occurs at a temperature which is significantly less than that attained in a comparable Otto cycle engine having the same or a substantially lower compression ratio Nox emissions are thereby limited and such reduction is obtained at lower cost than existing systems.

Those skilled in the art will recognize that the method of the present invention makes use of the Otto process for the first phase of the heat input or combustion process and the Carnot process for the second phase of heat input or combustion process. Comparison of the operating cycle of the invention with the standard Otto cycle using ideal fuel/air analysis shows an unexpected benefit from the invention: the overall operating efficiency of an engine (with a given compression ratio) will be greater using the limited temperature cycle of the present invention than when using the Otto cycle, when high temperature losses are considered. This increase in efficiency at a given compression ratio is a benefit derived from reduced cycle temperature.

Another advantage of the present invention is that it allows an engine to be operated more efficiently (at a higher compression ratio) than is possible with present engines. The most readily available motor vehicle gasoline fuels have combustion quality ratings of about 90 octane, which generally limits many engines to a compression ratio of about 10:1 for public road use. Since octane rating is indirectly related to high combustion temperature (high operating temperatures require high octane fuel), and the invention reduces the operating temperature, it follows that the invention enables the use of a higher engine compression ratio with a commensurate gain in engine efficiency.

In sum, the method of the present invention allows a practical engine to make use of an ideal process: during the isothermal combustion process, heat energy is converted directly to work. The invention utilizes present engine design and materials and may be practiced by modifying existing internal combustion engines to incorporate the desired compression ratio and appropriate fuel introduction systems.

BRIEF DESCRIPTION OF THE DRAWINGS

Further objects, advantages and features of the invention will become evident from the detailed description of the preferred embodiment when read in conjunction with the accompanying drawings in which:

FIG. **1** is a schematic representation of a portion of a four-cycle internal combustion engine utilizing the principles of the present invention;

FIG. **2** is a side elevation view, in cross section, of a solenoid-operated fuel injector which may be used in the engine depicted in FIG. **1**, the injector including a plunger cam providing fuel injection volumes and rates in accordance with the present invention;

FIG. **3** includes plots of (1) fuel injector plunger lift versus engine crank angle and (2) injected fuel volumes versus engine crank angle in accordance with one exemplary operating condition of an engine in accordance with the present invention;

FIG. **4** shows pressure-volume and related engine cycle diagrams further explaining the cycle of the present invention;

FIGS. **5**A–**5**C together depict a flow chart showing steps for analyzing the engine cycle of the present invention and for calculating engine performance and other operating parameters;

FIG. **6** includes plots of percent fuel supplied for constant temperature combustion vs. compression ratio for two maximum temperatures 3,300° R. and 4,000° R.;

FIGS. **7** is a plot of heat release rate vs. crank shaft angle for a process according to the invention having a maximum temperature of 3,300° R.; and

FIG. **8** shows pressure-volume and related engine cycle diagrams relating to another embodiment of the invention.

DETAILED DESCRIPTION OF THE PREFERRED EMBODIMENTS

With reference to FIG. **1** there is shown in schematic form a normally aspirated, four-cycle spark ignition engine **10** employing the teachings of the present invention. It will become evident to those skilled in the art that the advantages of the invention may be realized with two-cycle spark ignition engines, as well as Wankel rotary-type engines and those that are turbo- or supercharged. Further, although a single cylinder is shown in FIG. **1** for simplicity, it will be understood that an engine incorporating the invention will typically have multiple cylinders.

The engine **10** comprises a block **12** a cylinder head, **14** and a cylinder **16** having a piston **18** adapted to reciprocate between top and bottom dead centers within the cylinder **16** to define with the cylinder **16** a combustion chamber **20**. The reciprocating motion of the piston **18** is converted to rotational output motion by means of a connecting rod **22** and a crankshaft assembly **24**, all as well known in the art. As will be explained in greater detail below, in accordance with the invention the compression ratio of the engine **10** will typically be substantially higher than that of a conventional

automotive spark ignition internal combustion engine. For example, while a conventional engine may have a compression ratio of 8:1 to 10:1, an engine employing the teachings of the present invention may have a compression ratio of 18:1.

The engine **10** further includes an air induction system **26** including an air intake valve **28** in the cylinder head **14**. The valve **28**, along with an exhaust valve (not visible in FIG. **1**), is actuated by a conventional cam shaft **30** and related valve train mechanism **32**. Also mounted in the cylinder head **14** is a spark plug **34** whose energization is controlled and timed by means well known in the art.

Referring now also to FIG. **2**, fuel is supplied to the engine **10** by a fuel injection system **36** which precisely regulates the fuel/air mixture for combustion and exhaust emission control. The fuel injection system **36** includes an electrically actuated fuel injection pump **38** installed in or adjacent to the cylinder head **14** and adapted to inject predetermined quantities of fuel directly into the combustion chamber **20** via an injection line **40** and an injector nozzle **41** terminating inside the combustion chamber **20** and adjacent to the spark plug **34**. The injector pump **38** may, for example, take the form of a Model 200 fuel injection unit manufactured by AMBAC International, with a modified cam as described below and the addition of a solenoid **44**. The injector pump **38** has a fuel spill valve **42** operated against the bias of a spring **43** by the solenoid **44** energizable by a solenoid drive unit (SDU) **46**. The drive unit **46** is in turn controlled by an electronic control unit (ECU) **48** which monitors, by means of appropriate sensors, selected engine operating conditions such as intake and exhaust manifold pressures, engine speed, ignition firing position, throttle position, engine temperature, and so forth. Electrical signals representing these conditions are applied as inputs **50** to the control unit **48**. As is known in the art, the electronic control unit **48**, based on the multiple inputs **50**, electronically calculates the timing and metering of the fuel introduced into the combustion chamber **20** by the injection pump **38**.

Fuel is supplied to the fuel injector unit **38** by a feed pump (not shown) through a fuel line **52** at a sufficiently high pressure to produce proper fuel flow and to prevent vapor formation in the fuel system during extended high-temperature operation. When the solenoid **44** is energized by the solenoid drive unit **46**, the valve **42** closes and, because the displacement of the plunger **54** is known, the fuel quantity injected is controlled solely by varying the injector pulse width, that is, the duration the valve **42** is held closed.

The injector pump **38** includes a piston type pumping plunger **54** actuated by a cam **56** having a cam follower surface or cam lobe **58** in engagement with the plunger **54**; the cam **56** is rotatable at engine crank shaft speed.

As shown in FIG. **3**, the cam **56** has a lift profile, as a function of crank angle, having a first linear portion **60** rising from a base circle **62** to a maximum lift of about ½ inch through an angular crank displacement of about 180°, and a second linear portion **64** dropping back to the base circle in about 60° of crank displacement.

FIG. **3** shows a fuel injection schedule for a single, exemplary operating condition, namely, wide open throttle for a Limited Temperature Cycle, four-cycle engine-having a compression ratio of 18:1 and a peak temperature of about 3,300° R. The fuel injection schedule of FIG. **3** provides for two successive injections of fuel volumes A and B. As already explained, the fuel volumes A and B are functions only of the durations that the injector **38** is active, as determined by the electronic control unit **48**.

Usually, a fuel injection pump is driven at camshaft speed, that is, at one half engine crankshaft speed. Here, the pump is rotated at engine crankshaft speed with the embodiment shown in FIG. **2** having its cam lobe **58** starting its lift essentially at the beginning of the engine intake stroke (0°). This provides a first fuel injection volume (shown as A in FIG. **3**) during the intake stroke, similar to an Otto engine. The pump cam **56** completes its first rotation at the end of the engine compression stroke (360°). The next rotation of the pump cam **56** will inject the second fuel volume (volume B) during the power stroke in a manner which produces essentially constant temperature combustion.

Fuel volume A, comprising about 56% of the total fuel required for complete combustion of the process air, is injected during the intake stroke of the piston **18** between about 10° and 120° (engine crank angle) after top dead center. Substantially at the end of the compression stroke (360° or top dead center), the second volume, B, comprising the remaining 44% of the total amount of fuel required for complete combustion, is injected, such second injection terminating at about 60° after TDC, i.e., at about 420°. Ignition by the spark plug **34** in the example under consideration will typically be provided at 5° to 10° before top dead center.

The combustion of the fuel/air mixture based on injected volume A comprises a first combustion phase which, as in the standard Otto Cycle, is a substantially constant volume process. The first combustion phase will, of course, comprise a very lean mixture which, in the absence of the second phase of combustion to be described, would tend to markedly reduce engine power. The combustion of fuel volume B takes place at substantially constant temperature, that is, isothermally, providing both power and efficiency. It has been determined that the temperature at which this second combustion phase takes place is limited and less than that which would be attained in a standard Otto cycle engine of even modest compression ratio, for example, 8:1 or 10:1. Thus, the limited temperature cycle of the present invention permits the designer to dramatically increase the compression ratio of an engine for a given fuel, for example, to as high as about 18:1, providing all of the advantages, including high efficiency and power output, derived from a high compression ratio engine without the thermal, detonation and emission penalties.

A majority of the fuel is pre-mixed, generally 50% to 90%, for constant volume combustion. This first process is combined with a second fuel portion supplied during the combustion process at a rate to, first, limit maximum pressure, and second, limit maximum cylinder temperature.

The engine cycle of the present invention has a higher thermal efficiency than a Carnot cycle with the same average temperature of heat input.

FIG. **4** shows three engine cycle diagrams (pressure-volume, temperature-volume, and temperature-entropy) comparing examples of the limited temperature cycle of the present invention for two maximum combustion chamber temperatures (T_{max}), namely, 3,300° R. and 4,300° R. The engine cycle of the first example (T_{max}=3,300° R.) is defined by the points **1-2-3-4-5-1** in the diagrams of FIG. **4** and that of the second example (T_{max}=4,300° R.) by the points **1-2-3'-4'-5'-1**. In FIG. **4**, path **1-2** is an 18:1 isentropic compression and paths **2-3** and **2-3'** are constant volume combustion processes using, in the first example, 56% of the fuel necessary for complete combustion of the process air. Paths **3-4** and **3'-4'** are isothermal processes using, in the first example, the remaining 44% of the fuel. Paths **4-5** and **4'-5'**

are isentropic expansion processes and paths **5-1** and **5'-1** are constant volume exhaust processes.

Using the ideal fuel/air analysis of FIGS. **5**A–**5**C, the conditions or states at each point for the two examples of FIG. **4** may be calculated as follows:

FIRST EXAMPLE

CR=18.0 T_{max}=3300° R.

Point 1—Initial Conditions at BDC, Intake Stroke:

P1=14.7 psia
V1=50.3 in^3
T1=530° R.
N=2000 RPM
N_s=0.95
F/A=0.0416
M_a=130 lb/hr
LHV=18,300 Btu/lb
N_v=100%
NCOMB=100%

where:

P1=initial pressure
V1=initial volume
T1=initial temperature
N=engine speed
Ns=compression/expansion efficiency
F/A=fuel/air ratio
Ma=air mass flow
LHV=fuel lower heating value
Nv=volumetric efficiency
NCOMB=combustion efficiency

Point 2—Following Isentropic Compression (Path **1-2**):

$$K_a = 1.37$$

$$C_{v(air)} = .186 \text{ Btu/lbm–° R}$$

$$V2 = V1/CR = \frac{50.3}{18} = 2.79 \text{ in}^3$$

$$T2 = T1\left[\frac{\left(\frac{V1}{V2}\right)^{K-1} - 1}{N_S} + 1\right] = 530\left[\frac{(18^{.37}) - 1}{95} + 1\right] = 1597° \text{ R}$$

$$P2 = P1\left(\frac{V1}{V2}\right)^{K} = 14.7(18)^{1.37} = 771 \text{ psia}$$

$$WC = C_V(T1 - T2) = .186(530 - 1597) = -198 \text{ Btu/lbm}$$

Point 3—Following Limited Temp. Comb. @ Constant Volume (Path **2-3**):

$$T_3 = T\max = 3300° \text{ R}$$

-continued

$$P3 = P2(T3/T2) = (771)\left(\frac{3300}{1597}\right) = 1593 \text{ psia}$$

$$C_V(ex) = .242 \text{ Btu/lbm° R}$$

$$V3 = V2 = 2.79 \text{ in}^3$$

$$Q_{cv} = C_v(T3 - T2) = .242(3300 - 1597) = 412 \text{ Btu/lbm}$$

$$M_f = F/A(Ma) = (.0416)(130) = 5.408 \text{ lb/hr}$$

$$Q_{tot} = (M_f)(LHV) = (5.408)(18{,}300) = 98{,}966 \text{ Btu/hr}$$

$$Q_{\frac{cycle}{ex}} = \frac{(N_c)(QTOT)}{(1 + OFAR)(TMA)} = \frac{(1.0)(98{,}966)}{(1.0416)(130)} = 731 \text{ Btu/lbm}$$

$$Q_v/Q_{cycle} = 412/731 = 56.4\% \leftarrow \% \text{ of comb at c.v.}$$

Point 4—Following Constant Temperature Combustion and Expansion (Path **3-4**):

$$Q_{ct} = Q_{CYCLE} - Q_{cv} = 731 - 412 = 319 \text{ Btu/lbm} \leftarrow (43.6\% \text{ at C.T.})$$

$$T4 = T3 = 3300° \text{ R}$$

$$V4 = (V3)e^{(Qct\frac{J}{RT4})} = (2.79)e^{\frac{(319)(778)}{(53.4)(3300)}} = 11.41 \text{ in}^3$$

$$P4 = P3\left(\frac{V3}{V4}\right) = 1593\left(\frac{2.79}{11.41}\right) = 389 \text{ psia}$$

$$W_{CTE} = \frac{(R)(T4)}{J}\left(\ln\frac{P3}{P4}\right)N_T = \frac{(53.4)(3300)}{778}\ln\left(\frac{1593}{389}\right)(.95)$$
$$= 303 \text{ Btu/lbm}$$

Point 5—Following Isentropic Expansion (Path **4-5**):

$$K_{ex} = 1.26$$

$$C_{pex} = .325$$

$$C_{vex} = .25$$

$$V_5 = V_1 = 50.3 \text{ in}^3$$

$$T5 = T4\left[1 - N_s\left(1 - \left(\frac{V4}{V5}\right)^{K-1}\right)\right] = 3300\left[1 - .95\left(1 - \frac{11.41^{1.26-1}}{50.3}\right)\right] = 2297° \text{ R}$$

-continued

$$P5 = P4\left(\frac{V4}{V5}\right)^{Kex} = 389\left(\frac{11.41}{50.3}\right)^{1.26} = 60 \text{ psia}$$

$$W_{EX} = C_V(T4 - T5) = .25(3300 - 2297) = 251 \text{ Btu/lbm}$$

Performance Summary of Cycle of First Example:

$$W_{net} = WC + WEXT + WEX = -198 + 303 + 251 = 356 \text{ Btu/lbm}$$

$$IHP = \frac{(1 + F/A)(Ma)(W_{net})}{2545} = \frac{(1.0416)(130)(356)}{2545} = 18.94 \text{ HP}$$

$$IMEP = \frac{(792{,}000)(IHP)}{(N)(V1 - V2)} = \frac{(792000)(18.94)}{(2000)(50.3 - 2.79)} = 158 \text{ psia}$$

$$N_{cyc} = \frac{W_{net}}{Q_{tot}} = \frac{356}{731} = 48.7\%$$

SECOND EXAMPLE

Point 1—Initial Conditions at BDC, Intake Stroke:

Same as first example.

Point 2—Following Isentropic Compression (Path **1-2**):

Same as first example.

Point 3'—Following Limited Temp. Comb. @ Constant Volume (Path **2-3'**):

$$T_{3'} = T\max = 4300° \text{ R}$$

$$P3' = P2(T3'/T2) = (771)\left(\frac{4300}{1597}\right) = 2076 \text{ psia}$$

$$C_V(exh) = .242 \text{ Btu/lbm}° \text{R}$$

$$V3' = V2 = 2.79 \text{ in}^3$$

$$Q_{c_v} = C_v(T3' - T2) = .242(4300 - 1597) = 654 \text{ Btu/lbm}$$

$$M_f = F/A(Ma) = (.0416)(130) = 5.408 \text{ lb/hr}$$

$$Q_{tot} = (M_f)(LHV) = (5.408)(18{,}300) = 98{,}966 \text{ Btu/hr}$$

$$Q_{\frac{cycle}{ex}} = \frac{(N_c)(QTOT)}{(1 + OFAR)(TMA)} = \frac{(1.0)(98{,}966)}{(1.0416)(130)} = 731 \text{ Btu/lbm}$$

$$Q_{cv}/Q_{cycle} = 654/731 = 89.5\% \leftarrow \% \text{ of comb at c.v.}$$

Point 4'—Following Constant Temperature Combustion and Expansion (Path **3'-4'**):

$$Q_{ct} = Q_{CYCLE} - Q_{cv} = 731 - 654 = 77 \text{ Btu/lbm} \leftarrow (10.5\% \text{ at C.T.})$$

$$T4' = T3' = 4300° \text{ R}$$

$$W4' = (V3')e^{(Q_{CT}\frac{J}{RT4'})} = (2.79)e^{\frac{(77)(778)}{(53.4)(4300)}} = 3.62 \text{ in}^3$$

$$P4' = P3'\left(\frac{V3'}{V4'}\right) = 2076\left(\frac{2.79}{3.62}\right) = 1600 \text{ psia}$$

$$W_{CTE} = \frac{(R)(T4')}{J}\left(\ln\frac{P3'}{P4'}\right)N_T = \frac{(53.4)(4300)}{778}\ln\left(\frac{2076}{1600}\right)(.95)$$

$$= 72.9 \text{ Btu/lbm}$$

Point 5'—Following Isentropic Expansion (Path **4'-5'**):

$$K_{ex} = 1.26$$

$$C_{pex} = .325$$

$$C_{vex} = .25$$

$$V_{5'} = V_1 = 50.3 \text{ in}^3$$

$$T5' = T4'\left[1 - N_S\left(1 - \left(\frac{V4'}{V5'}\right)^{K-1}\right)\right] = 4300\left[1 - .95\left(1 - \frac{3.62^{1.26-1}}{50.3}\right)\right]$$

$$= 2.275° \text{ R}$$

$$P5' = P4'\left(\frac{V4'}{V5'}\right)^{Kex} = 1600\left(\frac{3.62}{50.3}\right)^{1.26} = 58 \text{ psia}$$

$$W_{EX} = C_V(T4' - T5') = .25(4300 - 2275) = 506 \text{ Btu/lbm}$$

Performance Summary of Cycle of Second Example:

$$W_{net} = WC + WEXT + WEX = -198 + 72.9 + 506 = 381 \text{ Btu/lbm}$$

$$IHP = \frac{(1 + F/A)(Ma)(W_{net})}{2545} = \frac{(1.0416)(130)(3.81)}{2545} = 20.27 \text{ HP}$$

$$IMEP = \frac{(792{,}000)(IHP)}{(N)(V1 - V2)} = \frac{(792000)(20.27)}{(2000)(50.3 - 2.79)} = 169 \text{ psia}$$

$$N_{cyc} = \frac{W_{net}}{Q_{tot}} = \frac{381}{731} = 52\%$$

In another embodiment of the invention, the fuel supplied for the isochoric event may be an amount which will produce a temperature of the working fluid of around 4,000 degrees Rankine, somewhat less than that produced by unconstrained combustion, with the remainder of the fuel supplied proportional to the increase in volume during the

power stroke, to produce essentially isothermal combustion. This embodiment will produce high power, while avoiding detonation at higher compression ratios.

FIG. **6** shows plots for two maximum combustion temperatures (3,300° R. and 4,000° R.), of percent fuel supplied for constant temperature combustion as a function of compression ratios ranging from 8:1 to 24:1.

FIG. **7** is a plot of heat release rate as a function of engine crankshaft angle for a maximum combustion temperature of 3,300° R. (First Example, above). A first portion **70** of this plot shows the heat release rate for the constant volume process (path **2-3** in FIG. **4**). A second portion **72** of the plot shows the heat release rate for the isothermal process (path **3-4** in FIG. **4**).

With reference again to FIG. **3**, it will be evident to those skilled in the art that the invention may be applied to two cycle engines simply by scheduling the first injection (volume A) to take place at the beginning of the compression stroke and the second injection (volume B) to take place as in the four cycle engine. In the two cycle application, the active portion of the cam lobe must extend from the beginning of the compression stroke to the end of the isothermal combustion process. Since this is an extended duration with a significant non-utilized portion of the lift ramp, a constant radius portion on the cam can be used to avoid excessively high total cam lobe dimensions.

Instead of a fuel injection pump (as shown in FIG. **2**) those skilled in the art will understand that a solenoid-controlled unit injector can be used or, as a further alternative, a common rail fuel injection system, fed by a constant-flow, high-pressure pump, can be utilized with the injectors independently controlled by solenoids. Still further, it will be obvious to those skilled in the art that piezoelectric actuators may be substituted for the solenoids where very short injector energization times (that is, small fuel quantities) are required. Piezoelectric actuators may also be utilized to provide a higher degree of control over injection since such injectors may be used to inject multiple discrete quantities with the result that the process will more closely follow the ideal isothermal process paths. In accordance with yet another alternative, a piezoelectric device may be substituted for the pump plunger in a unit injector, thus eliminating the requirement for a cam to actuate the injector. To make such an application of a piezoelectric actuator practical, the piezoelectric device would be actuated multiple times (for example, 100 times) by the electronic control unit in order to inject the required total fuel quantities with a practical size piezoelectric element.

It will also be appreciated that the process diagrams of FIG. **4** show ideal processes. Real engine paths will depart to some extent from the ideal cycles shown due to timing, heat and friction losses. These factors will manifest themselves in the cycle diagram as, for example, rounded corners and displacements of the process lines.

To practice the present invention, it is also possible to combine a standard carburetor fuel introduction system with an injectors With reference to the example of FIG. **3**, with such a system, the carburetor would supply the first quantity (volume A) and the injector would supply the second quantity (volume B). The use of an injector for introducing both fuel charges is preferred, however, to minimize cost.

The invention can also be put into practice in combination with existing Otto, Diesel, lean-burn or stratified charge engine processes in the same engine at different loads or different operating conditions.

In some applications there will be a value to limiting maximum cylinder pressure. In that instance, the invention can make use of a further embodiment: a combination of constant volume combustion, constant pressure combustion, and constant temperature combustion. In this embodiment of the invention, heat is released during the constant volume process in such an amount as to reach the preferred pressure limit. Heat is then added at constant pressure until the preferred maximum temperature is reached. The remaining heat is added isothermally. An example of such an embodiment is shown in the process diagrams of FIG. **8**. An engine operated in accordance with this embodiment will include, with reference to FIG. **8**, the following process paths: path **1-2** is an isothermal compression process during which fuel is supplied. The fuel supplied early in the compression process serves two purposes first, the heat of vaporization reduces the work of compression, second the combustion temperature is reduced proportional to the cooling provided by the fuel, and third, the early injection allows time for preflame reactions to take peace prior to the ignition time, thus reducing ignition lag (a significant problem for Diesel or other predominantly direct injection hybrid systems). Path **2-3** is an isentropic compression process, as already explained; path **3-4** is an isochoric combustion process with maximum pressure limited to a preselected value by proportioning fuel quantity A (FIGS. **3**); path **4-5** is a constant pressure, i.e., isobaric, process provided by a first portion of fuel fraction B (FIGS. **3**), said portion being of an amount so as to continue isobaric combustion until the preselected maximum combustion temperature is reached; path **5-6** is an isothermal combustion process at the preselected maximum combustion temperature; path **6-7** is an isentropic expansion process; and path **7-1** is an isochoric exhaust process. Each of the fuel introductions can comprise one or more discrete quantities so as to follow the ideal processes as closely as practicable.

With reference once again to FIG. **3**, an additional embodiment of the invention can be put into practice by subdividing the first fraction (volume A) of the total fuel quantity into one or more discrete injected fuel portions. For example, if two such portions were used, these would be designated portions A' and A", the sum of these two portions equalling the volume A. In accordance with one example of this embodiment, the first fuel portion A', comprising 40% of the total fuel, would be injected during the interval from 10° to 80° of engine crank shaft rotation and the second fuel portion A", comprising 16% of the total fuel, would be injected during the interval from 320° to 350° of engine crank rotation. This embodiment provides a chemically correct fuel/air mixture surrounding the spark plug for the first phase of combustion serving to extend the lean misfire limit as well as further reducing the creation of No_x by avoiding the presence of unburned oxygen in the first combustion phase.

With reference once again to FIG. **1**, this arrangement can readily be used to produce a lean overall fuel/air mixture in the entire combustion chamber **20**, along with an ignitable fuel/air mixture in that portion of the combustion chamber adjacent to the spark plug **34**. This spatial stratification will be in combination with temporal stratification with injection timing for the fuel portion A" provided by solenoid **44** actuation just prior to the time that the spark plug provides an ignition spark. When this arrangement is combined with inlet pressure, designated as point **1** on FIG. **4**(A), elevated from a naturally aspirated value of about 14.7 pounds per square inch absolute to a new value as high as about 40 pounds per square inch absolute (i.e., compressed air through super-or turbo-charging), the power density of an engine with a compression ratio of 14:1 and a lean overall

fuel/air ratio of 40% of stoichiometric can equal or exceed the power density of an equivalent homogeneous charge naturally aspirated engine. In an arrangement such as this, inlet pressure at least as high as about 20 pounds per square inch absolute, typically, would be expected.

Along lines previously adverted to, an alternative arrangement to that of FIG. **1** can be put into practice by use of a high pressure pump to feed the fuel line **52**, eliminating the use of the individual plunger injection of pump **38** of FIG. **1**. Such an arrangement can be put into practice by use of a substitute injector pump, including a pumping plunger similar to the plunger **54** of FIG. **2**, but actuated by a piezoelectric device to engage the plunger rather than a cam such as the cam **56**. Then the piezoelectric actuator can be operated multiple times (for example in the range of 100 times), providing multiple injections for a given combustion activity or event. With such a piezoelectric device, a compression ratio, even higher than previously indicated herein, e.g., as high as about 24:1 is practical. A similar piezoelectric actuator could be substituted for the solenoid **44** of FIG. **1**. Piezoelectric materials developed by or in association with NASA Langeley Research Center, and known as the "Rainbow" and "Thunder" piezoelectric materials have design concerns related to those also of concern here.

By combining a higher compression ratio, as high as 24:1, with a lean burn and multiple infection, the limited temperature cycle can produce higher power combined with higher thermal efficiency while avoiding detonation (autoignition), at a compression ratio above the highest conventially useful value.

A number of the matters herein are also discussed in a paper, D. C. Kruse and R. A. Yano, SAE (Society of Automotive Engineers), Technical Paper No. 951963 (1995), which is incorporated herein by reference.

It will also be understood that the invention can be used with various fuels such as natural gas, diesel, gasoline and methanol, as well as with multiple fuels including, for example, a combination of natural gas for the constant volume heat release process and diesel fuel for the isothermal heat release process.

What is claimed is:

1. A method of operating a spark ignition internal combustion engine, said engine including a combustion chamber and having an operating cycle including a compressed air intake process, and a heat input phase comprising a substantially constant volume combustion process followed by a substantially isothermal combustion process.

2. A method of operating a spark ignition internal combustion engine as defined in claim **1**, wherein:

said processes include providing a substantially lean-burn fuel/air ratio in at least a portion of the combustion chamber and a stratified charge.

3. A method of operating a spark ignition internal combustion engine as defined in claim **1**, wherein:

said cycle includes a compression ratio of greater than or equal to 12.

4. A method of operating a spark ignition internal combustion engine, said engine including a combustion chamber and having an operating cycle including a compressed air intake process, and a heat input phase comprising a substantially constant volume combustion process followed by a substantially isothermal combustion process, said heat input phase of said cycle followed by a substantially isentropic power delivery process.

5. A method of operating a spark ignition internal combustion engine as defined in claim **4**, wherein:

said processes include providing a substantially lean-burn fuel/air ratio in at least a portion of the combustion chamber and a stratified charge.

6. A method of operating a spark ignition internal combustion engine, said engine including a combustion chamber and having an operating cycle including a compressed air intake process, and a heat input phase comprising a substantially constant volume combustion process, followed by a substantially constant pressure combustion process, followed by a substantially isothermal combustion process, said heat input phase of said cycle followed by a substantially isentropic power delivery process.

7. A method of operating a spark ignition internal combustion engine as defined in claim **6**, wherein:

said processes include providing a substantially lean-burn fuel air ratio in at least a portion of the combustion chamber and a stratified charge.

8. A method of operating a spark ignition internal combustion engine as defined in claim **6** wherein:

said cycle includes a compression ratio of greater than or equal to 12.

9. A method of operating an internal combustion expanding chamber piston engine for providing limited temperature combustion said engine having (1) at least one cylinder and an associated piston for forming a combustion chamber, said piston having a top dead center position, (2) an operating cycle including an intake stroke, a compression stroke and an expansion stroke, and (3) a fuel introduction systems said method comprising the steps of:

forming a predetermined fuel/air mixture by introducing compressed air and a predetermined fraction of the total fuel required for complete combustion of the process air in the combustion chamber;

igniting said fuel/air mixture when the piston is substantially at top dead center; and

introducing substantially at the beginning of the expansion stroke, a second fraction of the total fuel required for complete combustion;

wherein the combustion of the fuel/air mixture resulting from the fuel first introduced is a substantially constant volume process; and

wherein the combustion as a result of the introduction of the second fraction is a substantially isothermal process.

10. A method, as defined in claim **9**, wherein said processes include providing a substantially lean-burn fuel/air ratio in at least a portion of the combustion chamber and a stratified charge.

* * * * *

UNITED STATES PATENT AND TRADEMARK OFFICE

CERTIFICATE OF CORRECTION

PATENT NO. : 6,058,904
DATED : May 9, 2000
INVENTOR(S) : Douglas C. Kruse

It is certified that error appears in the above-identified patent and that said Letters Patent is hereby corrected as shown below:

Column 1, line 54, change "pasta", to read --past--.

Column 4, line 38, before "3,300⁰, insert --(--.

Column 4, line 38, after "4,000⁰ R", insert --)--.

Signed and Sealed this

Seventeenth Day of April, 2001

Attest:

NICHOLAS P. GODICI

Attesting Officer

Acting Director of the United States Patent and Trademark Office

Exhibit B

EXHIBIT C

US006405704B2

(12) **United States Patent**
Kruse

(10) **Patent No.: US 6,405,704 B2**
(45) **Date of Patent: *Jun. 18, 2002**

(54) **INTERNAL COMBUSTION ENGINE WITH LIMITED TEMPERATURE CYCLE**

(75) Inventor: **Douglas C. Kruse**, Burbank, CA (US)

(73) Assignee: **Kruse Technology Partnership**, Anaheim, CA (US)

(*) Notice: This patent issued on a continued prosecution application filed under 37 CFR 1.53(d), and is subject to the twenty year patent term provisions of 35 U.S.C. 154(a)(2).

Subject to any disclaimer, the term of this patent is extended or adjusted under 35 U.S.C. 154(b) by 0 days.

(21) Appl. No.: **09/567,870**

(22) Filed: **May 8, 2000**

Related U.S. Application Data

(63) Continuation of application No. 08/685,651, filed on Jul. 24, 1996, now Pat. No. 6,058,904, which is a continuation of application No. 08/466,817, filed on Jun. 6, 1995, now Pat. No. 5,566,650, which is a continuation of application No. 08/146,832, filed on Oct. 29, 1993, now Pat. No. 5,460,128, which is a continuation of application No. 07/919,916, filed on Jul. 29, 1992, now Pat. No. 5,265,562

(60) Provisional application No. 60/001,617, filed on Jul. 28, 1995.

(51) **Int. Cl.**[7] **F02B 1/14**; F02B 41/00

(52) **U.S. Cl.** **123/295**; 123/299

(58) **Field of Search** 123/295, 299; 60/602; 251/61.5

(56) **References Cited**

U.S. PATENT DOCUMENTS

2,917,031	A	12/1959	Nestorovic	
3,125,076	A	3/1964	Mullaney	
3,266,234	A	8/1966	Cook	
4,070,998	A	1/1978	Grow	
4,254,625	A	3/1981	Bergtedt et al.	
4,503,833	A	3/1985	Yunick	
4,704,999	A	11/1987	Hashikawa et al.	
4,798,184	A	1/1989	Palko	
4,836,161	A	6/1989	Abthoff et al.	
4,854,279	A	8/1989	Seno	
4,858,579	A	8/1989	Elsbett et al.	
4,862,859	A	9/1989	Yunick	
4,913,113	A	4/1990	Baranescu	
4,977,875	A	12/1990	Kumagai et al.	
5,101,785	A	4/1992	Ito	
5,265,562	A	11/1993	Kruse	
5,460,128	A	10/1995	Kruse	
5,566,650	A	10/1996	Kruse	
6,058,904	A *	5/2000	Kruse	123/295

FOREIGN PATENT DOCUMENTS

DE	2507142	9/1976
EP	0482055	7/1992

* cited by examiner

Primary Examiner—John Kwon
Assistant Examiner—Hieu T Vo
(74) *Attorney, Agent, or Firm*—Fulwider Patton Lee & Utecht, LLP

(57) **ABSTRACT**

An expandable chamber piston type internal combustion engine operating in an open thermodynamic cycle includes a combustion process having a constant volume (isochoric) phase followed by a constant temperature (isothermal) phase.

7 Claims, 9 Drawing Sheets

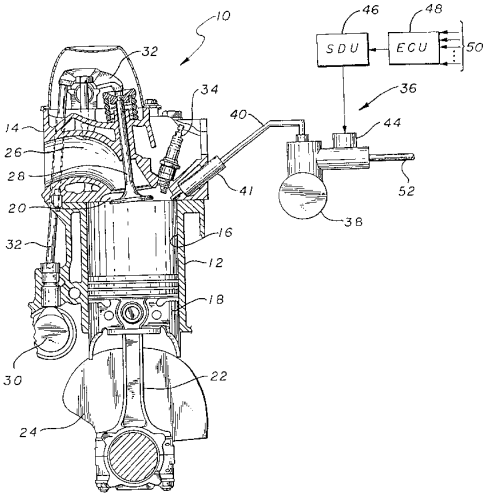

Exhibit C

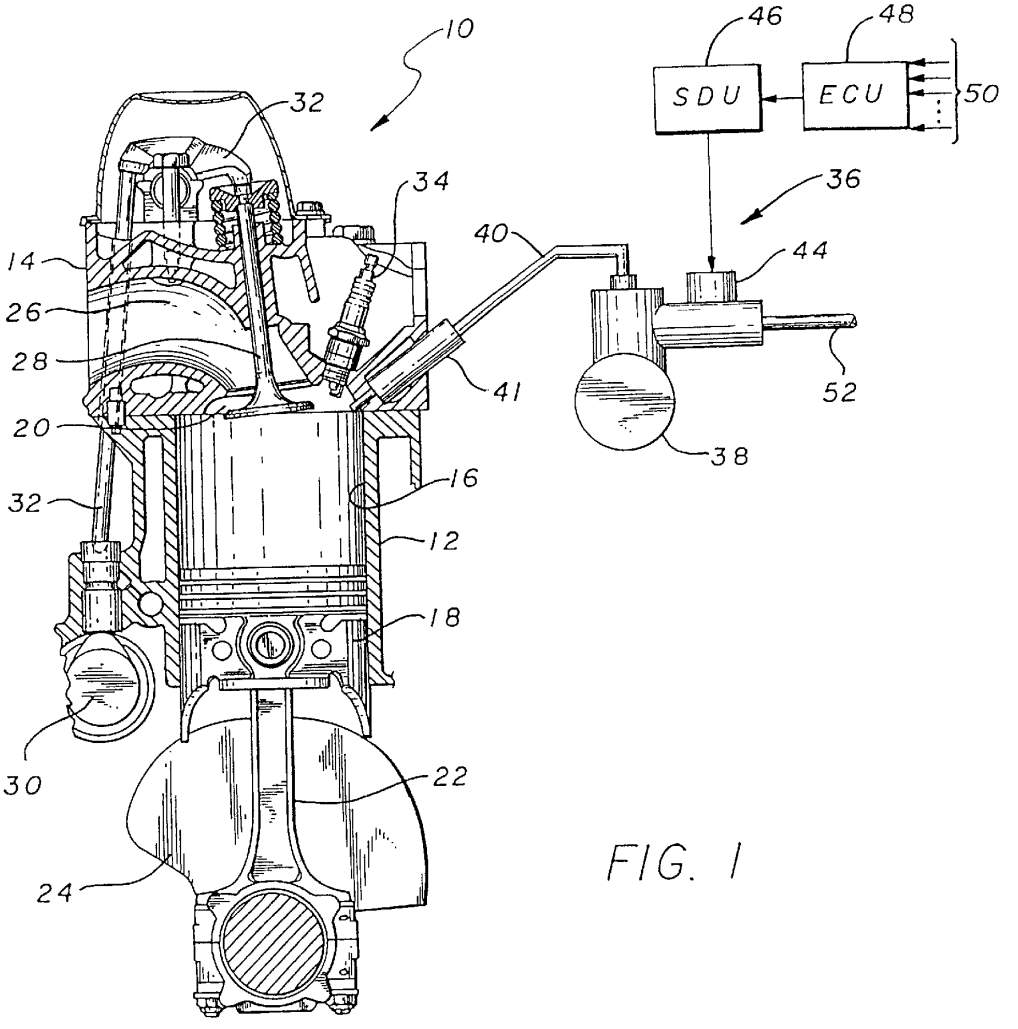
10
46
48
SDU
ECU
50
32
34
36
40
44
14
26
28
41
52
20
38
16
32
12
18
30
22
24

FIG. 1

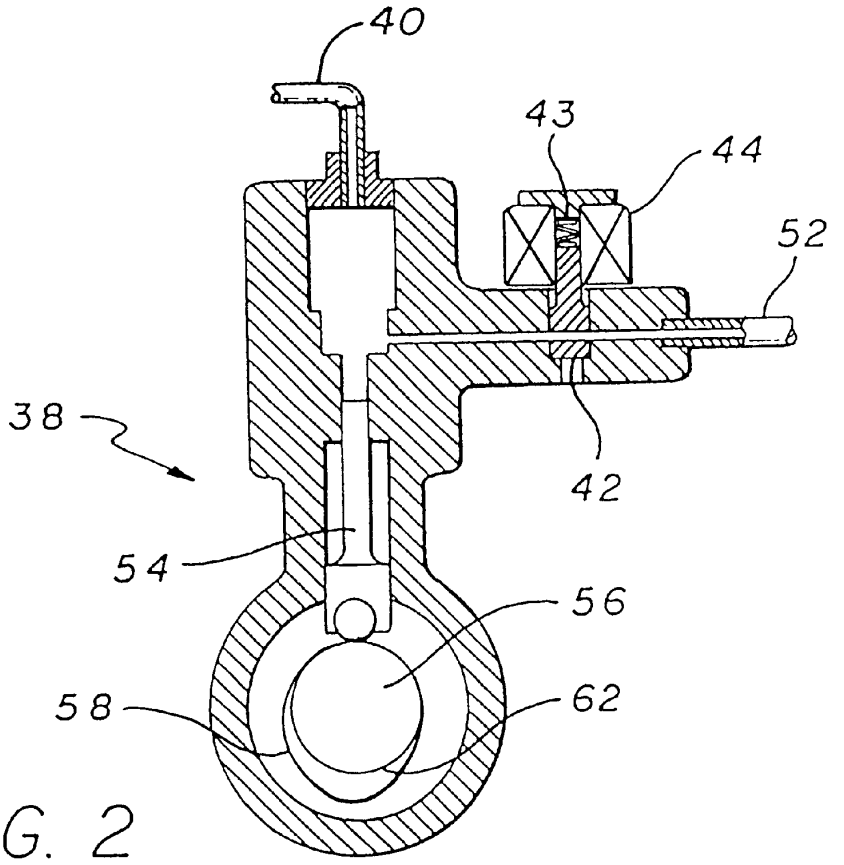

FIG. 2

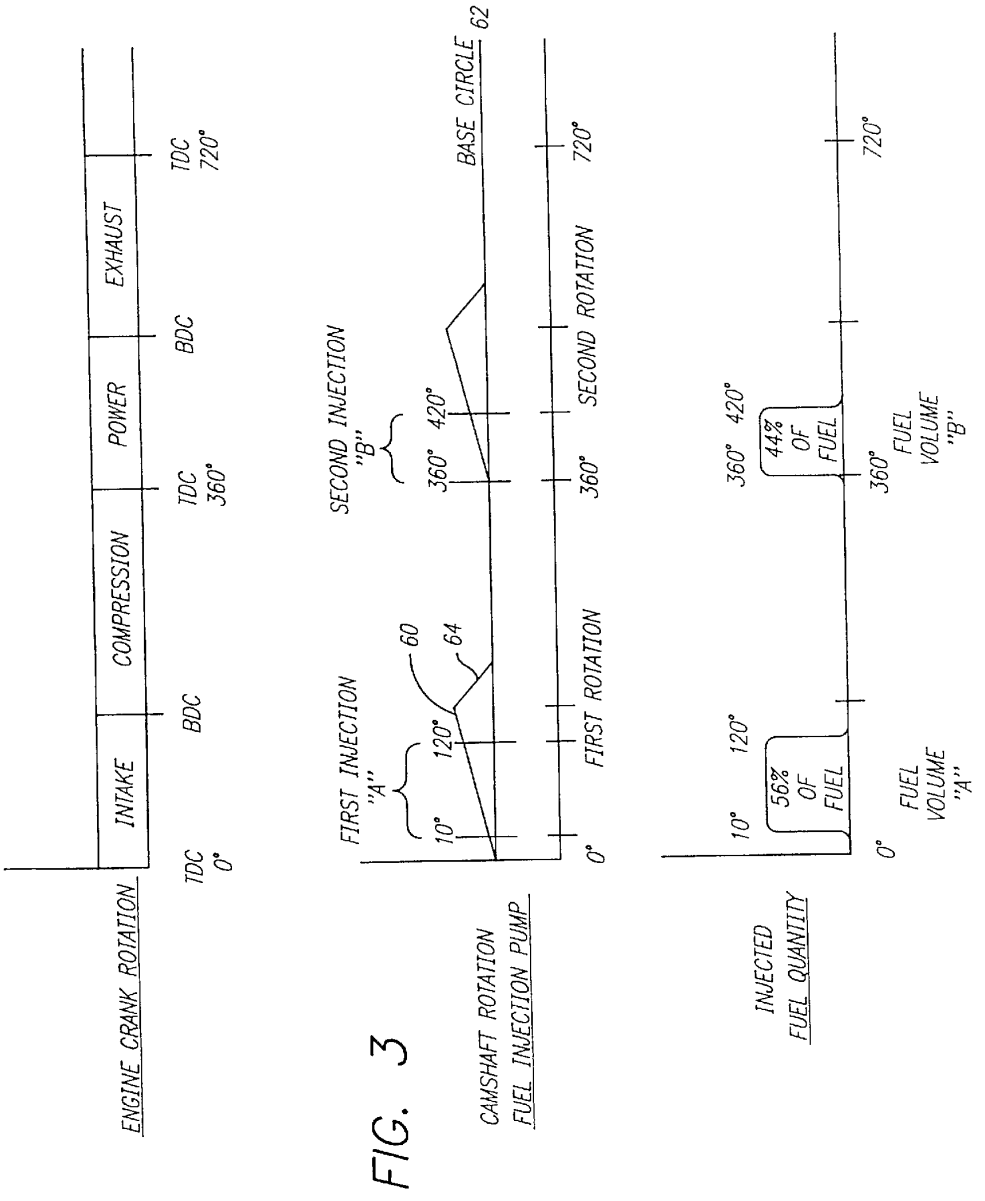
ENGINE CRANK ROTATION
INTAKE
COMPRESSION
POWER
EXHAUST
TDC
0°
BDC
TDC
360°
BDC
TDC
720°
CAMSHAFT ROTATION
FUEL INJECTION PUMP
FIRST INJECTION
"A"
SECOND INJECTION
"B"
10°
120°
60
64
360°
420°
BASE CIRCLE
62
FIRST ROTATION
SECOND ROTATION
INJECTED
FUEL QUANTITY
56%
OF
FUEL
44%
OF
FUEL
FUEL
VOLUME
"A"
FUEL
VOLUME
"B"

FIG. 3

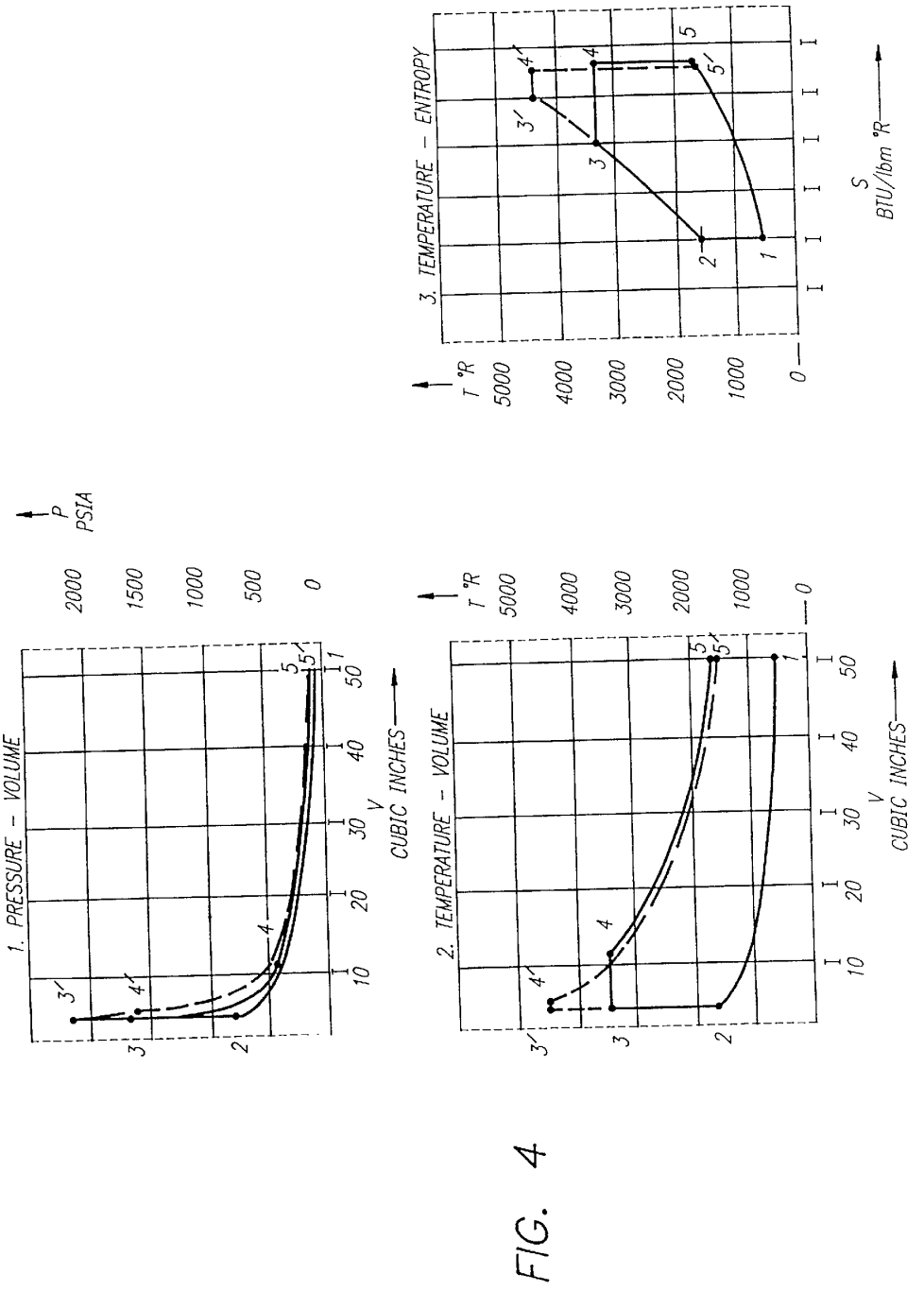
3. TEMPERATURE – ENTROPY
T °R
5000
4000
3000
2000
1000
0
S
BTU/lbm °R
1. PRESSURE – VOLUME
P
PSIA
2000
1500
1000
500
0
V
CUBIC INCHES
10
20
30
40
50
2. TEMPERATURE – VOLUME
1
2
3
3'
4
4'
5
5'

FIG. 4

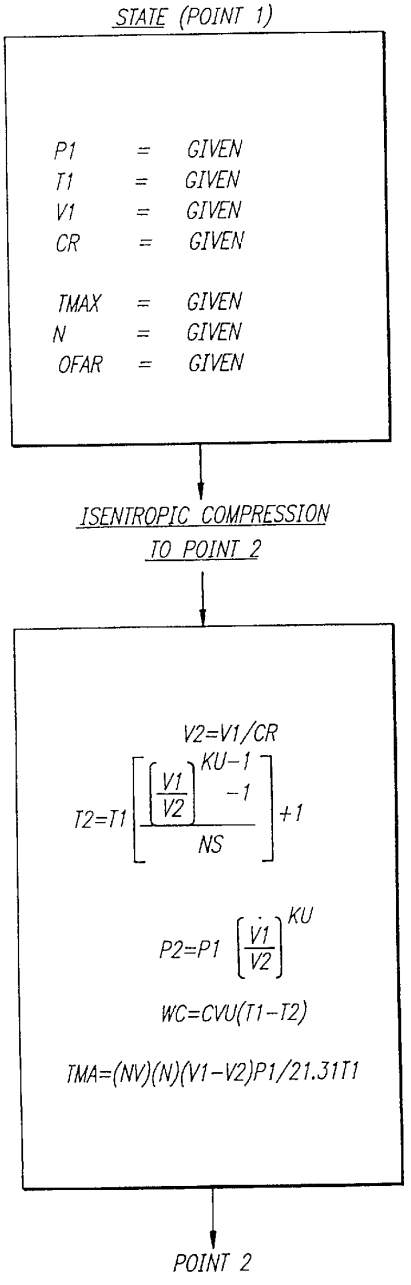

P1 = INITIAL CYL. PRESSURE AT BDC INTAKE STR, PSIA
T1 = INITIAL FLUID TEMP AT BDC INTAKE STR, °R
V1 = INITIAL CYL. VOLUME AT BDC INTAKE STR, IN^3
CR = CYCLE COMPRESSION RATIO
TMAX = MAXIMUM CYCLE TEMPERATURE, °R
N = ENGINE SPEED, RPM
OFAR = OVERALL FUEL-TO-AIR RATIO

P2 = CYL. PRESSURE AT TDC COMPR STR, PSIA
T2 = FLUID TEMP AT TDC COMPR STR, °R
V2 = CYL. VOLUME AT TDC COMPR STR, IN^3
KU = RATIO OF SPECIFIC HEATS, UNBURNED MIXTURE
NS = ISENTROPIC EFFICIENCY
NV = CYCLE VOLUMETRIC EFFICIENCY
WC = COMPRESSION WORK, BTU/lbm
CVU = SPECIFIC HEAT, CONSTANT VOLUME, UNBURNED MIXTURE, BTU/lbm °R
TMA = TOTAL MASS AIRFLOW, lb/hr

FIG. 5A

FIG. 5B

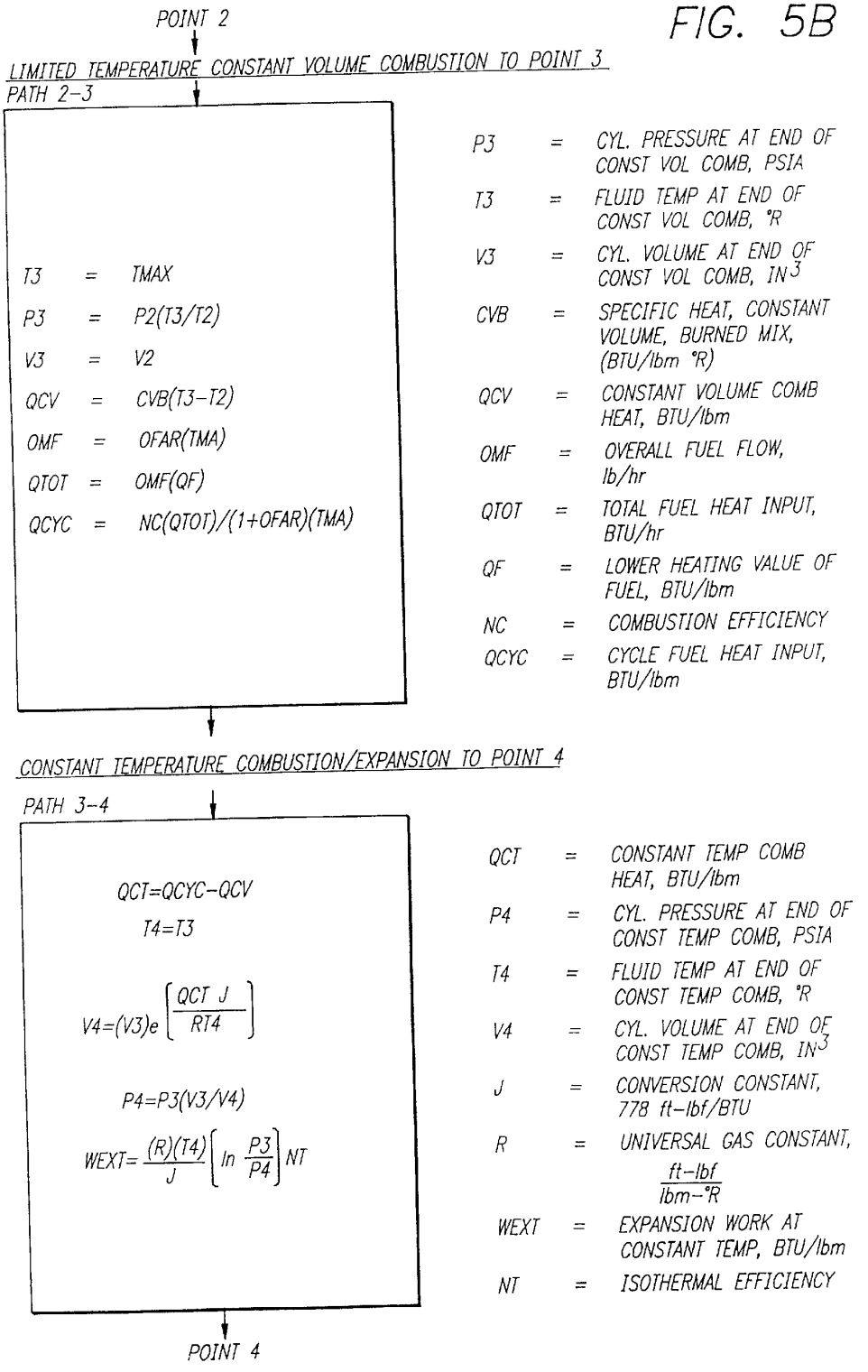
POINT 2
LIMITED TEMPERATURE CONSTANT VOLUME COMBUSTION TO POINT 3
PATH 2-3
T3 = TMAX
P3 = P2(T3/T2)
V3 = V2
QCV = CVB(T3-T2)
OMF = OFAR(TMA)
QTOT = OMF(QF)
QCYC = NC(QTOT)/(1+OFAR)(TMA)
P3 = CYL. PRESSURE AT END OF CONST VOL COMB, PSIA
T3 = FLUID TEMP AT END OF CONST VOL COMB, °R
V3 = CYL. VOLUME AT END OF CONST VOL COMB, IN3
CVB = SPECIFIC HEAT, CONSTANT VOLUME, BURNED MIX, (BTU/lbm °R)
QCV = CONSTANT VOLUME COMB HEAT, BTU/lbm
OMF = OVERALL FUEL FLOW, lb/hr
QTOT = TOTAL FUEL HEAT INPUT, BTU/hr
QF = LOWER HEATING VALUE OF FUEL, BTU/lbm
NC = COMBUSTION EFFICIENCY
QCYC = CYCLE FUEL HEAT INPUT, BTU/lbm
CONSTANT TEMPERATURE COMBUSTION/EXPANSION TO POINT 4
PATH 3-4
QCT=QCYC-QCV
T4=T3
V4=(V3)e[QCT J / RT4]
P4=P3(V3/V4)
WEXT=(R)(T4)/J [ln P3/P4] NT
QCT = CONSTANT TEMP COMB HEAT, BTU/lbm
P4 = CYL. PRESSURE AT END OF CONST TEMP COMB, PSIA
T4 = FLUID TEMP AT END OF CONST TEMP COMB, °R
V4 = CYL. VOLUME AT END OF CONST TEMP COMB, IN3
J = CONVERSION CONSTANT, 778 ft-lbf/BTU
R = UNIVERSAL GAS CONSTANT, ft-lbf/lbm-°R
WEXT = EXPANSION WORK AT CONSTANT TEMP, BTU/lbm
NT = ISOTHERMAL EFFICIENCY
POINT 4

FIG. 5C

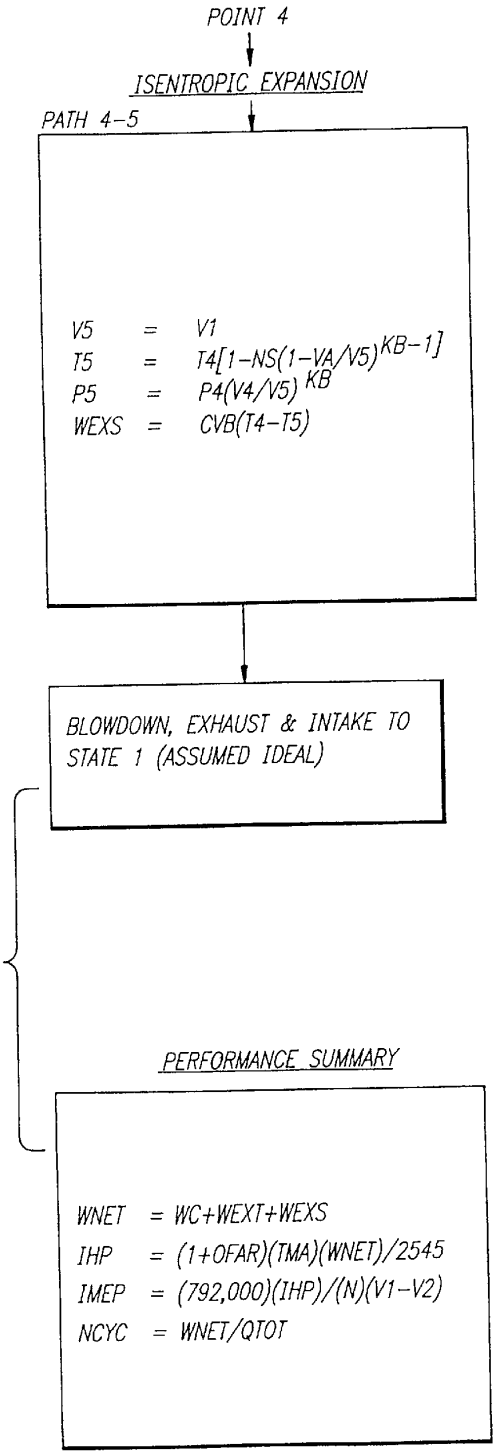

P5 = CYL. PRESSURE AT END OF ISENTROPIC EXP, PSIA

T5 = FLUID TEMP AT END OF ISENTROPIC EXP, °R

V5 = CYL. VOLUME AT END OF ISENTROPIC EXP, IN^3

KB = RATIO OF SPECIFIC HEATS, BURNED MIXTURE

WEXS = EXPANSION WORK, ISENTROPIC, BTU/lbm

CVB = SPECIFIC HEAT, CONSTANT VOLUME, BURNED MIX, BTU/lbm °R

WNET = NET INDICATED WORK, BTU/lbm

IHP = INDICATED HP (PER CYLINDER)

IMEP = INDICATED MEAN EFFECTIVE PRESSURE, PSIA

NCYC = INDICATED CYCLE EFFICIENCY

FIG. 6

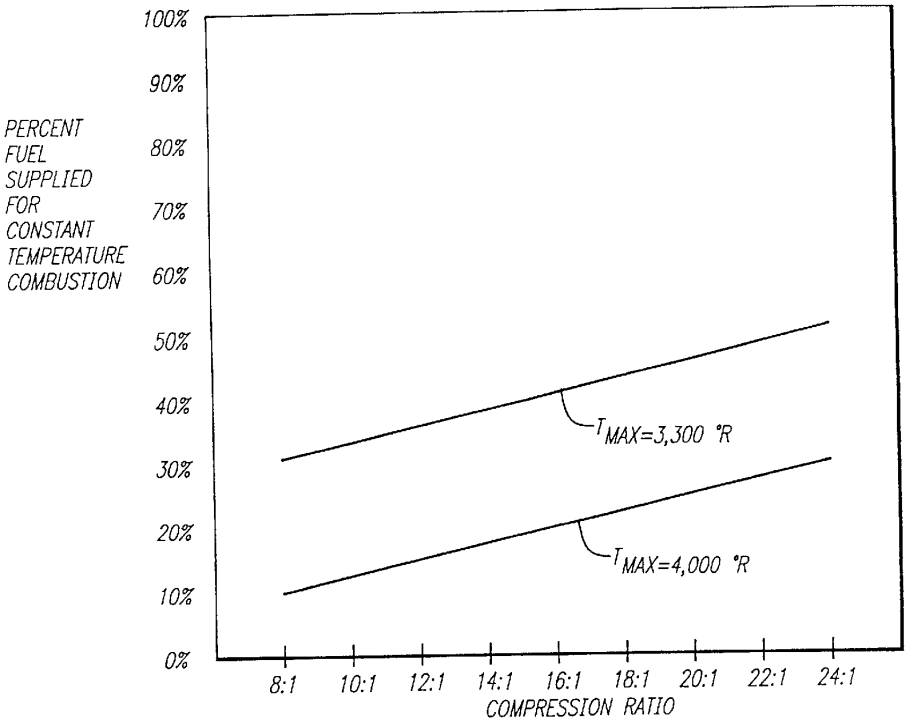
100%
90%
80%
70%
60%
50%
40%
30%
20%
10%
0%
PERCENT FUEL SUPPLIED FOR CONSTANT TEMPERATURE COMBUSTION
T_{MAX}=3,300 °R
T_{MAX}=4,000 °R
8:1
10:1
12:1
14:1
16:1
18:1
20:1
22:1
24:1
COMPRESSION RATIO

FIG. 7

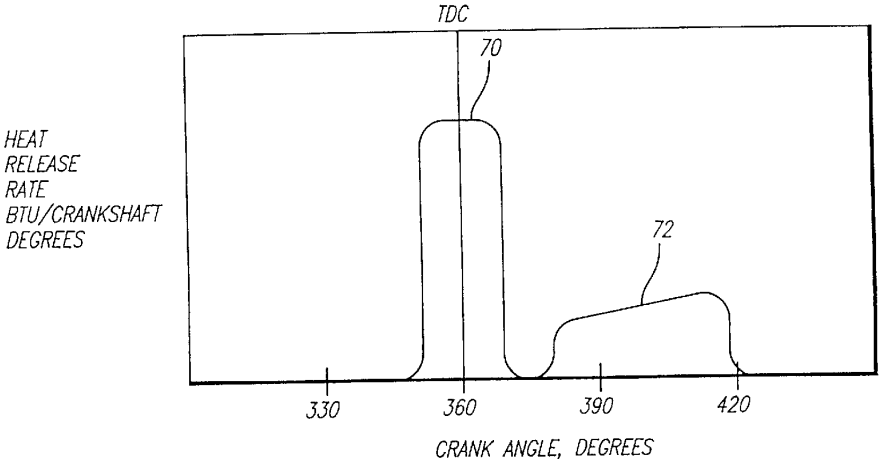
TDC
70
72
HEAT RELEASE RATE BTU/CRANKSHAFT DEGREES
330
360
390
420
CRANK ANGLE, DEGREES

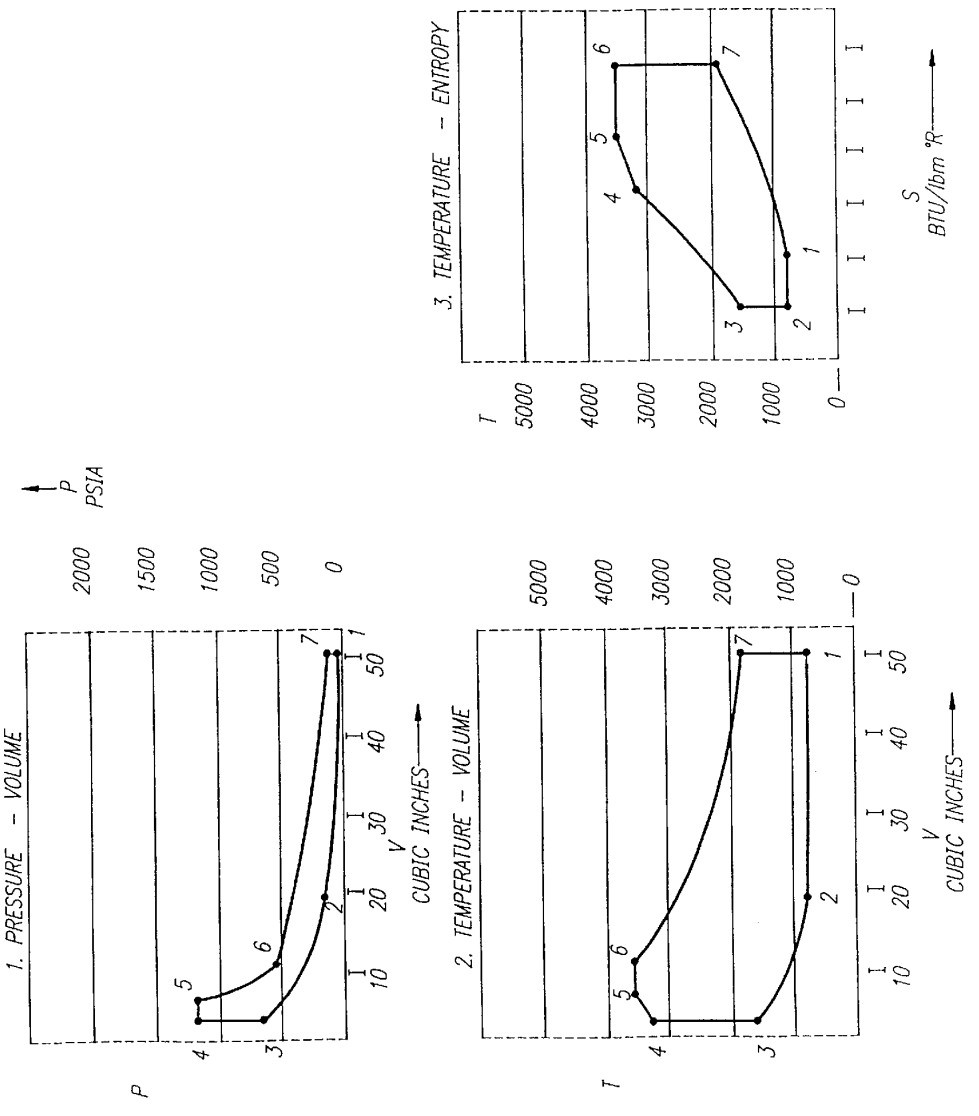
1. PRESSURE - VOLUME
P
PSIA
2000
1500
1000
500
0
V
CUBIC INCHES
10
20
30
40
50
2. TEMPERATURE - VOLUME
T
5000
4000
3000
2000
1000
0
3. TEMPERATURE - ENTROPY
S
BTU/lbm °R
1
2
3
4
5
6
7

FIG. 8

INTERNAL COMBUSTION ENGINE WITH LIMITED TEMPERATURE CYCLE

REFERENCE TO RELATED APPLICATIONS

This application is a continuation of U.S. application Ser. No. 08/685,651, filed Jul. 24, 1996, now U.S. Pat. No. 6,058,904, which is a continuation to and claims the benefit of U.S. application Ser. No. 08/466,817, filed Jun. 6, 1995, now U.S. Pat. No. 5,566,650, which is a continuation of application Ser. No. 08/146,832, filed Oct. 29, 1993, now U.S. Pat. No. 5,460,128, which in turn is a continuation of U.S. application Ser. No. 07/919,916, filed Jul. 29, 1992, now U.S. Pat. No. 5,265,562.

This application is also related to and claims the benefit of U.S. Provisional Application No. 60/001,617, filed Jul. 28, 1995, through U.S. application Ser. No. 08/685,651, filed Jul. 24, 1996.

FIELD OF THE INVENTION

The present invention relates generally to internal combustion engines and more particularly to expandable chamber piston engines operating in an open thermodynamic cycle.

BACKGROUND OF THE INVENTION

Automotive vehicle and engine manufacturers, fuel injection equipment suppliers and, indeed, society as a whole, share in the desire for efficient, effective transportation. The balance between combustion processes to produce power, and those processes which create pollution, is best addressed by enhancing the fundamental efficiency of the engine processes.

It is well known that the ideal Carnot Cycle, in which isothermal heat addition and rejection are combined with isentropic compression and expansion, is the most efficient engine cycle for any given upper and lower operating temperatures. However, the Carnot cycle is not practical for an expanding chamber piston engine due to the very high (over 50:1) compression ratio required to produce significant power. Nevertheless, a practical process which could make some use of the highly efficient Carnot process would be an advance in the art.

The most practical engine, and thus presently the most predominant, is the Otto cycle engine which includes a compression process of a fuel-air mixture followed by unregulated combustion. It is well known that for a given compression ratio the ideal Otto cycle is the most efficient expanding chamber piston engine since the Otto cycle combines high peak temperature with a practical average temperature of heat input. However, the high peak combustion temperature of an Otto engine can cause auto-ignition of a portion of the fuel-air mixture, resulting in engine noise and damage to the engine, as well as the creation of excess amounts of undesired NOx.

In the past, auto-ignition in Otto cycle engines was reduced by use of chemical additives to the fuel such as lead compounds (no longer permitted by law), manganese compounds (which cause spark plug deposits to build up, resulting in misfire), benzene (the use of which is presently being curtailed by legislative mandate) or fuel reformulations to prevent deleterious auto-ignition while meeting environmental goals. Auto-ignition can also be reduced by limiting the combustion temperature, either through use of a lower compression ratio (which reduces both power and efficiency), or by exhaust gas recirculation, lean-burn or stratified charge techniques, all of which cause power loss.

For general purpose road use, the engines of emission-constrained passenger cars are presently limited to useful compression of about 10:1. Above that limit the increased cost of the fuel control system and the additional cost of more platinum or rhodium for exhaust catalytic converters generally outweighs the benefit of higher compression ratios. A technology which would allow a practical Otto compression process to operate at compression ratios higher than 10:1 would be an advance in the art.

An improvement on the Otto cycle, as represented by a higher useful compression ratio, is an ideal Diesel cycle comprising isothermal heat addition and isochoric (constant volume) heat rejection combined with isentropic compression and expansion. This ideal Diesel cycle overcomes the fuel octane limit of the Otto cycle by utilizing air alone for the compression process and mixing the fuel with the process air as part of the combustion process. This allows use of a low octane-rated fuel, but requires cetane-rated fuel (enhanced auto-ignition). However, the isothermal process of the aforedescribed ideal Diesel cycle was found to be impractical, due to the extremely high compression ratio (50:1) required, and an alternate heat addition process (isobaric or constant pressure) was put into practice.

Another variation on the ideal Diesel cycle is the ideal limited pressure cycle including combined isochoric and isobaric heat addition, and isochoric heat rejection combined with isentropic compression and expansion. This combustion process allows an engine to be operated at moderate compression ratios (14:1 to 17:1 for large open chamber engines) as well as high compression ratios (20:1 to 25:1 for small displacement engines).

While Diesel-type engines are fuel efficient, due to their high compression ratio, they tend to be heavier and lower in power than an Otto engine of the same displacement. In addition, all direct injection engines of the Diesel type suffer from an ignition lag which reduces the control and effectiveness of the combustion process. One way to overcome this ignition lag is to preheat the fuel to 1,500° R before injection. This produces hypergolic combustion upon injection, but is an impractical method due to the short service life of the injector nozzle.

Hybrid engine processes have been developed incorporating characteristics of both diesel and spark ignition engines but these have proven impractical for road use. Examples of these hybrid processes include the Texaco TCCS, the Ford PROCO, Ricardo, MAN-FM and the KHD-AD. All employ open chamber, direct injection spark ignition engines using stratified charge techniques to improve efficiency. These developmental engines suffer substantial power loss because of ignition lag, incomplete utilization of the process air and poor mixing of the fuel/air charge.

Because the limits of current technology are thus being reached, there exists a need for an internal combustion engine that will provide a better balance between power production, fuel efficiency, pollution creation and pollution control by use of a more practical combination of thermodynamic processes.

SUMMARY OF THE INVENTION

Basically, the present invention meets the foregoing requirements and constraints by utilizing a new combination of thermodynamic processes which limits maximum combustion temperatures, thereby enabling an internal combustion engine to operate at a higher compression ratio, a higher power output or a lower peak temperature with a given fuel.

Broadly, in accordance with one exemplary embodiment, the invention is practiced by controlling the fuel quantity

and injection timing of a direct injection system in an internal combustion engine, so as to produce a combustion process consisting of a constant volume (isochoric) phase and a constant temperature (isothermal) phase. The limited temperature engine cycle so achieved allows the use of substantially higher compression ratios with a given fuel or with a given NOx emission limit, thereby providing a higher practical thermal efficiency than the standard lower compression ratio Otto cycle when measured by fuel/air analysis or by analyzing the test data of an actual engine.

In addition, the limited temperature cycle so achieved allows a higher power output and a lower NOx creation rate at a given compression ratio with a low quality fuel.

In accordance with another aspect of the invention, there is provided a new method of operating an expanding chamber internal combustion piston engine for providing limited temperature combustion. Such an engine includes at least one cylinder and an associated piston for forming a combustion chamber with the piston having a top dead center position; an operating cycle including an intake stroke, a compression stroke and an expansion stroke; and a fuel introduction system. The method of operating the engine pursuant to the invention comprises the steps of first forming a predetermined fuel/air mixture by introducing a predetermined fraction in one or more discrete quantities of the total fuel necessary for complete combustion of the process air. Next, the relatively lean fuel/air mixture so introduced is ignited when the piston is substantially at top dead center, this first phase of combustion thereby comprising a substantially isochoric or constant volume process. The fuel supplied for the isochoric process is an amount which will produce a greatly reduced temperature of the working fluid, as low as 3,300 degrees Rankine, or less, even at high compression ratios. Last, there is introduced, substantially at the beginning of the expansion stroke, a second fraction (in one or more discrete quantities) of the total fuel necessary for complete combustion. The combustion resulting from the introduction of the second fraction is a substantially isothermal process. The isothermal process occurs at a temperature which is significantly less than that attained in a comparable Otto cycle engine having the same or a substantially lower compression ratio. NO_X emissions are thereby limited and such reduction is obtained at lower cost than existing systems.

Those skilled in the art will recognize that the method of the present invention makes use of the Otto process for the first phase of the heat input or combustion process and the Carnot process for the second phase of heat input or combustion process. Comparison of the operating cycle of the invention with the standard Otto cycle using ideal fuel/air analysis shows an unexpected benefit from the invention: the overall operating efficiency of an engine (with a given compression ratio) will be greater using the limited temperature cycle of the present invention than when using the Otto cycle, when high temperature losses are considered. This increase in efficiency at a given compression ratio is a benefit derived from reduced cycle temperature.

Another advantage of the present invention is that it allows an engine to be operated more efficiently (at a higher compression ratio) than is possible with present engines. The most readily available motor vehicle gasoline fuels have combustion quality ratings of about 90 octane, which generally limits many engines to a compression ratio of about 10:1 for public road use. Since octane rating is indirectly related to high combustion temperature (high operating temperatures require high octane fuel), and the invention reduces the operating temperature, it follows that the invention enables the use of a higher engine compression ratio with a commensurate gain in engine efficiency.

In sum, the method of the present invention allows a practical engine to make use of an ideal process: during the isothermal combustion process, heat energy is converted directly to work. The invention utilizes present engine design and materials and may be practiced by modifying existing internal combustion engines to incorporate the desired compression ratio and appropriate fuel introduction systems.

BRIEF DESCRIPTION OF THE DRAWINGS

Further objects, advantages and features of the invention will become evident from the detailed description of the preferred embodiment when read in conjunction with the accompanying drawings in which:

FIG. **1** is a schematic representation of a portion of a four-cycle internal combustion engine utilizing the principles of the present invention;

FIG. **2** is a side elevation view, in cross section, of a solenoid-operated fuel injector which may be used in the engine depicted in FIG. **1**, the injector including a plunger cam providing fuel injection volumes and rates in accordance with the present invention;

FIG. **3** includes plots of (1) fuel injector plunger lift versus engine crank angle and (2) injected fuel volumes versus engine crank angle in accordance with one exemplary operating condition of an engine in accordance with the present invention;

FIG. **4** shows pressure-volume and related engine cycle diagrams further explaining the cycle of the present invention;

FIGS. **5**A–**5**C together depict a flow chart showing steps for analyzing the engine cycle of the present invention and for calculating engine performance and other operating parameters;

FIG. **6** includes plots of percent fuel supplied for constant temperature combustion vs. compression ratio for two maximum temperature (3,300° R and 4,000° R);

FIG. **7** is a plot of heat release rate vs. crank shaft angle for a process according to the invention having a maximum temperature of 3,300° R; and

FIG. **8** shows pressure-volume and related engine cycle diagrams relating to another embodiment of the invention.

DETAILED DESCRIPTION OF THE PREFERRED EMBODIMENTS

With reference to FIG. **1**, there is shown in schematic form a normally aspirated, four-cycle spark ignition engine **10** employing the teachings of the present invention. It will become evident to those skilled in the art that the advantages of the invention may be realized with two-cycle spark ignition engines, as well as Wankel rotary-type engines and those that are turbo- or supercharged. Further, although a single cylinder is shown in FIG. **1** for simplicity, it will be understood that an engine incorporating the invention will typically have multiple cylinders.

The engine **10** comprises a block **12**, a cylinder head **14** and a cylinder **16** having a piston **18** adapted to reciprocate between top and bottom dead centers within the cylinder **16** to define with the cylinder **16** a combustion chamber **20**. The reciprocating motion of the piston **18** is converted to rotational output motion by means of a connecting rod **22** and a crankshaft assembly **24**, all as well known in the art. As will

be explained in greater detail below, in accordance with the invention the compression ratio of the engine **10** will typically be substantially higher than that of a conventional automotive spark ignition internal combustion engine. For example, while a conventional engine may have a compression ratio of 8:1 to 10:1, an engine employing the teachings of the present invention may have a compression ratio of 18:1.

The engine **10** further includes an air induction system **26** including an air intake valve **28** in the cylinder head **14**. The valve **28**, along with an exhaust valve (not visible in FIG. **1**), is actuated by a conventional cam shaft **30** and related valve train mechanism **32**. Also mounted in the cylinder head **14** is a spark plug **34** whose energization is controlled and timed by means well known in the art.

Referring now also to FIG. **2**, fuel is supplied to the engine **10** by a fuel injection system **36** which precisely regulates the fuel/air mixture for combustion and exhaust emission control. The fuel injection system **36** includes an electrically actuated fuel injection pump **38** installed in or adjacent to the cylinder head **14** and adapted to inject predetermined quantities of fuel directly into the combustion chamber **20** via an injection line **40** and an injector nozzle **41** terminating inside the combustion chamber **20** and adjacent to the spark plug **34**. The injector pump **38** may, for example, take the form of a Model 200 fuel injection unit manufactured by AMBAC International, with a modified cam as described below and the addition of a solenoid **44**. The injector pump **38** has a fuel spill valve **42** operated against the bias of a spring **43** by the solenoid **44** energizable by a solenoid drive unit (SDU) **46**. The drive unit **46** is in turn controlled by an electronic control unit (ECU) **48** which monitors, by means of appropriate sensors, selected engine operating conditions such as intake and exhaust manifold pressures, engine speed, ignition firing position, throttle position, engine temperature, and so forth. Electrical signals representing these conditions are applied as inputs **50** to the control unit **48**. As is known in the art, the electronic control unit **48**, based on the multiple inputs **50**, electronically calculates the timing and metering of the fuel introduced into the combustion chamber **20** by the injection pump **38**.

Fuel is supplied to the fuel injector unit **38** by a feed pump (not shown) through a fuel line **52** at a sufficiently high pressure to produce proper fuel flow and to prevent vapor formation in the fuel system during extended high-temperature operation. When the solenoid **44** is energized by the solenoid drive unit **46**, the valve **42** closes and, because the displacement of the plunger **54** is known, the fuel quantity injected is controlled solely by varying the injector pulse width, that is, the duration the valve **42** is held closed.

The injector pump **38** includes a piston type pumping plunger **54** actuated by a cam **56** having a cam follower surface or cam lobe **58** in engagement with the plunger **54**; the cam **56** is rotatable at engine crank shaft speed.

As shown in FIG. **3**, the cam **56** has a lift profile, as a function of crank angle, having a first linear portion **60** rising from a base circle **62** to a maximum lift of about ½ inch through an angular crank displacement of about 180°, and a second linear portion **64** dropping back to the base circle in about 60° of crank displacement.

FIG. **3** shows a fuel injection schedule for a single, exemplary operating condition, namely, wide open throttle for a Limited Temperature Cycle, four-cycle engine having a compression ratio of 18:1 and a peak temperature of about 3,300° R. The fuel injection schedule of FIG. **3** provides for two successive injections of fuel volumes A and B. As already explained, the fuel volumes A and B are functions only of the durations that the injector **38** is active, as determined by the electronic control unit **48**.

Usually, a fuel injection pump is driven at camshaft speed, that is, at one half engine crankshaft speed. Here, the pump is rotated at engine crankshaft speed with the embodiment shown in FIG. **2** having its cam lobe **58** starting its lift essentially at the beginning of the engine intake stroke (0°). This provides a first fuel injection volume (shown as A in FIG. **3**) during the intake stroke, similar to an Otto engine. The pump cam **56** completes its first rotation at the end of the engine compression stroke (360°). The next rotation of the pump cam **56** will inject the second fuel volume (volume B) during the power stroke in a manner which produces essentially constant temperature combustion.

Fuel volume A, comprising about 56% of the total fuel required for complete combustion of the process air, is injected during the intake stroke of the piston **18** between about 10° and 120° (engine crank angle) after top dead center. Substantially at the end of the compression stroke (360° or top dead center), the second volume, B, comprising the remaining 44% of the total amount of fuel required for complete combustion, is injected, such second injection terminating at about 60° after TDC, i.e., at about 420°. Ignition by the spark plug **34** in the example under consideration will typically be provided at 5° to 10° before top dead center.

The combustion of the fuel/air mixture based on injected volume A comprises a first combustion phase which, as in the standard Otto cycle, is a substantially constant volume process. The first combustion phase will, of course, comprise a very lean mixture which, in the absence of the second phase of combustion to be described, would tend to markedly reduce engine power. The combustion of fuel volume B takes place at substantially constant temperature, that is, isothermally, providing both power and efficiency. It has been determined that the temperature at which this second combustion phase takes place is limited and less than that which would be attained in a standard Otto cycle engine of even modest compression ratio, for example, 8:1 or 10:1. Thus, the limited temperature cycle of the present invention permits the designer to dramatically increase the compression ratio of an engine for a given fuel, for example, to as high as about 18:1, providing all of the advantages, including high efficiency and power output, derived from a high compression ratio engine without the thermal, detonation and emission penalties.

A majority of the fuel is pre-mixed, generally 50% to 90%, for constant volume combustion. This first process is combined with a second fuel portion supplied during the combustion process at a rate to, first, limit maximum pressure, and second, limit maximum cylinder temperature.

The engine cycle of the present invention has a higher thermal efficiency than a Carnot cycle with the same average temperature of heat input.

FIG. **4** shows three engine cycle diagrams (pressure-volume, temperature-volume, and temperature-entropy) comparing examples of the limited temperature cycle of the present invention for two maximum combustion chamber temperatures (T_{max}), namely, 3,300° R and 4,300° R. The engine cycle of the first example (T_{max}=3,300° R) is defined by the points **1-2-3-4-5-1** in the diagrams of FIG. **4** and that of the second example (T_{max}=4,300° R) by the points **1-2-3'-4'-5'-1**. In FIG. **4**, path **1-2** is an 18:1 isentropic compression and paths **2-3** and **2-3'** are constant volume combustion processes using, in the first example, 56% of the

fuel necessary for complete combustion of the process air. Paths **3-4** and **3'-4'** are isothermal processes using, in the first example, the remaining 44% of the fuel. Paths **4-5** and **4'-5'** are isentropic expansion processes and paths **5-1** and **5'-1** are constant volume exhaust processes.

Using the ideal fuel/air analysis of FIGS. **5**A–**5**C, the conditions or rates at each point for the two examples of FIG. **4** may be calculated as follows:

FIRST EXAMPLE

CR=18.0 T_{max}=3300° R

Point **1**—Initial Conditions at BDC, Intake Stroke: where:

P1	=	initial pressure
V1	=	initial volume
T1	=	initial temperature
N	=	engine speed
N_s	=	compression/expansion efficiency
F/A	=	fuel/air ratio
M_a	=	air mass flow
LHV	=	fuel lower heating value
N_v	=	volumetric efficiency
NCOMB	=	combustion efficiency

Point **2**—Following Isentropic Compression (Path **1-2**):

$$K_a = 1.37$$

$$C_{v(air)} = .186\ \text{Btu/lbm} - °R$$

$$V2 = V1/CR = \frac{50.3}{18} = \underline{2.79\ \text{in}^3}$$

$$T2 = T1\left[\frac{\left(\frac{V1}{V2}\right)^{K-1} - 1}{N_S} + 1\right] = 530\left[\frac{(18^{.37}) - 1}{95} + 1\right] = \underline{1597° R}$$

$$P2 = P1\left(\frac{V1}{V2}\right)^{\kappa} = 14.7(18)^{1.37} = \underline{771\ psia}$$

$$WC = C_v(T1 - T2) = .136(530 - 1597) = \underline{-198\ \text{Btu/lbm}}$$

Point **3**—Following Limited Temp. Comb. @ Constant Volume (Path **2-3**):

$$T_3 = T\text{max} = \underline{3300° R}$$

$$P3 = P2(T3/T2) = (771)\left(\frac{3300}{1597}\right) = \underline{1593\ psia}$$

$$C_v(ex) = \underline{.242\ \text{Btu/lbm °R}}$$

$$V3 = V2 = \underline{2.79\ \text{in}^3}$$

$$Q_{c_v} = C_v(T3 - T2) = .242(3300 - 1597) = \underline{412\ \text{Btu/lbm}}$$

$$M_f = F/A(Ma) = (.0416)\cdot(130) = \underline{5.408\ \text{lb/hr}}$$

$$Q_{tot} = (M_f)(LHV) = (5.408)(18{,}300) = \underline{98{,}966\ \text{Btu/hr}}$$

$$Q_{\frac{cycle}{ex}} = \frac{(N_c)(QTOT)}{(1 + OFAR)(TMA)} = \frac{(1.0)(98{,}966)}{(1.0416)(130)} = \underline{731\ \text{Btu/lbm}}$$

$$Q_{cv}/Q_{cycle} = 412/731 = \underline{56.4\%} \leftarrow \underline{\%\ \text{of comb at c.v.}}$$

Point **4**—Following Constant Temperature Combustion and Expansion (Path **3-4**):

$$Q_{ct} = Q_{CYCLE} - Q_{cv} = 731 - 412 = \underline{319\ \text{Btu/lbm}} \leftarrow \underline{(43.6\%\ \text{at C.T.})}$$

-continued

$$T4 = T3 = \underline{3300° R}$$

$$V4 = (V3)e^{(Q_{CT}\frac{J}{RT4})} = (2.79)e^{\frac{(319)(778)}{(53.4)(3300)}} = \underline{11.41\ \text{in}^3}$$

$$P4 = P3\left(\frac{V3}{V4}\right) = 1593\left(\frac{2.79}{11.41}\right) = \underline{389\ psia}$$

$$W_{CTE} = \frac{(R)(T4)}{J}\left(\ln\frac{P3}{P4}\right)N_T = \frac{(53.4)(3300)}{778}\ln\left(\frac{1593}{389}\right)(.95) = \underline{303\ \text{Btu/lbm}}$$

Point **5**—Following Isentropic Expansion (Path **4-5**):

$$K_{ex} = 1.26$$

$$C_{pex} = .325$$

$$C_{vex} = .25$$

$$V_5 = V = \underline{50.3\ \text{in}^3}$$

$$T5 = T4\left[1 - N_S\left(1 - \left(\frac{V4}{V5}\right)^{K-1}\right)\right] = 3300\left[1 - .95\left(1 - \frac{11.41^{1.26-1}}{50.3}\right)\right] = \underline{2297° R}$$

$$P5 = P4\left(\frac{V4}{V5}\right)^{K_{ex}} = 389\left(\frac{11.41}{50.3}\right)^{1.26} = \underline{60\ psia}$$

$$W_{EX} = C_v(T4 - T5) = .25(3300 - 2297) = \underline{251\ \text{Btu/lbm}}$$

Performance Summary of Cycle of First Example:

$$W_{net} = WC + WEXT + WEX = -198 + 303 + 251 = \underline{356\ \text{Btu/lbm}}$$

$$IHP = \frac{(1 + F/A)(Ma)(W_{net})}{2545} = \frac{(1.0416)(130)(356)}{2545} = \underline{18.94\ HP}$$

$$IMEP = \frac{(792{,}000)(IHP)}{(N)(V1 - V2)} = \frac{(792000)(18.94)}{(2000)(50.3 - 2.79)} = \underline{158\ psia}$$

$$N_{cyc} = \frac{W_{net}}{Q_{tot}} = \frac{356}{731} = \underline{48.7\%}$$

SECOND EXAMPLE

Point **1**—Initial Conditions at BDC, Intake Stroke: Same as first example.

Point **2**—Following Isentropic Compression (Path **1-2**): Same as first example.

Point **3'**—Following Limited Temp. Comb. @ Constant Volume (Path **2-3'**):

$$T_{3'} = T\text{max} = \underline{4300° R}$$

$$P3' = P2(T3'/T2) = (771)\left(\frac{4300}{1597}\right) = \underline{2076\ psia}$$

$$C_v = (exh) = \underline{.242\ \text{Btu/lbm °R}}$$

$$V3' = V2 = \underline{2.79\ \text{in}^3}$$

$$Q_{c_v} = C_v(T3' - T2) = .242(4300 - 1597) = \underline{654\ \text{Btu/lbm}}$$

$$M_f = F/A(Ma) = (.0416)(130) = \underline{5.408\ \text{lb/hr}}$$

$$Q_{tot} = (M_f)(LHV) = (5.408)(18{,}300) = \underline{98{,}966\ \text{Btu/hr}}$$

$$Q_{\frac{cycle}{ex}} = \frac{(N_c)(QTOT)}{(1 + OFAR)(TMA)} = \frac{(1.0)(98{,}966)}{(1.0416)(130)} = \underline{731\ \text{Btu/lbm}}$$

$$Q_{cv}/Q_{cycle} = 654/731 = \underline{89.5\%} \leftarrow \underline{\%\ \text{of comb at c.v.}}$$

Point **4'**—Following Constant Temperature Combustion and Expansion (Path **3'-4'**):

$$Q_{ct} = Q_{CYCLE} - Q_{cv} = 731 - 654 = \underline{77\ \text{Btu/lbm}} \leftarrow \underline{(10.5\%\ \text{at}\ C.T.)}$$

$$T4' = T3' = \underline{4300°R}$$

$$V4' = (V3')e^{(Q_{ct}\frac{J}{RT4'})} = (2.79)e^{\frac{(77)(778)}{(53.4)(4300)}} = \underline{3.62\ \text{in}^3}$$

$$P4' = P3'\left(\frac{V3'}{V4'}\right) = 2076\left(\frac{2.79}{3.62}\right) = \underline{1600\ psia}$$

$$W_{CTE} = \frac{(R)(T4')}{J}\left(\ln\frac{P3'}{P4'}\right)N_T = \frac{(53.4)(4300)}{778}\ln\left(\frac{2076}{1600}\right)(.95) = \underline{72.9\ \text{Btu/lbm}}$$

Point **5'**—Following Isentropic Expansion (Path **4'-5'**):

$$K_{ex} = 1.26$$

$$C_{pex} = .325$$

$$C_{vex} = .25$$

$$V_5' = V_1 = \underline{50.3\ \text{in}^3}$$

$$T5' = T4'\left[1 - N_s\left(1 - \left(\frac{V4'}{V5'}\right)^{K-1}\right)\right] = 4300\left[1 - .95\left(1 - \frac{3.62^{1.26-1}}{50.3}\right)\right] = \underline{2.275°R}$$

$$P5' = P4'\left(\frac{V4'}{V5'}\right)^{K_{ex}} = 1600\left(\frac{3.62}{50.3}\right)^{1.26} = \underline{58\ psia}$$

$$W_{EX} = C_v(T4' - T5') = .25(4300 - 2275) = \underline{506\ \text{Btu/lbm}}$$

Performance Summary of Cycle of Second Example:

$$W_{net} = WC + WEXT + WEX = -198 + 72.9 + 506 = \underline{381\ \text{Btu/lbm}}$$

$$IHP = \frac{(1 + F/A)(Ma)(W_{net})}{2545} = \frac{(1.0416)(130)(3.81)}{2545} = \underline{20.27\ HP}$$

$$IMEP = \frac{(792{,}000)(IHP)}{(N)(V1 - V2)} = \frac{(792000)(20.27)}{(2000)(50.3 - 2.79)} = \underline{169\ psia}$$

$$N_{cyc} = \frac{W_{net}}{Q_{tot}} = \frac{381}{731} = \underline{52\%}$$

In another embodiment of the invention, the fuel supplied for the isochoric event may be an amount which will produce a temperature of the working fluid of around 4,000 degrees Rankine, somewhat less than that produced by unconstrained combustion, with the remainder of the fuel supplied proportional to the increase in volume during the power stroke, to produce essentially isothermal combustion. This embodiment will produce high power, while avoiding detonation at higher compression ratios.

FIG. **6** shows plots for two maximum combustion temperatures (3,300° R and 4,000° R), of percent fuel supplied for constant temperature combustion as a function of compression ratios ranging from 8:1 to 24:1.

FIG. **7** is a plot of heat release rate as a function of engine crankshaft angle for a maximum combustion temperature of 3,300° R (First Example, above). A first portion **70** of this plot shows the heat release rate for the constant volume process (path **2-3** in FIG. **4**). A second portion **72** of the plot shows the heat release rate for the isothermal process (path **3-4** in FIG. **4**).

With reference again to FIG. **3**, it will be evident to those skilled in the art that the invention may be applied to two cycle engines simply by scheduling the first injection (volume A) to take place at the beginning of the compression stroke and the second injection (volume B) to take place as in the four cycle engine. In the two cycle application, the active portion of the cam lobe must extend from the beginning of the compression stroke to the end of the isothermal combustion process. Since this is an extended duration with a significant non-utilized portion of the lift ramp, a constant radius portion on the cam can be used to avoid excessively high total cam lobe dimensions.

Instead of a fuel injection pump (as shown in FIG. **2**) those skilled in the art will understand that a solenoid-controlled unit injector can be used or, as a further alternative, a common rail fuel injection system, fed by a constant-flow, high-pressure pump, can be utilized with the injectors independently controlled by solenoids. Still further, it will be obvious to those skilled in the art that piezoelectric actuators may be substituted for the solenoids where very short injector energization times (that is, small fuel quantities) are required. Piezoelectric actuators may also be utilized to provide a higher degree of control over injection since such injectors may be used to inject multiple discrete quantities with the result that the process will more closely follow the ideal isothermal process paths. In accordance with yet another alternative, a piezoelectric device may be substituted for the pump plunger in a unit injector, thus eliminating the requirement for a cam to actuate the injector. To make such an application of a piezoelectric actuator practical, the piezoelectric device would be actuated multiple times (for example, 100 times) by the electronic control unit in order to inject the required total fuel quantities with a practical size piezoelectric element.

It will also be appreciated that the process diagrams of FIG. **4** show ideal processes. Real engine paths will depart to some extent from the ideal cycles shown due to timing, heat and friction losses. These factors will manifest themselves in the cycle diagram as, for example, rounded corners and displacements of the process lines.

To practice the present invention, it is also possible to combine a standard carburetor fuel introduction system with an injector. With reference to the example of FIG. **3**, with such a system, the carburetor would supply the first quantity (volume A) and the injector would supply the second quantity (volume B). The use of an injector for introducing both fuel charges is preferred, however, to minimize cost.

The invention can also be put into practice in combination with existing Otto, Diesel, lean-burn or stratified charge engine processes in the same engine at different loads or different operating conditions.

In some applications there will be a value to limiting maximum cylinder pressure. In that instance, the invention can make use of a further embodiment: a combination of constant volume combustion, constant pressure combustion, and constant temperature combustion. In this embodiment of the invention, heat is released during the constant volume process in such an amount as to reach the preferred pressure limit. Heat is then added at constant pressure until the preferred maximum temperature is reached. The remaining heat is added isothermally. An example of such an embodiment is shown in the process diagrams of FIG. **8**. An engine operated in accordance with this embodiment will include, with reference to FIG. **8**, the following process paths: path **1-2** is an isothermal compression process during which fuel is supplied. The fuel supplied early in the compression process serves two purposes: first, the heat of vaporization reduces the work of compression, second the combustion temperature is reduced proportional to the cooling provided by the fuel, and third, the early injection allows time for

preflame reactions to take place prior to the ignition time, thus reducing ignition lag (a significant problem for Diesel or other predominantly direct injection hybrid systems). Path **2-3** is an isentropic compression process, as already explained; path **3-4** is an isochoric combustion process with maximum pressure limited to a preselected value by proportioning fuel quantity A (FIG. **3**); path **4-5** is a constant pressure, i.e., isobaric, process provided by a first portion of fuel fraction B (FIG. **3**), said portion being of an amount so as to continue isobaric combustion until the preselected maximum combustion temperature is reached; path **5-6** is an isothermal combustion process at the preselected maximum combustion temperature; path **6-7** is an isentropic expansion process; and path **7-1** is an isochoric exhaust process. Each of the fuel introductions can comprise one or more discrete quantities so as to follow the ideal processes as closely as practicable.

With reference once again to FIG. **3**, an additional embodiment of the invention can be put into practice by subdividing the first fraction (volume A) of the total fuel quantity into one or more discrete injected fuel portions. For example, if two such portions were used, these would be designated portions A' and A", the sum of these two portions equalling the volume A. In accordance with one example of this embodiment, the first fuel portion A', comprising 40% of the total fuel, would be injected during the interval from 10° to 80° of engine crank shaft rotation and the second fuel portion A", comprising 16% of the total fuel, would be injected during the interval from 320° to 350° of engine crank rotation. This embodiment provides a chemically correct fuel/air mixture surrounding the spark plug for the first phase of combustion serving to extend the lean misfire limit as well as further reducing the creation of No_x by avoiding the presence of unburned oxygen in the first combustion phase.

With reference once again to FIG. **1**, this arrangement can readily be used to produce a lean overall fuel/air mixture in the entire combustion chamber **20**, along with an ignitable fuel/air mixture in that portion of the combustion chamber adjacent to the spark plug **34**. This spatial stratification will be in combination with temporal stratification with injection timing for the fuel portion A" provided by solenoid **44** actuation just prior to the time that the spark plug provides an ignition spark. When this arrangement is combined with inlet pressure, designated as point **1** on FIG. **4**(A), elevated from a naturally aspirated value of about 14.7 pounds per square inch absolute to a new value as high as about 40 pounds per square inch absolute (i.e., compressed air through super-or turbo-charging), the power density of an engine with a compression ratio of 14:1 and a lean overall fuel/air ratio of 40% of stoichiometric can equal or exceed the power density of an equivalent homogeneous charge naturally aspirated engine. In an arrangement such as this, inlet pressure at least as high as about 20 pounds per square inch absolute, typically, would be expected.

Along lines previously adverted to, an alternative arrangement to that of FIG. **1** can be put into practice by use of a high pressure pump to feed the fuel line **52**, eliminating the use of the individual plunger injection of pump **38** of FIG. **1**. Such an arrangement can be put into practice by use of a substitute injector pump, including a pumping plunger similar to the plunger **54** of FIG. **2**, but actuated by a piezoelectric device to engage the plunger rather than a cam such as the cam **56**. Then the piezoelectric actuator can be operated multiple times (for example in the range of 100 times), providing multiple injections for a given combustion activity or event. With such a piezoelectric device, a compression ratio, even higher than previously indicated herein, e.g., as high as about 24:1 is practical. A similar piezoelectric actuator could be substituted for the solenoid **44** of FIG. **1**. Piezoelectric materials developed by or in association with NASA Langeley Research Center, and known as the "Rainbow" and "Thunder" piezoelectric materials have design concerns related to those also of concern here.

By combining a higher compression ratio, as high as 24:1, with a lean burn and multiple injection, the limited temperature cycle can produce higher power combined with higher thermal efficiency while avoiding detonation (auto-ignition), at a compression ratio above the highest conventionally useful value.

A number of the matters herein are also discussed in a paper, D. C. Kruse and R. A. Yano, SAE (Society of Automotive Engineers), Technical Paper No. 951963 (1995), which is incorporated herein by reference.

It will also be understood that the invention can be used with various fuels such as natural gas, diesel, gasoline and methanol, as well as with multiple fuels including, for example, a combination of natural gas for the constant volume heat release process and diesel fuel for the isothermal heat release process.

What is claimed is:

1. A method of operating an internal combustion expanding chamber piston engine for providing limited temperature combustion, said engine having (1) at least one cylinder and an associated piston for forming a combustion chamber, said piston having a top dead center position, (2) an operating cycle including an intake stroke, a compression stroke and an expansion stroke, and (3) a fuel introduction system, said method comprising the steps of:

forming a fuel/air mixture by introducing a fraction of the total fuel for the cycle;

igniting the fuel/air mixture when the piston is substantially at top dead center; and

introducing at least one additional fraction of the total fuel for the cycle during combustion in a predetermined phase relationship to the top dead center position;

wherein the timing of the introduction of the fuel fractions and the quantities of the fuel fractions limit the maximum combustion temperature to achieve a lower emission value for nitrogen oxides.

2. A method as defined in claim **1**, wherein the maximum combustion temperature is substantially defined by an isothermal line on a pressure-volume diagram for a cylinder and cycle.

3. A method as defined in claim **3**, wherein the timing and quantities of the fuel fractions introduced into the combustion chamber produce a combustion temperature that is less than or equal to the temperature for the isothermal line.

4. A method as defined in claim **1**, wherein the fuel expansion stroke includes a substantially isentropic power delivery process.

5. A method of operating a spark ignition internal combustion expanding chamber piston engine for providing limited temperature combustion, said engine having (1) at least one cylinder and an associated piston for forming a combustion chamber, said piston having a top dead center position, (2) an operating cycle including an intake stroke, a compression stroke and an expansion stroke, and (3) a fuel introduction system, said method comprising the steps of:

forming a predetermined fuel/air mixture by introducing air compressed to at least 20 pounds per square inch and fuel for combustion of the air into the combustion chamber, the fuel/air mixture being substantially less than stoichiometric;

compressing the fuel/air mixture to a state less than the autoignition state of the fuel/air mixture with a compression ratio of at least 14:1;

igniting the fuel/air mixture when the piston is substantially at top dead center;

wherein the combustion of the fuel/air mixture is substantially a limited temperature process proceeding without autoignition.

6. A method as defined in claim **5**, wherein the fuel/air mixture is about 40% of stoichiometric.

7. A method of operating an internal combustion engine, said engine having an operating cycle including an intake process, a compression process followed by an expansion process which includes a heat input phase, the method including the step of introducing fuel into the combustion chamber during said intake process, the vaporization of the fuel so introduced substantially reducing the work of compression.

* * * * *

UNITED STATES PATENT AND TRADEMARK OFFICE

CERTIFICATE OF CORRECTION

PATENT NO. : 6,405,704 B2
DATED : June 18, 2002
INVENTOR(S) : Douglas C. Kruse

It is certified that error appears in the above-identified patent and that said Letters Patent is hereby corrected as shown below:

Title page,
Item [*], add the following statement:
-- This patent is subject to a terminal disclaimer --.

Item [63], **Related U.S. Application Data**, after "Pat. No. 6,058,904," delete "is a continuation of", and replace with -- which claims benefit of --.

Column 1,
Line 7, delete "which is a continuation to" and replace with -- which is related to --.

Column 2,
Line 63, change "temperatures" to read -- temperature --.

Column 7,
Line 13, delete "where:" and add the following:
-- P1 = 14.7 psia
V1 = 50.3 in^3
T1 = 530°R
N_s = .95
F/A = .0416
M_a = 130 lb/hr
LHV = 18,300 Btu/lb
N_v = 100%
NCOMB = 100%
where: --.
Line 39, change "136", to read -- 186 --.

Signed and Sealed this

Twenty-fifth Day of March, 2003



JAMES E. ROGAN
Director of the United States Patent and Trademark Office

Exhibit C

UNITED STATES PATENT AND TRADEMARK OFFICE

CERTIFICATE OF CORRECTION

PATENT NO. : 6,405,704 B2
DATED : June 18, 2002
INVENTOR(S) : Douglas C. Kruse

It is certified that error appears in the above-identified patent and that said Letters Patent is hereby corrected as shown below:

Column 12,
Line 48, change "3" to read -- 2 --.

Signed and Sealed this

Fifteenth Day of July, 2003

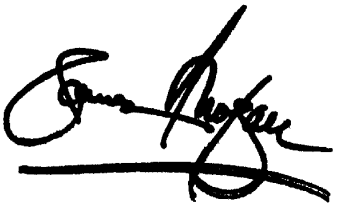

JAMES E. ROGAN
Director of the United States Patent and Trademark Office

Exhibit C

UNITED STATES DISTRICT COURT
CENTRAL DISTRICT OF CALIFORNIA

NOTICE OF ASSIGNMENT TO UNITED STATES MAGISTRATE JUDGE FOR DISCOVERY

This case has been assigned to District Judge Dean D. Pregerson and the assigned discovery Magistrate Judge is Fernando M. Olguin.

The case number on all documents filed with the Court should read as follows:

CV09- 3710 DDP (FMOx)

Pursuant to General Order 05-07 of the United States District Court for the Central District of California, the Magistrate Judge has been designated to hear discovery related motions.

All discovery related motions should be noticed on the calendar of the Magistrate Judge

==========

NOTICE TO COUNSEL

A copy of this notice must be served with the summons and complaint on all defendants (if a removal action is filed, a copy of this notice must be served on all plaintiffs).

Subsequent documents must be filed at the following location:

[X] **Western Division** **312 N. Spring St., Rm. G-8** **Los Angeles, CA 90012**	[ ] **Southern Division** **411 West Fourth St., Rm. 1-053** **Santa Ana, CA 92701-4516**	[ ] **Eastern Division** **3470 Twelfth St., Rm. 134** **Riverside, CA 92501**

Failure to file at the proper location will result in your documents being returned to you.

UNITED STATES DISTRICT COURT
CENTRAL DISTRICT OF CALIFORNIA

KRUSE TECHNOLOGY PARTNERSHIP PLAINTIFF(S) v. ISUZU MOTORS LIMITED, ISUZU NORTH AMERICA CORPORATION, and ISUZU COMMERCIAL TRUCK OF AMERICA, INC. DEFENDANT(S) .	CASE NUMBER **CV09 -3710 DDP (FMOx)** **SUMMONS**

TO: DEFENDANT(S): _____

A lawsuit has been filed against you.

Within 20 days after service of this summons on you (not counting the day you received it), you must serve on the plaintiff an answer to the attached [X] complaint [ ] _____ amended complaint [ ] counterclaim [ ] cross-claim or a motion under Rule 12 of the Federal Rules of Civil Procedure. The answer or motion must be served on the plaintiff's attorney, John B. Sganga, Jr. , whose address is 2040 Main St., Fourteenth Floor, Irvine, CA 92614 . If you fail to do so, judgment by default will be entered against you for the relief demanded in the complaint. You also must file your answer or motion with the court.

Clerk, U.S. District Court

Dated: MAY 26 2009

By: DODJIE GARGANTOS SEAL
Deputy Clerk

(Seal of the Court)

[Use 60 days if the defendant is the United States or a United States agency, or is an officer or employee of the United States. Allowed 60 days by Rule 12(a)(3)].

UNITED STATES DISTRICT COURT, CENTRAL DISTRICT OF CALIFORNIA

CIVIL COVER SHEET

I (a) PLAINTIFFS (Check box if you are representing yourself ☐)

KRUSE TECHNOLOGY PARTNERSHIP

DEFENDANTS

ISUZU MOTORS LIMITED, ISUZU NORTH AMERICA CORPORATION, and ISUZU COMMERCIAL TRUCK OF AMERICA, INC.

(b) Attorneys (Firm Name, Address and Telephone Number. If you are representing yourself, provide same.)

John B. Sganga, Jr. (SBN #116,211)
KNOBBE MARTENS OLSON & BEAR LLP
2040 Main Street, Fourteenth Floor

Irvine, CA 92614
949-760-0404

Attorneys (If Known)

II. BASIS OF JURISDICTION (Place an X in one box only.)

☐ 1 U.S. Government Plaintiff
☒ 3 Federal Question (U.S. Government Not a Party)
☐ 2 U.S. Government Defendant
☐ 4 Diversity (Indicate Citizenship of Parties in Item III)

III. CITIZENSHIP OF PRINCIPAL PARTIES - For Diversity Cases Only (Place an X in one box for plaintiff and one for defendant.)

	PTF	DEF		PTF	DEF
Citizen of This State	☐ 1	☐ 1	Incorporated or Principal Place of Business in this State	☐ 4	☐ 4
Citizen of Another State	☐ 2	☐ 2	Incorporated and Principal Place of Business in Another State	☐ 5	☐ 5
Citizen or Subject of a Foreign Country	☐ 3	☐ 3	Foreign Nation	☐ 6	☐ 6

IV. ORIGIN (Place an X in one box only.)

☒ 1 Original Proceeding ☐ 2 Removed from State Court ☐ 3 Remanded from Appellate Court ☐ 4 Reinstated or Reopened ☐ 5 Transferred from another district (specify): ☐ 6 Multi-District Litigation ☐ 7 Appeal to District Judge from Magistrate Judge

V. REQUESTED IN COMPLAINT: JURY DEMAND: ☒ Yes ☐ No (Check 'Yes' only if demanded in complaint.)

CLASS ACTION under F.R.C.P. 23: ☐ Yes ☒ No ☒ **MONEY DEMANDED IN COMPLAINT: $** TBD

VI. CAUSE OF ACTION (Cite the U.S. Civil Statute under which you are filing and write a brief statement of cause. Do not cite jurisdictional statutes unless diversity.)

Patent Infringement 35 USC Sec. 271 & Sec. 281; 35 USC Sec. 100 et. seq.

VII. NATURE OF SUIT (Place an X in one box only.)

OTHER STATUTES
- ☐ 400 State Reapportionment
- ☐ 410 Antitrust
- ☐ 430 Banks and Banking
- ☐ 450 Commerce/ICC Rates/etc.
- ☐ 460 Deportation
- ☐ 470 Racketeer Influenced and Corrupt Organizations
- ☐ 480 Consumer Credit
- ☐ 490 Cable/Sat TV
- ☐ 810 Selective Service
- ☐ 850 Securities/Commodities/ Exchange
- ☐ 875 Customer Challenge 12 USC 3410
- ☐ 890 Other Statutory Actions
- ☐ 891 Agricultural Act
- ☐ 892 Economic Stabilization Act
- ☐ 893 Environmental Matters
- ☐ 894 Energy Allocation Act
- ☐ 895 Freedom of Info. Act
- ☐ 900 Appeal of Fee Determination Under Equal Access to Justice
- ☐ 950 Constitutionality of State Statutes

CONTRACT
- ☐ 110 Insurance
- ☐ 120 Marine
- ☐ 130 Miller Act
- ☐ 140 Negotiable Instrument
- ☐ 150 Recovery of Overpayment & Enforcement of Judgment
- ☐ 151 Medicare Act
- ☐ 152 Recovery of Defaulted Student Loan (Excl. Veterans)
- ☐ 153 Recovery of Overpayment of Veteran's Benefits
- ☐ 160 Stockholders' Suits
- ☐ 190 Other Contract
- ☐ 195 Contract Product Liability
- ☐ 196 Franchise

REAL PROPERTY
- ☐ 210 Land Condemnation
- ☐ 220 Foreclosure
- ☐ 230 Rent Lease & Ejectment
- ☐ 240 Torts to Land
- ☐ 245 Tort Product Liability
- ☐ 290 All Other Real Property

TORTS PERSONAL INJURY
- ☐ 310 Airplane
- ☐ 315 Airplane Product Liability
- ☐ 320 Assault, Libel & Slander
- ☐ 330 Fed. Employers' Liability
- ☐ 340 Marine
- ☐ 345 Marine Product Liability
- ☐ 350 Motor Vehicle
- ☐ 355 Motor Vehicle Product Liability
- ☐ 360 Other Personal Injury
- ☐ 362 Personal Injury-Med Malpractice
- ☐ 365 Personal Injury-Product Liability
- ☐ 368 Asbestos Personal Injury Product Liability

IMMIGRATION
- ☐ 462 Naturalization Application
- ☐ 463 Habeas Corpus-Alien Detainee
- ☐ 465 Other Immigration Actions

TORTS PERSONAL PROPERTY
- ☐ 370 Other Fraud
- ☐ 371 Truth in Lending
- ☐ 380 Other Personal Property Damage
- ☐ 385 Property Damage Product Liability

BANKRUPTCY
- ☐ 422 Appeal 28 USC 158
- ☐ 423 Withdrawal 28 USC 157

CIVIL RIGHTS
- ☐ 441 Voting
- ☐ 442 Employment
- ☐ 443 Housing/Accommodations
- ☐ 444 Welfare
- ☐ 445 American with Disabilities - Employment
- ☐ 446 American with Disabilities - Other
- ☐ 440 Other Civil Rights

PRISONER PETITIONS
- ☐ 510 Motions to Vacate Sentence Habeas Corpus
- ☐ 530 General
- ☐ 535 Death Penalty
- ☐ 540 Mandamus/ Other
- ☐ 550 Civil Rights
- ☐ 555 Prison Condition

FORFEITURE/ PENALTY
- ☐ 610 Agriculture
- ☐ 620 Other Food & Drug
- ☐ 625 Drug Related Seizure of Property 21 USC 881
- ☐ 630 Liquor Laws
- ☐ 640 R.R. & Truck
- ☐ 650 Airline Regs
- ☐ 660 Occupational Safety/Health
- ☐ 690 Other

LABOR
- ☐ 710 Fair Labor Standards Act
- ☐ 720 Labor/Mgmt. Relations
- ☐ 730 Labor/Mgmt. Reporting & Disclosure Act
- ☐ 740 Railway Labor Act
- ☐ 790 Other Labor Litigation
- ☐ 791 Empl. Ret. Inc. Security Act

PROPERTY RIGHTS
- ☐ 820 Copyrights
- ☒ 830 Patent
- ☐ 840 Trademark

SOCIAL SECURITY
- ☐ 861 HIA (1395ff)
- ☐ 862 Black Lung (923)
- ☐ 863 DIWC/DIWW (405(g))
- ☐ 864 SSID Title XVI
- ☐ 865 RSI (405(g))

FEDERAL TAX SUITS
- ☐ 870 Taxes (U.S. Plaintiff or Defendant)
- ☐ 871 IRS - Third Party 26 USC 7609

CV09 -3710 DDP (FMOx)

FOR OFFICE USE ONLY: Case Number: _____

AFTER COMPLETING THE FRONT SIDE OF FORM CV-71, COMPLETE THE INFORMATION REQUESTED BELOW.

UNITED STATES DISTRICT COURT, CENTRAL DISTRICT OF CALIFORNIA

CIVIL COVER SHEET

VIII(a). IDENTICAL CASES: Has this action been previously filed in this court and dismissed, remanded or closed? [X] No [ ] Yes

If yes, list case number(s): _____

VIII(b). RELATED CASES: Have any cases been previously filed in this court that are related to the present case? [ ] No [X] Yes

If yes, list case number(s): SACV 08-1452 JVS (JWJx); SACV 09-0458 JVS (JWJx)

Civil cases are deemed related if a previously filed case and the present case:

(Check all boxes that apply)

- [ ] A. Arise from the same or closely related transactions, happenings, or events; or
- [ ] B. Call for determination of the same or substantially related or similar questions of law and fact; or
- [ ] C. For other reasons would entail substantial duplication of labor if heard by different judges; or
- [X] D. Involve the same patent, trademark or copyright, and one of the factors identified above in a, b or c also is present.

IX. VENUE: (When completing the following information, use an additional sheet if necessary.)

(a) List the County in this District; California County outside of this District; State if other than California; or Foreign Country, in which **EACH** named plaintiff resides.

[ ] Check here if the government, its agencies or employees is a named plaintiff. If this box is checked, go to item (b).

County in this District:*	California County outside of this District; State, if other than California; or Foreign Country
Orange County	

(b) List the County in this District; California County outside of this District; State if other than California; or Foreign Country, in which **EACH** named defendant resides.

[ ] Check here if the government, its agencies or employees is a named defendant. If this box is checked, go to item (c).

County in this District:*	California County outside of this District; State, if other than California; or Foreign Country
Los Angeles	Japan

(c) List the County in this District; California County outside of this District; State if other than California; or Foreign Country, in which **EACH** claim arose.

Note: In land condemnation cases, use the location of the tract of land involved.

County in this District:*	California County outside of this District; State, if other than California; or Foreign Country
Los Angeles County; Orange County	

*** Los Angeles, Orange, San Bernardino, Riverside, Ventura, Santa Barbara, or San Luis Obispo Counties**

Note: In land condemnation cases, use the location of the tract of land involved

X. SIGNATURE OF ATTORNEY (OR PRO PER): _____ **Date** May 26, 2009

John B. Sganga, Jr.

Notice to Counsel/Parties: The CV-71 (JS-44) Civil Cover Sheet and the information contained herein neither replace nor supplement the filing and service of pleadings or other papers as required by law. This form, approved by the Judicial Conference of the United States in September 1974, is required pursuant to Local Rule 3-1 is not filed but is used by the Clerk of the Court for the purpose of statistics, venue and initiating the civil docket sheet. (For more detailed instructions, see separate instructions sheet.)

Key to Statistical codes relating to Social Security Cases:

Nature of Suit Code	Abbreviation	Substantive Statement of Cause of Action
861	HIA	All claims for health insurance benefits (Medicare) under Title 18, Part A, of the Social Security Act, as amended. Also, include claims by hospitals, skilled nursing facilities, etc., for certification as providers of services under the program. (42 U.S.C. 1935FF(b))
862	BL	All claims for "Black Lung" benefits under Title 4, Part B, of the Federal Coal Mine Health and Safety Act of 1969. (30 U.S.C. 923)
863	DIWC	All claims filed by insured workers for disability insurance benefits under Title 2 of the Social Security Act, as amended; plus all claims filed for child's insurance benefits based on disability. (42 U.S.C. 405(g))
863	DIWW	All claims filed for widows or widowers insurance benefits based on disability under Title 2 of the Social Security Act, as amended. (42 U.S.C. 405(g))
864	SSID	All claims for supplemental security income payments based upon disability filed under Title 16 of the Social Security Act, as amended.
865	RSI	All claims for retirement (old age) and survivors benefits under Title 2 of the Social Security Act, as amended. (42 U.S.C. (g))