EXHIBIT A

US007970634B2

(12) **United States Patent**
Backhaus et al.

(10) **Patent No.: US 7,970,634 B2**
(45) **Date of Patent: *Jun. 28, 2011**

(54) **MULTIPLE RESOURCE PLANNING SYSTEM**

(75) Inventors: **Brent Backhaus**, Lakeville, MN (US); **Lorna Lusic**, Lakeville, MN (US); **Dean Ebesu**, San Francisco, CA (US)

(73) Assignee: **Virtual Radiologic Corporation**, Minneapolis, MN (US)

(*) Notice: Subject to any disclaimer, the term of this patent is extended or adjusted under 35 U.S.C. 154(b) by 0 days.

This patent is subject to a terminal disclaimer.

(21) Appl. No.: **12/882,479**

(22) Filed: **Sep. 15, 2010**

(65) **Prior Publication Data**

US 2011/0004490 A1 Jan. 6, 2011

Related U.S. Application Data

(63) Continuation of application No. 12/783,073, filed on May 19, 2010, which is a continuation of application No. 11/288,645, filed on Nov. 28, 2005, now Pat. No. 7,729,928.

(60) Provisional application No. 60/656,215, filed on Feb. 25, 2005, provisional application No. 60/682,052, filed on May 17, 2005, provisional application No. 60/694,880, filed on Jun. 29, 2005, provisional application No. 60/699,119, filed on Jul. 14, 2005, provisional application No. 60/740,454, filed on Nov. 28, 2005, provisional application No. 60/740,589, filed on Nov. 28, 2005, provisional application No. 60/740,527, filed on Nov. 28, 2005.

(51) **Int. Cl.**
G06F 19/00 (2006.01)

(52) **U.S. Cl.** **705/3**

(58) **Field of Classification Search** 705/2, 3, 705/4, 37; 707/10; 600/300, 437; 364/413.01
See application file for complete search history.

(56) **References Cited**

U.S. PATENT DOCUMENTS

6,603,494	B1	8/2003	Banks et al.
7,562,026	B2	7/2009	DelMonego et al.
2006/0053035	A1	3/2006	Eisenberg

OTHER PUBLICATIONS

Rashid N. Khan; Business Process Management: A Practical Guide; Sep. 2004; pp. 103-124.
Rashid N. Khan; Business Process Management: A Practical Guide; Sep. 2004; p. 179.
Rashid N. Khan; Business Process Management: A Practical Guide; Sep. 2004; pp. 207-222.
Rashid N. Khan; Business Process Management: A Practical Guide; Smart Ways of Routing Work; (Excerpt) Sep. 2004; pp. 1-4.
John E. Collins and Elizabeth M. Sisley; IEEE Reference "Automated Assignment and Scheduling of Service Personnel", 3M Company, p. 35, Apr. 1994.
ExParte Reexamination Request mailed Dec. 17, 2010 in re: Backhaus et al., Patent No. 7,729,928.

Primary Examiner — Gerald J. O'Connor
Assistant Examiner — John A Pauls
(74) *Attorney, Agent, or Firm* — Schwegman, Lundberg & Woessner, P.A.

(57) **ABSTRACT**

A system for managing remote doctor medical request workflow may include a workflow module that optimizes assignments of medical requests to remote doctors based on parameterized doctor and scheduling information and may further include a forecasting module that predicts the hospital credentials, state licenses or doctors needed to fulfill a projected volume of future medical requests. In one embodiment, radiologists are parameterized and then matched with requests for radiological readings based on information extracted from DICOM image headers and merged with associated information contained in a medical work order. In this embodiment, the radiologists are parameterized based on their locations, schedules, hospital credentials, state licensing, compensation metrics, and performance metrics and incoming requests for review of CT scans and the like are filtered based on the parameterized radiologist information to identify one or more radiologists who are to fulfill the medical request.

23 Claims, 7 Drawing Sheets

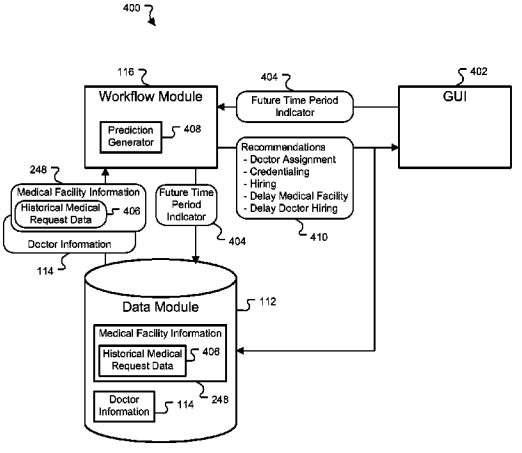

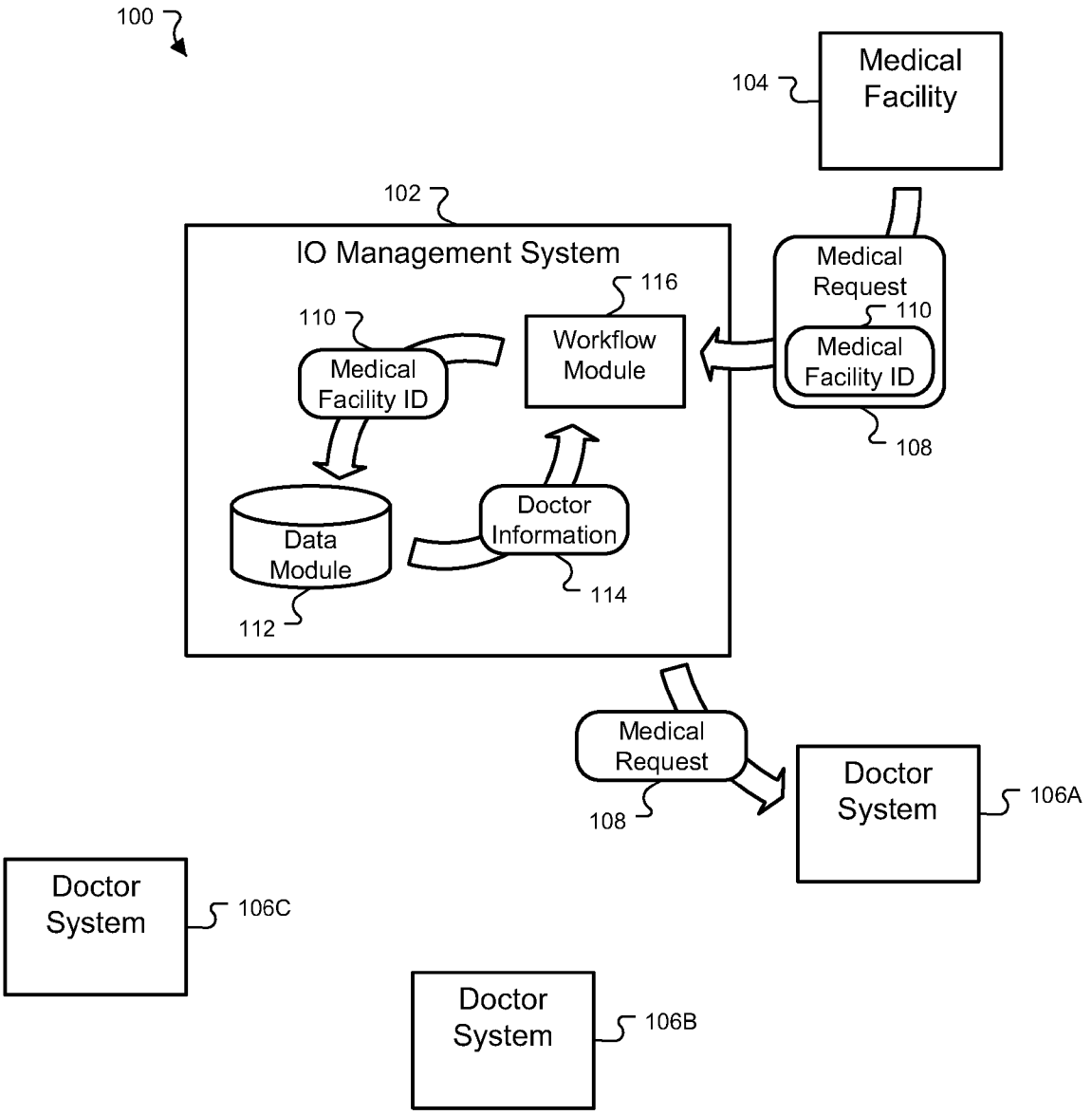
100
104
Medical Facility
102
IO Management System
116
110
Workflow Module
Medical Facility ID
Medical Request
110
Medical Facility ID
108
Data Module
112
Doctor Information
114
Medical Request
108
Doctor System
106A
Doctor System
106C
Doctor System
106B

FIG. 1

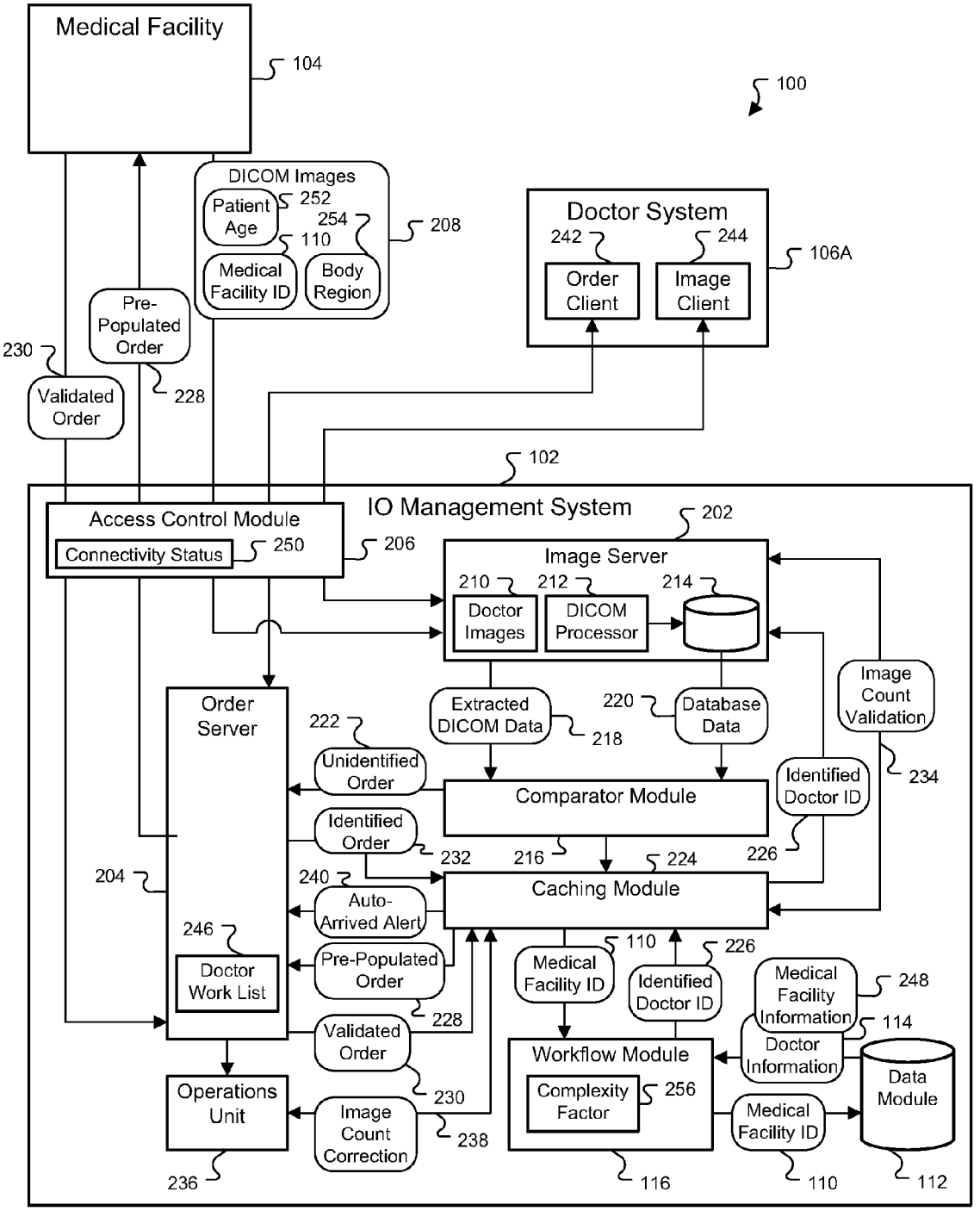
Medical Facility
104
100
DICOM Images
Patient Age
252
254
110
Medical Facility ID
Body Region
208
Doctor System
242
244
Order Client
Image Client
106A
Pre-Populated Order
228
230
Validated Order
102
IO Management System
202
Access Control Module
Connectivity Status
250
206
Image Server
210
212
214
Doctor Images
DICOM Processor
Image Count Validation
234
Order Server
Extracted DICOM Data
218
220
Database Data
222
Unidentified Order
Comparator Module
Identified Doctor ID
226
Identified Order
232
216
224
204
240
Auto-Arrived Alert
Caching Module
246
Doctor Work List
Pre-Populated Order
228
110
Medical Facility ID
226
Identified Doctor ID
Medical Facility Information
248
114
Doctor Information
Validated Order
230
Workflow Module
Complexity Factor
256
Data Module
Operations Unit
Image Count Correction
238
Medical Facility ID
236
116
110
112

FIG. 2

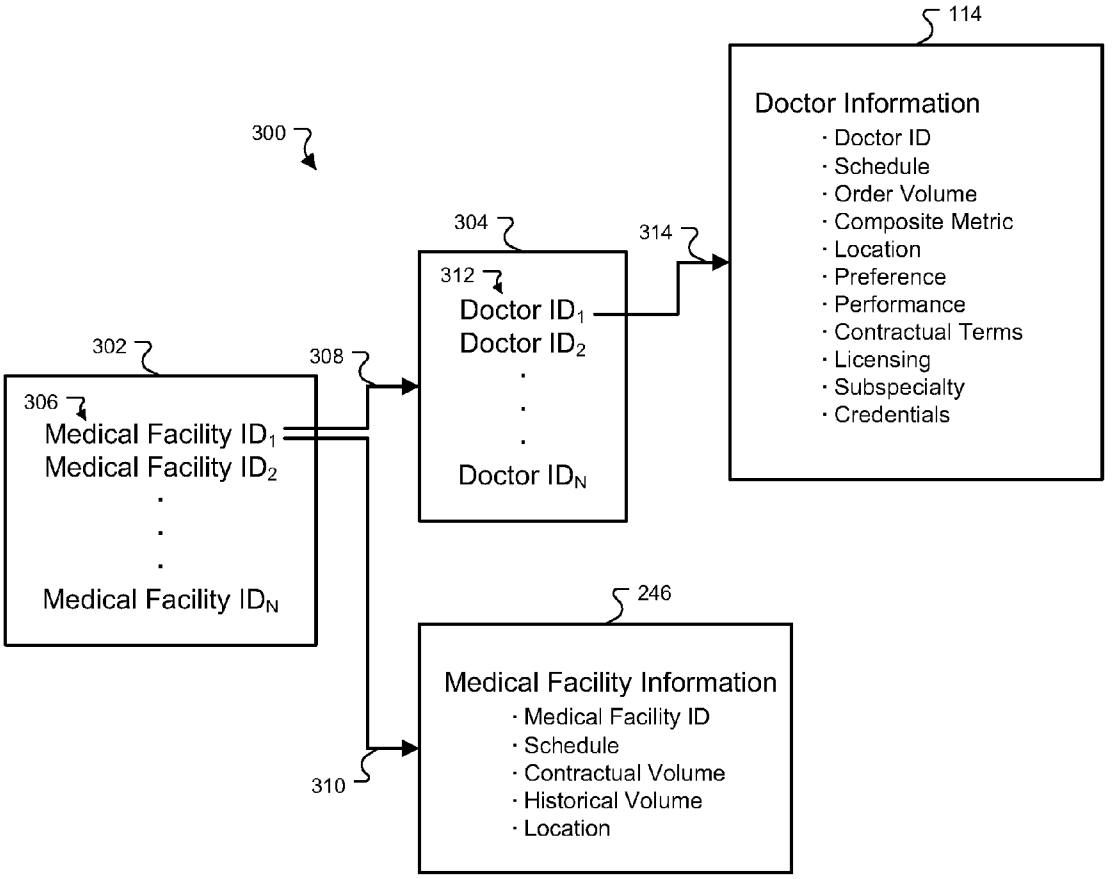
114
Doctor Information
· Doctor ID
· Schedule
· Order Volume
· Composite Metric
· Location
· Preference
· Performance
· Contractual Terms
· Licensing
· Subspecialty
· Credentials
300
304
314
312
Doctor ID1
Doctor ID2
Doctor IDN
302
308
306
Medical Facility ID1
Medical Facility ID2
Medical Facility IDN
246
Medical Facility Information
· Medical Facility ID
· Schedule
· Contractual Volume
· Historical Volume
· Location
310

FIG. 3

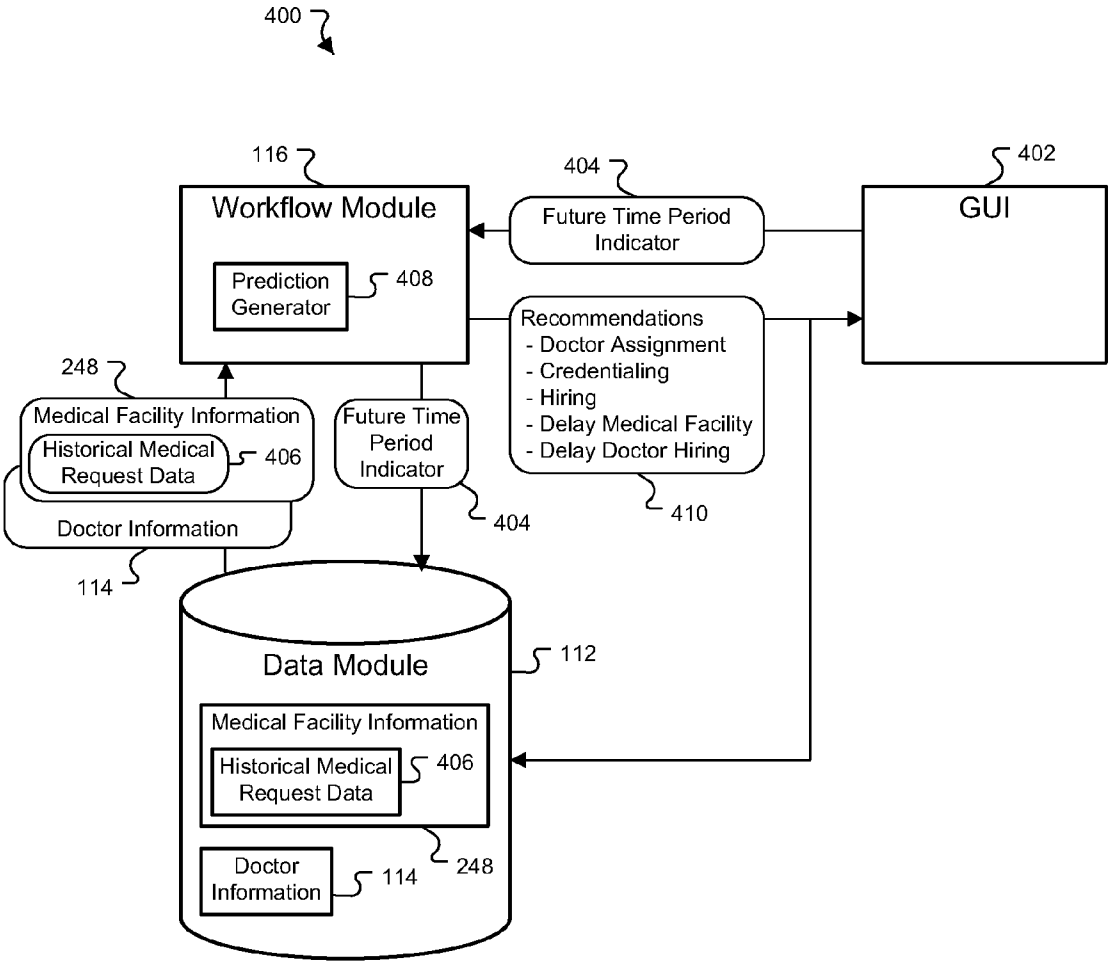
400
116
Workflow Module
Prediction Generator
408
404
Future Time Period Indicator
402
GUI
Recommendations
- Doctor Assignment
- Credentialing
- Hiring
- Delay Medical Facility
- Delay Doctor Hiring
410
248
Medical Facility Information
Historical Medical Request Data
406
Doctor Information
114
Future Time Period Indicator
404
Data Module
112
Medical Facility Information
Historical Medical Request Data
406
248
Doctor Information
114

FIG. 4

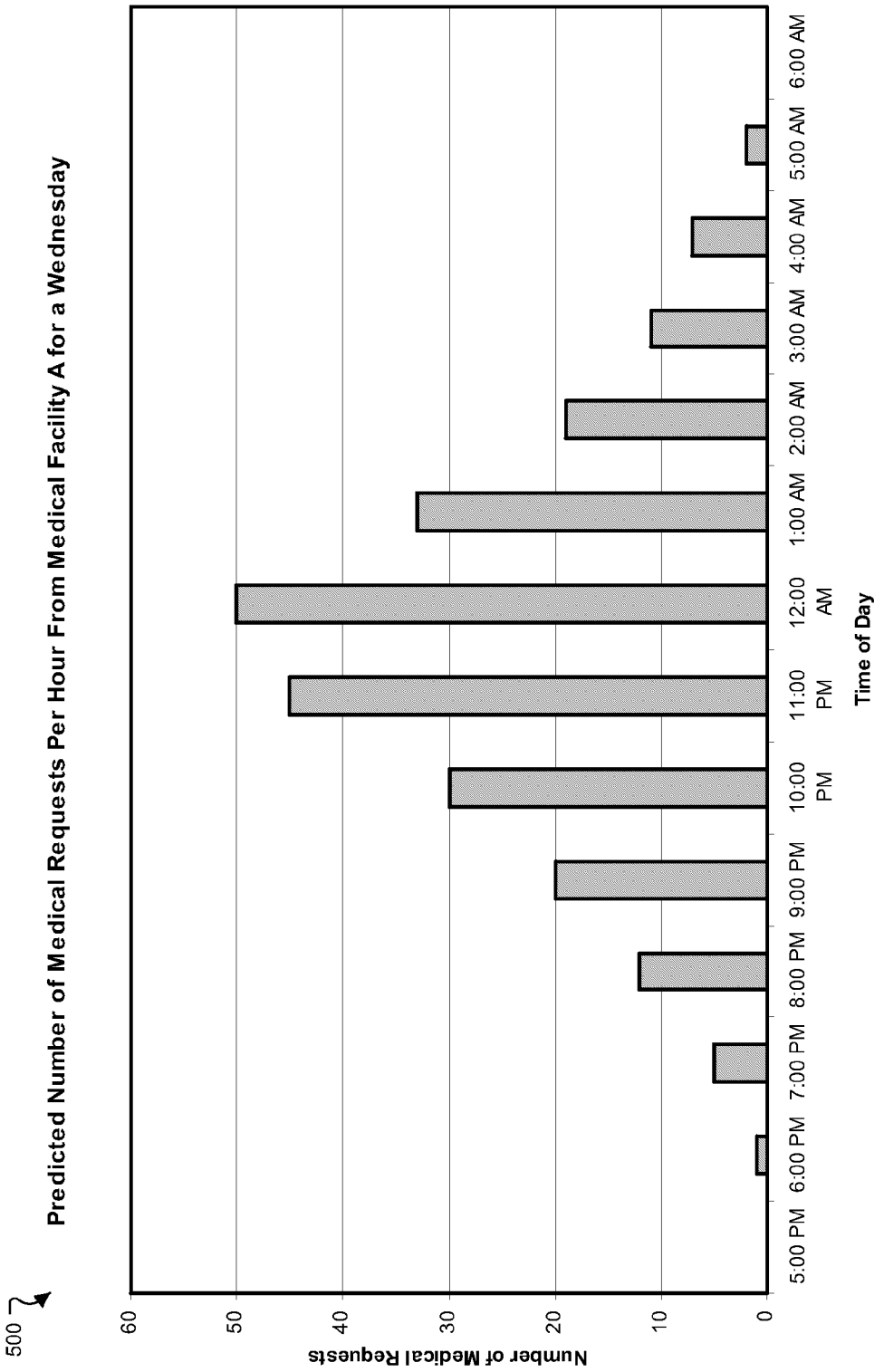
500
Predicted Number of Medical Requests Per Hour From Medical Facility A for a Wednesday
Number of Medical Requests
0
10
20
30
40
50
60
5:00 PM
6:00 PM
7:00 PM
8:00 PM
9:00 PM
10:00 PM
11:00 PM
12:00 AM
1:00 AM
2:00 AM
3:00 AM
4:00 AM
5:00 AM
6:00 AM
Time of Day

FIG. 5

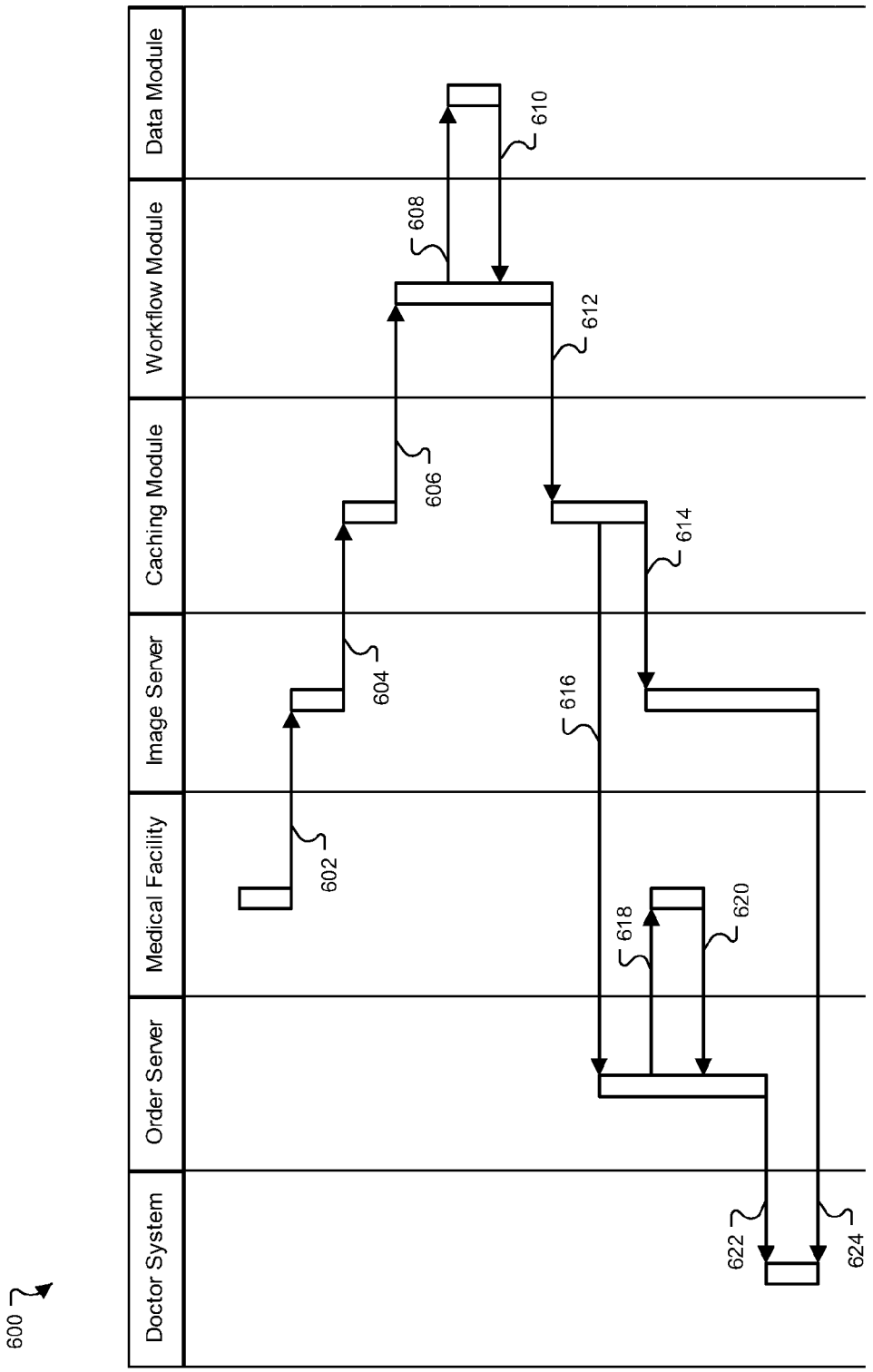
600
Doctor System
Order Server
Medical Facility
Image Server
Caching Module
Workflow Module
Data Module
602
604
606
608
610
612
614
616
618
620
622
624

FIG. 6

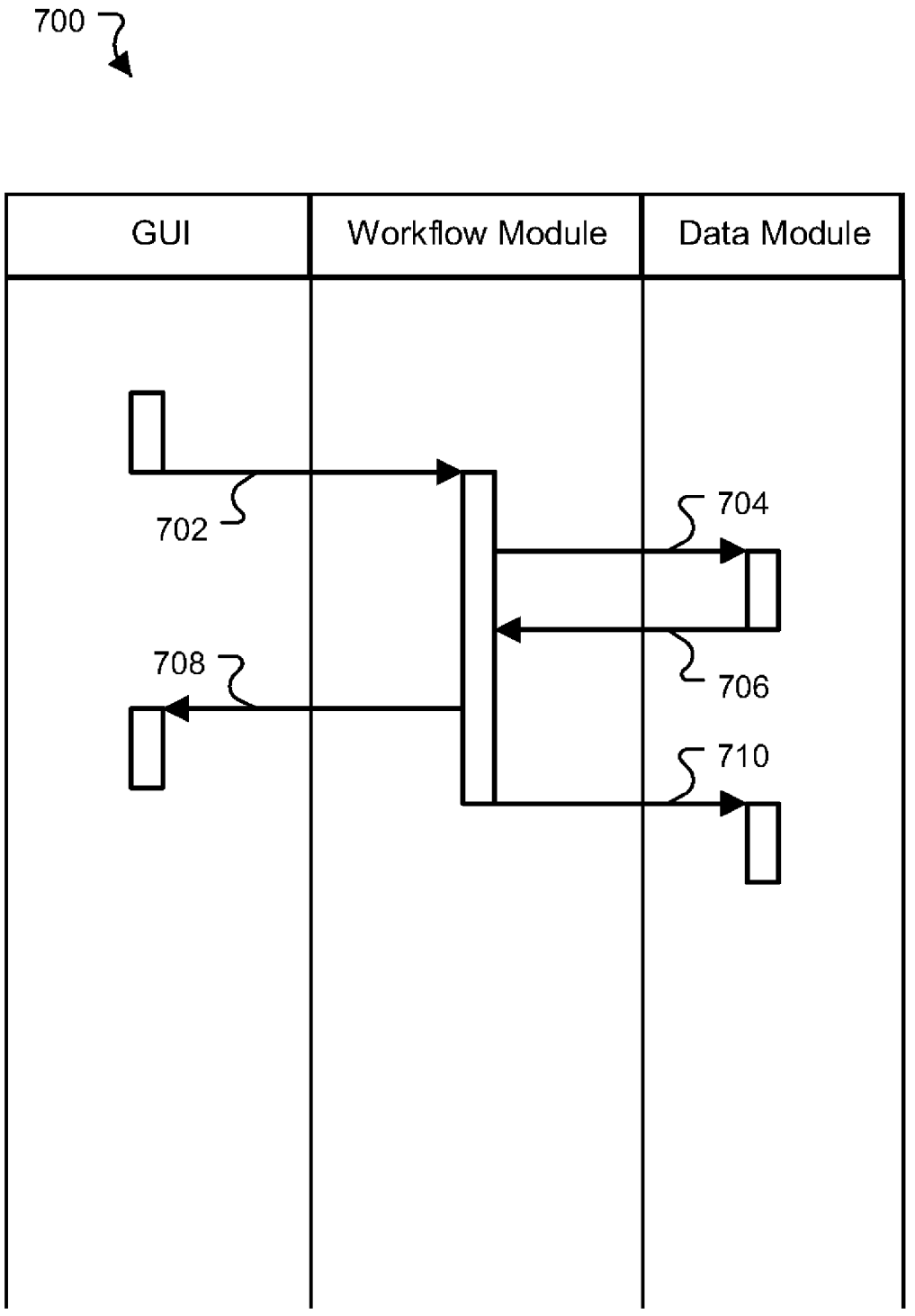

FIG. 7

MULTIPLE RESOURCE PLANNING SYSTEM

CROSS REFERENCE TO RELATED CASES

This application is a continuation of prior U.S. patent application Ser. No. 12/783,073 filed May 19, 2010 and entitled "Multiple Resource Planning System", which is a continuation of prior U.S. patent application Ser. No. 11/288,645 filed Nov. 28, 2005 and entitled "Multiple Resource Planning System", which claims the benefit of U.S. Provisional Patent Application Nos. 60/656,215, filed Feb. 25, 2005 by Backhaus and entitled "Automated Credentialing and Licensing System"; 60/682,052, filed May 17, 2005, by Backhaus et al. and entitled "Integrated Caching Environment with Order Form Pre-population"; 60/694,880, filed Jun. 29, 2005, by Backhaus et al., and entitled "Medical Data Management Method and System"; 60/699,119, filed Jul. 14, 2005, by Backhaus et al., and entitled "Medical Data Transfer System and Method"; 60/740,454, filed Nov. 28, 2005 by Backhaus et al., and entitled "Medical Data Transfer System and Method"; 60/740,589, filed Nov. 28, 2005 by Casey et al. and entitled "Remote Scanning System and Method"; and 60/740,527, filed Nov. 28, 2005 by Casey et al. and entitled "Patient Information Translation Method and System"; the entirety of all of the preceding applications are incorporated herein by reference.

BACKGROUND

Medical images, such as X-rays, CAT (computerized axial tomography) scans, and MRI's (Magnetic Resonance Imaging), may be digitized to facilitate remote reading by doctors at remote locations. A hospital may use systems that capture and digitize the images and transmit them to a remote image server, such as a Picture Archiving and Communications System (PACS). The transmission may occur over a network, such as an intranet or the Internet.

Additionally, the hospital may also transmit orders corresponding to the images to an order server, such as a Radiologist Information System (RIS). The orders may be requests for a doctor to interpret, or read, the images and return a diagnostic report. Orders may also contain information, such as a patient identifier, the procedure type associated with the image, patient demographic information, and a hospital identifier.

Some systems route the images and orders to doctors in a fixed manner. For example, all of the images and orders may be transmitted from the scanning area of a hospital to a set of doctors that work in the radiology department of the same hospital. The doctors may be at the hospital or at remote systems. Other systems route the images and orders to doctors based on data included in the image headers, such as information about the body area that is scanned. For example, if the image header includes information that specifies that the image is a head scan, the image and the associated order may be transmitted from the scanning area of the hospital to doctors that work in the neurology department of the hospital instead of to doctors that work in the urology department.

After receipt of the images and orders, the radiologist may analyze the image and return the diagnostic report using the remote system. The diagnostic report may be transmitted through the network to the order server, which may send the report to the hospital or other medical facility that originally transmitted the order and images corresponding to the report.

Synapse from FUJIFILM Medical Systems, Stamford, Conn. allows doctors to subscribe to a folder on a PACS. When new content arrives in that folder, a doctor receives notification that the content has arrived. The new content may be cached or stored on the doctor's remote system for viewing.

SUMMARY

A system for managing remote doctor medical request workflow may include a workflow module that optimizes assignments of medical requests to remote doctors based on parameterized doctor and scheduling information and may further include a forecasting module that predicts the hospital credentials, state licenses or doctors needed to fulfill a projected volume of future medical requests. In one embodiment, radiologists are parameterized and then matched with requests for radiological readings based on information extracted from DICOM image headers and merged with associated information contained in a medical work order. In this embodiment, the radiologists are parameterized based on their locations, schedules, hospital credentials, state licensing, compensation metrics, and performance metrics and incoming requests for review of CT scans and the like are filtered based on the parameterized radiologist information to identify one or more radiologists who are to fulfill the medical request. In other embodiments, the system forecasts a shortfall or excess in the number of hospital credentials, state licenses, or radiologists needed to fulfill a projected future volume of medical requests based on workflow assignment parameters that include radiologist work schedules, expected licensing approvals, expected credentialing approvals, medical facility preferences for certain doctors, radiologist contract terms, radiologist compensation metrics, historical radiologist performance metrics, and additional medical facilities to be serviced during the future time period.

BRIEF DESCRIPTION OF THE DRAWINGS

FIG. **1** is an exemplary block diagram of a system for assigning medical requests to doctor systems.

FIG. **2** is a block diagram of the system of FIG. **1** in more detail, according to one implementation.

FIG. **3** is a schematic diagram of tables used by a workflow module to assign medical requests.

FIG. **4** is an exemplary block diagram of a portion of an image order management system that predicts an amount and origin of future medical requests.

FIG. **5** is a graph showing an exemplary prediction from a prediction generator implemented at the image order management system.

FIG. **6** is a sequence diagram of exemplary operations that can be performed to assign medical requests to doctor systems.

FIG. **7** is a sequence diagram of exemplary operations that can be performed to predict an amount and origin of future medical requests.

Like reference symbols in the various drawings indicate like elements.

DETAILED DESCRIPTION OF ILLUSTRATIVE EMBODIMENTS

FIG. **1** shows an exemplary system **100** for assigning medical requests to doctor systems. Medical facilities transmit the medical requests to an Image Order (IO) management system **102**, which implements a workflow module that assigns the medical requests to selected doctors. The assignment may be based on several variables, such as whether the doctor is credentialed at the hospital, the doctor's schedule, the pref-

erence of the hospital for certain doctors, doctors' licensing status, compensation metrics, online status, geography, performance, and the complexity of previous medical requests that have been assigned to a doctor. After assignment, the IO management system transmits the requests to the assigned doctor.

To implement the medical request assignment, the system **100** includes an IO management system **102**, a medical facility **104**, and doctor systems **106**A-C. The IO management system **102** performs operations to route medical requests from medical facilities, such as the medical facility **104**, to one or more of the doctor systems **106**A-C. The I0 management system **102** receives a medical request **108**, which includes a medical facility identifier (ID) **110**, from the medical facility **104**. The medical facility ID **110** is associated with the medical facility **104** from which the medical request **108** originated.

A data module **112** within the IO management system **102** stores doctor information **114** including a doctor identifier, doctor schedule information, an order volume, a doctor classification composite metric, doctor location information, preference information, performance information, and contract terms (shown in a FIG. **3**). For example, a doctor may be identified within the data module **112** by a doctor ID. A doctor's schedule information may include times and dates that a doctor is scheduled to be available for reviewing medical requests. A doctor's order volume may indicate the number of medical requests that a doctor is capable of completing in a given period of time. A doctor's location may determine whether the doctor is allowed to review certain medical requests (e.g. doctors outside the United States may not be allowed to perform a final review of medical images). A medical facility's request for or refusal of a particular doctor may be indicated in the doctor preference information. A doctor's performance may be indicated by the accuracy of the doctor's reports or the satisfaction of medical facilities for which the doctor has reviewed medical requests. The contract terms of a doctor may specify a quota of medical requests the doctor is paid for regardless of the number of medical requests the doctor actually reviews. The contract terms may also specify a bonus rate for medical requests above the quota that are reviewed by the doctor.

A doctor's classification composite metric may be a combination of the doctor's compensation, either per medical request or a salary, and the contract terms of the doctor. In one implementation, a doctor compensated on a per-medical request basis has a lower priority than a doctor that has a quota that has not yet been met. A doctor receiving higher bonus compensation than another doctor would have a lower priority than the other doctor when the two doctors have both reached their quotas. The classification composite metric reduces the overall cost of reviewing a set of medical requests while taking into consideration doctor compensation and doctor contractual terms.

A workflow module **116** receives the doctor information **114** and uses it along with the medical facility ID **110** to filter the medical request **108**. In filtering the medical request **108**, which is described in greater detail in association with FIGS. **2** and **3**, the workflow module **116** identifies a doctor to receive the medical request **108**. The IO management system **102** transmits the medical request **108** to the doctor system **106**A, which is accessible by the doctor identified during the filtering of the medical request.

To filter the medical request **108**, the workflow module **116** transmits the medical facility ID **110** to the data module **112**. The data module **112** uses the medical facility ID **110** to access and transmit the doctor information **114** associated with the medical facility ID. For example, the data module **112** may use the medical facility ID **110** as a key in a database table to locate all the doctors credentialed at a hospital specified by the medical facility ID **110**. In this implementation, the data module **112** performs a first pass filter by providing to the workflow module **116** the doctor information **114**, which contains a list of doctors credentialed at the medical facility **104**. In another implementation, the returned list of doctors may be a subset of all the doctors credentialed at the medical facility **104**. For example, the data module **112** may only return a list of credentialed doctors that are scheduled to work (as indicated by the doctor scheduling information stored in the data module **112**) when the medical facility ID **110** is received by the data module **112**.

FIG. **2** shows the system **100** of FIG. **1** in more detail according to one implementation. Within the IO management system **102**, an image server **202** and an order server **204** receive images and orders, respectively, from the medical facility **104**. The image server **202** and the order server **204** send the images and the orders to the doctor systems **106**A-C for review by the doctors. An access control module **206** provides secure access to the IO management system **102** from the medical facility **104** and the doctor systems **106**A-C.

As shown in FIG. **2**, the medical facility **104** sends a medical request comprising DICOM images **208** to the IO management system **102**. The image server **202** receives the DICOM images **208**. The image server **202** may be part of a Picture Archive Communication System (PACS), which digitally stores, transmits, and displays medical images. The image server **202** may store the images as images **210**. A DICOM processor **212** extracts DICOM data from the images and stores the DICOM data associated with the images in a database **214**. The images are assigned an identifier that is stored in the database **214** and is used to access the images when needed for transmission or other purposes. When received, a compressor (not shown) may compress the images using a variety of compression algorithms to compress the images, such as JPEG, JPEGLS, JPEG2000, PNG, GIF, XBM, BMP, and TIFF.

The compressor may be implemented on the same computing device as the image server **202**. In one implementation, the image compressor may be accessible by the software that executes the functions of the image server **202**. For example, the image compressor may be a dynamic load library (dll) code segment stored on the same computing device and accessed by the image server **202**. Alternatively, the compressor may be implemented on a separate computing device from the image server **202**. For example, the compressor may be accessible to software that executes the functionality of an Internet server, which is resident on a separate machine from the image server **202**. The Internet server may access the compressor whenever it receives images from the image server **202** for transmission to the network.

Additionally, the database **214** and the images **210** may be stored at the image server **202**. For example, the images and database may be stored on same machine that executes the image server software. This may simplify the operation and maintenance of the software. Alternatively, the images and database may be stored on a different machine from the image server. For example, the database may be installed on its own machine that has increased security protections and is isolated from the network in order to protect the medical data stored in the database. Similarly, the images may be installed on a separate machine that provides more storage capacity and specialized hardware that facilitates quick and efficient retrieval and storage of the images. After the workflow module assigns the orders and corresponding images to the

selected doctors, the image server **202** may transmit the compressed images over the network to the doctor systems **106**A-C.

A comparator module **216** receives extracted DICOM data **218** and database data **220** from the image server **202**. The image server extracts the original DICOM data from the images **210** again and transmits it to the comparator module **216** for comparison with the database data **220**. The comparison is used to determine if the DICOM processor **212** stored the extracted data correctly and under the correct patient name. For example, if the medical facility ID **110** provided by the medical facility **104** is not unique within the database **214** the workflow module **116** may be unable to provide the correct ID to the data module **112** to filter the medical request. In addition, if a patient name included in the database data **220** and associated with the medical request does not match a patient name specified in the DICOM data **218**, then the medical request may be incorrectly associated with the patient. If the medical request is incorrectly associated, then the comparator module **216** sends an unidentified order **222** to the order server **204** for correction. Otherwise, the comparator module **216** provides the medical facility ID **110** derived from the DICOM data included in the medical request to a caching module **224**.

The caching module **224** caches information related to the medical request. The caching module **224** transmits the medical facility ID **110** to the workflow module **116**. The workflow module transmits the medical facility ID **110** to the data module, which uses the facility ID **110** to access doctor information for doctors credentialed at a medical facility specified by the facility ID. The data module **112** then returns the doctor information to the workflow module **116**. Additionally, the data module may return medical facility information **248**, such as how many medical requests per day the facility is contracted to request. The workflow module then performs filtering algorithms to determine a doctor to receive the medical requests and returns an associated doctor ID **226** to the caching module. The specific filtering methods used by the workflow module **116** will be described in more detail below. The caching module **224** sends the identified doctor ID **226** to the image server **202**. The image server **202** places the images included in the medical request in file folders, or directories, which are associated with the identified doctor ID **226**. The caching module **224** generates a pre-populated order **228** using the extracted DICOM data **220** and sends the pre-populated order **228** to the order server **204**. The pre-populated order may be an order for a medical service, such as a request to read radiology images that is pre-populated with patient and hospital information, such as the hospital and patient name.

The order server **204** sends the pre-populated order **228** to the medical facility **104**. The medical facility **104** validates the information contained in the pre-populated order **228** and sends the validated order **230** to the order server **204**. For example, staff at the medical facility **104** may check the pre-populated information for correctness and specify a number of images included in the medical request, a reason for the medical request, and a medical history of the patient. The order server **204** sends the validated order **230** to the caching module **224**.

Unidentified orders **222** may also be corrected and then transmitted to the caching module **224**. For example, personnel at the medical facility **104** may contact an operator with access to the order server. The medical facility personnel may provide the correct patient identification and other necessary information to correct the unidentified order **222**. The operator may then correct the order **222**, and the corrected order is transmitted to the caching module **224** as an identified order **232**.

In another implementation, the unidentified orders **222** are corrected by transmitting a pre-populated order **228** to a "best guess" medical facility for confirmation. For example, the DICOM information associated with the unidentified order **222** may be used to generate a pre-populated order that includes the patient's name and other extracted information. If the originating facility is uncertain, the order server **204** may use fuzzy logic to determine the medical facility with the highest probability of being the originating facility. The order server may then transmit the pre-populated form with the patient information for confirmation. If the order server determines that more than one medical facility matches information from the DICOM header, the order server may send a pre-populated form to all the matching medical facilities. The confirmed order may then be transmitted to the caching module **224**.

As images included in a medical request are received, the caching module **224** queries the image server **202** to determine if the correct number of images have been received, as indicated by arrow **234**. If there are either too few or too many images received, then the caching module **224** refers the medical request to an operations unit **236** where the image count is corrected, as indicated by arrow **238**. In one implementation, the image count is manually corrected by an operator that may contact personnel at the medical facility to inquire about the image count. When the image count is correct, the caching module **224** sends to the order server **204** an auto-arrived alert **240**, and the order associated with the received medical images is placed in the doctor work list **246** associated with the doctor assigned to review the medical request.

The order server **204** sends the validated order **230**, which is in the doctor's work list **246**, to the order client **242** at the doctor system **106**A. The image server **202** transmits the images to an image client **244** at the doctor system **106**A. The doctor system **106**A is associated with the identified doctor ID **226** and it is accessible by the identified doctor. The doctor may then review the images **208** and the order **230** associated with the medical request. The doctor generates a report based on the review and the report is sent to the medical facility **104**, either directly or through the IO management system (not shown).

In filtering the medical requests, the workflow module **116** may use the doctor information **114** and the medical facility information received from the data module **112**.

FIG. **3** shows data tables **300** contained in the data module **112**. The data tables **300** include a list of medical facility IDs **302**, a list of doctor IDs **304**, the doctor information **114**, and the medical facility information **248**. Each medical facility ID is associated with a list of doctor IDs corresponding to doctors credentialed at that medical facility. Here, a first medical facility ID **306** is associated with the list of doctor IDs **304**, as indicated by arrow **308**. Each medical facility ID is associated with medical facility information. Here, the first medical facility ID **306** is associated with the medical facility information **248**, as indicated by arrow **310**. Each doctor ID is associated with doctor information. Here, the first doctor ID **312** is associated with the doctor information **114**, as indicated by arrow **314**.

The doctor information **114** may include data as described in association with FIG. **1**. The doctor information **114** may also include credentialing and subspecialty information. In one implementation, the workflow module **116** may use the credentialing, the subspecialty information, or both to filter

the medical requests. For example, a doctor that is not credentialed at the medical facility **104** will not be allowed to review medical requests from the medical facility **104**. A doctor having a subspecialty in a particular type of medical request, such as a review of a magnetic resonance imaging (MRI), will be selected over another doctor having similar information, but no subspecialty in MRI reviews. In another implementation, the data module returns the entire doctor list **304**. The entire list of doctors may be eligible to review the images because all doctors in the list **304** are credentialed at the medical facility associated with the facility ID **306**.

The medical facility information **248** includes schedule information, location information, or both. The workflow module **116** may use the medical facility schedule information, the medical facility location information, or both to filter the medical requests. For example, a medical request received from the medical facility **104** outside of its scheduled service time may be categorized as an unidentified order **222**, which prompts staff at the IO management system **102** to investigate the medical request. In another example, if the medical facility **104** is located within the United States and the medical request is a final reading of medical images, then a doctor located within the United States must be assigned to the medical request.

Referring again to FIG. **2**, the access control module may monitor a connectivity status **250** of the medical facility **104** or the doctor systems **106**A-C. The connectivity status **250** may indicate whether an encrypted network connection used by the medical facility **104** or the doctor systems **106**A-C is operational. The workflow module **116** may use the connectivity status **250** of the medical facility **104** or the doctor systems **106**A-C when filtering the medical requests. For example, the workflow module **116** may determine from the connectivity status **250** that the network connection to the doctor system **106**A is not operational. The workflow module **116** may prevent medical requests from being assigned to the doctor associated with the doctor system **106**A and assign the medical requests to the next doctor available based on the filtering rules.

The workflow module **116** may monitor the doctor work list **246** to determine the number of medical requests assigned to and not yet completed by the doctor. The workflow module **116** may use the number of incomplete medical requests to filter the next medical request. For example, a doctor with a high number of incomplete medical requests may have a lower chance of being assigned another medical request than a doctor with a low number of incomplete medical requests.

The DICOM images **208** may include information in DICOM headers, such as a patient age **252** and a body region **254**. The workflow module **116** may determine a complexity factor **256** of the medical request based on the patient age **252**, the body region **254**, and the medical facility ID **110**. For example, an image depicting a head or a chest may be more difficult for a doctor to review than an image depicting a forearm or leg. In addition, a medical request for a patient less than two years of age or over 75 years of age may be more difficult to review than a medical request for a patient that is 25 years old. Also, some medical facilities associated with a medical facility ID **110** may consistently transmit complex or difficult medical requests. Some or all of these factors may be combined to generate the complexity factor **256**.

In one implementation, the workflow module **116** assigns weights to each of the components used to calculate the complexity factor **256**. The weights may range from −1 to 1, with −1 being associated with less complexity and 1 with more complexity. For example, a patient that is 72 years old may have a weighting of 0.9, which indicates the case is more complex. In contrast, a 30 year old patient may have a weighting of −0.9, which indicates the case is less complex. The complexity factor may be the sum of the weightings for each component.

The workflow module **116** may use the complexity factor **256** to prevent a doctor from accepting only those medical requests that are easy. If the average complexity of the medical requests in the doctor work list **246** is low, then the workflow module **116** may assign only complex medical requests to the doctor until the average complexity of the doctor work list **246** meets a threshold. Similarly, if a doctor has accepted several complex medical requests, the workflow module may assign requests with a lower complexity factor to that doctor.

In one implementation, the threshold may be a single number that is compared with the sum of all the complexity factors. For example, a doctor may accept three difficult cases, each with a complexity factor of 2.9, and five simple cases, each with a complexity factor of −0.7. This means that the doctor has a complexity total of 5.2. If the threshold is 10, the workflow module may assign the doctor difficult cases until the threshold is met. If the threshold is exceeded, the workflow module may assign the doctor simple cases until the complexity total reaches or comes within a predefined range of the threshold. In another implementation, the threshold may be a number of studies that exceed a defined complexity factor. For example, if the doctor accepts four cases per hour with complexity factors over 2.5, the workflow module will assign simpler cases with complexity factors under −1.2 to the doctor until the hour is over.

In one implementation illustrating how the workflow module **116** obtains and uses the doctor information and the medical facility information to filter requests, the medical facility **104** sends images to the image server **202**. The images include DICOM header information recording the patient's age, the body region with which the images are associated, and the medical facility ID.

The image server **202** extracts the DICOM information listed above and transmits it to the workflow module **116**. The workflow module transmits the medical facility ID to the data module **112**, where it is used to locate an entry that matches the facility ID. The matching entry may have a list of doctor identifiers that are credentialed at the medical facility specified by the medical facility ID. The doctor identifiers, in turn, may have doctor information, such as schedule information, volume information, performance information, and a complexity total, associated with each doctor identifier's entry. The data module **112** may then return to the workflow module the doctor identifiers of the doctors credentialed at the identified hospital and the associated doctor information.

The workflow module may then begin the filtering process with a first of several rules that are applied to determine which doctor to assign the medical requests to for review. For example, the first filter rule may determine which of the credentialed doctors is available to accept medical requests using the doctors' schedule information, which indicates the doctors that are currently on-call to accept requests.

Then the workflow module may apply a second rule that determines which of the on-call doctors have a functioning network connection to the IO management system **102**. The on-call doctors that are currently connected (as monitored by the workflow module) will remain in a pool of doctors eligible to receive the medical request, while the doctors that are not actively connected are eliminated from the pool.

The next rule may consider the volume of medical request the doctors have currently accepted, but not completed (as indicated by the volume information received from the data module). In one implementation, the doctors with the least

volume will be favored with a weighting factor over doctors with higher volume. For example, the workflow module may assign a weighting factor that favors doctor A over doctor B if doctor A has four accepted but incomplete medical requests, and doctor B has five accepted but incomplete medical requests.

The next filter rule may consider performance of the doctors, such as the average time it takes from acceptance to completion of a request (as indicated by the performance information received from the data module). In one implementation, the doctors with the shortest performance times are favored over doctors with longer performance times. In another implementation, the filter rule may be used in cooperation with the volume filter rule to determine a weighting for each doctor. If doctor A has a volume of four, and doctor B has a volume of five, the workflow module may still assign a weighting that favors doctor B over doctor A because doctor B has performance information that indicates doctor B will complete the medical requests in less time than doctor A. For example, if doctor A can complete four medical requests in an hour, but doctor B completes five medical requests in 50 minutes, doctor B is assigned a favored weighting because doctor B will be ready to review another medical request before doctor A, despite the fact that doctor B as more medical requests.

Additionally, the workflow module may implement a complexity filter that calculates a complexity factor for the medical request and assigns a weighting that favors or disfavors a doctor depending on the doctor's complexity total, which reflects the complexity of the cases that the doctor has accepted in the past. The workflow module may calculate the complexity factor for the medical request in a manner similar to the manner described above. The workflow module compares the doctor's complexity total to a threshold value, which is also described above. The workflow module then assigns a weight favoring or disfavoring each doctor depending on whether the doctor's complexity total reaches a threshold value and whether the medical request to be assigned is complex or simple as determined by the workflow module.

For example, the workflow module determines that the medical request is complex based on the age of the patient, the body region scanned, and the originating medical facility. The workflow module then determines that doctor A has not met the threshold, which indicates the doctor has not accepted enough difficult cases. The workflow module will then assign a weight favoring the assignment of the medical requests to doctor A over other doctors that have exceeded the threshold, which indicates these doctors have accepted more difficult cases than doctor A.

After the workflow module applies the filter rules, the module sums the weighting factors for each of the doctors remaining in the assignment pool. The workflow module then selects the doctor with the highest weighting to receive the medical request.

FIG. **4** shows a system **400** that may be included in the IO management system **102**. The system **400** is capable of predicting an amount and origin of future medical requests. This information, in turn, may be used to ensure enough doctors are available to handle the predicted number and type of medical requests. Additionally, the information may be used to identify if more medical requests are needed to fully utilize the predicted amount of doctors available to review the requests. The system **400** includes a graphical user interface (GUI) **402**, the workflow module **116**, and the data module **112**.

More specifically, a user uses the GUI **402** to enter an input that indicates a future time period **404** for the prediction. The indicator **404** may describe a particular date in the future. The workflow module **116** receives the future time period indicator **404**. The workflow module **116** queries the data module **112** using the indicator **404**. The data module returns medical facility information **248** and doctor information **114** associated with the future time period indicator **404**. The medical facility information **248** may include data describing all of the medical facilities that are scheduled to submit medical requests on the date and time in the future. The doctor information **114** may include data describing all of the doctors that will be online and scheduled to work on the date in the future. Here, the medical facility information **248** also includes historical medical request data **406**.

For example, the future time period indicator **404** may indicate a particular day of the week within the following week, such as next Wednesday. The data module **112** may return historical medical request data **406** information regarding medical requests received from each medical facility for the two previous Wednesdays. The data module **112** also returns the doctor information **114** and the other medical facility information **248** previously described for filtering medical requests.

A prediction generator **408** in the workflow module **116** may use the historical medical request data **406** to generate a prediction for the amount and origin of medical requests occurring during the future time period. The prediction may indicate the average number of medical requests received per hour from a particular medical facility on a particular day of the week.

In another implementation, the prediction generator **408** uses contractual information associated with each of the medical facilities to generate the prediction. For example, the prediction generator may use an indicator specifying a future time period to determine what facilities are contractually obligated to submit requests during the period. The generator may transmit the indicator to the data module **112**, which returns the medical facility IDs of facilities scheduled to submit request and the information associated with the medical facilities including contract terms. The generator may create a prediction based on how many requests each medical facility has contracted to submit.

The allocation may be an approximately equal division of requests per hour. For example, if a medical facility is contracted to submit 40 medical requests on a day specified by the indicator, the generator may allot a portion of the requests to each hour that the medical facility is contracted to submit requests (e.g., 5 requests allocated to 7 PM, 5 requests to 8 PM, etc.). Alternatively, the generator may allocate the requests on a bell curve model so that fewer of the requests are allocated near the beginning and the end of the scheduled submission hours, and more requests are allocated during the intermediate hours.

As shown in FIG. **5**, the prediction generated by the prediction generator **408** may be illustrated using a graph **500** including the number of medical requests per hour from a particular medical facility for a particular day of the week. Here, the graph **500** shows the number of medical requests per hour from Medical Facility A for the two previous Wednesdays. Based on the historical medical request data **406** for Medical Facility A, one can see that on average Medical Facility A begins to send medical requests at 6:00 PM. The number of medical requests from Medical Facility A peaks at 12:00 AM and Medical Facility A no longer sends medical requests after 5:00 AM on the morning after a Wednesday.

Referring again to FIG. **4**, the workflow module **116** assigns the future medical requests to doctors in a similar manner as described in FIGS. **1** and **2**. Each predicted medical

request is processed as if it had been received by the IO management system **102**. The workflow module **116** may use the doctor information **114**, including doctor performance information, such as turnaround time for reviewing medical requests, to determine how long a medical request should remain in a doctor's work list. New medical requests may be added to the doctor's work list based on the doctor's historical rate of the fulfilling medical requests.

In some implementations, the medical facility information **248** is associated with medical facilities that are not yet active within the system **100**. The prediction generator **408** may use information within the medical facility information **248**, such as the date that a medical facility will become operational within the system **100**, to make its prediction. If the future time period occurs after a new medical facility will become active, then the prediction generator **408** may use an average of the other medical facilities to determine the number of medical requests the medical facility is likely to transmit. The prediction may indicate an average number of requests generated in the past by a typical medical facility during the indicated time period. For example, a medical facility may be scheduled to send medical requests for the first time during the indicated time period. In this situation, the medical facility will not have a set of past medical requests which the prediction generator **408** may use to generate a prediction. To mitigate this problem, the prediction may be based on an average of the number of combined medical requests submitted by other medical facilities during the indicated time period. For instance, if 5 hospitals send 40 requests at 7 PM last Wednesday, then the average for last Wednesday would be 8 requests at 7 PM. The prediction based on the average requests submitted by the other facilities serves as a substitute when historical information for requests is not available for a particular medical facility.

In some implementations, the workflow module **116** recursively reassigns the future medical requests to the doctors until the assignments produce an optimal assignment. The workflow module **116** may determine the optimal assignment based on whether a value associated with assignment is below a threshold or within a defined tolerance range. A particular set of choices for doctor assignments may result in one or more medical requests that cannot be assigned to a doctor. For example, a medical request from Medical Facility A may remain unassigned if the only doctor scheduled to work during that time who is credentialed at Medical Facility A already has a full work list. The workflow module **116** may go back and reassign the medical requests. During the reassignment, the workflow module **116** may make a different choice regarding medical requests assigned to the doctor credentialed at Medical Facility A.

A reiterative assignment process may continue until a threshold is met. For example, the threshold may be that zero medical requests are left unassigned. The assignment process will go through multiple iterations until a state is reached where all the medical requests are assigned. Alternatively, the reiterative assignment process may continue until a certain number of iterations have been performed. After this number is reached, the state with the lowest number of unassigned medical requests may be selected, and a recommendation (discussed in greater detail below) may be generated that informs a user what actions the user needs to take to avoid unassigned medical requests, such as hire a doctor credentialed at the hospital or hospitals with the unassigned request or requests.

In some implementations, the workflow module **116** generates recommendations **410** that may be based on the predictions. For example, if attempts at reassignment identify predicted medical requests that can not be assigned because doctors are not available to review the requests from a particular medical facility, then the workflow module **116** may recommend that more doctors be credentialed at the medical facility. If there are not enough doctors to review all of the medical requests even if the active doctors are credentialed at facilities with unassigned medical requests, then the workflow module **116** may recommend that more doctors be hired. If the work lists of doctors are consistently low, then the workflow module **116** may recommend that more medical facilities be recruited for the system **100**.

In addition, the workflow module **116** may recommend that the integration of new doctors be delayed if the workflow module makes predictive assignments that indicate active doctors do not have enough medical requests to review. For example, if the predicted assignments indicate that each of the existing doctors is only assigned 45 medical requests in a shift, the workflow module may recommend that new doctors should not be allowed to enter the system until the existing doctors are each assigned 55 medical requests in a shift. Similarly, the workflow module **116** may recommend that new medical facilities be delayed if the workflow module generates predictive assignments that indicate active doctors have too many medical requests to review. For example, if the predicted assignments indicated that each of the doctors is assigned 100 medical requests in a shift, the workflow module may recommend that new medical facilities should not be allowed to enter the system until more doctors are hired.

In some implementations, the workflow module **116** stores and uses the previously predicted assignments when the future time period occurs. The workflow module **116** may use the predicted sequence of medical request assignments as a starting point when assigning medical requests in real-time. If the predicted assignment does not apply or is invalid based on the current state of the system **100**, the workflow module **116** may revert to the filtering rules as described in FIGS. **1** and **2**. For example, when a medical request is received by the IO management system, the workflow module may make an assignment based on the stored predicted assignment without reapplying any of the filtering rules. If the current state of the system **100** is different from the predicted state of the system (e.g., one of the on-call doctors is not currently connected, an additional hospital is submitting medical requests, etc.), then the workflow module **116** uses the filter rules to make new assignments instead of using the predicted assignments.

FIGS. **6** and **7** are sequence diagrams illustrating exemplary methods **600** and **700**, respectively, for assigning medical requests to doctor systems and predicting future medical requests, respectively. Generally, the following description focuses on the operation of the IO management system **102** within the system **100**. However, the operations contemplate using any appropriate combination and arrangement of logical elements implementing some or all of the described functionality.

FIG. **6** shows an exemplary sequence of operations **600** that the system **100** can perform to assign medical requests to doctor systems. The operations **600** begin with the medical facility **104** sending a medical request, such as the DICOM images **208**, as indicated by arrow **602**. The image server **202** within the IO management system **102** receives the DICOM images **208**.

The image server **202** stores the DICOM images **208** and extracts DICOM data **218** from the DICOM images **208**. The extracted DICOM data **218** is stored in a database **214**. As more images in the medical request are received, the database data **220** is compared to the raw (not yet stored in database **220**) extracted DICOM data **218**. If they do not match, then

the medical request is invalid and the image server **202** sends the unidentified order **222** to the order server **204**. Otherwise, the DICOM images **208** are sent to the caching module **224**, as indicated by arrow **604**.

The caching module **224** sends the medical facility ID **110** contained in the DICOM images **208** to the workflow module **116**, as indicated by arrow **606**. The workflow module **116** uses the medical facility ID **110** to query the data module **112**, as indicated by arrow **608**.

The data module **112** returns the doctor information **114** to the workflow module **116**, as indicated by arrow **610**. The doctor information **114** may include a list of doctors and information associated with the doctors, such as the doctor's schedule, order volume, and contractual terms. The data module **112** may also return medical facility information **248**, such as a medical facility location and a medical facility schedule.

The workflow module **116** filters the medical request to assign a doctor to the medical request. The filtering may be based on doctor information **114** and medical facility information **248** as described in association with FIGS. **1** and **2**. In some implementations, the workflow module **116** may assign more than one doctor to a medical request or the workflow module **116** may later reassign the medical request. This double assignment and reassignment of medical requests decreases the probability that a request will remain incomplete for an unacceptable period of time.

For example, a backup doctor may always be assigned in addition to the normally assigned doctor or if a medical request is not completed in a certain amount of time, the workflow module **116** may reassign the medical request to another doctor or an additional doctor. For example, the workflow module may assign the medical request to doctor #1 and not to doctor #2. However, reassignment may include revoking the assignment of the medical request to doctor #1 and assigning the medical request to doctor #2. Alternatively, the reassignment may include assigning the medical request to doctor #2 as well as to doctor #1. The workflow module **116** sends the identified doctor ID **226** to the caching module **224**, as indicated by arrow **612**.

The caching module **224** creates a pre-populated order **228** using the extracted DICOM data **218**. The caching module **224** sends the identified doctor ID **226** to the image server **202** and the caching module **224** sends the pre-populated order **228** to the order server **204**, as indicated by arrows **614** and **616**, respectively.

The order server **204** sends the pre-populated order **228** to the medical facility **104**, as indicated by arrow **618**. The medical facility **104** validates the pre-populated order **228** and sends the validated order **230** to the order server **204**, as indicated by arrow **620**. The validation may include specifying a total number of images in the medical request, the reason for the medical request, and a medical history of the patient.

The order server **204** sends the validated order **230** to the caching module **224** where the expected number of images in the medical request is compared to the number of images received. If all of the images are received, the order server **204** places the validated order **230** in the work list **246** of the identified doctor and transmits the validated order **230** to the doctor system **106**A, as indicated by arrow **622**. The image server **202** places the DICOM images **208** in the doctor's directory associated with the identified doctor ID **226**. The image server **202** sends the DICOM images **208** to the doctor system **106**A, as indicated by arrow **624**.

Again, FIG. **7** is a sequence diagram that illustrates an exemplary method **700** for predicting future medical requests. The operations **700** begin with the user input of a future time period indicator, such as a day or week in the future. A user may make the input through the GUI **402**. The workflow module **116** receives the future time period indicator **404**, as shown by arrow **702**.

The workflow module **116** queries the data module **112** using the future time period indicator **404**, as indicated by arrow **704**. For example, the workflow module **116** may request, using the future time period indicator **404**, all of the historical medical request data **406** for a particular day. The historical medical request data **406** may include an indicator of all the medical requests sent by the selected medical facilities on the particular day in prior weeks, months, or years. The medical facilities are selected based on their schedules and their online status. A medical facility is selected if it is scheduled to submit medical requests and it is online during the future time period.

The data module **112** returns the historical medical request data **406** associated with the future time period indicator **404**, as indicated by arrow **706**. The data module **112** also returns the doctor information **114** and the medical facility information **248**, which is used by the workflow module **116** to assign the medical requests to a selected doctor.

The workflow module **116** uses the historical medical request data **406** to generate a prediction of an amount and origin of medical requests that will occur during the future time period. The workflow module **116** uses the assignment rules described in FIGS. **1** and **2** to assign all of the predicted medical requests for the future time period. The workflow module **116** may output recommendations **410** based on the assignments to a user of the GUI **402**, as indicated by arrow **708**.

The workflow module **116** may store the assignment information or the recommendations **410** in the data module **112**. The workflow module **116** may use the assignments, the recommendations **410**, or both when the future time period occurs.

A number of embodiments of the invention have been described. Nevertheless, it will be understood that various modifications may be made without departing from the spirit and scope of the invention. For example, in some implementations, the medical request **108** includes an image, an order, or both. The images may include representations of body parts, such as x-rays, computed tomography (CT) scans, and magnetic resonance imaging (MRI) scans. The images may also contain additional information, such as Digital Information in Communications and Medicine (DICOM) data. For example, the additional information may include the number of images in the transmission, the name of the patient, a name of the medical facility **104** and a name of a device within the medical facility **104** where the image was created. In some implementations, the medical facility ID **110** comprises the name of the medical facility and the name of the device that are contained in the information associated with the image.

In other embodiments, the medical request may comprise information or images in a format other than DICOM format. For example, the medical request may comprise images in CTI ECAT 7 image format, which originated from CTI Molecular Imaging, Inc. of Knoxville, Tenn. A processor may extract the ECAT 7 data from image headers and store the information in the database **214**. The processor may recognize the ECAT 7 file type by parsing the header and determining if a text string "MATRIX71" is at location 0 of the file. After the file is identified, information about the patient, such as name, age, and gender, may be extracted from the file along with additional information, such as the facility identifier.

The order may contain information about a patient, such as name, medical history, and the reason for creating the image.

The order may also include a description of an associated image, such as a pelvic abdominal scan, a number of images associated with the order, and an order type, such as preliminary or final read. The presence of the patient name and other patient information may enable a particular image to be linked with a particular order.

For example, a patient may come into the medical facility **104** with an injury or sickness and one or more images may be taken of the patient. This image may be obtained by an image data source in the medical facility **104** or it may be transferred to the image data source from another image capturing device. The image data source, in turn, may transmit the image to a computing device that sends it over a network to the IO management system **102**. The image data source may also directly send an image to the IO management system **102** instead of first transmitting it to the computing device. Medical facility personnel, such as a technician, may submit the order to a doctor or radiologist for reading the patient's images. The technician may enter the order into the computing device and send the order to the IO management system **102**.

Medical facilities may send images and orders at the same time as one another or at different times. For example, in some implementations, the medical facility **104** sends the order before the images. In these implementations, the pre-populated order is not transmitted by the order server **204** to the medical facility **104**, but the order is completed in full by personnel at the medical facility **104**.

Images, orders, and reports may be sent over the same network or different networks. For example, the IO management system **102** may receive images and orders through a single T1 or T3 connection to the Internet, or the images may be received from the Internet through a T1 or T3 connection and the orders may be received through a modem connection. In another example, the IO management system **102** may receive an image and an order from a medical facility over the Internet and return a corresponding report to the medical facility over a fax connection.

Additionally, the images and orders may be sent separately or combined in one transmission. For instance, a computing device at a medical facility may use software that sends the orders and the images with a single application and single set of actions, or the medical facility may send the images using one application that sends one transmission and send the orders using a different application that sends a separate transmission.

The IO management system **102** may be implemented on a single computing device or on multiple computing devices, such as a server farm. In one implementation, the IO management system **102** may be disbursed over several servers that are connected through a network. This configuration may be advantageous by facilitating expansion of the system and flexibility in managing the flow of received and output images and orders.

Additionally, the doctor system may contain more than one computing device. For instance, there may be one computing device that accepts the images, decompresses them, and displays the images for the doctor. The other computing device may handle receiving the orders, displaying them to the doctor for acceptance, receiving the report from the doctor, and transmitting the report to the IO management system **102**. The doctor may also not accept the order. For instance, if the doctor accessing the doctor system **106**A is currently viewing an order previously received, the doctor may not be able to accept another order until the previous order is completed. In this situation, a different doctor may accept the order at another doctor system, such as the doctor system **106**B. This is possible because the IO management system **102** may send the order to more than one doctor system. Once a doctor at one doctor system accepts an order, the IO management system **102** may remove the order from the other doctor systems.

In another embodiment, the prediction generated by the prediction generator **408** is based on long-term patterns, such as seasonality. The prediction may incorporate the average number of medical requests submitted by medical facilities during the month or week of the preceding years relative to the time period indicator. For example, if the indicator is for a day in December 2005, the generator may generate a prediction for this day using the average number of requests submitted daily by medical facilities in December 2004. Additionally, the generator **408** may weight this prediction using a growth factor, which accounts for growth in submitted medical requests. For example, the generator may determine based on historical data associated with medical requests that the average number of submitted requests has grown on average 27 percent a year for the past year. Applied to the previous example, this growth factor may be used to increase the seasonal prediction for December 2005 so that it is 27 percent higher than it was in December 2004.

In yet another embodiment, the prediction generator **408** may be used for scheduling. The generator may use the predicted medical requests to determine which doctors have the appropriate credentials to fulfill the predicted medical requests, and it may transmit a recommendation to a user that describes which doctors should be scheduled for which times. For example, if the prediction indicates that St. Mercy Hospital will submit 10 medical requests at 10 PM on Apr. 1, 2006, then the generator may recommend (or automatically schedule) that Doctor A, who is credentialed at St. Mercy, be scheduled to work at 10 PM on that day. Accordingly, other embodiments are within the scope of the following claims.

The features of the present invention described herein may be implemented in digital electronic circuitry, or in computer hardware, firmware, software, or in combinations thereof. For example, a computer program product designed to perform functions of the described implementations may be embodied in one or more computer readable medium(s) having computer readable program code embodied thereon; an apparatus such as a computing system with a processor and memory may embody components structured to perform functions of the described implementations; and method steps can be performed by a programmable processor executing a program of instructions to perform functions of the described implementations by operating on input data and generating output. The described features can be implemented advantageously in one or more computer programs that are executable on a programmable system including at least one programmable processor coupled to receive data and instructions from, and to transmit data and instructions to, a data storage system, at least one input device, and at least one output device. A program is generally a set of instructions that can be used, directly or indirectly, in a computer or other electronic programmable device to perform a certain activity or bring about a certain result. A computer program can be written in any form of programming language, including compiled or interpreted languages, and it can be deployed in any form, including as a stand-alone program or as a module, component, subroutine, or other unit suitable for use in a computing environment.

Suitable processors for the execution of a program of instructions include, by way of example, both general and special purpose microprocessors, and the sole processor or one of multiple processors of any kind of computer. Generally, a processor will receive instructions and data from a

read-only memory or a random access memory or both. The essential elements of a computer are a processor for executing instructions and one or more memories for storing instructions and data. Generally, a computer will also include, or be operatively coupled to communicate with, one or more mass storage devices for storing data files; such devices include magnetic disks, such as internal hard disks and removable disks; magneto-optical disks; and optical disks. Storage devices suitable for tangibly embodying computer program instructions and data include all forms of non-volatile memory, including by way of example semiconductor memory devices, such as EPROM, EEPROM, and flash memory devices; magnetic disks such as internal hard disks and removable disks; magneto-optical disks; and CD-ROM and DVD-ROM disks. The processor and the memory can be supplemented by, or incorporated in, ASICs (application-specific integrated circuits).

The features can be implemented in a computer system that includes a back-end component, such as a data server, or that includes a middleware component, such as an application server or an Internet server, or that includes a front-end component, such as a client computer having a graphical user interface or an Internet browser, or any combination of them. The components of the system can be connected by any form or medium of digital data communication such as a communication network. Examples of communication networks include, e.g., a LAN, a WAN, and the computers and networks forming the Internet.

The computer system can include clients and servers. A client and server are generally remote from each other and typically interact through a network, such as the described one. The relationship of client and server arises by virtue of computer programs running on the respective computers and having a client-server relationship to each other.

Although various representative embodiments of this invention have been described above with a certain degree of particularity, those skilled in the art could make numerous alterations to the disclosed embodiments without departing from the spirit or scope of the inventive subject matter set forth in the specification and claims.

What is claimed is:

1. A method for performing a radiology workflow with use of a radiology processing system, comprising:

receiving, with the radiology processing system, a radiological reading request from a medical facility, wherein the radiological reading request includes a medical facility identifier;

receiving, with the radiology processing system, parameterized doctor information data for a plurality of doctors, parameters within the doctor information data including one or more of a doctor identifier, doctor schedule information, a volume of uncompleted orders, a doctor classification composite metric, doctor location information, preference information, performance information, doctor compensation metrics, doctor subspecialty information, doctor credentialing information, and doctor contract terms;

generating, with the radiology processing system, a list of available doctors to receive the radiological reading request using the medical facility identifier and the parameterized doctor information data, the list of available doctors being identified from the plurality of doctors, including:

identifying doctors scheduled within the doctor schedule information, and

identifying doctors available to receive the radiological reading request from the radiology processing system at an associated client device via a network connection;

ranking, with the radiology processing system, the list of available doctors identified by the filtering, wherein the ranking includes factoring the volume of uncompleted orders pending for each in the list of available doctors and applying a preference for doctors having a low volume of uncompleted orders;

identifying, with the radiology processing system, a selected doctor having a highest ranking within the list of available doctors; and

transmitting, with the radiology processing system, the radiological reading request to the client device associated with the selected doctor.

2. The method of claim **1**, wherein doctor contract terms comprise radiological reading request minimums, and wherein the doctor compensation metrics comprise premiums for additional radiological reading requests fulfilled beyond a radiological reading request quota;

and wherein ranking the list of available doctors identified by filtering further comprises determining the radiological reading request quota for each in the list of available doctors and applying a preference for doctors currently below quota.

3. The method of claim **1**, wherein identifying doctors available to receive the radiological reading request at a client device from the radiology processing system via the network connection further comprises identifying a doctor connectivity status indicating whether the network connection used by the client device to receive the radiological reading request is encrypted and active.

4. The method of claim **1**, wherein the radiological reading request further comprises a patient age, a body region, or both; and wherein the ranking step further comprises:

identifying a complexity total for each in the list of available doctors and applying a complexity ranking factor to each doctor based upon the complexity total, wherein applying a complexity ranking factor comprises: comparing the complexity total to a complexity total threshold, calculating a complexity level for the radiological reading request, using the patient age, the medical facility identifier, the body region, or combination thereof, and comparing the complexity level to a complexity level threshold, wherein: when the complexity level is above the complexity level threshold, applying a preference for doctors having a complexity total below the complexity total threshold, and when the complexity level is below the complexity level threshold, applying a preference for doctors having a complexity total above the complexity total threshold.

5. The method of claim **4**, wherein calculating the complexity level for the radiological reading request comprises assigning an age complexity weight based upon the patient age, assigning a body region complexity weight based upon the body region, assigning a medical facility complexity weight based upon the medical facility identifier, and calculating a sum of the age complexity weight, the body region complexity weight, and the medical facility complexity weight.

6. The method of claim **4**, wherein the complexity total is calculated by a sum of complexity level of all radiological reading requests completed by each doctor within the list of available doctors during a set time period.

7. The method of claim 1, wherein the ranking step furthers comprise:

identifying the performance information for each in the list of available doctors, the performance information comprising an average completion time, a report accuracy rating, or a satisfaction rating; and applying a performance ranking factor to each doctor based upon the performance information.

8. The method of claim 1, wherein filtering step further comprises: identifying doctors credentialed and licensed to perforin a radiological read for a medical facility identified from the medical facility identifier.

9. The method of claim 1, further comprising: identifying a backup doctor;

associating the radiological reading request with the backup doctor; and upon determination that the selected doctor failed to complete the radiological reading request within a specified timeframe, transmitting the radiological reading request with the radiology processing system to a client device that is accessible by the backup doctor.

10. A method of forecasting resources used in connection with radiological reading requests, the method performed by a computing system, and the method comprising:

receiving identification of a future time period;

receiving data associated with previous radiological reading requests submitted by a plurality of medical facilities;

identifying a volume of previous radiological reading requests associated with each medical facility, the volume relating to a prior time period;

identifying a volume of future radiological reading requests expected to be received from the medical facilities during the future time period;

identifying one or more assignment parameters selected from the group consisting of doctor work schedules, expected licensing approvals, expected credentialing approvals, medical facility preferences for certain doctors, doctor contract terms, doctor compensation metrics, historical doctor performance metrics, and additional medical facilities to be serviced during the future time period;

identifying, using the doctor work schedules, a list of available doctors expected to be available during the future time period;

generating an optimized future schedule having a lowest number of unassigned radiological requests based on usage of doctors from the list of available doctors; and

implementing a radiology workflow during the future time period based on the optimized future schedule.

11. The method of claim 10, further comprising:

generating the optimized future schedule by locating the optimized future schedule from a set of proposed assignment schedules, including:

(a) assigning each of the volume of future radiological reading requests to one of the list of available doctors;

(b) creating a proposed assignment schedule based upon the assignments;

(c) determining a number of unassigned radiological reading requests associated with the proposed assignment schedule; and

(d) temporarily storing the proposed assignment schedule, wherein steps (a) through (d) are repeated for a plurality of iterations, each iteration including a different combination of doctors and radiological reading requests;

storing the optimized future schedule;

determining, at the beginning of the future time period, whether a list of available doctors corresponds to the doctor work schedules and a list of connected medical facilities corresponds to the plurality of medical facilities provided in the optimized future schedule; and

assigning one or more current radiological reading requests within the radiology workflow using the optimized assignment schedule responsive to the determination.

12. The method of claim 11, wherein assigning each of the volume of future radiological reading requests includes ranking the list of available doctors, the ranking comprising: determining a pending assignment volume for each in the list of available doctors and applying a volume weight for doctors having low pending order volumes; determining the radiological reading request quota for each in the list of available doctors and applying a quota weight for doctors currently below quota; combining the volume weight and the quota weight for each in the list of available doctors into a total weight value; and identifying a selected doctor based upon the total weight value.

13. The method of claim 10, wherein the prior time period is equal to length of the future time period and includes a same day or days of the week, a same month, or a same season as the future time period.

14. The method of claim 10, further comprising identifying a projected shortfall of radiological reading requests necessary to meet a threshold number of radiological reading requests per each of the available doctors, the threshold number included within the doctor contract terms.

15. The method of claim 10, wherein the volume of future radiological reading requests is determined in part on the volume of previous radiological reading requests weighted by a calculated growth factor.

16. The method of claim 10, wherein the volume of future radiological reading requests is determined in part on a number of contractually obligated radiological reading requests per medical facility.

17. The method of claim 10, further comprising determining, based on the optimized future schedule, a number of licenses, credentials, or doctors needed to fulfill the future radiological reading requests.

18. The method of claim 17, further comprising providing a hiring recommendation or a credentialing recommendation based upon the number of unassigned radiological reading requests.

19. The method of claim 17, further comprising providing a delay recommendation regarding an addition of a new medical facility or an addition of a new doctor.

20. The method of claim 10, wherein assigning the volume of future radiological reading requests includes allocating a predicted receipt time to each of the future radiological reading requests on a bell curve model.

21. The method of claim 10, wherein identifying a volume of future radiological reading requests expected to be received from the medical facilities during the future time period comprises: calculating an average number of radiological reading requests received from two or more medical facilities during the prior time period, and applying the average number to predict the volume of future radiological reading requests expected to be received from the additional medical facilities.

22. A system for distributing radiological reading requests to doctors, the system comprising:

at least one processor;

at least one memory operably coupled to the processor;

a data component operable with the at least one processor and at least one memory and configured for:

receiving a radiological reading request from a medical facility, wherein the radiological reading request includes a medical facility identifier;

receiving parameterized doctor information data for a plurality of doctors, parameters within the doctor information data including one or more of a doctor identifier, doctor schedule information, a volume of uncompleted orders, a doctor classification composite metric, doctor location information, preference information, performance information, doctor compensation metrics, doctor subspecialty information, doctor credentialing information, and doctor contract terms;

a workflow component operable with the at least one processor and at least one memory and configured for:

generating a list of available doctors to receive the radiological reading request using the medical facility identifier and the parameterized doctor information data, the list of available doctors being identified from the plurality of doctors, including:

identifying doctors scheduled within the doctor schedule information, and

identifying doctors available to receive the radiological reading request at an associated client device via a network connection;

ranking the list of available doctors identified by the filtering, wherein the ranking includes factoring the volume of uncompleted orders pending for each in the list of available doctors and applying a preference for doctors having a low volume of uncompleted orders;

identifying a selected doctor having a highest ranking within the list of available doctors; and

wherein the data processing component is further configured for performing a transmission of the radiological reading request to the client device associated with the selected doctor responsive to identification of the selected doctor.

23. A system for generating forecasts of future radiological reading request demand, the system comprising:

at least one processor;

at least one memory operably coupled to the processor;

a prediction generator operable with the at least one processor and at least one memory and configured to perform data calculations and generate an optimized future schedule based upon a future time period, wherein generation of the optimized future schedule comprises:

receiving identification of a future time period;

receiving data associated with previous radiological reading requests submitted by a plurality of medical facilities;

identifying a volume of previous radiological reading requests associated with each medical facility, the volume relating to a prior time period;

identifying a volume of future radiological reading requests expected to be received from the medical facilities during the future time period;

identifying one or more assignment parameters selected from the group consisting of doctor work schedules, expected licensing approvals, expected credentialing approvals, medical facility preferences for certain doctors, doctor contract terms, doctor compensation metrics, historical doctor performance metrics, and additional medical facilities to be serviced during the future time period;

identifying, using the doctor work schedules, a list of available doctors expected to be available during the future time period; and

generating the optimized future schedule to provide a lowest number of unassigned radiological requests based on usage of doctors from the list of available doctors.

* * * * *

UNITED STATES PATENT AND TRADEMARK OFFICE

CERTIFICATE OF CORRECTION

PATENT NO.	: 7,970,634 B2
APPLICATION NO.	: 12/882479
DATED	: June 28, 2011
INVENTOR(S)	: Brent Backhaus et al.

It is certified that error appears in the above-identified patent and that said Letters Patent is hereby corrected as shown below:

In column 19, line 1, In Claim 7, delete "furthers" and insert -- further --, therefor.

In column 19, line 11, In Claim 8, delete "perforin" and insert -- perform --, therefor.

Signed and Sealed this
Twenty-third Day of August, 2011

David J. Kappos

David J. Kappos
Director of the United States Patent and Trademark Office